AUTHENTICATED
U.S. GOVERNMENT
INFORMATION
GPO

FEDERAL REGISTER

Vol. 77 Thursday,
No. 139 July 19, 2012

Pages 42417–42620

OFFICE OF THE FEDERAL REGISTER

The **FEDERAL REGISTER** (ISSN 0097–6326) is published daily, Monday through Friday, except official holidays, by the Office of the Federal Register, National Archives and Records Administration, Washington, DC 20408, under the Federal Register Act (44 U.S.C. Ch. 15) and the regulations of the Administrative Committee of the Federal Register (1 CFR Ch. I). The Superintendent of Documents, U.S. Government Printing Office, Washington, DC 20402 is the exclusive distributor of the official edition. Periodicals postage is paid at Washington, DC.

The **FEDERAL REGISTER** provides a uniform system for making available to the public regulations and legal notices issued by Federal agencies. These include Presidential proclamations and Executive Orders, Federal agency documents having general applicability and legal effect, documents required to be published by act of Congress, and other Federal agency documents of public interest.

Documents are on file for public inspection in the Office of the Federal Register the day before they are published, unless the issuing agency requests earlier filing. For a list of documents currently on file for public inspection, see *www.ofr.gov.*

The seal of the National Archives and Records Administration authenticates the Federal Register as the official serial publication established under the Federal Register Act. Under 44 U.S.C. 1507, the contents of the **Federal Register** shall be judicially noticed.

The **Federal Register** is published in paper and on 24x microfiche. It is also available online at no charge at *www.fdsys.gov*, a service of the U.S. Government Printing Office.

The online edition of the **Federal Register** is issued under the authority of the Administrative Committee of the Federal Register as the official legal equivalent of the paper and microfiche editions (44 U.S.C. 4101 and 1 CFR 5.10). It is updated by 6:00 a.m. each day the **Federal Register** is published and includes both text and graphics from Volume 59, 1 (January 2, 1994) forward. For more information, contact the GPO Customer Contact Center, U.S. Government Printing Office. Phone 202-512-1800 or 866-512-1800 (toll free). E-mail, *gpo@custhelp.com.*

The annual subscription price for the **Federal Register** paper edition is $749 plus postage, or $808, plus postage, for a combined **Federal Register, Federal Register** Index and List of CFR Sections Affected (LSA) subscription; the microfiche edition of the **Federal Register** including the **Federal Register** Index and LSA is $165, plus postage. Six month subscriptions are available for one-half the annual rate. The prevailing postal rates will be applied to orders according to the delivery method requested. The price of a single copy of the daily **Federal Register,** including postage, is based on the number of pages: $11 for an issue containing less than 200 pages; $22 for an issue containing 200 to 400 pages; and $33 for an issue containing more than 400 pages. Single issues of the microfiche edition may be purchased for $3 per copy, including postage. Remit check or money order, made payable to the Superintendent of Documents, or charge to your GPO Deposit Account, VISA, MasterCard, American Express, or Discover. Mail to: U.S. Government Printing Office—New Orders, P.O. Box 979050, St. Louis, MO 63197-9000; or call toll free 1-866-512-1800, DC area 202-512-1800; or go to the U.S. Government Online Bookstore site, see *bookstore.gpo.gov.*

There are no restrictions on the republication of material appearing in the **Federal Register.**

How To Cite This Publication: Use the volume number and the page number. Example: 77 FR 12345.

Postmaster: Send address changes to the Superintendent of Documents, Federal Register, U.S. Government Printing Office, Washington, DC 20402, along with the entire mailing label from the last issue received.

SUBSCRIPTIONS AND COPIES

PUBLIC

Subscriptions:

Paper or fiche	**202–512–1800**
Assistance with public subscriptions	**202–512–1806**
General online information	**202–512–1530; 1–888–293–6498**

Single copies/back copies:

Paper or fiche	**202–512–1800**
Assistance with public single copies	**1–866–512–1800 (Toll-Free)**

FEDERAL AGENCIES

Subscriptions:

Paper or fiche	**202–741–6005**
Assistance with Federal agency subscriptions	**202–741–6005**

FEDERAL REGISTER WORKSHOP

THE FEDERAL REGISTER: WHAT IT IS AND HOW TO USE IT

FOR: Any person who uses the Federal Register and Code of Federal Regulations.

WHO: Sponsored by the Office of the Federal Register.

WHAT: Free public briefings (approximately 3 hours) to present:

1. The regulatory process, with a focus on the Federal Register system and the public's role in the development of regulations.
2. The relationship between the Federal Register and Code of Federal Regulations.
3. The important elements of typical Federal Register documents.
4. An introduction to the finding aids of the FR/CFR system.

WHY: To provide the public with access to information necessary to research Federal agency regulations which directly affect them. There will be no discussion of specific agency regulations.

WHEN: Tuesday, September 11, 2012
9 a.m.–12:30 p.m.

WHERE: Office of the Federal Register
Conference Room, Suite 700
800 North Capitol Street, NW.
Washington, DC 20002

RESERVATIONS: (202) 741–6008

Printed on recycled paper.

Contents

Federal Register

Vol. 77, No. 139

Thursday, July 19, 2012

Air Force Department
NOTICES
Performance Review Board Members, 42485–42486

Arctic Research Commission
NOTICES
Meetings:
Reports and Updates on Arctic Research Programs and Projects, 42482

Army Department
See Engineers Corps

Coast Guard
RULES
Drawbridge Operations:
Niantic River, Niantic, CT, 42432–42433
Saugus River, Lynn and Revere, MA, 42433
PROPOSED RULES
Special Local Regulations for Marine Events:
Potomac River, National Harbor Access Channel, MD; Withdrawal, 42464–42465
Special Local Regulations:
Cruce a Nado Internacional, Ponce Harbor; Ponce, PR, 42465–42467
Fajardo Offshore Festival II, Fajardo, PR, 42467–42470

Commerce Department
See Industry and Security Bureau
See International Trade Administration
See National Oceanic and Atmospheric Administration
NOTICES
Agency Information Collection Activities; Proposals, Submissions, and Approvals, 42482

Commodity Futures Trading Commission
RULES
End-User Exception to the Clearing Requirement for Swaps, 42560–42591

Defense Department
See Air Force Department
See Engineers Corps
NOTICES
Meetings:
Wage Committee, 42485

Education Department
NOTICES
Agency Information Collection Activities; Proposals, Submissions, and Approvals:
Application for GEAR UP College Savings Account Research Demonstration Project, 42489–42490
Meetings:
Advisory Committee on Student Financial Assistance, 42490

Energy Department
See Federal Energy Regulatory Commission

Engineers Corps
NOTICES
Environmental Impact Statements; Availability, etc.:
Chatfield Reservoir Storage Reallocation, Littleton, CO, 42489
Missouri River Municipal and Industrial Reallocation, 42486–42487
Proposed Panoche Valley Solar Farm, San Benito County, CA, 42488
Reduce Avian Predation on Juvenile Salmonids through Management of Double-Crested Cormorants in the Columbia River Estuary, 42487–42488

Environmental Protection Agency
RULES
Pesticide Tolerances:
Difenoconazole, 42433–42439
PROPOSED RULES
Approvals and Promulgations of Air Quality Implementation Plans:
New Hampshire; Attainment of the One-Hour Ozone Standard for the Portsmouth–Dover–Rochester and Manchester Areas, 42470–42476
NOTICES
Board of Trustees for the National Environmental Education Foundation; New Member, 42491–42492
Objections to State Operating Permits:
Cash Creek Generation, LLC, Cash Creek Generation Station, Henderson County, KY, 42493
Kentucky Syngas, LLC; Muhlenberg County, KY, 42492
Proposed Consent Decrees:
New Source Performance Standards for Municipal Solid Waste Landfills, 42493–42494
Reviews of National Ambient Air Quality Standards for Ozone; Document Availability, 42495–42496

Federal Aviation Administration
RULES
Airworthiness Directives:
Bell Helicopter Textron Canada Helicopters, 42421–42424
Honeywell International, Inc. Global Navigation Satellite Sensor Units, 42419–42421
Pratt & Whitney Turbofan Engines, 42424–42425
Amendments of Air Traffic Service Routes:
Vero Beach, FL, Vicinity, 42425–42427
Amendments of Class E Airspace:
Grinnell, IA, 42427–42428
Amendments of Jet Routes and VOR Federal Airways:
Northeastern United States, 42428–42429
Establishments of Class E Airspace:
West Memphis, AR, 42430
Revocations of Class E Airspace; Amendments of Class D and E Airspace:
Lloydsville and Latrobe, PA, 42430–42432
PROPOSED RULES
Airworthiness Directives:
Bombardier, Inc. Airplanes, 42457–42459
MD Helicopters, Inc. (MDHI) Helicopters, 42459–42462
Piaggio Aero Industries S.p.A., 42454–42455
Piper Aircraft, Inc. Airplanes, 42455–42457

NOTICES
Agency Information Collection Activities; Proposals, Submissions, and Approvals:
Commercial Air Tour Operator Reports, 42548
Damage Tolerance and Fatigue Evaluation of Composite Rotorcraft Structures, 42547–42548
Suspected Unapproved Parts Notification, 42547

Federal Communications Commission
NOTICES
Agency Information Collection Activities; Proposals, Submissions, and Approvals, 42497–42499

Federal Energy Regulatory Commission
NOTICES
Commission Staff Attendances, 42490

Federal Motor Carrier Safety Administration
NOTICES
Privacy Act; Systems of Records, 42548–42552

Fiscal Service
NOTICES
Surety Companies Acceptable of Federal Bonds; Terminations and Mergers:
Harleysville Mutual Insurance Co., 42553–42554
Surety Companies Acceptable on Federal Bonds; Terminations:
Peerles Insurance Co., 42554

Food and Drug Administration
NOTICES
Agency Information Collection Activities; Proposals, Submissions, and Approvals:
Examination of Online Direct-to-Consumer Prescription Drug Promotion, 42500–42501
Guidance for Industry on Formal Dispute Resolution; Appeals Above the Division Level, 42501–42502
Survey of Health Care Providers Responses to Medical Device Labeling, 42502
Meetings:
Ophthalmic Devices Panel of the Medical Devices Advisory Committee, 42503

Health and Human Services Department
See Food and Drug Administration
See National Institutes of Health
NOTICES
Agency Information Collection Activities; Proposals, Submissions, and Approvals, 42499–42500
Designations of Class of Employees for Addition to Special Exposure Cohort; Correction, 42500

Homeland Security Department
See Coast Guard

Housing and Urban Development Department
NOTICES
Agency Information Collection Activities; Proposals, Submissions, and Approvals:
Application for Designation as a Single Family Foreclosure Commissioner, 42505

Industry and Security Bureau
NOTICES
Meetings:
Materials Processing Equipment Technical Advisory Committee, 42483
Materials Technical Advisory Committee, 42482–42483

Interior Department
See Land Management Bureau
See National Park Service

Internal Revenue Service
PROPOSED RULES
Reporting and Notice Requirements for Deferred Vested Benefits; Correction, 42462

International Trade Administration
NOTICES
Applications for Duty-Free Entry of Scientific Instruments, 42483–42484
Meetings:
Civil Nuclear Trade Advisory Committee, 42484–42485

Labor Department
See Occupational Safety and Health Administration

Land Management Bureau
NOTICES
Environmental Impact Statements; Availability, etc.:
Long Canyon Mine Project, Elko County, NV, 42505–42506
Filings of Plats of Surveys:
California, 42506
Meetings:
Eastern Montana Resource Advisory Council, 42507

Legal Services Corporation
NOTICES
Meetings; Sunshine Act, 42513–42515

National Credit Union Administration
NOTICES
Meetings; Sunshine Act, 42515

National Institutes of Health
NOTICES
Meetings:
Center for Scientific Review, 42504
National Institute of Allergy and Infectious Diseases, 42503–42504
Prospective Grants of Exclusive Licenses:
Development of Diagnostic Tool for Diagnosing Benign Versus Malignant Thyroid Lesions, 42504–42505

National Oceanic and Atmospheric Administration
RULES
Fisheries of the Exclusive Economic Zone Off Alaska:
Pacific Ocean Perch in the West Yakutat District of the Gulf of Alaska, 42439–42440
PROPOSED RULES
Fisheries of the Caribbean, Gulf of Mexico, and South Atlantic:
Reef Fish Fishery of the Gulf of Mexico; Amendment 35, 42476–42481

National Park Service
NOTICES
Inventory Completions:
History Colorado, Denver, CO, 42510–42513
New York University College of Dentistry, New York, NY, 42507–42509, 42513
New York University College of Dentistry, New York, NY; Correction, 42510

University of Montana, Missoula, MT, 42509–42510

National Science Foundation
NOTICES
Antarctic Conservation Act Permits, 42515

Occupational Safety and Health Administration
PROPOSED RULES
Hawaii State Plan for Occupational Safety and Health, 42462–42464

Personnel Management Office
RULES
Federal Employees Health Benefits Program Coverage for Certain Firefighters, 42417–42418

Postal Regulatory Commission
NOTICES
Product List Changes, 42515–42516

Public Debt Bureau
See Fiscal Service

Securities and Exchange Commission
NOTICES
Applications:
The Dreyfus Corporation, et al., 42516–42522
Meetings; Sunshine Act, 42522
Self-Regulatory Organizations; Proposed Rule Changes:
Chicago Board Options Exchange, Inc., 42539–42541
NASDAQ OMX BX, Inc., 42522–42523
NASDAQ OMX PHLX LLC, 42524–42525, 42541–42546
New York Stock Exchange LLC; NYSE Amex LLC, 42525–42529
NYSE Arca, Inc., 42529–42535
NYSE MKT LLC, 42535–42539

Small Business Administration
PROPOSED RULES
Small Business Size Standards:
Utilities, 42441–42454
NOTICES
Major Disaster Declarations:
Florida; Amendment 1, 42546

State Department
NOTICES
Designations as Global Terrorists:
Ahmed Abdulrahman Sihab Ahmed Sihab, 42546

Surface Transportation Board
NOTICES
Agency Information Collection Activities; Proposals, Submissions, and Approvals, 42552–42553

Transportation Department
See Federal Aviation Administration
See Federal Motor Carrier Safety Administration
See Surface Transportation Board
NOTICES
Funding Availabilities:
Small Business Transportation Resource Center Program, 42546

Treasury Department
See Fiscal Service
See Internal Revenue Service

Veterans Affairs Department
NOTICES
Agency Information Collection Activities; Proposals, Submissions, and Approvals:
Access to Financial Records, 42556–42557
Application for Fee or Personnel Designation, 42554–42555
Authorization to Substitute a Claim of a Deceased Claimant, 42554
Notice of Disagreement, 42556
Request for and Authorization to Release Medical Records or Health Information, 42555–42556
Privacy Act; Systems of Records, 42594–42615

Separate Parts In This Issue

Part II
Commodity Futures Trading Commission, 42560–42591

Part III
Veterans Affairs Department, 42594–42615

Reader Aids

Consult the Reader Aids section at the end of this page for phone numbers, online resources, finding aids, reminders, and notice of recently enacted public laws.

To subscribe to the Federal Register Table of Contents LISTSERV electronic mailing list, go to http://listserv.access.gpo.gov and select Online mailing list archives, FEDREGTOC-L, Join or leave the list (or change settings); then follow the instructions.

CFR PARTS AFFECTED IN THIS ISSUE

A cumulative list of the parts affected this month can be found in the Reader Aids section at the end of this issue.

3 CFR

Administrative Orders:

Notices:

Notice of July 18, 2012 42619

5 CFR

890.....42417

13 CFR

Proposed Rules:

121.....42441

14 CFR

39 (3 documents) 42419, 42421, 42424

71 (5 documents) 42425, 42427, 42428, 42430

Proposed Rules:

39 (4 documents) 42454, 42455, 42457, 42459

17 CFR

39.....42560

26 CFR

Proposed Rules:

1.....42462

301.....42462

29 CFR

Proposed Rules:

1952.....42462

33 CFR

117 (3 documents) 42432, 42433

Proposed Rules:

100 (3 documents) 42464, 42465, 42467

40 CFR

180.....42433

Proposed Rules:

52.....42470

50 CFR

679.....42439

Proposed Rules:

622.....42476

Rules and Regulations

Federal Register
Vol. 77, No. 139
Thursday, July 19, 2012

This section of the FEDERAL REGISTER contains regulatory documents having general applicability and legal effect, most of which are keyed to and codified in the Code of Federal Regulations, which is published under 50 titles pursuant to 44 U.S.C. 1510.

The Code of Federal Regulations is sold by the Superintendent of Documents. Prices of new books are listed in the first FEDERAL REGISTER issue of each week.

OFFICE OF PERSONNEL MANAGEMENT

5 CFR Part 890

RIN 3206–AM66

Federal Employees Health Benefits Program Coverage for Certain Firefighters

AGENCY: Office of Personnel Management.

ACTION: Interim final rule.

SUMMARY: The United States Office of Personnel Management (OPM) is issuing an interim final rule to amend the Federal Employees Health Benefits Program (FEHB) regulations to make certain firefighters hired under a temporary appointment eligible to be enrolled in a health benefits plan under the FEHB.

DATES: This rule is effective July 17, 2012. OPM must receive comments on or before September 17, 2012.

ADDRESSES: Send written comments to Michael W. Kaszynski, Senior Policy Analyst, Planning and Policy Analysis, U.S. Office of Personnel Management, Room 3415, 1900 E Street NW., Washington, DC; or FAX to (202) 606–4640 Attn: Michael Kaszynski. You may also submit comments using the Federal eRulemaking Portal: *http://www.regulations.gov.* Follow the instructions for submitting comments.

FOR FURTHER INFORMATION CONTACT: Michael W. Kaszynski at *Michael.Kaszynski@opm.gov* or (202) 606–0004.

SUPPLEMENTARY INFORMATION: This interim final rule immediately extends eligibility for health insurance coverage under the Federal Employees Health Benefits (FEHB) program to temporary firefighters and fire protection personnel. The federal government has a critical need to hire and quickly deploy qualified firefighters and other fire protection personnel to areas of the country where disasters caused by man or nature require their services. The federal agencies that routinely deploy firefighters to respond to these disasters, including the Departments of Agriculture and Interior, have used temporary appointment authorities to bring firefighting personnel on board, as these authorities provide the flexibility they need to quickly increase their firefighting workforce to address wildfire emergencies and then to decrease the workforce when the emergencies are resolved.

Pursuant to 5 U.S.C. 8913(b), OPM has broad authority to prescribe the conditions under which employees are eligible to enroll in the FEHB program and is empowered to include or exclude employees on the basis of the nature and type of their employment or conditions pertaining to their appointments, including the duration of the appointment. Under current OPM regulations, individuals serving under temporary appointments have generally been excluded from coverage, with limited exceptions not relevant here. Accordingly, the only circumstances under which temporary employees previously could secure coverage under the FEHB program are those set forth in 5 U.S.C. 8906a, which allows temporary employees who have completed one full year of continuous employment to secure coverage at their own expense. Temporary firefighters and fire protection personnel do not generally qualify for coverage under 5 U.S.C. 8906a because they do not work for full one-year periods. Thus, they are not eligible for coverage under the FEHB program at all. This regulation would for the first time provide FEHB coverage to these firefighters and fire protection personnel, as well as their families, pursuant to OPM's broad regulatory authority under 5 U.S.C. 8913(b), allowing them to obtain health insurance through their employer.

OPM believes that the extension of this coverage is appropriate because firefighters face unique hazards and risks to their health. The day-to-day job of a firefighter involves frequent exposure to environmental risk factors that can precipitate the onset of severe and life-threatening diseases like cancer. Guidotti TL, *Evaluating causality for occupational cancers: the example of firefighters.* Occup. Med. (Lond). 2007; 57; 466–71. The nature of this work necessarily involves intense physical stress that can result in potentially fatal cardiac events, job-related injuries, and an adverse psychological impact. U.S. Dep't of Homeland Sec., U.S. Fire Admin., Fire-Related Firefighter Injuries Reported to NFIRS, Topical Fire Report Series, Vol. 11, Issue 7, February 2011, *available at http://www.usfa.fema.gov/downloads/pdf/statistics/v11i7.pdf;* Kales SN, Soteriades ES, Christoudias SG, Christiani DC, *Firefighters and on-duty deaths from coronary heart disease: a case control study.* Environ. Health. 2003; 2(1):14; Carey MG, Al-Zaiti SS, Dean GE, Sessanna L, Finnell DS, *Sleep Problems, Depression, Substance Use, Social Bonding, and Quality of Life in Professional Firefighters.* J. Occup. Environ. Med. 2011; 53(8):928–33.

Although firefighters are eligible for worker's compensation for injuries suffered on the job, they nonetheless have a heightened need for health insurance coverage, so that they can obtain preventive care and benefit from early detection of the chronic and life-threatening conditions from which they face increased risk, in addition to receiving treatment for illnesses and injuries from which they are currently suffering. Providing firefighters coverage under the FEHB program acknowledges the unique hazards and increased risks they face for their Federal service and enhances the quality of their lives by ensuring they have access to the medical benefits necessary to promote prevention and early intervention and treatment for diseases that cannot be prevented.

In addition, in order to protect the public health and safety, the Departments of Agriculture and Interior have a critical need this year, as in many years, for experienced firefighting personnel. They wish not only to recruit experienced firefighters this year, but also to maintain their interest in returning to serve during subsequent fire seasons. Offering health insurance coverage will provide additional assurances that these Departments will continue to successfully recruit and retain qualified firefighters and fire protection personnel for this and future fire seasons. OPM is committed to making the process for signing up for FEHB coverage simple and streamlined so that the firefighters covered by this

rule can secure their new benefits with minimal burden. We are working closely with the Departments of Agriculture and Interior to ensure firefighters are able to promptly enroll for FEHB coverage.

OPM recognizes that there may be other groups of employees not currently covered by the FEHB program because of the temporary nature of their appointments, but who are similarly situated to firefighting personnel in that they perform emergency response services. Accordingly, OPM has also added a new subsection (i) to its regulations that permits agencies to request that OPM extend FEHB coverage to such employees. OPM intends to construe this subsection narrowly, applying it only to employees who are engaged in emergency response services similar to the services being performed by those responding to the wildfires, and only when requested by their employing agencies. OPM will issue guidance to assist agencies in implementing this provision. Agencies may submit requests to OPM under this provision after OPM issues its guidance.

Finally, OPM is also soliciting comments from the public regarding whether it should explicitly provide FEHB coverage under subsection (h) to additional employees who are currently ineligible under the provisions of subsection (c), but who perform similar emergency response services, including certain employees who are appointed pursuant to Section 306(b)(1) of the Robert T. Stafford Disaster Relief and Emergency Assistance Act (42 U.S.C. 5149(b)(1)) to respond to major disasters and emergencies declared by the President.

Waiver of Proposed Rulemaking

OPM is issuing this regulation as an interim final rule. Under section 553(b) of the Administrative Procedure Act (APA) (5 U.S.C. 551 et seq.), an agency may issue a final rule without first publishing a general notice of proposed rulemaking when it determines, for good cause, that notice and public comment are impracticable, unnecessary, or contrary to the public interest. We have determined that this standard is satisfied.

The United States is experiencing an active wildfire season. Not only are tens of thousands of acres in Western states being blackened, but the wildfires are creating significant environmental damage and health hazards. Water quality, for example, is being compromised up to 100 miles from the burn. Big fires have significant consequences, especially for air quality. A series of large wildfires in Canada in 1995 created massive plumes of carbon monoxide that drifted south through Boston, New York and Washington. The 2003 wildfire season in California caused such a substantial increase in particulate matter, carbon monoxide and nitrous oxide that the fires polluted the air quality outside and inside homes as well. Forest fires can also result in large releases of sediment into rivers and streams, which can clog reservoirs and undermine the quality of drinking water. Therefore, the federal government has a critical need to hire and deploy qualified firefighters to serve the American people.

Moreover, the firefighters and fire protection personnel are putting their lives on the line and voluntarily exposing themselves to hazardous working conditions every day. They have an immediate need for health insurance coverage to obtain preventive care and to allow for early detection of potentially serious conditions, in addition to addressing any health issues that arise during this fire season. Allowing these men and women the opportunity to obtain health insurance coverage will help them to protect themselves and their families.

Because of these conditions, OPM has determined that it would be impracticable, unnecessary, and contrary to the public interest to delay putting the provisions of this interim final regulation in place until a public notice and comment process has been completed. We find good cause to waive the notice of proposed rulemaking and to issue this final rule on an interim basis. We will accept public comments on this interim final rule for 60 days.

We are also dispensing with the usual requirement that a new rule not take effect until 30 days after it is issued. Instead, this rule is effective immediately upon public display. Immediate effectiveness is authorized because this is a substantive rule granting an exception to the prohibition on providing health insurance coverage to temporary employees. *See* 5 U.S.C. 553(d)(1). Moreover, for the reasons set forth above, there is good cause to make this rule effective immediately.

Regulatory Flexibility Act

I certify that this regulation will not have a significant economic impact on a substantial number of small entities because the regulation only adds additional groups to the list of groups eligible for coverage under FEHB.

Executive Orders 13563 and 12866, Regulatory Review

This rule has been reviewed by the Office of Management and Budget in accordance with Executive Orders 13563 and 12866.

Federalism

We have examined this rule in accordance with Executive Order 13132, Federalism, and have determined that this rule will not have any negative impact on the rights, roles and responsibilities of State, local, or tribal governments.

List of Subjects in 5 CFR Part 890

Administrative practice and procedure, Government employees, Health facilities, Health insurance, Health professions, Hostages, Iraq, Kuwait, Lebanon, Military personnel, Reporting and recordkeeping requirements, Retirement.

U.S. Office of Personnel Management.

John Berry,

Director.

Accordingly, OPM is amending 5 CFR part 890 as follows:

PART 890—FEDERAL EMPLOYEES HEALTH BENEFITS PROGRAM

■ 1. The authority citation for part 890 continues to read as follows:

Authority: 5 U.S.C. 8913; Sec. 890.301 also issued under sec. 311 of Pub. L. 111–03, 123 Stat. 64; Sec. 890.111 also issued under section 1622(b) of Pub. L. 104–106, 110 Stat. 521; Sec. 890.112 also issued under section 1 of Pub. L. 110–279, 122 Stat. 2604; 5 U.S.C. 8913; Sec. 890.803 also issued under 50 U.S.C. 403p, 22 U.S.C. 4069c and 4069c–1; subpart L also issued under sec. 599C of Pub. L. 101–513, 104 Stat. 2064, as amended; Sec. 890.102 also issued under sections 11202(f), 11232(e), 11246 (b) and (c) of Pub. L. 105–33, 111 Stat. 251; and section 721 of Pub. L. 105–261, 112 Stat. 2061.

■ 2. Section 890.102 to be amended by adding paragraphs (h) and (i) to read as follows:

§ 890.102 Coverage.

* * * * *

(h) Notwithstanding paragraphs (c)(1) and (2) of this section, an employee who is in a position identified by OPM that provides emergency response services for wildland fire protection is eligible to be enrolled in a health benefits plan under this part.

(i) Notwithstanding paragraphs (c)(1) and (2) of this section, upon request by the employing agency, OPM may grant eligibility to employees performing similar types of emergency response services to enroll in a health benefits plan under this part.

[FR Doc. 2012–17623 Filed 7–17–12; 8:45 am]

BILLING CODE 6325–63–P

DEPARTMENT OF TRANSPORTATION

Federal Aviation Administration

14 CFR Part 39

[Docket No. FAA–2012–0758; Directorate Identifier 2012–CE–027–AD; Amendment 39–17129; AD 2012–14–15]

RIN 2120–AA64

Airworthiness Directives; Honeywell International, Inc. Global Navigation Satellite Sensor Units

AGENCY: Federal Aviation Administration (FAA), DOT.

ACTION: Final rule; request for comments.

SUMMARY: We are adopting a new airworthiness directive (AD) for certain aircraft equipped with Honeywell International, Inc. Model KGS200 Mercury² wide area augmentation system (WAAS) global navigation satellite sensor units (GNSSU). This AD requires you cease all localizer performance (LP), localizer performance with vertical guidance (LPV), and satellite based augmentation system (SBAS) lateral navigation/vertical navigation (LNAV/VNAV) approaches until a software problem is corrected. This AD was prompted by a report and follow-up investigation of a software problem that occurred during flight test trials of SBAS-capable aircraft using a similar Honeywell global positioning system (GPS) sensor and the same software as the Model KGS200 Mercury² GNSSU. A software problem occurred that could result in misleading information during LP, LPV, or SBAS LNAV/VNAV approaches. We are issuing this AD to correct the unsafe condition on these products.

DATES: This AD is effective July 19, 2012.

We must receive comments on this AD by September 4, 2012.

ADDRESSES: You may send comments, using the procedures found in 14 CFR 11.43 and 11.45, by any of the following methods:

- *Federal eRulemaking Portal:* Go to *http://www.regulations.gov.* Follow the instructions for submitting comments.
- *Fax:* 202–493–2251.
- *Mail:* U.S. Department of Transportation, Docket Operations, M–30, West Building Ground Floor, Room W12–140, 1200 New Jersey Avenue SE., Washington, DC 20590.
- *Hand Delivery:* U.S. Department of Transportation, Docket Operations, M–30, West Building Ground Floor, Room W12–140, 1200 New Jersey Avenue SE., Washington, DC 20590, between 9 a.m. and 5 p.m., Monday through Friday, except Federal holidays.

Examining the AD Docket

You may examine the AD docket on the Internet at *http://www.regulations.gov;* or in person at the Docket Management Facility between 9 a.m. and 5 p.m., Monday through Friday, except Federal holidays. The AD docket contains this AD, the regulatory evaluation, any comments received, and other information. The street address for the Docket Office (phone: 800–647–5527) is in the **ADDRESSES** section. Comments will be available in the AD docket shortly after receipt.

FOR FURTHER INFORMATION CONTACT:

- *Non-Pilatus aircraft-related:* Albert Ma, Aerospace Engineer, Wichita Aircraft Certification Office, FAA, 1801 S. Airport Road, Room 100, Wichita, Kansas 67209; phone: (316) 946–4151; fax: (316) 946–4107; email: *albert.ma@faa.gov.*
- *Pilatus aircraft-related:* Doug Rudolph, Aerospace Engineer, FAA, Small Airplane Directorate, 901 Locust, Room 301, Kansas City, Missouri 64106; telephone: (816) 329–4059; fax: (816) 329–4090; email: *doug.rudolph@faa.gov.*

SUPPLEMENTARY INFORMATION:

Discussion

We received a report that during flight test trials of SBAS-capable aircraft using a similar Honeywell GPS sensor with the same software as the Honeywell International, Inc. Model KGS200 Mercury² WAAS GNSSU, a software problem occurred that could result in misleading information during LP, LPV, or SBAS LNAV/VNAV approaches.

Investigation found the GPS receiver could compute an incorrect ionospheric correction and error estimate such that the error estimate no longer bounds the error and the downstream monitor cannot detect it. This can potentially lead to hazardously misleading information.

The software problem is due to a mathematical rounding error, which results in misleading information.

At this time, the only type-certificated airplanes that the product is installed in is Pilatus PC–12/47E airplanes.

This condition, if not corrected, could result in misleading information during instrument meteorological conditions, which could prevent the aircraft from performing safe instrument approach procedures, causing controlled flight into terrain.

FAA's Determination

We are issuing this AD because we evaluated all the relevant information and determined the unsafe condition described previously is likely to exist or develop in other products of the same type design.

AD Requirements

This AD requires incorporating airworthiness limitations and placards that prohibit LP, LPV, and SBAS LNAV/VNAV approaches until the software problem is corrected.

Interim Action

We consider this AD interim action. If and when new software is developed, the FAA will evaluate this software and may take further rulemaking action.

FAA's Justification and Determination of the Effective Date

An unsafe condition exists that requires the immediate adoption of this AD. The FAA has found that the risk to the flying public justifies waiving notice and comment prior to adoption of this rule because this condition, if not corrected, could result in misleading information during instrument meteorological conditions, which could prevent the aircraft from performing safe instrument approach procedures, causing controlled flight into terrain. Therefore, we find that notice and opportunity for prior public comment are impracticable and that good cause exists for making this amendment effective in less than 30 days.

Comments Invited

This AD is a final rule that involves requirements affecting flight safety and was not preceded by notice and an opportunity for public comment. However, we invite you to send any written data, views, or arguments about this AD. Send your comments to an address listed under the **ADDRESSES** section. Include the docket number FAA–2012–17129 and Directorate Identifier 2012–CE–027–AD at the beginning of your comments. We specifically invite comments on the overall regulatory, economic, environmental, and energy aspects of this AD. We will consider all comments received by the closing date and may amend this AD because of those comments.

We will post all comments we receive, without change, to *http://www.regulations.gov,* including any personal information you provide. We will also post a report summarizing each substantive verbal contact we receive about this AD.

Costs of Compliance

We estimate that this AD affects 195 GNSSU installed on, but not limited to,

PILATUS AIRCRAFT LTD. Model PILATUS PC–12/47E airplanes of U.S. registry.

We estimate the following costs to comply with this AD:

ESTIMATED COSTS

Action	Labor cost	Parts cost	Cost per product	Cost on U.S. operators
Incorporate language into the limitations section of the flight manual and manufacture and install a placard.	0.5 work-hour × $85 per hour = $42.50.	$5	$47.50	$9,263

Authority for This Rulemaking

Title 49 of the United States Code specifies the FAA's authority to issue rules on aviation safety. Subtitle I, section 106, describes the authority of the FAA Administrator. ''Subtitle VII: Aviation Programs'' describes in more detail the scope of the Agency's authority.

We are issuing this rulemaking under the authority described in Subtitle VII, Part A, Subpart III, Section 44701: ''General requirements.'' Under that section, Congress charges the FAA with promoting safe flight of civil aircraft in air commerce by prescribing regulations for practices, methods, and procedures the Administrator finds necessary for safety in air commerce. This regulation is within the scope of that authority because it addresses an unsafe condition that is likely to exist or develop on products identified in this rulemaking action.

Regulatory Findings

This AD will not have federalism implications under Executive Order 13132. This AD will not have a substantial direct effect on the States, on the relationship between the national government and the States, or on the distribution of power and responsibilities among the various levels of government.

For the reasons discussed above, I certify that this AD:

(1) Is not a ''significant regulatory action'' under Executive Order 12866,

(2) Is not a ''significant rule'' under DOT Regulatory Policies and Procedures (44 FR 11034, February 26, 1979),

(3) Will not affect intrastate aviation in Alaska, and

(4) Will not have a significant economic impact, positive or negative, on a substantial number of small entities under the criteria of the Regulatory Flexibility Act.

List of Subjects in 14 CFR Part 39

Air transportation, Aircraft, Aviation safety, Incorporation by reference, Safety.

Adoption of the Amendment

Accordingly, under the authority delegated to me by the Administrator, the FAA amends 14 CFR part 39 as follows:

PART 39—AIRWORTHINESS DIRECTIVES

■ 1. The authority citation for part 39 continues to read as follows:

Authority: 49 U.S.C. 106(g), 40113, 44701.

§ 39.13 [Amended]

■ 2. The FAA amends § 39.13 by adding the following new airworthiness directive (AD):

2012–14–15 Honeywell International, Inc.: Amendment 39–17129; Docket No. FAA–2012–0758; Directorate Identifier 2012–CE–027–AD.

(a) Effective Date

This AD is effective July 19, 2012.

(b) Affected ADs

None.

(c) Applicability

(1) This AD applies to all Honeywell International, Inc. Model KGS200 Mercury² wide area augmentation system (WAAS) global navigation satellite sensor units (GNSSU), Honeywell part numbers (P/N) 066–01201–0102 and 066–01201–0104.

(2) This product is installed on, but not limited to, PILATUS AIRCRAFT LTD. Model PILATUS PC–12/47E airplanes, certificated in any category.

(d) Subject

Joint Aircraft System Component (JASC)/ Air Transport Association (ATA) of America Code 3457, Navigation.

(e) Unsafe Condition

This AD was prompted by a report and follow-up investigation of a software problem that occurred during flight test trials of satellite based augmentation system (SBAS)-capable aircraft using a similar Honeywell global positioning system (GPS) sensor and the same software as the Model KGS200 Mercury² GNSSU. A software problem occurred that could result in misleading information during localizer performance (LP), localizer performance with vertical guidance (LPV), or SBAS lateral navigation/ vertical navigation (LNAV/VNAV) approaches. We are issuing this AD to correct the unsafe condition on these products.

(f) Compliance

Comply with this AD within the compliance times specified, unless already done.

(g) Incorporate Language Into the Limitations Section of the Aircraft Flight Manual

(1) Before further flight after July 19, 2012 (the effective date of this AD), incorporate language into the limitations section of the aircraft flight manual (AFM) that states, ''localizer performance (LP), localizer performance with vertical guidance (LPV), and satellite based augmentation system (SBAS) lateral navigation/vertical navigation (LNAV/VNAV) approach operations are prohibited.'' If it can be determined by a review of the AFM that the aircraft does not have LP capability and uses barometric vertical navigation (VNAV), then it is permissible to incorporate language into the limitation section of the AFM that states, ''local performance with vertical guidance (LPV) approaches are prohibited.''

(2) The AFM action required by this AD may be done by an owner/operator (pilot) holding at least a private pilot certificate and must be entered into the aircraft records showing compliance with this AD in accordance with 14 CFR 43.9 (a)(1)(4) and 14 CFR 91.417(a)(2)(v). The record must be maintained as required by 14 CFR §§ 91.173, 121.380, or 135.439.

(h) Fabricate and Install a Placard

(1) Within 3 days after July 19, 2012 (the effective date of this AD), fabricate and install a placard that states, ''LP, LPV, and SBAS LNAV/VNAV approaches are prohibited.'' If it can be determined by a review of the AFM that the aircraft does not have LP capability and uses VNAV, then it is permissible to use a placard that states, ''LPV approaches are prohibited.''

(2) The placard shall be manufactured so that the font size is at least an ⅛″ with black lettering on a white background. The placard must be fabricated and installed by a certificated aircraft mechanic on the instrument panel in clear view of the pilot.

(i) Special Flight Permit

Special flight permits are prohibited for this AD.

(j) Alternative Methods of Compliance (AMOCs)

(1) The Manager, Wichita Aircraft Certification Office (ACO), FAA, has the authority to approve AMOCs for this AD, if requested using the procedures found in 14 CFR 39.19. In accordance with 14 CFR 39.19,

send your request to your principal inspector or local Flight Standards District Office, as appropriate. If sending information directly to the manager of the ACO, send it to the attention of the person identified in the Related Information section of this AD.

(2) Before using any approved AMOC, notify your appropriate principal inspector, or lacking a principal inspector, the manager of the local flight standards district office/ certificate holding district office.

(k) Related Information

For more information about this AD, contact:

(1) Non-Pilatus aircraft-related: Albert Ma, Aerospace Engineer, Wichita Aircraft Certification Office, FAA, 1801 S. Airport Road, Room 100, Wichita, Kansas 67209; phone: (316) 946–4151; fax: (316) 946–4107; email: *albert.ma@faa.gov;* or

(2) Pilatus aircraft-related: Doug Rudolph, Aerospace Engineer, FAA, Small Airplane Directorate, 901 Locust, Room 301, Kansas City, Missouri 64106; telephone: (816) 329–4059; fax: (816) 329–4090; email: *doug.rudolph@faa.gov.*

(l) Material Incorporated by Reference

None.

Issued in Kansas City, Missouri, on July 13, 2012.

Earl Lawrence,

Manager, Small Airplane Directorate, Aircraft Certification Service.

[FR Doc. 2012–17592 Filed 7–18–12; 8:45 am]

BILLING CODE 4910–13–P

DEPARTMENT OF TRANSPORTATION

Federal Aviation Administration

14 CFR Part 39

[Docket No. FAA–2012–0716; Directorate Identifier 2012–SW–011–AD; Amendment 39–17121; AD 2012–14–07]

RIN 2120–AA64

Airworthiness Directives; Bell Helicopter Textron Canada Helicopters

AGENCY: Federal Aviation Administration (FAA), Department of Transportation (DOT).

ACTION: Final rule; request for comments.

SUMMARY: We are adopting an airworthiness directive (AD) superseding an existing airworthiness directive for Bell Helicopter Textron Canada (Bell) Model 407 and 427 helicopters. The existing AD requires inspecting certain hydraulic servo actuators (servo) to determine whether the shaft turns independently of the nut or the clevis assembly, and additional actions based upon the inspection's outcome. The AD also requires reidentifying the servo. Since we issued that AD, Bell has learned that additional servos may need repair or removal. This AD expands the scope of the current AD to include inspections for all servos, and requires that servos meeting inspection requirements be marked with the letter ''V'' after the part number on the data plate. The actions are intended to detect any loose or misaligned parts in the servo that could lead to failure of the servo and subsequent loss of helicopter control.

DATES: This AD becomes effective August 3, 2012.

We must receive comments on this AD by September 17, 2012.

ADDRESSES: You may send comments by any of the following methods:

- *Federal eRulemaking Docket:* Go to *http://www.regulations.gov.* Follow the online instructions for sending your comments electronically.
- *Fax:* 202–493–2251.
- *Mail:* Send comments to the U.S. Department of Transportation, Docket Operations, M–30, West Building Ground Floor, Room W12–140, 1200 New Jersey Avenue SE., Washington, DC 20590–0001.
- *Hand Delivery:* Deliver to the ''Mail'' address between 9 a.m. and 5 p.m., Monday through Friday, except Federal holidays.

Examining The AD Docket

You may examine the AD docket on the Internet at *http://www.regulations.gov* or in person at the Docket Operations Office between 9 a.m. and 5 p.m., Monday through Friday, except Federal holidays. The AD docket contains this AD, the economic evaluation, any comments received, and other information. The street address for the Docket Operations Office (telephone 800–647–5527) is in the **ADDRESSES** section. Comments will be available in the AD docket shortly after receipt.

For service information identified in this AD, contact contact Bell Helicopter Textron Canada Limited, 12,800 Rue de l'Avenir, Mirabel, Quebec J7J1R4; telephone (450) 437–2862 or (800) 363–8023; fax (450) 433–0272; or at *http://www.bellcustomer.com/files/.* You may review the referenced service information at the FAA, Office of the Regional Counsel, Southwest Region, 2601 Meacham Blvd., Room 663, Fort Worth, Texas 76137.

FOR FURTHER INFORMATION CONTACT: Matt Wilbanks, Aviation Safety Engineer, Regulations and Policy Group, Rotorcraft Directorate, FAA, 2601 Meacham Blvd., Fort Worth, Texas 76137; telephone (817) 222–5110; email *matt.wilbanks@faa.gov.*

SUPPLEMENTARY INFORMATION:

Comments Invited

This AD is a final rule that involves requirements affecting flight safety, and we did not provide you with notice and an opportunity to provide your comments prior to it becoming effective. However, we invite you to participate in this rulemaking by submitting written comments, data, or views. We also invite comments relating to the economic, environmental, energy, or federalism impacts that resulted from adopting this AD. The most helpful comments reference a specific portion of the AD, explain the reason for any recommended change, and include supporting data. To ensure the docket does not contain duplicate comments, commenters should send only one copy of written comments, or if comments are filed electronically, commenters should submit them only one time. We will file in the docket all comments that we receive, as well as a report summarizing each substantive public contact with FAA personnel concerning this rulemaking during the comment period. We will consider all the comments we receive and may conduct additional rulemaking based on those comments.

Discussion

On September 19, 2011, we issued AD 2011–15–51, Amendment 39–16817 (76 FR 66609, October 27, 2011) for Bell Model 407 helicopters with a servo, part number (P/N) 206–076–062–105 or 206–076–062–107, and Bell Model 427 helicopters, with a servo, P/N 206–076–062–109 or 206–076–062–111, installed. This AD requires inspecting certain servos to determine whether the shaft turns independently of the nut or the clevis assembly. If the shaft turns independently, this AD requires replacing the servo with an airworthy servo. If the shaft does not turn independently, the AD requires inspecting to determine the condition of the lock washers. Based on the condition of the lock washers, the AD requires either replacing the servo with an airworthy servo or bending the tab of the lock washer flush against a flat surface of the nut or clevis assembly. The AD also requires reidentifying the servo by metal-impression stamping or vibro-etching ''67–01'' onto the modification plate. The AD was prompted by a report that a supplier had a ''quality escape'' resulting in servos with a loose nut, shaft, and clevis assembly because of improper lock-washer installation. An investigation after an accident revealed the clevis nut on the servo was loose. Transport Canada, which is the aviation authority for Canada, notified the FAA of this

unsafe condition and issued AD No. CF–2011–17, dated June 30, 2011. The actions specified by AD 2011–15–51 are intended to prevent a malfunction of a servo in the flight control system and subsequent loss of helicopter control.

Actions Since Existing AD Was Issued

Since we issued AD 2011–15–51 (76 FR 66609, October 27, 2011), Transport Canada issued AD No. CF–2011–17R1, dated December 19, 2011 (AD CF–2011–17R1), which supersedes AD CF–2011–17, to correct an unsafe condition for the Bell Model 407, serial numbers 53000 through 53900, 53911 through 53999, and 54000 through 54081, equipped with servos, P/N 206–076–062–105 or P/N 206–076–062–107; and Model 427 helicopters, serial numbers 56001 through 56077, 58001 and 58002, equipped with servos, P/N 206–076–062–109 or P/N 206–076–062–111. Transport Canada advises that additional servos may have a loose nut, shaft, and clevis assembly after the supplier's ''quality escape.'' Therefore, Transport Canada revised its original AD to include all installed servos, and to require that servos already inspected according to its original AD be reidentified with the letter ''V'' at the end of the part number on the data plate.

FAA's Determination

These helicopters have been approved by the aviation authority of Canada and are approved for operation in the United States. Pursuant to our bilateral agreement with Canada, Transport Canada, its technical representative, has notified us of the unsafe condition described in its AD. We are issuing this AD because we evaluated all information provided by Transport Canada and determined the unsafe condition exists and is likely to exist or develop on other helicopters of these same type designs.

Related Service Information

We reviewed Bell Alert Service Bulletin (ASB) 407–11–96, Revision B, for the Model 407 helicopter, and Bell ASB 427–11–35, Revision B, for the Model 427 helicopter. Both ASBs are dated August 29, 2011 and describe procedures for performing a one-time inspection of the servos before further flight, and reidentifying servos that meet all of the inspection requirements. Transport Canada classified this service information as mandatory and issued AD No. CF–2011–17R1 to ensure the continued airworthiness of these helicopters.

AD Requirements

This AD retains the inspection requirements of AD 2011–15–51 (76 FR 66609, October 27, 2011), and adds a requirement to mark the letter ''V'' at the end of the part number on the data plate if the servo meets all of the inspection's requirements. This AD also expands the applicability to all servos.

Costs of Compliance

We estimate that this AD will affect 582 helicopters of U.S. Registry and that labor costs will average $85 a work hour. Based on these estimates, we expect the following costs:

- The required inspection will take about a ½ hour for a labor cost of about $43 per helicopter. The cost for the total U.S. fleet would be $25,026.
- Replacing the servo, if needed, will require 2 work hours for a labor cost of $170. Parts will cost $33,000 for a total cost of $33,170 per helicopter.

FAA's Justification and Determination of the Effective Date

Providing an opportunity for public comments before adopting these AD requirements would delay implementing the safety actions needed to detect any loose or misaligned parts in the servo, the failure of which could adversely affect control of the helicopter. Therefore, we find that the risk to the flying public justifies waiving notice and comment prior to adoption of this rule because the required corrective actions must be accomplished before further flight.

Authority for This Rulemaking

Title 49 of the United States Code specifies the FAA's authority to issue rules on aviation safety. Subtitle I, section 106, describes the authority of the FAA Administrator. ''Subtitle VII: Aviation Programs,'' describes in more detail the scope of the Agency's authority.

We are issuing this rulemaking under the authority described in ''Subtitle VII, Part A, Subpart III, Section 44701: General requirements.'' Under that section, Congress charges the FAA with promoting safe flight of civil aircraft in air commerce by prescribing regulations for practices, methods, and procedures the Administrator finds necessary for safety in air commerce. This regulation is within the scope of that authority because it addresses an unsafe condition that is likely to exist or develop on products identified in this rulemaking action.

Regulatory Findings

We determined that this AD will not have federalism implications under Executive Order 13132. This AD will not have a substantial direct effect on the States, on the relationship between the national Government and the States, or on the distribution of power and responsibilities among the various levels of government.

For the reasons discussed, I certify that this AD:

1. Is not a ''significant regulatory action'' under Executive Order 12866;
2. Is not a ''significant rule'' under DOT Regulatory Policies and Procedures (44 FR 11034, February 26, 1979);
3. Will not affect intrastate aviation in Alaska to the extent that it justifies making a regulatory distinction; and
4. Will not have a significant economic impact, positive or negative, on a substantial number of small entities under the criteria of the Regulatory Flexibility Act.

We prepared an economic evaluation of the estimated costs to comply with this AD and placed it in the AD docket.

List of Subjects in 14 CFR Part 39

Air transportation, Aircraft, Aviation safety, Incorporation by reference, Safety.

Adoption of the Amendment

Accordingly, under the authority delegated to me by the Administrator, the FAA amends 14 CFR part 39 as follows:

PART 39—AIRWORTHINESS DIRECTIVES

■ 1. The authority citation for part 39 continues to read as follows:

Authority: 49 U.S.C. 106(g), 40113, 44701.

§ 39.13 [Amended]

■ 2. The FAA amends § 39.13 by removing Amendment 39–16817 (76 FR 66609, October 27, 2011), and adding the following new airworthiness directive (AD):

2012–14–07 Bell Helicopter Textron Canada Helicopters: Amendment 39–17121; Docket No. FAA–2012–0716; Directorate Identifier 2012–SW–011–AD.

(a) Applicability

This AD applies to the following helicopters, certificated in any category:

(1) Model 407 helicopters, serial numbers (S/Ns) 53000 through 53900, 53911 through 53999, and 54000 through 54081, with a hydraulic servo actuator assembly (servo) part number (P/N) 206–076–062–105 or P/N 206–076–062–107; and

(2) Model 427 helicopters, S/Ns 56001 through 56077, 58001, and 58002, with a servo, P/N 206–076–062–109 or P/N 206–076–062–111.

(b) Unsafe Condition

This AD defines the unsafe condition as a loose or misaligned part in the servo that

could lead to failure of the servo and subsequent loss of helicopter control.

(c) Other Affected ADs

This AD supersedes AD 2011–15–51, Amendment 39–16817 (76 FR 66609, October 27, 2011).

(d) Effective Date

This AD becomes effective August 3, 2012.

(e) Compliance

You are responsible for performing each action required by this AD within the specified compliance time unless it has already been accomplished prior to that time.

(f) Required Actions

(1) Before further flight, conduct a one-time visual inspection of the servo by doing the following:

(i) Retract the boot depicted as 230 in Figure 1 to Paragraph (f) of this AD.

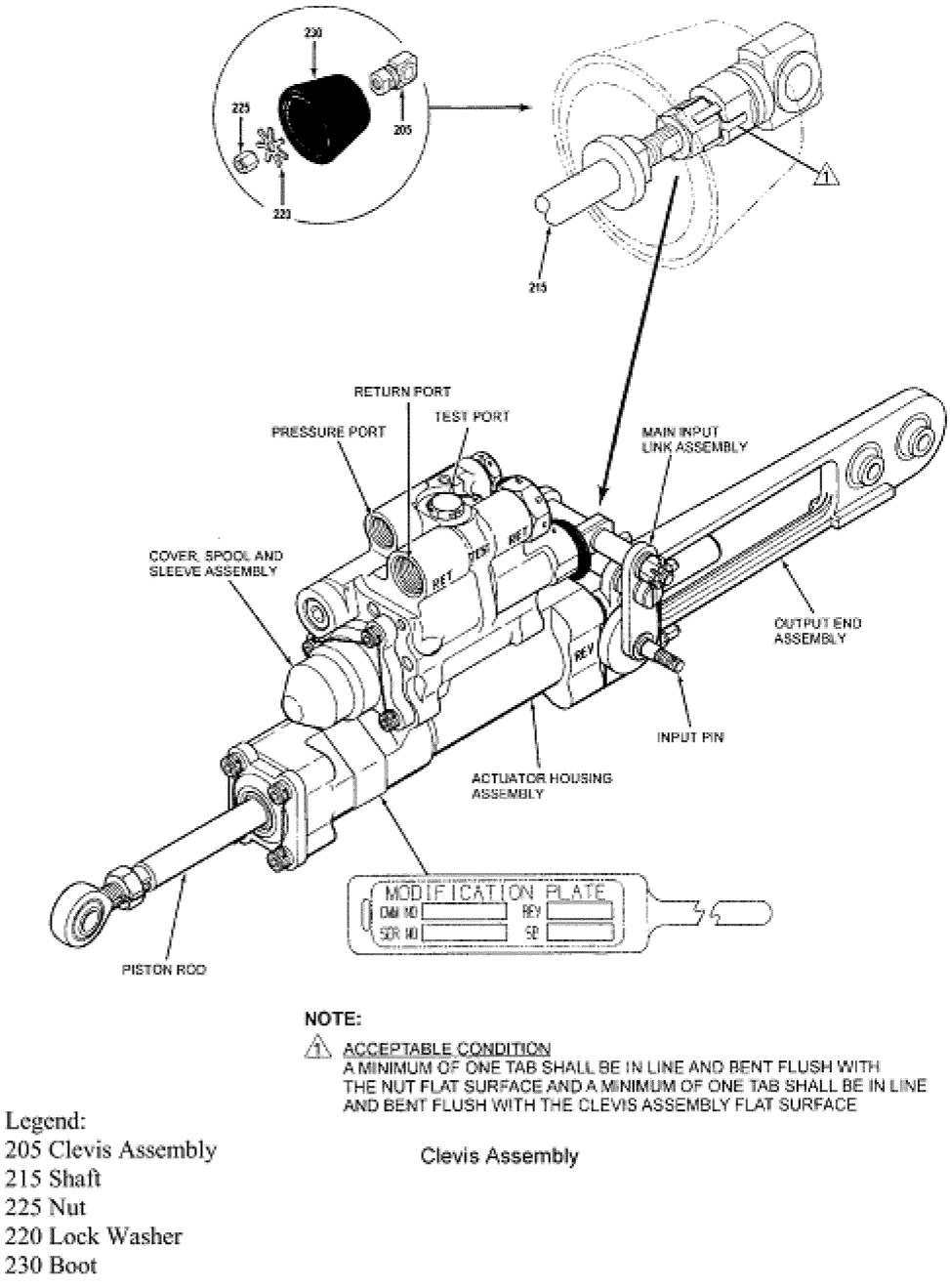

Figure 1 to Paragraph (f)

(ii) Applying only hand pressure, determine whether the nut, the shaft, or the clevis assembly, depicted as items 225, 215 and 205, respectively, in Figure 1 to Paragraph (f) of this AD, turn independently. If the shaft turns independently of the nut or clevis assembly, before further flight, replace the servo with an airworthy servo.

(iii) If the shaft does not turn independently, inspect to determine if at least one tab of the lock washer is bent flush against a flat surface of the nut and if at least one tab of the lock washer is bent flush against a flat surface of the clevis assembly.

(iv) If at least one lock washer tab is not aligned and bent flush with a nut flat surface and at least one lock washer tab is not aligned and bent flush with a flat surface of the clevis assembly, before further flight, replace the servo with an airworthy servo.

(v) If any tab of the lock washer is not bent flush against either a flat surface of the nut or clevis assembly, bend the tab flush against a flat surface.

(2) After accomplishing paragraphs (f)(1)(i) through (f)(1)(v), vibro-etch the letter ''V'' at the end of the part number on the data plate.

(g) Alternative Methods of Compliance (AMOCs)

(1) The Manager, Safety Management Group, FAA, may approve AMOCs for this AD. Send your proposal to: Matt Wilbanks, Aviation Safety Engineer, Regulations and Policy Group, Rotorcraft Directorate, FAA, 2601 Meacham Blvd., Fort Worth, Texas 76137; telephone (817) 222–5110; email *matt.wilbanks@faa.gov*.

(2) For operations conducted under a 14 CFR part 119 operating certificate or under 14 CFR part 91, subpart K, we suggest that you notify your principal inspector, or lacking a principal inspector, the manager of the local flight standards district office or certificate holding district office before operating any aircraft complying with this AD through an AMOC.

(h) Additional Information

(1) Bell Helicopter Alert Service Bulletins 407–11–96 and 427–11–35, both Revision B and both dated August 29, 2011, which are not incorporated by reference, contain additional information about the subject of this AD. For service information identified in this AD, contact Bell Helicopter Textron Canada Limited, 12,800 Rue de l'Avenir, Mirabel, Quebec J7J1R4; telephone (450) 437–2862 or (800) 363–8023; fax (450) 433–0272; or at *http://www.bellcustomer.com/files/*. You may review a copy of the service information at the FAA, Office of the Regional Counsel, Southwest Region, 2601 Meacham Blvd., Room 663, Fort Worth, Texas 76137.

(2) The subject of this AD is addressed in Transport Canada AD CF–2011–17R1, dated December 19, 2011.

(i) Subject

Joint Aircraft Service Component (JASC) Code: 6730, Rotorcraft Servo System.

Issued in Fort Worth, Texas, on July 2, 2012.

Kim Smith,

Manager, Rotorcraft Directorate, Aircraft Certification Service.

[FR Doc. 2012–17561 Filed 7–18–12; 8:45 am]

BILLING CODE 4910–13–P

DEPARTMENT OF TRANSPORTATION

Federal Aviation Administration

14 CFR Part 39

[Docket No. FAA–2010–1095; Directorate Identifier 2009–NE–40–AD; Amendment 39–17104; AD 2012–13–02]

RIN 2120–AA64

Airworthiness Directives; Pratt & Whitney Turbofan Engines

AGENCY: Federal Aviation Administration (FAA), DOT.

ACTION: Final rule.

SUMMARY: We are superseding an existing airworthiness directive (AD) for all Pratt & Whitney Division PW4074 and PW4077 turbofan engines. That AD currently requires removing the 15th stage high-pressure compressor (HPC) disk within 12,000 cycles since new (CSN) or using a drawdown removal plan for disks that exceed 12,000 CSN. This new AD requires the same actions and clarifies that 15th stage HPC disks that have accumulated more than 9,865 CSN require a borescope inspection (BSI) or eddy current inspection (ECI) of the disk outer rim front rail for cracks prior to accumulating 12,000 CSN. This AD was prompted by a request from an operator that we clarify our inspection schedule for 15th stage HPC disks that have accumulated more than 9,865, but less than 12,000 CSN, on the effective date of the AD. We are issuing this AD to prevent cracks from propagating into the disk bolt holes, which could result in a failure of the 15th stage HPC disk, uncontained engine failure, and damage to the airplane.

DATES: This AD is effective August 23, 2012.

The Director of the Federal Register approved the incorporation by reference of a certain other publication listed in this AD as of September 8, 2011 (76 FR 47056, August 4, 2011).

ADDRESSES: For service information identified in this AD, contact Pratt & Whitney, 400 Main St., East Hartford, CT 06108; phone: 860–565–7700; fax: 860–565–1605. You may review copies of the referenced service information at the FAA, Engine & Propeller Directorate, 16 New England Executive Park, Burlington, MA. For information on the availability of this material at the FAA, call 781–238–7125.

Examining the AD Docket

You may examine the AD docket on the Internet at *http://www.regulations.gov;* or in person at the Docket Management Facility between 9 a.m. and 5 p.m., Monday through Friday, except Federal holidays. The AD docket contains this AD, the regulatory evaluation, any comments received, and other information. The address for the Docket Office (phone: 800–647–5527) is Document Management Facility, U.S. Department of Transportation, Docket Operations, M–30, West Building Ground Floor, Room W12–140, 1200 New Jersey Avenue SE., Washington, DC 20590.

FOR FURTHER INFORMATION CONTACT: Ian Dargin, Aerospace Engineer, Engine Certification Office, FAA, 12 New England Executive Park, Burlington, MA 01803; phone: 781–238–7178; fax: 781–238–7199; email: *ian.dargin@faa.gov.*

SUPPLEMENTARY INFORMATION:

Discussion

We issued a notice of proposed rulemaking (NPRM) to amend 14 CFR part 39 to supersede AD 2011–14–07, Amendment 39–16742 (76 FR 47056, August 4, 2011). That AD applies to the specified products. The NPRM published in the **Federal Register** on February 24, 2012 (77 FR 11017). That NPRM proposed to continue to require removing the 15th stage HPC disk within 12,000 CSN or using a drawdown removal plan for disks that exceed 12,000 CSN. That NPRM also proposed to clarify our inspection schedule for 15th stage HPC disks that have accumulated more than 9,865, but less than 12,000 CSN, on the effective date of the AD.

Comments

We gave the public the opportunity to participate in developing this AD. We have considered the comments received. United Airlines and The Boeing Company support the NPRM.

Conclusion

We reviewed the relevant data, considered the comments received, and determined that air safety and the public interest require adopting the AD as proposed.

Costs of Compliance

We estimate that this AD will affect 44 engines installed on airplanes of U.S. registry. Prorated parts life will cost about $66,000 per 15th stage HPC disk. Based on these figures, we estimate the total cost of the AD to U.S. operators to be $2,904,000. The new requirements of this AD add no additional economic burden.

Authority for This Rulemaking

Title 49 of the United States Code specifies the FAA's authority to issue rules on aviation safety. Subtitle I,

Section 106, describes the authority of the FAA Administrator. Subtitle VII, Aviation Programs, describes in more detail the scope of the Agency's authority.

We are issuing this rulemaking under the authority described in Subtitle VII, Part A, Subpart III, Section 44701, ''General requirements.'' Under that section, Congress charges the FAA with promoting safe flight of civil aircraft in air commerce by prescribing regulations for practices, methods, and procedures the Administrator finds necessary for safety in air commerce. This regulation is within the scope of that authority because it addresses an unsafe condition that is likely to exist or develop on products identified in this rulemaking action.

Regulatory Findings

We have determined that this AD will not have federalism implications under Executive Order 13132. This AD will not have a substantial direct effect on the States, on the relationship between the national government and the States, or on the distribution of power and responsibilities among the various levels of government.

For the reasons discussed above, I certify that this AD:

(1) Is not a ''significant regulatory action'' under Executive Order 12866,

(2) Is not a ''significant rule'' under DOT Regulatory Policies and Procedures (44 FR 11034, February 26, 1979),

(3) Will not affect intrastate aviation in Alaska, and

(4) Will not have a significant economic impact, positive or negative, on a substantial number of small entities under the criteria of the Regulatory Flexibility Act.

List of Subjects in 14 CFR Part 39

Air transportation, Aircraft, Aviation safety, Incorporation by reference, Safety.

Adoption of the Amendment

Accordingly, under the authority delegated to me by the Administrator, the FAA amends 14 CFR part 39 as follows:

PART 39—AIRWORTHINESS DIRECTIVES

■ 1. The authority citation for part 39 continues to read as follows:

Authority: 49 U.S.C. 106(g), 40113, 44701.

§ 39.13 [Amended]

■ 2. The FAA amends § 39.13 by removing airworthiness directive (AD) 2011–14–07, Amendment 39–16742 (76 FR 47056, August 4, 2011), and adding the following new AD:

2012–13–02 Pratt & Whitney Division: Amendment 39–17104; Docket No. FAA–2010–1095; Directorate Identifier 2009–NE–40–AD.

(a) Effective Date

This AD is effective August 23, 2012.

(b) Affected ADs

This AD supersedes AD 2011–14–07, Amendment 39–16742 (76 FR 47056, August 4, 2011).

(c) Applicability

This AD applies to Pratt & Whitney Division PW4074 and PW4077 turbofan engines with 15th stage high-pressure compressor (HPC) disks, part number (P/N) 55H615, installed.

(d) Unsafe Condition

This AD results from multiple shop findings of cracked 15th stage HPC disks. We are issuing this AD to prevent cracks from propagating into the disk bolt holes, which could result in a failure of the 15th stage HPC disk, uncontained engine failure, and damage to the airplane.

(e) Compliance

Comply with this AD within the compliance times specified, unless already done. To perform the inspections, use paragraph 1.A. or 1.B. of the Accomplishment Instructions ''For Engines Installed on the Aircraft'' or 1.A. or 1.B. of the Accomplishment Instructions ''For Engines Removed from the Aircraft,'' of Pratt & Whitney Service Bulletin PW4G–112–72–309, Revision 1, dated July 1, 2010.

(1) For 15th stage HPC disks that have 9,865 or fewer cycles since new (CSN) on the effective date of this AD, remove the disk from service before accumulating 12,000 CSN.

(2) For 15th stage HPC disks that have accumulated more than 9,865 CSN on the effective date of this AD, do one of the following:

(i) Remove the disk from service at the next piece-part exposure, not to exceed 2,135 cycles-in-service (CIS) after the effective date of this AD.

(ii) Perform a borescope inspection (BSI) or eddy current inspection (ECI) of the front rail of the disk outer rim according to the following schedule:

(A) Within 2,400 cycles-since-last fluorescent penetrant inspection or ECI, or

(B) Within 1,200 cycles-since-last BSI, or

(C) Before accumulating 12,000 CSN, or

(D) Within 55 CIS after the effective date of this AD, whichever occurs latest.

(3) If the BSI from paragraph (e)(2)(ii) of this AD indicates the presence of a crack in the disk outer rim front rail, but you cannot visually confirm a crack, perform an ECI within 5 CIS after the BSI.

(4) If you confirm a crack in the front rail of the disk outer rim using any inspection method, remove the disk from service before further flight.

(f) Alternative Methods of Compliance (AMOCs)

The Manager, Engine Certification Office, may approve AMOCs for this AD. Use the procedures found in 14 CFR 39.19 to make your request.

(g) Related Information

For more information about this AD, contact Ian Dargin, Aerospace Engineer, Engine Certification Office, FAA, 12 New England Executive Park, Burlington, MA 01803; phone: 781–238–7178; fax: 781–238–7199; email: *ian.dargin@faa.gov.*

(h) Material Incorporated by Reference

(1) The Director of the Federal Register approved the incorporation by reference (IBR) of the service information listed in this paragraph under 5 U.S.C. 552(a) and 1 CFR part 51.

(2) You must use this service information as applicable to do the actions required by this AD, unless the AD specifies otherwise.

(i) Pratt & Whitney Service Bulletin PW4G–112–72–309, Revision 1, dated July 1, 2010, approved for IBR September 8, 2011.

(ii) Reserved.

(3) For Pratt & Whitney service information identified in this AD, contact Pratt & Whitney, 400 Main St., East Hartford, CT 06108; phone: 860–565–7700; fax: 860–565–1605.

(4) You may review copies of the referenced service information at the FAA, Engine & Propeller Directorate, 16 New England Executive Park, Burlington, MA. For information on the availability of this material at the FAA, call 781–238–7125.

(5) You may also review copies of the service information that is incorporated by reference at the National Archives and Records Administration (NARA). For information on the availability of this material at NARA, call 202–741–6030, or go to: *http://www.archives.gov/federal-register/cfr/ibr_locations.html.*

Issued in Burlington, Massachusetts, on June 19, 2012.

Peter A. White,

Manager, Engine & Propeller Directorate, Aircraft Certification Service.

[FR Doc. 2012–17001 Filed 7–18–12; 8:45 am]

BILLING CODE 4910–13–P

DEPARTMENT OF TRANSPORTATION

Federal Aviation Administration

14 CFR Part 71

[Docket No. FAA–2012–0621; Airspace Docket No. 12–ASO–24]

RIN 2120–AA66

Amendment of Air Traffic Service (ATS) Routes in the Vicinity of Vero Beach, FL

AGENCY: Federal Aviation Administration (FAA), DOT.

ACTION: Final rule; technical amendment.

SUMMARY: This action amends the legal descriptions of Jet Routes J–45 and J–79, and VHF omnidirectional range (VOR)

Federal airways V–3, V–51, V–159, V–225, V–295 and V–537, in the vicinity of Vero Beach, FL. The FAA is taking this action because the name of the Vero Beach, FL, VOR Tactical Air Navigation (VORTAC) facility, which is included in the descriptions of the above routes, is being changed to the Treasure VORTAC.

DATES: *Effective Dates:* 0901 UTC, September 20, 2012. The Director of the Federal Register approves this incorporation by reference action under 1 CFR part 51, subject to the annual revision of FAA Order 7400.9 and publication of conforming amendments.

FOR FURTHER INFORMATION CONTACT: Paul Gallant, Airspace, Regulations and ATC Procedures Group, Office of Airspace Services, Federal Aviation Administration, 800 Independence Avenue SW., Washington, DC 20591; telephone: (202) 267–8783.

SUPPLEMENTARY INFORMATION:

Background

Vero Beach Municipal Airport, FL, is located 4.1 NM southwest of the Vero Beach VORTAC. The airport and the VORTAC have the same name and three-letter identifier (VRB) which has caused some safety concerns. Cases have recently been observed where GPS-equipped aircraft have navigated via the VRB Airport rather than the VRB VORTAC as intended. To preclude this in the future, the name of the VORTAC is being changed to Treasure VORTAC with the new three-letter identifier ''TRV.''

The Rule

This action amends Title 14 Code of Federal Regulations (14 CFR) part 71 by amending the legal descriptions of Jet Routes J–45 and J–79; and VOR Federal Airways V–3, V–51, V–159, V–225, V–295 and V–537, to reflect the name change of one of the navigation aids used to define the routes. To eliminate confusion, and potential flight safety issues, the Vero Beach VORTAC is renamed the Treasure VORTAC and is assigned a new three-letter identifier (TRV). The VORTAC name change does not alter the current alignment of the affected routes.

Additionally, in the J–45 description, the words ''Virginia Key'' are inserted between the words ''Virginia Key, FL,'' and ''INT 014°'' to indicate that the 014° radial is referenced from the Virginia Key VOR/DME. The description of V–3 is amended by inserting the word ''Quebec'' before the words ''PQ, Canada.'' In V–51, the ''Pahokee 009°'' radial is changed to the ''Pahokee 010°'' radial. J–45, V–3 and V51 are all currently charted correctly and these changes simply correct unintended omissions from the descriptions of J–45 and V–3, and a one degree radial error in V–51.

Since this action merely involves editorial changes in the legal descriptions of the above ATS routes, and does not involve a change in the dimensions or operating requirements of the affected routes, I find that notice and public procedures under 5 U.S.C. 553(b) are unnecessary.

The FAA has determined that this regulation only involves an established body of technical regulations for which frequent and routine amendments are necessary to keep them operationally current. Therefore, this regulation: (1) Is not a ''significant regulatory action'' under Executive Order 12866; (2) is not a ''significant rule'' under DOT Regulatory Policies and Procedures (44 FR 11034; February 26, 1979); and (3) does not warrant preparation of a Regulatory Evaluation as the anticipated impact is so minimal. Since this is a routine matter that will only affect air traffic procedures and air navigation, it is certified that this rule, when promulgated, will not have a significant economic impact on a substantial number of small entities under the criteria of the Regulatory Flexibility Act.

The FAA's authority to issue rules regarding aviation safety is found in Title 49 of the United States Code. Subtitle I, Section 106 describes the authority of the FAA Administrator. Subtitle VII, Aviation Programs, describes in more detail the scope of the agency's authority.

This rulemaking is promulgated under the authority described in Subtitle VII, Part A, Subpart I, Section 40103. Under that section, the FAA is charged with prescribing regulations to assign the use of the airspace necessary to ensure the safety of aircraft and the efficient use of airspace. This regulation is within the scope of that authority as it revises the legal descriptions of jet routes and airways in the vicinity of Vero Beach, FL to eliminate confusion.

Jet Routes are published in paragraph 2004; and Domestic VOR Federal Airways are published in paragraph 6010(a), respectively, of FAA Order 7400.9V, dated August 9, 2011, and effective September 15, 2011, which is incorporated by reference in 14 CFR 71.1. The domestic Jet Routes and VOR Federal Airways listed in this document will be published subsequently in the Order.

Environmental Review

The FAA has determined that this action qualifies for categorical exclusion under the National Environmental Policy Act in accordance with FAA Order 1050.1E, Environmental Impacts: Policies and Procedures, paragraph 311a. This airspace action consists of editorial changes only and is not expected to cause any potentially significant environmental impacts, and no extraordinary circumstances exist that warrant preparation of an environmental assessment.

List of Subjects in 14 CFR Part 71

Airspace, Incorporation by reference, Navigation (air).

Adoption of the Amendment

In consideration of the foregoing, the Federal Aviation Administration amends 14 CFR part 71 as follows:

PART 71—DESIGNATION OF CLASS A, B, C, D, AND E AIRSPACE AREAS; AIR TRAFFIC SERVICE ROUTES; AND REPORTING POINTS

■ 1. The authority citation for 14 CFR part 71 continues to read as follows:

Authority: 49 U.S.C. 106(g), 40103, 40113, 40120; E.O. 10854, 24 FR 9565, 3 CFR, 1959–1963 Comp., p. 389.

§ 71.1 [Amended]

■ 2. The incorporation by reference in 14 CFR 71.1 of the Federal Aviation Administration Order 7400.9V, Airspace Designations and Reporting Points, dated August 9, 2011, and effective September 15, 2011, is amended as follows:

Paragraph 2004 Jet routes.

* * * * *

J–45 [Amended]

From Virginia Key, FL, INT Virginia Key 014° and Treasure, FL, 143° radials; Treasure; INT Treasure 330° and Ormond Beach, FL, 183° radials; Ormond Beach; Craig, FL; Alma, GA; Macon, GA; Atlanta, GA; Nashville, TN; St Louis, MO; Des Moines, IA; Sioux Falls, SD; to Aberdeen, SD.

* * * * *

J–79 [Amended]

From Key West, FL; INT Key West 038° and Dolphin, FL, 244° radials; Dolphin; Palm Beach, FL; Treasure, FL; Ormond Beach, FL; INT Ormond Beach 356° and Savannah, GA, 184° radials; INT Savannah 184° and Charleston, SC, 212° radials; Charleston; Tar River, NC; Franklin, VA; Salisbury, MD; INT Salisbury 018° and Kennedy, NY, 218° radials; Kennedy; INT Kennedy 080° and Nantucket, MA, 254° radials; INT Nantucket 254° and Marconi, MA, 205° radials; Marconi; INT Marconi 006° and Bangor, ME, 206° radials; Bangor.

Paragraph 6010(a)—Domestic VOR Federal airways.

* * * * *

V–3 [Amended]

From Key West, FL; INT Key West 083° and Dolphin, FL, 191° radials; Dolphin; Ft. Lauderdale, FL; Palm Beach, FL; Treasure, FL; Melbourne, FL; Ormond Beach, FL; Brunswick, GA; INT Brunswick 014° and Savannah, GA, 177° radials; Savannah; INT Savannah 028° and Vance, SC, 203° radials; Vance; Florence, SC; Sandhills, SC; Raleigh-Durham, NC; INT Raleigh-Durham 016° and Flat Rock, VA, 214° radials; Flat Rock; Gordonsville, VA; INT Gordonsville 331° and Martinsburg, WV, 216° radials; Martinsburg; Westminster, MD; INT Westminster 048° and Modena, PA, 258° radials; Modena; Solberg, NJ; INT Solberg 044° and Carmel, NY, 243° radials; Carmel; Hartford, CT; INT Hartford 084° and Boston, MA, 224° radials; Boston; INT Boston 014°and Pease, NH, 185° radials; Pease; INT Pease 004° and Augusta, ME, 233° radials; Augusta; Bangor, ME; INT Bangor 039° and Houlton, ME, 203° radials; Houlton; Presque Isle, ME; to Quebec, PQ, Canada. The airspace within R–2916, R–2934, R–2935, and within Canada is excluded.

* * * * *

V–51 [Amended]

From Pahokee, FL; INT Pahokee 010° and Treasure, FL, 193° radials; Treasure; INT Treasure 330° and Ormond Beach, FL, 183° radials; Ormond Beach; Craig, FL; Alma, GA; Dublin, GA; Athens, GA; INT Athens, GA, 340° and Harris, GA, 148° radials; Harris; Hinch Mountain, TN; Livingston, TN; Louisville, KY; Nabb, IN; Shelbyville, IN; INT Shelbyville 313° and Boiler, IN, 136° radials; Boiler; Chicago Heights, IL.

* * * * *

V–159 [Amended]

From Virginia Key, FL: INT Virginia Key 344° and Treasure, FL, 178° radials; Treasure; INT Treasure 318° and Orlando, FL, 140° radials; Orlando; Ocala, FL; Cross City, FL; Greenville, FL; Pecan, GA; Eufaula, AL; Tuskegee, AL; Vulcan, AL; Hamilton, AL; Holly Springs, MS; Gilmore, AR; Walnut Ridge, AR; Dogwood, MO; Springfield, MO; Napoleon, MO; INT Napoleon 005° and St. Joseph, MO, 122° radials; St. Joseph; Omaha, NE; Sioux City, IA; Yankton, SD; Mitchell, SD; to Huron, SD.

* * * * *

V–225 [Amended]

From Key West, FL, 30 miles, 72 miles, 17 AGL, Lee County, FL; La Belle, FL; Treasure, FL. The portion of V–225 E alternate outside the United States has no upper limit.

* * * * *

V–295 [Amended]

From Virginia Key, FL; INT Virginia Key 014° and Treasure, FL, 143° radials; Treasure; INT Treasure 296° and Orlando, FL, 162° radials; Orlando; Ocala, FL; Cross City, FL; to Seminole, FL. The portion outside the United States has no upper limit.

* * * * *

V–537 [Amended]

From Palm Beach, FL; INT Palm Beach 356° and Treasure, FL, 143° radials; Treasure; INT Treasure 318° and Orlando. FL, 140° radials; INT Orlando 140° and Melbourne, FL 298° radials; INT Melbourne 298° and Ocala, FL 145° radials; Ocala; Gators, FL; Greenville, FL; Moultrie, GA; to Macon, GA.

* * * * *

Issued in Washington, DC, on July 11, 2012.

Gary A. Norek,

Manager, Airspace, Regulations and ATC Procedures Group.

[FR Doc. 2012–17399 Filed 7–18–12; 8:45 am]

BILLING CODE 4910–13–P

DEPARTMENT OF TRANSPORTATION

Federal Aviation Administration

14 CFR Part 71

[Docket No. FAA–2011–1430; Airspace Docket No. 11–ACE–23]

Amendment of Class E Airspace; Grinnell, IA

AGENCY: Federal Aviation Administration (FAA), DOT.

ACTION: Final rule, technical amendment.

SUMMARY: This action amends Class E airspace at Grinnell Regional Airport, Grinnell, IA, by removing reference to the Grinnell NDB from the legal description, and amends the geographic coordinates of the airport. The Grinnell NDB has been decommissioned and is not needed as part of the airspace description. This action does not change the boundaries or operating requirements of the airspace.

DATES: *Effective date:* 0901 UTC, July 26, 2012. The Director of the Federal Register approves this incorporation by reference action under 1 CFR part 51, subject to the annual revision of FAA Order 7400.9 and publication of conforming amendments.

FOR FURTHER INFORMATION CONTACT: Scott Enander, Central Service Center, Operations Support Group, Federal Aviation Administration, Southwest Region, 2601 Meacham Blvd., Fort Worth, TX 76137; telephone 817–321–7716.

SUPPLEMENTARY INFORMATION:

The Rule

This action amends Title 14 Code of Federal Regulations (14 CFR) part 71 by removing reference to the Grinnell NDB from the legal description of Grinnell Regional Airport, Grinnell, IA, and amends the geographic coordinates of the airport to coincide with the FAA's aeronautical database. The Grinnell NDB has been decommissioned and is not needed as part of the airspace description. This is an administrative change and does not affect the boundaries, altitudes, or operating requirements of the airspace, therefore, notice and public procedures under 5 U.S.C. 553(b) are unnecessary.

The FAA has determined that this regulation only involves an established body of technical regulations for which frequent and routine amendments are necessary to keep them operationally current. Therefore, this regulation: (1) Is not a ''significant regulatory action'' under Executive Order 12866; (2) is not a ''significant rule'' under DOT Regulatory Policies and Procedures (44 FR 11034; February 26, 1979); and (3) does not warrant preparation of a regulatory evaluation as the anticipated impact is so minimal. Since this is a routine matter that will only affect air traffic procedures and air navigation, it is certified that this rule, when promulgated, will not have a significant economic impact on a substantial number of small entities under the criteria of the Regulatory Flexibility Act.

The FAA's authority to issue rules regarding aviation safety is found in Title 49 of the U.S. Code. Subtitle 1, Section 106, describes the authority of the FAA Administrator. Subtitle VII, Aviation Programs, describes in more detail the scope of the agency's authority. This rulemaking is promulgated under the authority described in Subtitle VII, Part A, Subpart I, Section 40103. Under that section, the FAA is charged with prescribing regulations to assign the use of airspace necessary to ensure the safety of aircraft and the efficient use of airspace. This regulation is within the scope of that authority as it amends controlled airspace at Grinnell Regional Airport, Grinnell, IA.

Environmental Review

The FAA has determined that this action qualifies for categorical exclusion under the National Environmental Policy Act in accordance with FAA Order 1050.1E, ''Environmental Impacts: Policies and Procedures,'' paragraph 311a. This airspace action is not expected to cause any potentially significant environmental impacts, and no extraordinary circumstances exist that warrant preparation of an environmental assessment.

List of Subjects in 14 CFR Part 71

Airspace, Incorporation by reference, Navigation (air).

Adoption of the Amendment

In consideration of the foregoing, the Federal Aviation Administration amends 14 CFR part 71 as follows:

PART 71—DESIGNATION OF CLASS A, B, C, D, AND E AIRSPACE AREAS; AIR TRAFFIC SERVICE ROUTES; AND REPORTING POINTS

■ 1. The authority citation for 14 CFR part 71 continues to read as follows:

Authority: 49 U.S.C. 106(g), 40103, 40113, 40120; E.O. 10854, 24 FR 9565, 3 CFR, 1959–1963 Comp., p. 389.

§ 71.1 [Amended]

■ 2. The incorporation by reference in 14 CFR 71.1 of the Federal Aviation Administration Order 7400.9V, Airspace Designations and Reporting Points, dated August 9, 2011, and effective September 15, 2011, is amended as follows:

Paragraph 6005 Class E airspace.

* * * * *

ACE IA E5 Grinnell, IA [Amended]

Grinnell Regional Airport, IA
(Lat. 41°42′46″ N., long. 92°44′10″ W.)

That airspace extending upward from 700 feet above the surface within a 7.6-mile radius of Grinnell Regional Airport.

Issued in Fort Worth, Texas, on June 22, 2012.

David P. Medina,

Manager, Operations Support Group, ATO Central Service Center.

[FR Doc. 2012–17287 Filed 7–18–12; 8:45 am]

BILLING CODE 4910–13–P

DEPARTMENT OF TRANSPORTATION

Federal Aviation Administration

14 CFR Part 71

Docket No. FAA–2012–0622; Airspace Docket No. 12–ANE–11

RIN 2120–AA66

Amendment of Jet Routes and VOR Federal Airways; Northeastern United States

AGENCY: Federal Aviation Administration (FAA), DOT.

ACTION: Final rule; technical amendment.

SUMMARY: This action amends the descriptions of 14 Jet Routes and 9 VOR Federal airways in the northeastern United States to reflect route changes made in Canadian airspace as part of Canada's Windsor-Toronto-Montreal airway project.

DATES: *Effective date*: 0901 UTC, September 20, 2012. The Director of the Federal Register approves this incorporation by reference action under 1 CFR part 51, subject to the annual revision of FAA Order 7400.9 and publication of conforming amendments.

FOR FURTHER INFORMATION CONTACT: Paul Gallant, Airspace, Regulations and ATC Procedures Group, Office of Airspace Services, Federal Aviation Administration, 800 Independence Avenue SW., Washington, DC 20591; telephone: (202) 267–8783.

SUPPLEMENTARY INFORMATION:

Background

NAV CANADA, which operates Canada's civil air navigation service, is implementing various changes to Canada's instrument flight rules (IFR) navigation infrastructure to enhance the efficiency of operations by taking advantage of both performance based navigation and modern avionics capabilities. The changes implemented by NAV CANADA affect parts of the descriptions of certain U.S. Jet Routes and VOR Federal airways that extend into Canadian airspace. As a result, editorial changes are required to these descriptions so that they match the changes made on the Canadian side of the border.

The Rule

This action amends Title 14 Code of Federal Regulations (14 CFR) part 71 by updating the legal descriptions of U.S. Jet Routes J–46, J–94, J–95, J–488, J–500, J–531, J–546, J–553, J–560, J–566, J–586, J–588, J–594, and J–595; and VOR Federal airways V–31, V–91, V–98, V–104, V–145, V–282, V–346, V–423 and V–522, that include segments extending into Canadian airspace. These amendments are being made so the route legal descriptions in FAA Order 7400.9, Airspace Designations and Reporting Points, match changes made by NAV CANADA to the route segments that lie within Canadian airspace and/or to reflect navigation aid name changes and editorial corrections. The specific changes are described below.

In the description of J–560, the word ''Quebec'' is inserted before ''PQ, Canada'' to correct an unintended omission. The J–16 and J–94 route descriptions previously indicated that they stopped at the U.S./Canadian border but actually they continue through London, ON to Buffalo, NY and beyond. J–566 extends to the Montreal VOR/DME instead of terminating at the border. J–95 terminates at a fix on the border instead of the Toronto VOR/DME as stated in the current description. This action reflects a large portion of J–500 within Canada that has been eliminated. The Mans, ON, VOR/DME is added in the description of J–531 to match the routing within Canada. The descriptions of J–448, J–546, J–553, J–588, J–594 and J–595 are amended to indicate their termination at the first fix within Canadian airspace. J–586's description is amended to indicate its present routing within Canadian airspace.

A one-degree change is required to the Toronto VOR/DME radial stated in the V–31 and V–522 descriptions. V–91 and V–282 no longer extend to St. Eustache, Canada, but terminate at fixes about 2.5 miles north of, and on, the United States/Canadian border, respectively. The Sterling VOR/DME has been renamed Campbellford in the description of V–98, and the St. Georges VOR/DME has been renamed Beauce in V–346. The descriptions of V–104, and V–145 have been amended to terminate at the first fix within Canadian airspace instead of extending to the Ottawa VOR/DME as currently listed. The description of V–423 is adjusted to reflect the routing within Canada to the HUXLY intersection instead of terminating on the border as currently described.

This is an administrative change to the legal descriptions of the above listed Jet Routes and VOR Federal airways to incorporate route segment changes made by NAV CANADA within Canadian airspace, and to include navigation aid name changes and editorial corrections. Therefore, notice and public procedures under 5 U.S.C. 553(b) are unnecessary.

The FAA has determined that this regulation only involves an established body of technical regulations for which frequent and routine amendments are necessary to keep them operationally current. Therefore, this regulation: (1) Is not a ''significant regulatory action'' under Executive Order 12866; (2) is not a ''significant rule'' under DOT Regulatory Policies and Procedures (44 FR 11034; February 26, 1979); and (3) does not warrant preparation of a Regulatory Evaluation as the anticipated impact is so minimal. Since this is a routine matter that will only affect air traffic procedures and air navigation, it is certified that this rule, when promulgated, will not have a significant economic impact on a substantial number of small entities under the criteria of the Regulatory Flexibility Act.

Jet Routes are published in paragraph 2004; and Domestic VOR Federal airways are published in paragraph 6010(a), of FAA Order 7400.9V, dated August 9, 2011, and effective September 15, 2011, which is incorporated by reference in 14 CFR 71.1. The Jet Routes and Domestic Federal VOR airways listed in this document will be published subsequently in the Order.

Environmental Review

The FAA has determined that this action qualifies for categorical exclusion under the National Environmental Policy Act in accordance with FAA Order 1050.1E, Environmental Impacts: Policies and Procedures, paragraph 311a. This airspace action is an editorial change that is not expected to cause any potentially significant environmental impacts, and no extraordinary circumstances exist that warrant preparation of an environmental assessment.

List of Subjects in 14 CFR Part 71

Airspace, Incorporation by reference, Navigation (air).

Adoption of the Amendment

In consideration of the foregoing, the Federal Aviation Administration amends 14 CFR part 71 as follows:

PART 71—DESIGNATION OF CLASS A, B, C, D, AND E AIRSPACE AREAS; AIR TRAFFIC SERVICE ROUTES; AND REPORTING POINTS

■ 1. The authority citation for 14 CFR part 71 continues to read as follows:

Authority: 49 U.S.C. 106(g), 40103, 40113, 40120; E.O. 10854, 24 FR 9565, 3 CFR, 1959–1963 Comp., p. 389.

§ 71.1 [Amended]

■ 2. The incorporation by reference in 14 CFR 71.1 of the Federal Aviation Administration Order 7400.9V, Airspace Designations and Reporting Points, dated August 9, 2011, and effective September 15, 2011, is amended as follows:

Paragraph 2004 Jet routes.

J–16 [Amended]

From Battle Ground, WA, via Pendleton, OR; Whitehall, MT; Billings, MT; Dupree, SD; Sioux Falls, SD; Mason City, IA; Badger, WI; Peck, MI; London, ON, Canada; Buffalo, NY; Albany, NY; to Boston, MA; excluding the airspace within Canada.

J–94 [Amended]

From Oakland, CA, via Manteca, CA; INT Manteca 047° and Mustang, NV 208° radials; to Mustang, NV; Lovelock, NV; Battle Mountain, NV; Lucin, UT; Rock Springs, WY; Scottsbluff, NE; O'Neill, NE; Fort Dodge, IA; Dubuque, IA; Northbrook, IL; Pullman, MI; Flint, MI; Peck, MI; London, ON, Canada; Buffalo, NY; Albany, NY; to Boston, MA; excluding the airspace within Canada.

J–95 [Amended]

From Deer Park, NY; INT Deer Park 308° and Binghamton, NY, 119° radials; Binghamton; Buffalo, NY; INT Buffalo 316° and Dunkirk, NY 012° radials; excluding the airspace within Canada.

J–488 [Amended]

From Watertown, NY; INT Watertown 018° and Massena, NY 300° radials; excluding the airspace within Canada.

J–500 [Amended]

From Thunder Bay, ON, via Sault Ste Marie, MI; to North Bay, ON, Canada. From Sherbrooke, PQ, Canada; Millinocket, ME; to Frederickton, NB; excluding the airspace within Canada.

J–531 [Amended]

From Buffalo, NY, via Toronto, ON, Canada; Mans, ON, Canada; Wiarton, ON, Canada; to Sault Ste Marie, MI, excluding the airspace within Canada.

J–546 [Amended]

From Peck, MI; to INT Peck 068° and Simcoe, ON, Canada 250° radials; excluding the airspace within Canada.

J–553 [Amended]

From Peck, MI, to INT Peck 057° and Mans, ON, Canada 328° radials; excluding the airspace within Canada.

J–560 [Amended]

From Plattsburgh, NY, to Quebec, PQ, Canada, excluding the airspace within Canada.

J–566 [Amended]

From Massena, NY, to Montreal, Canada; excluding the airspace within Canada.

J–586 [Amended]

From Carleton, MI, via London, ON, Canada; to Toronto, ON, Canada. From INT Ottawa, ON, Canada 185° and Massena, NY 257° radials; Massena; to INT Massena 071° and Mirabel, QC, Canada 172° radials; excluding the airspace within Canada.

J–588 [Amended]

From Sault Ste Marie, MI; to INT Sault Ste Marie 112° and Campbellford, ON, Canada 296° radials; excluding the airspace within Canada.

J–594 [Amended]

From Massena, NY; to INT Massena 252° and Watertown, NY 028° radials; excluding the airspace within Canada.

J–595 [Amended]

From INT London, ON, Canada 064° and Watertown, NY 269° radials; Watertown; Plattsburgh, NY; Bangor, ME; to St John, NB, Canada; excluding the airspace within Canada.

* * * * *

Paragraph 6010(a) Domestic VOR Federal airways.

* * * * *

V–31 [Amended]

From Patuxent River, MD; INT Patuxent River 338° and Nottingham, MD, 128° radials; Nottingham. From Baltimore, MD; INT Baltimore 004° and Harrisburg, PA, 147° radials; Harrisburg; Selinsgrove, PA; Williamsport, PA; Elmira, NY; INT Elmira 002° and Rochester, NY, 120° radials; Rochester; INT Rochester 279° and Toronto, Canada, 150° radials; Toronto; excluding the airspace within Canada.

V–91 [Amended]

From INT Calverton, NY, 180° and Hampton, NY, 223° radials; Calverton; Bridgeport, CT; Albany, NY; Glens Falls, NY; INT Glens Falls 032° and Burlington, VT, 187° radials; Burlington; Plattsburgh, NY; INT Plattsburgh 348° and St. Jean, PQ, Canada 226° radials; excluding the airspace within Canada.

V–98 [Amended]

From Dayton, OH; INT Dayton 358° and Carleton, MI, 243° radials; to INT Carleton 243° and Waterville, OH, 321° radials. From Windsor, ON, Canada; London, ON, Canada; Toronto, ON, Canada; Campbellford, ON, Canada; Massena, NY; St. Jean, PQ, Canada; excluding the airspace within Canada.

V–104 [Amended]

From INT Ottawa. ON, Canada 127° and Massena, NY, 300° radials; Massena; Plattsburgh, NY; Burlington, VT; Montpelier, VT; Berlin, NH; to Bangor, ME; excluding the airspace within Canada.

V–145 [Amended]

From Utica, NY, INT Utica 303° and Watertown, NY, 171° radials; Watertown; to INT Watertown 005° and Ottawa, ON, Canada 185° radials; excluding the airspace within Canada.

V–282 [Amended]

From Saranac Lake, NY; to INT Saranac Lake 008° and Massena, NY 080° radials; excluding the airspace within Canada.

V–346 [Amended]

From Beauce, PQ, Canada, to Millinocket, ME, excluding the airspace within Canada.

V–423 [Amended]

From Williamsport, PA, Binghamton, NY; Ithaca, NY; Syracuse, NY; Watertown, NY; to INT Watertown 018° radial and Massena, NY 270° radials; excluding the airspace within Canada.

V–522 [Amended]

From Dryer, OH; INT Dryer 049° and Erie, PA, 258° radials; Erie; Dunkirk, NY; INT Dunkirk 356° and Toronto, ON, Canada, 150° radials; to Toronto; excluding the airspace within Canada.

* * * * *

Issued in Washington, DC, on July 11, 2012.

Gary A. Norek,

Manager, Airspace, Regulations and ATC Procedures Group.

[FR Doc. 2012–17406 Filed 7–18–12; 8:45 am]

BILLING CODE 4910–13–P

DEPARTMENT OF TRANSPORTATION

Federal Aviation Administration

14 CFR Part 71

[Docket No. FAA–2012–0155; Airspace Docket No. 12–ASW–1]

Establishment of Class E Airspace; West Memphis, AR

AGENCY: Federal Aviation Administration (FAA), DOT.

ACTION: Final rule.

SUMMARY: This action establishes Class E airspace at West Memphis, AR. Separation of existing Class E airspace surrounding West Memphis Municipal Airport from the Class E airspace of Memphis International Airport, Memphis, TN, has made this action necessary to enhance the safety and management of Instrument Flight Rules (IFR) operations at the airport.

DATES: *Effective date:* 0901 UTC, September 20, 2012. The Director of the **Federal Register** approves this incorporation by reference action under 1 CFR part 51, subject to the annual revision of FAA Order 7400.9 and publication of conforming amendments.

FOR FURTHER INFORMATION CONTACT: Scott Enander, Central Service Center, Operations Support Group, Federal Aviation Administration, Southwest Region, 2601 Meacham Blvd., Fort Worth, TX 76137; telephone 817–321–7716.

SUPPLEMENTARY INFORMATION:

History

On March 26, 2012, the FAA published in the **Federal Register** a notice of proposed rulemaking (NPRM) to establish Class E airspace for the West Memphis, AR, area, creating controlled airspace at West Memphis Municipal Airport (77 FR 17363) Docket No. FAA–2012–0155. Interested parties were invited to participate in this rulemaking effort by submitting written comments on the proposal to the FAA. No comments were received. Class E airspace designations are published in paragraph 6005 of FAA Order 7400.9V dated August 9, 2011, and effective September 15, 2011, which is incorporated by reference in 14 CFR 71.1. The Class E airspace designations listed in this document will be published subsequently in the Order.

The Rule

This action amends Title 14 Code of Federal Regulations (14 CFR) part 71 by establishing Class E airspace extending upward from 700 feet above the surface at West Memphis, AR, to accommodate the separation of existing Class E airspace surrounding West Memphis Municipal Airport from the Class E airspace area of Memphis International Airport, Memphis, TN. The amendment for the existing Class E airspace surrounding Memphis International Airport, Memphis, TN, is simultaneously coordinated with this action. Controlled airspace is needed for the safety and management of IFR operations at the airport.

The FAA has determined that this regulation only involves an established body of technical regulations for which frequent and routine amendments are necessary to keep them operationally current. Therefore, this regulation: (1) Is not a ''significant regulatory action'' under Executive Order 12866; (2) is not a ''significant rule'' under DOT Regulatory Policies and Procedures (44 FR 11034; February 26, 1979); and (3) does not warrant preparation of a regulatory evaluation as the anticipated impact is so minimal. Since this is a routine matter that will only affect air traffic procedures and air navigation, it is certified that this rule, when promulgated, will not have a significant economic impact on a substantial number of small entities under the criteria of the Regulatory Flexibility Act.

The FAA's authority to issue rules regarding aviation safety is found in Title 49 of the U.S. Code. Subtitle 1, Section 106, describes the authority of the FAA Administrator. Subtitle VII, Aviation Programs, describes in more detail the scope of the agency's authority. This rulemaking is promulgated under the authority described in Subtitle VII, Part A, Subpart I, Section 40103. Under that section, the FAA is charged with prescribing regulations to assign the use of airspace necessary to ensure the safety of aircraft and the efficient use of airspace. This regulation is within the scope of that authority as it establishes controlled airspace at West Memphis Municipal Airport, West Memphis, AR.

Environmental Review

The FAA has determined that this action qualifies for categorical exclusion under the National Environmental Policy Act in accordance with FAA Order 1050.1E, ''Environmental Impacts: Policies and Procedures,'' paragraph 311a. This airspace action is not expected to cause any potentially significant environmental impacts, and no extraordinary circumstances exist that warrant preparation of an environmental assessment.

List of Subjects in 14 CFR Part 71

Airspace, Incorporation by reference, Navigation (air).

Adoption of the Amendment

In consideration of the foregoing, the Federal Aviation Administration amends 14 CFR part 71 as follows:

PART 71—DESIGNATION OF CLASS A, B, C, D, AND E AIRSPACE AREAS; AIR TRAFFIC SERVICE ROUTES; AND REPORTING POINTS

■ 1. The authority citation for 14 CFR part 71 continues to read as follows:

Authority: 49 U.S.C. 106(g), 40103, 40113, 40120; E.O. 10854, 24 FR 9565, 3 CFR, 1959–1963 Comp., p. 389.

§ 71.1 [Amended]

■ 2. The incorporation by reference in 14 CFR 71.1 of the Federal Aviation Administration Order 7400.9V, Airspace Designations and Reporting Points, dated August 9, 2011, and effective September 15, 2011, is amended as follows:

Paragraph 6005 Class E airspace areas extending upward from 700 feet or more above the surface.

* * * * *

ASW AR E5 West Memphis, AR [New]

West Memphis Municipal Airport, AR
(Lat. 35°08′06″ N., long. 90°14′04″ W.)

That airspace extending upward from 700 feet above the surface within a 6.5-mile radius of West Memphis Municipal Airport.

Issued in Fort Worth, Texas, on June 13, 2012.

David P. Medina,

Manager, Operations Support Group, ATO Central Service Center.

[FR Doc. 2012–17362 Filed 7–18–12; 8:45 am]

BILLING CODE 4910–13–P

DEPARTMENT OF TRANSPORTATION

Federal Aviation Administration

14 CFR Part 71

[Docket No. FAA–2012–0301; Airspace Docket No. 12–AEA–3]

Revocation of Class E Airspace; Lloydsville, PA, and Amendment of Class D and E Airspace; Latrobe, PA

AGENCY: Federal Aviation Administration (FAA), DOT.

ACTION: Final rule.

SUMMARY: This action removes Class E airspace listed at Lloydsville, PA, for Latrobe Hospital Heliport (old name), and incorporates Excela Health Latrobe Hospital Heliport (new name) onto Class

E airspace at Latrobe, PA. Also, this action amends Class D and E airspace at Latrobe, PA, as new Standard Instrument Approach Procedures have been developed at Arnold Palmer Regional Airport. The geographic coordinates for both the heliport and the airport are updated. This action enhances the safety and airspace management of Instrument Flight Rules (IFR) operations in the Latrobe, PA, area. This action also recognizes the airport name change to Arnold Palmer Regional Airport.

DATES: Effective 0901 UTC, September 20, 2012. The Director of the Federal Register approves this incorporation by reference action under title 1, Code of Federal Regulations, part 51, subject to the annual revision of FAA Order 7400.9 and publication of conforming amendments.

FOR FURTHER INFORMATION CONTACT: John Fornito, Operations Support Group, Eastern Service Center, Federal Aviation Administration, P.O. Box 20636, Atlanta, Georgia 30320; telephone (404) 305–6364.

SUPPLEMENTARY INFORMATION:

History

On May 11, 2012, the FAA published in the **Federal Register** a notice of proposed rulemaking to remove Class E airspace in the Lloydsville, PA, and amend Class D and E airspace in Latrobe, PA (77 FR 27667). Interested parties were invited to participate in this rulemaking effort by submitting written comments on the proposal to the FAA. No comments were received. Class D and E airspace designations are published in Paragraphs 5000, 6004, and 6005, respectively, of FAA Order 7400.9V, dated August 9, 2011, and effective September 15, 2011, which is incorporated by reference in 14 CFR 71.1. The Class D and E airspace designation listed in this document will be published subsequently in the Order.

The Rule

This amendment to Title 14, Code of Federal Regulations (14 CFR) part 71 removes Class E airspace extending upward from 700 feet above the surface in Lloydsville, PA, for Latrobe Hospital Heliport, and incorporate Excela Health Latrobe Hospital Heliport, formerly Latrobe Hospital Heliport, into existing Class E airspace extending upward from 700 feet above the surface, at Latrobe, PA. Class D airspace, Class E surface airspace, and Class E airspace extending upward from 700 feet above the surface are amended to support new standard instrument approach procedures at Arnold Palmer Regional Airport, Latrobe, PA, formerly Westmoreland County Airport. The geographic coordinates for the heliport and the airport are adjusted to coincide with the FAA's aeronautical database.

The FAA has determined that this regulation only involves an established body of technical regulations for which frequent and routine amendments are necessary to keep them operationally current, is non-controversial and unlikely to result in adverse or negative comments. It, therefore, (1) is not a ''significant regulatory action'' under Executive Order 12866; (2) is not a ''significant rule'' under DOT Regulatory Policies and Procedures (44 FR 11034; February 26, 1979); and (3) does not warrant preparation of a Regulatory Evaluation as the anticipated impact is so minimal. Since this is a routine matter that will only affect air traffic procedures and air navigation, it is certified that this rule, when promulgated, will not have a significant economic impact on a substantial number of small entities under the criteria of the Regulatory Flexibility Act.

The FAA's authority to issue rules regarding aviation safety is found in Title 49 of the United States Code. Subtitle I, Section 106 describes the authority of the FAA Administrator. Subtitle VII, Aviation Programs, describes in more detail the scope of the agency's authority.

This rulemaking is promulgated under the authority described in Subtitle VII, Part A, Subpart I, Section 40103. Under that section, the FAA is charged with prescribing regulations to assign the use of airspace necessary to ensure the safety of aircraft and the efficient use of airspace. This regulation is within the scope of that authority as it removes controlled airspace In Lloydsville, PA and amends controlled airspace in Latrobe, PA.

Environmental Review

The FAA has determined that this action qualifies for categorical exclusion under the National Environmental Policy Act in accordance with FAA Order 1050.1E, ''Environmental Impacts: Policies and Procedures,'' paragraph 311a. This airspace action is not expected to cause any potentially significant environmental impacts, and no extraordinary circumstances exist that warrant preparation of an environmental assessment.

Lists of Subjects in 14 CFR Part 71

Airspace, Incorporation by reference, Navigation (Air).

Adoption of the Amendment

In consideration of the foregoing, the Federal Aviation Administration amends 14 CFR part 71 as follows:

PART 71—DESIGNATION OF CLASS A, B, C, D, AND E AIRSPACE AREAS; AIR TRAFFIC SERVICE ROUTES; AND REPORTING POINTS

■ 1. The authority citation for part 71 continues to read as follows:

Authority: 49 U.S.C. 106(g); 40103, 40113, 40120; E.O. 10854, 24 FR 9565, 3 CFR, 1959–1963 Comp., p. 389.

§ 71.1 [Amended]

■ 2. The incorporation by reference in 14 CFR 71.1 of Federal Aviation Administration Order 7400.9V, Airspace Designations and Reporting Points, dated August 9, 2011, effective September 15, 2011, is amended as follows:

* * * * *

Paragraph 5000 Class D airspace.

AEA PA D Latrobe, PA [Amended]

Arnold Palmer Regional Airport, Latrobe, PA (Lat. 40°16′29″ N., long. 79°24′24″ W.)

That airspace extending upward from the surface to and including 3,700 feet MSL within a 5-mile radius of Arnold Palmer Regional Airport. This Class D airspace area is effective during the specific dates and times established in advance by a Notice to Airmen. The effective date and time will thereafter be continuously published in the Airport/Facility Directory.

Paragraph 6004 Class E Airspace Designated as an Extension to a Class D Surface Area.

* * * * *

AEA PA E4 Latrobe, PA [Amended]

Arnold Palmer Regional Airport, Latrobe, PA (Lat. 40°16′2″ N., long. 79°24′24″ W.)

That airspace extending upward from the surface of Arnold Palmer Regional Airport within the 045° bearing from the airport clockwise to the 210° bearing, extending from the 5-mile radius of the airport to 10 miles southwest. This Class E airspace area shall be effective during the specific dates and times established in advance by a Notice to Airmen. The effective date and time will thereafter be continuously published in the Airport/Facility Directory.

Paragraph 6005 Class E airspace areas extending upward from 700 feet or more above the surface of the earth.

* * * * *

AEA PA E5 Lloydsville, PA [Removed]

AEA PA E5 Latrobe, PA [Amended]

Arnold Palmer Regional Airport, Latrobe, PA Lat. 40°16′29″ N., long. 79°24′24″ W.)

Excela Health Latrobe Hospital Heliport (Lat. 40°19′13″ N., long. 79°23′37″ W.)

That airspace extending upward from 700 feet above the surface within a 12-mile radius of Arnold Palmer Regional Airport, and within a 6-mile radius of Excela Health Latrobe Hospital Heliport.

Issued in College Park, Georgia, on July 9, 2012.

Barry A. Knight,

Manager, Operations Support Group Eastern Service Center, Air Traffic Organization.

[FR Doc. 2012–17469 Filed 7–18–12; 8:45 am]

BILLING CODE 4910–13–P

DEPARTMENT OF HOMELAND SECURITY

Coast Guard

33 CFR Part 117

[Docket No. USCG–2012–0601]

Drawbridge Operation Regulations; Niantic River, Niantic, CT

AGENCY: Coast Guard, DHS.

ACTION: Notice of temporary deviation from regulations.

SUMMARY: The Commander, First Coast Guard District, has issued a temporary deviation from the regulation governing the operation of the Amtrak Railroad Bridge across the Niantic River, mile 0.0, at Niantic, Connecticut. The deviation allows the bridge to remain in the closed position for a 48 hour period and for periodic overnight closures to facilitate pier alignment and completion of work on machinery and the lift span.

DATES: This deviation is effective from 9 p.m. on July 15, 2012 through 6 a.m. on August 22, 2012.

ADDRESSES: Documents mentioned in this preamble as being available in the docket are part of docket USCG–2012–0601 and are available online at *www.regulations.gov*, inserting USCG–2012–0601 in the ''Keyword'' and then clicking ''Search''. They are also available for inspection or copying at the Docket Management Facility (M–30), U.S. Department of Transportation, West Building Ground Floor, Room W12–140, 1200 New Jersey Avenue SE., Washington, DC 20590, between 9 a.m. and 5 p.m., Monday through Friday, except Federal holidays.

FOR FURTHER INFORMATION CONTACT: If you have questions on this rule, call or email Ms. Judy Leung-Yee, Project Officer, First Coast Guard District, telephone (212) 668–7165, email *judy.k.leung-yee@uscg.mil.* If you have questions on viewing the docket, call Renee V. Wright, Program Manager, Docket Operations, telephone 202–366–9826.

SUPPLEMENTARY INFORMATION: The Amtrak Railroad Bridge, across the Niantic River, mile 0.0, at Niantic, Connecticut, has a vertical clearance in the closed position of 16 feet at mean high water. The drawbridge operation regulations are listed at 33 CFR 117.215(a).

The waterway users are recreational vessels and seasonal fishing boats.

The operator of the bridge, National Passenger Railroad Corporation (Amtrak), requested a temporary deviation from the regulations to facilitate pier alignment and completion of machinery installation at the new Niantic River RR Bridge.

The Coast Guard previously issued a temporary deviation to Amtrak dated May 2, 2012, USCG–2012–0305, to allow the bridge to remain in the closed position during the hours of 11 p.m. until 6 a.m., Monday through Thursday, beginning May 15, 2012 until August 15, 2012 in order to facilitate completion of machinery installation and lift span work at the new railroad bridge. However, in May 2012, the contractor discovered a minor shift in the bascule pier, causing a misalignment of the new bridge.

Until the pier alignment problem is resolved, the work anticipated to be completed during the closures authorized under the May 2, 2012 temporary deviation cannot be done.

In order to complete all the remaining work and correct the pier alignment problem a 48 hour bridge closure from 9 p.m. July 15 to 9 p.m. July 17, 2012 was determined to be necessary and the best time to conduct work in order to bring the bridge into proper alignment. Once the alignment is completed machinery installation and lift span work may continue.

This scenario was presented to the Amtrak Annual Boaters Meeting on June 7, 2012. The waterway users and Sector Long Island Sound have all concurred with the bridge closure period as the optimal time for the closure so that completion of the bridge replacement project is not impacted. Additionally, periodic overnight closures with the possibility of two openings after advance notice was agreed upon.

Under this temporary deviation the Amtrak Railroad Bridge may remain in the closed position from 9 p.m. on July 15, 2012 through 9 p.m. on July 17, 2012. In addition, the bridge may remain in the closed position during the hours of 10 p.m. until 6 a.m., Sunday through Wednesday, each week beginning July 22, 2012 until August 22, 2012 except that openings will be granted at midnight and 4:30 a.m. with a 2 hour advance notice. This schedule will be published in the Local Notice to Mariners, and via broadcast notice to mariners as necessary.

Vessels that can pass under the bridge in the closed position may do so at all times.

The waterway users were advised of the requested bridge closure and offered no objection.

In accordance with 33 CFR 117.35(e), the bridge must return to its regular operating schedule immediately at the end of the designated time periods. This deviation from the operating regulations is authorized under 33 CFR 117.35.

Dated: July 9, 2012.

Gary Kassof,

Bridge Program Manager, First Coast Guard District.

[FR Doc. 2012–17579 Filed 7–18–12; 8:45 am]

BILLING CODE 9110–04–P

DEPARTMENT OF HOMELAND SECURITY

Coast Guard

33 CFR Part 117

[Docket No. USCG–2012–0305]

Drawbridge Operation Regulations; Niantic River, Niantic, CT

AGENCY: Coast Guard, DHS.

ACTION: Notice canceling temporary deviation from regulations.

SUMMARY: The Coast Guard is canceling the temporary deviation published on May 2, 2012 (77 FR 25889) concerning the operation of the Amtrak Railroad Bridge across the Niantic River, mile 0.0, at Niantic, Connecticut.

DATES: The temporary deviation published on May 2, 2012 (77 FR 25889) is cancelled as of July 14, 2012.

ADDRESSES: The docket for this cancelled deviation is available for inspection or copying at the Docket Management Facility (M–30), U.S. Department of Transportation, West Building Ground Floor, Room W12–140, 1200 New Jersey Avenue SE., Washington, DC 20590, between 9 a.m. and 5 p.m., Monday through Friday, except Federal holidays. You may also find this docket on the Internet by going to *http://www.regulations.gov,* inserting USCG–2012–0305 in the ''Keyword'' box and then clicking ''Search''.

FOR FURTHER INFORMATION CONTACT: Ms. Judy Leung-Yee, Project Officer, First Coast Guard District, telephone (212) 668–7165, email *judy.k.leung-yee@uscg.mil.*

SUPPLEMENTARY INFORMATION:

Basis and Purpose

On May 2, 2012, we published a temporary deviation entitled ''Drawbridge Operations: Niantic River, Niantic, CT'' in the **Federal Register** (77 FR 25889) for the Amtrak Railroad Bridge, across the Niantic River, mile 0.0, at Niantic, Connecticut. This deviation from the operating regulations was authorized under 33 CFR 117.35.

Cancellation

The Coast Guard previously issued a temporary deviation to Amtrak published on May 2, 2012 (77 FR 25889) to allow their bridge to remain in the closed position from 11 p.m. through 6 a.m., Monday through Thursday, beginning May 15, 2012 until August 15, 2012. The temporary deviation was necessary to facilitate completion of machinery installation and lift span work at the new railroad bridge.

In May 2012, the contractor building the bridge discovered a minor shift in the bascule pier, causing a misalignment of the new bridge. Until the pier alignment problem is resolved, the work anticipated to be completed during the closures authorized under the May 2, 2012 (77 FR 25889) temporary deviation could not be completed.

In order to complete all the remaining work and correct the pier alignment problem a new temporary deviation is required authorizing a 48 hour bridge closure from 9 p.m. July 15 to 9 p.m. July 17, 2012 and a series of overnight closures between July 22 and August 22, 2012.

As a result of all the above information it was determined that the temporary deviation published on May 2, 2012 (77 FR 25889) must be cancelled on July 14, 2012.

Dated: July 9, 2012.

Gary Kassof,

Bridge Program Manager, First Coast Guard District.

[FR Doc. 2012–17580 Filed 7–18–12; 8:45 am]

BILLING CODE 9110–04–P

DEPARTMENT OF HOMELAND SECURITY

Coast Guard

33 CFR Part 117

[Docket No. USCG–2012–0547]

Drawbridge Operation Regulations; Saugus River, Lynn and Revere, MA

AGENCY: Coast Guard, DHS.

ACTION: Notice of temporary deviation from regulations.

SUMMARY: The Commander, First Coast Guard District, has issued a temporary deviation from the regulation governing the operation of the General Edwards Bridge, mile 1.7, across the Saugus River between Lynn and Revere, Massachusetts. The deviation is necessary to facilitate major bridge rehabilitation construction. This deviation allows the bridge to remain in the closed position during the rehabilitation of the electrical and mechanical components that lift the bridge spans.

DATES: This deviation is effective from September 4, 2012 through February 27, 2013.

ADDRESSES: Documents mentioned in this preamble as being available in the docket are part of docket USCG–2012–0547 and are available online at *www.regulations.gov,* inserting USCG–2012–0547 in the ''Keyword'' and then clicking ''Search''. They are also available for inspection or copying at the Docket Management Facility (M–30), U.S. Department of Transportation, West Building Ground Floor, Room W12–140, 1200 New Jersey Avenue SE., Washington, DC 20590, between 9 a.m. and 5 p.m., Monday through Friday, except Federal holidays.

FOR FURTHER INFORMATION CONTACT: If you have questions on this rule, call or email Mr. John W. McDonald, Project Officer, First Coast Guard District, *john.w.mcdonald@uscg.mil,* or telephone 617–223–8364. If you have questions on viewing the docket, call Renee V. Wright, Program Manager, Docket Operations, telephone 202–366–9826.

SUPPLEMENTARY INFORMATION: The General Edwards Bridge, across the Saugus River, mile 1.7, between Lynn and Revere, Massachusetts, has a vertical clearance in the closed position of 27 feet at mean high water and 36 feet at mean low water. The drawbridge operation regulations are listed at 33 CFR 117.618(b).

The waterway users are recreational vessels of various sizes. During the non-boating season the bridge rarely opens since the recreational vessels that transit this waterway are normally in winter storage. The bridge has opened five times since 2010 during the winter months.

The owner of the bridge, Massachusetts Department of Transportation, requested a temporary deviation from the regulations to help facilitate rehabilitation of the electrical and mechanical components that lift the opening spans.

Under this temporary deviation the General Edwards Bridge may remain in the closed position from September 4, 2012 through February 27, 2013.

Vessels that can pass under the bridge in the closed position may do so at any time.

The Coast Guard believes that this temporary deviation meets the reasonable needs of navigation because the recreational users that normally use this bridge are recreational vessels that do not operate during the winter months when this deviation will be in effect.

In accordance with 33 CFR 117.35(e), the bridge must return to its regular operating schedule immediately at the end of the designated time period. This deviation from the operating regulations is authorized under 33 CFR 117.35.

Dated: June 29, 2012.

Gary Kassof,

Bridge Program Manager, First Coast Guard District.

[FR Doc. 2012–17577 Filed 7–18–12; 8:45 am]

BILLING CODE 9110–04–P

ENVIRONMENTAL PROTECTION AGENCY

40 CFR Part 180

[EPA–HQ–OPP–2011–0300; FRL–9354–9]

Difenoconazole; Pesticide Tolerances

AGENCY: Environmental Protection Agency (EPA).

ACTION: Final rule.

SUMMARY: This regulation establishes tolerances for residues of difenoconazole in or on multiple commodities identified and discussed in this document and amends the established tolerances in or on vegetable, tuberous and corm, subgroup 1C and potato, processed waste. In addition, this regulation removes established tolerances for certain commodities/groups superseded by this action. The Interregional Research Project Number 4 (IR–4) requested these tolerances under the Federal Food, Drug, and Cosmetic Act (FFDCA).

DATES: This regulation is effective July 19, 2012. Objections and requests for hearings must be received on or before September 17, 2012, and must be filed in accordance with the instructions provided in 40 CFR part 178 (see also Unit I.C. of the **SUPPLEMENTARY INFORMATION**).

ADDRESSES: The docket for this action, identified by docket identification (ID) number EPA–HQ–OPP–2011–0300, is available at *http://www.regulations.gov* or at the OPP Docket in the Environmental Protection Agency Docket Center (EPA/DC), located in EPA

West, Rm. 3334, 1301 Constitution Ave. NW., Washington, DC 20460–0001. The Public Reading Room is open from 8:30 a.m. to 4:30 p.m., Monday through Friday, excluding legal holidays. The telephone number for the Public Reading Room is (202) 566–1744, and the telephone number for the OPP Docket is (703) 305–5805. Please review the visitor instructions and additional information about the docket available at *http://www.epa.gov/dockets.*

FOR FURTHER INFORMATION CONTACT: Sidney Jackson, Registration Division (7505P), Office of Pesticide Programs, Environmental Protection Agency, 1200 Pennsylvania Ave. NW., Washington, DC 20460–0001; telephone number: (703) 305–7610; email address: *jackson.sidney@epa.gov.*

SUPPLEMENTARY INFORMATION:

I. General Information

A. Does this action apply to me?

You may be potentially affected by this action if you are an agricultural producer, food manufacturer, or pesticide manufacturer. Potentially affected entities may include, but are not limited to those engaged in the following activities:

- Crop production (NAICS code 111).
- Animal production (NAICS code 112).
- Food manufacturing (NAICS code 311).
- Pesticide manufacturing (NAICS code 32532).

This listing is not intended to be exhaustive, but rather to provide a guide for readers regarding entities likely to be affected by this action. Other types of entities not listed in this unit could also be affected. The North American Industrial Classification System (NAICS) codes have been provided to assist you and others in determining whether this action might apply to certain entities. If you have any questions regarding the applicability of this action to a particular entity, consult the person listed under **FOR FURTHER INFORMATION CONTACT**.

B. How can I get electronic access to other related information?

You may access a frequently updated electronic version of EPA's tolerance regulations at 40 CFR part 180 through the Government Printing Office's e-CFR site at *http://ecfr.gpoaccess.gov/cgi/t/text/text-idx?&c=ecfr&tpl=/ecfrbrowse/Title40/40tab_02.tpl.*

C. How can I file an objection or hearing request?

Under FFDCA section 408(g), 21 U.S.C. 346a, any person may file an objection to any aspect of this regulation and may also request a hearing on those objections. You must file your objection or request a hearing on this regulation in accordance with the instructions provided in 40 CFR part 178. To ensure proper receipt by EPA, you must identify docket ID number EPA–HQ–OPP–2011–0300 in the subject line on the first page of your submission. All objections and requests for a hearing must be in writing, and must be received by the Hearing Clerk on or before September 17, 2012. Addresses for mail and hand delivery of objections and hearing requests are provided in 40 CFR 178.25(b).

In addition to filing an objection or hearing request with the Hearing Clerk as described in 40 CFR part 178, please submit a copy of the filing that does not contain any CBI for inclusion in the public docket. Information not marked confidential pursuant to 40 CFR part 2 may be disclosed publicly by EPA without prior notice. Submit a copy of your non-CBI objection or hearing request, identified by docket ID number EPA–HQ–OPP–2011–0300, by one of the following methods:

- *Federal eRulemaking Portal: http://www.regulations.gov.* Follow the online instructions for submitting comments. Do not submit electronically any information you consider to be Confidential Business Information (CBI) or other information whose disclosure is restricted by statute.
- *Mail:* OPP Docket, Environmental Protection Agency Docket Center (EPA/DC), Mail Code: 28221T, 1200 Pennsylvania Ave. NW., Washington, DC 20460–0001.
- *Hand Delivery:* To make special arrangements for hand delivery or delivery of boxed information, please follow the instructions at *http://www.epa.gov/dockets/contacts.htm.* Additional instructions on commenting or visiting the docket, along with more information about dockets generally, is available at *http://www.epa.gov/dockets.*

II. Summary of Petitioned-For Tolerance

In the **Federal Register** of July 20, 2011 (76 FR 43231) (FRL–8880–1), EPA issued a notice pursuant to FFDCA section 408(d)(3), 21 U.S.C. 346a(d)(3), announcing the filing of a pesticide petition (PP 1E7852) by Interregional Research Project Number 4 (IR–4), IR–4 Headquarters, 500 College Road East, Suite 201 W, Princeton, NJ 08540. The petition requested that 40 CFR 180.475 be amended by establishing tolerances for residues of the fungicide, difenoconazole, 1-[2-[2-chloro-4-(4-chlorophenoxy)phenyl]-4-methyl-1,3-dioxolan-2-ylmethyl]-1*H*-1,2,4,-triazole, including its metabolites and degradates in or on vegetable, fruiting, group 8–10 at 0.6 ppm; fruit, citrus, group 10–10 at 0.6 ppm; fruit, pome, group 11–10 at 1.0 ppm; and berry, low growing, subgroup 13–07G, except cranberry at 2.5 ppm; and by amending the established tolerance in or on vegetable, tuberous and corm, subgroup 1C at 0.01 ppm to raise to 4.0 ppm. In addition, the petition proposes to remove established tolerances in or on the raw agricultural commodities: Potato, processed waste at 0.04 ppm; vegetables, fruiting, group 8 at 0.6 ppm; fruit, citrus, group 10 at 0.6 ppm; fruit, pome, group 11 at 1.0 ppm; and strawberry at 2.5 ppm. That notice referenced a summary of the petition prepared by Syngenta Crop Protection, Inc., the registrant, which is available in the docket, *http://www.regulations.gov.* There were no comments received in response to the notice of filing.

Based upon review of the data supporting this petition, EPA denied the Petitioner's request to remove the established tolerance on potato, processed waste at 0.04 ppm. Moreover, the Agency determined that the tolerance needs to be raised and the commodity terminology changed to potato, wet peel at 7.3 ppm. The Agency's rationale for these decisions is outlined in Unit IV.C.

III. Aggregate Risk Assessment and Determination of Safety

Section 408(b)(2)(A)(i) of FFDCA allows EPA to establish a tolerance (the legal limit for a pesticide chemical residue in or on a food) only if EPA determines that the tolerance is ''safe.'' Section 408(b)(2)(A)(ii) of FFDCA defines ''safe'' to mean that ''there is a reasonable certainty that no harm will result from aggregate exposure to the pesticide chemical residue, including all anticipated dietary exposures and all other exposures for which there is reliable information.'' This includes exposure through drinking water and in residential settings, but does not include occupational exposure. Section 408(b)(2)(C) of FFDCA requires EPA to give special consideration to exposure of infants and children to the pesticide chemical residue in establishing a tolerance and to ''ensure that there is a reasonable certainty that no harm will result to infants and children from aggregate exposure to the pesticide chemical residue. * * *''

Consistent with FFDCA section 408(b)(2)(D), and the factors specified in FFDCA section 408(b)(2)(D), EPA has reviewed the available scientific data and other relevant information in

support of this action. EPA has sufficient data to assess the hazards of and to make a determination on aggregate exposure for difenoconazole including exposure resulting from the tolerances established by this action. EPA's assessment of exposures and risks associated with difenoconazole follows.

A. Toxicological Profile

EPA has evaluated the available toxicity data and considered their validity, completeness, and reliability as well as the relationship of the results of the studies to human risk. EPA has also considered available information concerning the variability of the sensitivities of major identifiable subgroups of consumers, including infants and children.

Difenoconazole possesses low acute toxicity by the oral, dermal and inhalation routes of exposure. It is not an eye or skin irritant and is not a sensitizer. Subchronic and chronic studies with difenoconazole in mice and rats showed decreased body weights, decreased body weight gains and effects on the liver. In an acute neurotoxicity study in rats, reduced fore-limb grip strength was observed on day 1 in males and clinical signs of neurotoxicity were observed in females at the limit dose of 2,000 milligrams/kilograms (mg/kg). In a subchronic neurotoxicity study in rats, decreased hind limb strength was observed in males only at the mid- and high-doses. However, the effects observed in acute and subchronic neurotoxicity studies are transient, and the dose-response is well characterized with identified no-observed-adverse-effects-levels (NOAELs). No systemic toxicity was observed at the limit dose in the most recently submitted 28-day rat dermal toxicity study.

There is no concern for increased qualitative and/or quantitative susceptibility after exposure to difenoconazole in developmental toxicity studies in rats and rabbits, and a reproduction study in rats as fetal/offspring effects occurred in the presence of maternal toxicity. There are no indications in the available studies that organs associated with immune function, such as the thymus and spleen, are affected by difenoconazole.

EPA is using the non-linear (Reference Dose) approach to assess cancer risk. Difenoconazole is not mutagenic, and no evidence of carcinogenicity was seen in rats. Evidence for carcinogenicity was seen in mice (liver tumors), but statistically significant carcinomas tumors were only induced at excessively-high doses. Adenomas (benign tumors) and liver necrosis only were seen at 300 parts per million (ppm) (46 and 58 mg/kg/day in males and females, respectively). Based on excessive toxicity observed at the two highest doses in the study, the presence of only benign tumors and necrosis at the mid-dose, the absence of tumors at the study's lower doses, and the absence of genotoxic effects, EPA has concluded that the chronic point of departure (POD) from the chronic mouse study will be protective of any cancer effects. The POD from this study is the NOAEL of 30 ppm (4.7 and 5.6 mg/kg/day in males and females, respectively) which was chosen based upon only those biological endpoints which were relevant to tumor development (i.e., hepatocellular hypertrophy, liver necrosis, fatty changes in the liver and bile stasis).

Specific information on the studies received and the nature of the adverse effects caused by difenoconazole as well as the no-observed-adverse-effect-level (NOAEL) and the lowest-observed-adverse-effect-level (LOAEL) from the toxicity studies can be found at *http://www.regulations.gov* in document ''Difenoconazole. Human Health Risk Assessment for Postharvest Use on Tuberous and Corm Vegetables Subgroup 1C. and Low growing Berry Subgroup 13–07G, Except Cranberry,'' dated May 30, 2012 at p. 34 in docket ID number EPA–HQ–OPP–2011–0300.

B. Toxicological POD/Levels of Concern

Once a pesticide's toxicological profile is determined, EPA identifies toxicological POD and levels of concern (LOC) to use in evaluating the risk posed by human exposure to the pesticide. For hazards that have a threshold below which there is no appreciable risk, the toxicological POD is used as the basis for derivation of reference values for risk assessment. PODs are developed based on a careful analysis of the doses in each toxicological study to determine the dose at which no adverse effects are observed (the NOAEL) and the lowest dose at which adverse effects of concern are identified (the LOAEL). Uncertainty/safety factors are used in conjunction with the POD to calculate a safe exposure level—generally referred to as a population-adjusted dose (PAD) or a reference dose (RfD)—and a safe margin of exposure (MOE). For non-threshold risks, the Agency assumes that any amount of exposure will lead to some degree of risk. Thus, the Agency estimates risk in terms of the probability of an occurrence of the adverse effect expected in a lifetime. For more information on the general principles EPA uses in risk characterization and a complete description of the risk assessment process, see *http://www.epa.gov/pesticides/factsheets/riskassess.htm.*

A summary of the toxicological endpoints for difenoconazole used for human risk assessment is discussed in Unit III. B. of the final rule published in the **Federal Register** of June 15, 2011 (76 FR 34877) (FRL–8876–4).

C. Exposure Assessment

1. *Dietary exposure from food and feed uses.* In evaluating dietary exposure to difenoconazole, EPA considered exposure under the petitioned-for tolerances as well as all existing difenoconazole tolerances in 40 CFR 180.475. EPA assessed dietary exposures from difenoconazole in food as follows:

i. *Acute exposure.* Quantitative acute dietary exposure and risk assessments are performed for a food-use pesticide, if a toxicological study has indicated the possibility of an effect of concern occurring as a result of a 1-day or single exposure.

Such effects were identified for difenoconazole. In estimating acute dietary exposure, EPA used food consumption information from the United States Department of Agriculture (USDA) 1994–1996 and 1998 Nationwide Continuing Surveys of Food Intake by Individuals (CSFII). As to residue levels in food, EPA used an unrefined acute analysis for food and water that assumed tolerance-level residues, 100 percent crop treated (PCT), and the available empirical or dietary exposure evaluation model (DEEM™ version 7.81) default processing factors.

ii. *Chronic exposure.* In conducting the chronic dietary exposure assessment EPA used the food consumption data from the USDA 1994–1996 and 1998 CSFII. As to residue levels in food, a refined chronic analysis for food and water assumed tolerance-level residues for some commodities, average field trial residues for the majority of commodities, the available empirical or DEEM™ version 7.81 default processing factors, and 100 PCT.

iii. *Cancer.* Based on the data summarized in Unit III.A., EPA has concluded that a nonlinear RfD approach is appropriate for assessing cancer risk to difenoconazole. A separate quantitative cancer exposure assessment is unnecessary since the NOAEL (4.7 and 5.6 mg/kg/day in males and females, respectively) to assess cancer risk is higher than the NOAEL (0.96 and 1.27 mg/kg/day in males and females, respectively) to assess chronic risks and exposure for the purpose of assessing cancer risk would be no

higher than chronic exposure. Therefore, the chronic dietary risk estimate will be protective of potential cancer risk.

iv. *Anticipated residue and PCT information.* EPA did not use PCT information in the dietary assessment for difenoconazole and assumed 100 PCT. EPA used anticipated residues in the form of average field trial residues for the majority of commodities in the chronic dietary exposure assessment.

Section 408(b)(2)(E) of FFDCA authorizes EPA to use available data and information on the anticipated residue levels of pesticide residues in food and the actual levels of pesticide residues that have been measured in food. If EPA relies on such information, EPA must require pursuant to FFDCA section 408(f)(1) that data be provided 5 years after the tolerance is established, modified, or left in effect, demonstrating that the levels in food are not above the levels anticipated. For the present action, EPA will issue such data call-ins as are required by FFDCA section 408(b)(2)(E) and authorized under FFDCA section 408(f)(1). Data will be required to be submitted no later than 5 years from the date of issuance of these tolerances.

2. *Dietary exposure from drinking water.* The Agency used screening level water exposure models in the dietary exposure analysis and risk assessment for difenoconazole in drinking water. These simulation models take into account data on the physical, chemical, and fate/transport characteristics of difenoconazole. Further information regarding EPA drinking water models used in pesticide exposure assessment can be found at *http://www.epa.gov/oppefed1/models/water/index.htm.*

Based on the Pesticide Root Zone Model/Exposure Analysis Modeling System (PRZM/EXAMS) for registered and proposed new uses and Screening Concentration in Ground Water (SCI–GROW) models, the estimated drinking water concentrations (EDWCs) of difenoconazole for acute exposures are estimated to be 17.4 parts per billion (ppb) for surface water and 0.0128 ppb for ground water.

For chronic exposures for non-cancer assessments are estimated to be 11.8 ppb for surface water and 0.0128 ppb for ground water.

Modeled estimates of drinking water concentrations were directly entered into the dietary exposure model.

For acute dietary risk assessment, the water concentration value of 17.4 ppb was used to assess the contribution to drinking water.

For chronic dietary risk assessment, the water concentration of value 11.8 ppb was used to assess the contribution to drinking water.

3. *From non-dietary exposure.* The term ''residential exposure'' is used in this document to refer to non-occupational, non-dietary exposure (e.g., for lawn and garden pest control, indoor pest control, termiticides, and flea and tick control on pets).

Difenoconazole is currently registered for the following uses that could result in residential exposures: Ornamentals/golf course turf. EPA assessed residential exposure using the following assumptions: Adults may be exposed to difenoconazole from its currently registered use on ornamentals. Residential pesticide handlers may be exposed to short-term duration (1–30 days) only. The dermal and inhalation (short-term) residential exposure was assessed for homeowners mixer/loader/applicator wearing short pants and short-sleeved shirts as well as shoes plus socks using garden hose-end sprayer, pump-up compressed air sprayer, and backpack sprayer.

Residential post-application exposure may occur from use of difenoconozole on golf course turf. Short-term dermal exposure was assessed for post-application exposure to golf course turf. Further information regarding EPA standard assumptions and generic inputs for residential exposures may be found at *http://www.epa.gov/pesticides/trac/science/trac6a05.pdf.*

4. *Cumulative effects from substances with a common mechanism of toxicity.* Section 408(b)(2)(D)(v) of FFDCA requires that, when considering whether to establish, modify, or revoke a tolerance, the Agency consider ''available information'' concerning the cumulative effects of a particular pesticide's residues and ''other substances that have a common mechanism of toxicity.''

Difenoconazole is a member of the triazole-containing class of pesticides. Although conazoles act similarly in plants (fungi) by inhibiting ergosterol biosynthesis, there is not necessarily a relationship between their pesticidal activity and their mechanism of toxicity in mammals. Structural similarities do not constitute a common mechanism of toxicity. Evidence is needed to establish that the chemicals operate by the same, or essentially the same, sequence of major biochemical events (EPA, 2002). In conazoles, however, a variable pattern of toxicological responses is found. Some events are hepatotoxic and hepatocarcinogenic in mice. Some induce thyroid tumors in rats. Some induce developmental, reproductive, and neurological effects in rodents. Furthermore, the conazoles produce a diverse range of biochemical events including altered cholesterol levels, stress responses, and altered DNA methylation. It is not clearly understood whether these biochemical events are directly connected to their toxicological outcomes. Thus, there is currently no evidence to indicate that conazoles share common mechanisms of toxicity and EPA is not following a cumulative risk approach based on a common mechanism of toxicity for the conazoles. For information regarding EPA's procedures for cumulating effects from substances found to have a common mechanism of toxicity, see EPA's Web sites at: *http://www.epa.gov/pesticides/cumulative* and *http://www.epa.gov/fedrgstr/EPA_PEST/2002/January/Day_16/.*

Difenoconazole is a triazole-derived pesticide. This class of compounds can form the common metabolite 1,2,4-triazole and two triazole conjugates (triazolylalanine and triazolylacetic acid). To support existing tolerances and to establish new tolerances for triazole-derivative pesticides, including difenoconazole, EPA conducted a human health risk assessment for exposure to 1,2,4-triazole, triazolylalanine, and triazolylacetic acid resulting from the use of all current and pending uses of any triazole-derived fungicide. The risk assessment is a highly conservative, screening-level evaluation in terms of hazards associated with common metabolites (e.g., use of a maximum combination of uncertainty factors) and potential dietary and non-dietary exposures (i.e., high end estimates of both dietary and non-dietary exposures). In addition, the Agency retained the additional 10x Food Quality Protection Act (FQPA) safety factor (SF) for the protection of infants and children. The assessment includes evaluations of risks for various subgroups, including those comprised of infants and children. The Agency's risk assessment is found in the propiconazole reregistration docket at *http://www.regulations.gov,* Docket Identification (ID) Number EPA–HQ–OPP–2005–0497. The requested amended uses of difenoconazole resulted in an increase in dietary exposure estimates for free triazole or conjugated triazoles. Therefore, updated dietary exposure analyses were conducted. The most recent update for triazoles may be found in docket ID number EPA–HQ–OPP–2011–0300.

D. Safety Factor for Infants and Children

1. *In general.* Section 408(b)(2)(C) of FFDCA provides that EPA shall apply an additional tenfold (10x) margin of

safety for infants and children in the case of threshold effects to account for prenatal and postnatal toxicity and the completeness of the database on toxicity and exposure unless EPA determines based on reliable data that a different margin of safety will be safe for infants and children. This additional margin of safety is commonly referred to as the FQPA SF. In applying this provision, EPA either retains the default value of 10x, or uses a different additional SF when reliable data available to EPA support the choice of a different factor.

2. *Prenatal and postnatal sensitivity.* EPA determined that the available data indicated no increased susceptibility of rats or rabbits to *in utero* and/or postnatal exposure to difenoconazole. In the prenatal developmental toxicity studies in rats and rabbits and the 2-generation reproduction study in rats, toxicity to the fetuses/offspring, when observed, occurred at equivalent or higher doses than in the maternal/parental animals. In the prenatal developmental toxicity study in rats, maternal toxicity was manifested as decreased body weight gain and food consumption at the LOAEL of 85 mg/kg/day; the NOAEL was 16 mg/kg/day. Developmental toxicity in this study was manifested as alterations in fetal ossifications at 171 mg/kg/day; the developmental NOAEL was 85 mg/kg/day. In a developmental toxicity study in rabbits, maternal and developmental toxicity were seen at the same dose level (75 mg/kg/day). Maternal toxicity in rabbits was manifested as decreased body weight gain and decreased food consumption, while developmental toxicity was manifested as decreased fetal weight. In a 2-generation reproduction study in rats, there were decreases in maternal body weight gain and decreases in body weights of F_1 males at the LOAEL of 12.5 mg/kg/day; the parental systemic and off spring toxicity NOAEL was 1.25 mg/kg/day.

3. *Conclusion.* EPA has determined that reliable data show the safety of infants and children would be adequately protected if the FQPA SF were reduced to 1x. That decision is based on the following findings:

i. The toxicity database is complete except for results of a recently submitted immunotoxicity study required as a part of new data requirements in the 40 CFR part 158 for conventional pesticide registration. However, the existing toxicology database for difenoconazole does not show any evidence of treatment-related effects on the immune system. The overall weight of evidence suggests that this chemical does not directly target the immune system. Accordingly, the Agency does not believe that findings from the ongoing review of the immunotoxicity study will result in a lower POD than that currently in use for overall risk assessment, and therefore, a database uncertainty factor is not needed to account for lack of this study.

ii. The acute and subchronic neurotoxicity studies in rats are available. These data show that difenoconazole exhibits some evidence of neurotoxicity, but the effects are transient or occur at the limit dose. EPA concluded that difenoconazole is not a neurotoxic compound. Based on the toxicity profile, and lack of neurotoxicity, a developmental neurotoxicity study in rats is not required.

iii. There is no evidence that difenoconazole results in increased susceptibility of rats or rabbit fetuses to *in utero* and/or postnatal exposure in the developmental and reproductive toxicity data.

iv. There are no residual uncertainties identified in the exposure databases. A conservative dietary food exposure assessment was conducted. Acute dietary food exposure assessments were performed based on tolerance-level residues, 100 PCT, and the available empirical or (DEEM™ version 7.81) default processing factors.

Chronic dietary exposure assessments were based on tolerance-level residues for some commodities, average field trial residues for the majority of commodities, the available empirical or (DEEM™ version 7.81) default processing factors, and 100 PCT. These are conservative approaches and are unlikely to understate the residues in food commodities.

EPA also made conservative (protective) assumptions in the ground water and surface water modeling used to assess exposure to difenoconazole in drinking water. Post-application residential exposure of children is not expected. These assessments will not underestimate the exposure and risks posed by difenoconazole.

E. Aggregate Risks and Determination of Safety

EPA determines whether acute and chronic dietary pesticide exposures are safe by comparing aggregate exposure estimates to the acute PAD (aPAD) and chronic PAD (cPAD). For linear cancer risks, EPA calculates the lifetime probability of acquiring cancer given the estimated aggregate exposure. Short-, intermediate-, and chronic-term risks are evaluated by comparing the estimated aggregate food, water, and residential exposure to the appropriate PODs to ensure that an adequate MOE exists.

1. *Acute risk.* Using the exposure assumptions discussed in this unit for acute exposure, the acute dietary exposure from food and water to difenoconazole will occupy 27% of the aPAD for children 1 to 2 years old, the population group receiving the greatest exposure.

2. *Chronic risk.* Using the exposure assumptions described in this unit for chronic exposure, EPA has concluded that chronic exposure to difenoconazole from food and water will utilize 75% of the cPAD for children 1 to 2 years old, the population group receiving the greatest exposure. Based on the explanation in Unit III.C.3., regarding residential use patterns, chronic residential exposure to residues of difenoconazole is not expected.

3. *Short-term risk.* Short-term aggregate exposure takes into account short-term residential exposure plus chronic exposure to food and water (considered to be a background exposure level).

Difenoconazole is currently registered for uses that could result in short-term residential exposure, and the Agency has determined that it is appropriate to aggregate chronic exposure through food and water with short-term residential exposures to difenoconazole.

Using the exposure assumptions described in this unit for short-term exposures, EPA has concluded the combined short-term food, water, and residential exposures result in aggregate MOEs of 200 or greater. Because EPA's level of concern for difenoconazole is a MOE of 100 or below, these MOEs are not of concern.

4. *Intermediate-term risk.* Intermediate-term aggregate exposure takes into account intermediate-term residential exposure plus chronic exposure to food and water (considered to be a background exposure level).

An intermediate-term adverse effect was identified; however, difenoconazole is not registered for any use patterns that would result in intermediate-term residential exposure. Intermediate-term risk is assessed based on intermediate-term residential exposure plus chronic dietary exposure. Because there is no intermediate-term residential exposure and chronic dietary exposure has already been assessed under the appropriately protective cPAD (which is at least as protective as the POD used to assess intermediate-term risk), no further assessment of intermediate-term risk is necessary, and EPA relies on the chronic dietary risk assessment for evaluating intermediate-term risk for difenoconazole.

5. *Aggregate cancer risk for U.S. population.* As discussed in Unit III.A., the chronic dietary risk assessment is protective of any potential cancer effects.

6. *Determination of safety.* Based on these risk assessments, EPA concludes that there is a reasonable certainty that no harm will result to the general population, or to infants and children from aggregate exposure to difenoconazole residues.

IV. Other Considerations

A. Analytical Enforcement Methodology

Adequate enforcement methodology, gas chromatography with nitrogen/phosphorus detection (GC/NPD) method AG–575B, is available to enforce the tolerance expression for residues of difenoconazole in/on plant commodities. An adequate enforcement method, liquid chromatography coupled with tandem mass spectrometry (LC/MS/MS) method REM 147.07b, is available for the determination of residues of difenoconazole and CGA–205375 in livestock commodities. Adequate confirmatory methods are also available.

The methods may be requested from: Chief, Analytical Chemistry Branch, Environmental Science Center, 701 Mapes Rd., Ft. Meade, MD 20755–5350; telephone number: (410) 305–2905; email address: *residuemethods@epa.gov.*

B. International Residue Limits

In making its tolerance decisions, EPA seeks to harmonize U.S. tolerances with international standards whenever possible, consistent with U.S. food safety standards and agricultural practices. EPA considers the international maximum residue limits (MRLs) established by the Codex Alimentarius Commission (Codex), as required by FFDCA section 408(b)(4). The Codex Alimentarius is a joint United Nations Food and Agriculture Organization/World Health Organization food standards program, and it is recognized as an international food safety standards-setting organization in trade agreements to which the United States is a party. EPA may establish a tolerance that is different from a Codex MRL; however, FFDCA section 408(b)(4) requires that EPA explain the reasons for departing from the Codex level.

Codex maximum residue levels (MRLs) for residues of difenoconazole *per se* have been established at 0.5 ppm for tomato; 0.5 ppm for pome fruits; and 0.02 ppm for potato. Based on the available magnitude of the residue data, harmonization with these established Codex MRLs is not possible because, the Codex MRLs are too low to adequately cover residues resulting from the proposed use rates in the United States. Canadian MRLs for residues of difenoconazole have been established at 0.6 ppm for a number of fruiting vegetables and 1.0 ppm for a number of pome fruit, and are in agreement with proposed U.S. tolerances. The data for vegetable, tuberous and corm, subgroup 1C at 4.0 ppm was a joint review between EPA and the Health Canada Pest Management Regulatory Agency (PMRA). The two agencies are in agreement regarding tolerance level for subgroup 1C.

C. Revisions to Petitioned-For Tolerances

The Petitioner proposed removal of the established tolerance in or on potato, processed waste at 0.04 ppm. However, the Agency has determined that this tolerance needs to be retained and raised to 7.3 ppm. Further, the commodity definition should be changed to potato, wet peel. The potato processing data indicate that residues of difenoconazole do not concentrate in flakes and chips but do concentrate in wet peel. Based on the highest-average-field-trial value for residues in/on potatoes (2.34 ppm) and the average processing factor (3.1×), expected residues could be as high as 7.3 ppm in potato, wet peel. Because this value is higher than the recommended 4.0 ppm tolerance for vegetable, tuberous and corm, subgroup 1C, a separate tolerance is needed in potato, wet peel at 7.3 ppm.

The Petitioner's proposed commodity terminology for berry, low growing, subgroup 13–07G, except cranberry was corrected to comply with current crop terminology policy.

V. Conclusion

Therefore, tolerances are established for residues of difenoconazole, 1-[2-[2-chloro-4-(4-chlorophenoxy)phenyl]-4-methyl-1,3-dioxolan-2-ylmethyl]-1*H*-1,2,4,-triazole, including its metabolites and degradates, in or on Berry, low growing, subgroup 13–07G, except cranberry at 2.5 ppm, Fruit, citrus, group 10–10 at 0.60 ppm, Fruit, pome, group 11–10 at 1.0 ppm, and Vegetable, fruiting, group 8–10 at 0.60 ppm; and by revising the established tolerance in or on Vegetable, tuberous and corm, subgroup 1C at 0.01 ppm by increasing the residue level to 4.0 ppm. The difenoconazole tolerances are further amended by correcting the commodity terminology for Potato, processed waste to read Potato, wet peel and increasing the tolerance level from 0.04 ppm to 7.3 ppm. In addition, this regulation removes established tolerances in or on Vegetables, fruiting, group 8, Fruit, citrus, group 10, Fruit, pome, group 11 and Strawberry, as these commodities are included in new crop groups or subgroups for which tolerances are established by this action.

VI. Statutory and Executive Order Reviews

This final rule establishes tolerances under FFDCA section 408(d) in response to a petition submitted to the Agency. The Office of Management and Budget (OMB) has exempted these types of actions from review under Executive Order 12866, entitled ''Regulatory Planning and Review'' (58 FR 51735, October 4, 1993). Because this final rule has been exempted from review under Executive Order 12866, this final rule is not subject to Executive Order 13211, entitled ''Actions Concerning Regulations That Significantly Affect Energy Supply, Distribution, or Use'' (66 FR 28355, May 22, 2001) or Executive Order 13045, entitled ''Protection of Children from Environmental Health Risks and Safety Risks'' (62 FR 19885, April 23, 1997). This final rule does not contain any information collections subject to OMB approval under the Paperwork Reduction Act (PRA), 44 U.S.C. 3501 *et seq.,* nor does it require any special considerations under Executive Order 12898, entitled ''Federal Actions to Address Environmental Justice in Minority Populations and Low-Income Populations'' (59 FR 7629, February 16, 1994).

Since tolerances and exemptions that are established on the basis of a petition under FFDCA section 408(d), such as the tolerance in this final rule, do not require the issuance of a proposed rule, the requirements of the Regulatory Flexibility Act (RFA) (5 U.S.C. 601 *et seq.*) do not apply.

This final rule directly regulates growers, food processors, food handlers, and food retailers, not States or tribes, nor does this action alter the relationships or distribution of power and responsibilities established by Congress in the preemption provisions of FFDCA section 408(n)(4). As such, the Agency has determined that this action will not have a substantial direct effect on States or tribal governments, on the relationship between the national government and the States or tribal governments, or on the distribution of power and responsibilities among the various levels of government or between the Federal Government and Indian tribes. Thus, the Agency has determined that Executive Order 13132, entitled

''Federalism'' (64 FR 43255, August 10, 1999) and Executive Order 13175, entitled ''Consultation and Coordination with Indian Tribal Governments'' (65 FR 67249, November 9, 2000) do not apply to this final rule. In addition, this final rule does not impose any enforceable duty or contain any unfunded mandate as described under Title II of the Unfunded Mandates Reform Act of 1995 (UMRA) (Pub. L. 104–4).

This action does not involve any technical standards that would require Agency consideration of voluntary consensus standards pursuant to section 12(d) of the National Technology Transfer and Advancement Act of 1995 (NTTAA), Public Law 104–113, section 12(d) (15 U.S.C. 272 note).

VII. Congressional Review Act

The Congressional Review Act, 5 U.S.C. 801 *et seq.,* generally provides that before a rule may take effect, the agency promulgating the rule must submit a rule report to each House of the Congress and to the Comptroller General of the United States. EPA will submit a report containing this rule and other required information to the U.S. Senate, the U.S. House of Representatives, and the Comptroller General of the United States prior to publication of this final rule in the **Federal Register**. This final rule is not a ''major rule'' as defined by 5 U.S.C. 804(2).

List of Subjects in 40 CFR Part 180

Environmental protection, Administrative practice and procedure, Agricultural commodities, Pesticides and pests, Reporting and recordkeeping requirements.

Dated: July 11, 2012.

Lois Rossi,

Director, Registration Division, Office of Pesticide Programs.

Therefore, 40 CFR chapter I is amended as follows:

PART 180—[AMENDED]

■ 1. The authority citation for part 180 continues to read as follows:

Authority: 21 U.S.C. 321(q), 346a and 371.

■ 2. Section 180.475, the table to paragraph (a)(1) is amended as follows:

■ i. Remove the entries for ''Fruit, citrus, group 10,'' ''Fruit, pome, group 11,'' ''Potato, processed waste,'' ''Strawberry,'' and ''Vegetables, fruiting, group 8.''

■ ii. Add alphabetically new entries for Berry, low growing, subgroup 13–07G, except cranberry; Fruit, citrus, group 10–10; Fruit, pome, group 11–10; Potato, wet peel; and Vegetable, fruiting, group 8–10, as shown below.

■ iii. Revise the entry in the table to paragraph (a)(1) for ''Vegetable, tuberous and corm, subgroup 1C''.

The added and revised text read as follows:

§ 180.475 Difenconazole, tolerances for residues.

(a) * * *

(1) * * *

Commodity	Parts per million
* * * * *	
Berry, low growing, subgroup 13–07G, except cranberry	2.5
* * * * *	
Fruit, citrus, group 10–10	0.60
Fruit, pome, group 11–10	1.0
* * * * *	
Potato, wet peel	7.3
* * * * *	
Vegetable, fruiting, group 8–10	0.60
Vegetable, tuberous and corm, subgroup 1C	4.0

* * * * *

[FR Doc. 2012–17628 Filed 7–18–12; 8:45 am]

BILLING CODE 6560–50–P

DEPARTMENT OF COMMERCE

National Oceanic and Atmospheric Administration

50 CFR Part 679

[Docket No. 111207737–2141–02]

RIN 0648–XC113

Fisheries of the Exclusive Economic Zone Off Alaska; Pacific Ocean Perch in the West Yakutat District of the Gulf of Alaska

AGENCY: National Marine Fisheries Service (NMFS), National Oceanic and Atmospheric Administration (NOAA), Commerce.

ACTION: Temporary rule; closure.

SUMMARY: NMFS is prohibiting directed fishing for Pacific ocean perch in the West Yakutat District of the Gulf of Alaska (GOA). This action is necessary to prevent exceeding the 2012 total allowable catch (TAC) of Pacific ocean perch in the West Yakutat District of the GOA.

DATES: Effective 1200 hrs, Alaska local time (A.l.t.), July 16, 2012, through 2400 hrs, A.l.t., December 31, 2012.

FOR FURTHER INFORMATION CONTACT: Steve Whitney, 907–586–7269.

SUPPLEMENTARY INFORMATION: NMFS manages the groundfish fishery in the GOA exclusive economic zone according to the Fishery Management Plan for Groundfish of the Gulf of Alaska (FMP) prepared by the North Pacific Fishery Management Council under authority of the Magnuson-Stevens Fishery Conservation and Management Act. Regulations governing fishing by U.S. vessels in accordance with the FMP appear at subpart H of 50 CFR part 600 and 50 CFR part 679.

The 2012 TAC of Pacific ocean perch in the West Yakutat District of the GOA is 1,692 metric tons (mt) as established by the final 2012 and 2013 harvest specifications for groundfish of the (77 FR 15194, March 14, 2012).

In accordance with § 679.20(d)(1)(i), the Administrator, Alaska Region, NMFS (Regional Administrator), has determined that the 2012 TAC of Pacific ocean perch in the West Yakutat District of the GOA will soon be reached. Therefore, the Regional Administrator is establishing a directed fishing allowance of 1,592 mt, and is setting aside the remaining 100 mt as bycatch to support other anticipated groundfish fisheries. In accordance with § 679.20(d)(1)(iii), the Regional Administrator finds that this directed fishing allowance has been reached. Consequently, NMFS is prohibiting directed fishing for Pacific ocean perch in the West Yakutat District of the GOA.

After the effective date of this closure the maximum retainable amounts a § 679.20(e) and (f) apply at any time during a trip.

Classification

This action responds to the best available information recently obtained from the fishery. The Acting Assistant Administrator for Fisheries, NOAA (AA), finds good cause to waive the requirement to provide prior notice and opportunity for public comment pursuant to the authority set forth at 5 U.S.C. 553(b)(B) as such requirement is impracticable and contrary to the public interest. This requirement is impracticable and contrary to the public interest as it would prevent NMFS from responding to the most recent fisheries data in a timely fashion and would delay the closure of directed fishing for Pacific ocean perch in the West Yakutat District of the GOA. NMFS was unable to publish a notice providing time for public comment because the most

recent, relevant data only became available as of July 13, 2012.

The AA also finds good cause to waive the 30-day delay in the effective date of this action under 5 U.S.C. 553(d)(3). This finding is based upon the reasons provided above for waiver of prior notice and opportunity for public comment.

This action is required by § 679.20 and is exempt from review under Executive Order 12866.

Authority: 16 U.S.C. 1801 *et seq.*

Dated: July 16, 2012.

Emily H. Menashes,

Deputy Director, Office of Sustainable Fisheries, National Marine Fisheries Service.

[FR Doc. 2012–17601 Filed 7–16–12; 4:15 pm]

BILLING CODE 3510–22–P

Proposed Rules

Federal Register
Vol. 77, No. 139
Thursday, July 19, 2012

This section of the FEDERAL REGISTER contains notices to the public of the proposed issuance of rules and regulations. The purpose of these notices is to give interested persons an opportunity to participate in the rule making prior to the adoption of the final rules.

SMALL BUSINESS ADMINISTRATION

13 CFR Part 121

RIN 3245–AG25

Small Business Size Standards: Utilities

AGENCY: U.S. Small Business Administration.

ACTION: Proposed rule.

SUMMARY: The U.S. Small Business Administration (SBA) proposes to revise the small business size standards for nine industries in North American Industry Classification System (NAICS) Sector 22, Utilities. Six of those industries deal with electric power generation, distribution and transmission (NAICS 221111, NAICS 221112, NAICS 221113, NAICS 221119, NAICS 221121, and NAICS 221122) and have a common size standard based on electric output. For those six industries, SBA proposes to replace the current size standard of 4 million megawatt hours in electric output with an employee based size standard of 500 employees. SBA also proposes to increase the small business size standards for three industries in NAICS Sector 22 that have receipt based size standards, namely—NAICS 221310, Water Supply and Irrigation Systems, from $7 million to $25.5 million; NAICS 221320, Sewage Treatment Facilities, from $7 million to $19 million; and NAICS 221330, Steam and Air-conditioning Supply, from $12.5 million to $14 million. As part of its ongoing initiative to review all size standards, SBA evaluated all industries in NAICS Sector 22 that have either electric output based or receipts based size standards to determine whether the existing size standards should be retained or revised. This rule is one of a series of proposed rules that will examine industries grouped by NAICS sector. SBA has issued a White Paper entitled ''Size Standards Methodology'' and published in the October 21, 2009 issue of the **Federal Register** a notice that ''Size Standards Methodology'' is available on its Web site at *www.sba.gov/size* for public review and comments. The ''Size Standards Methodology'' White Paper explains how SBA establishes, reviews and modifies its small business size standards. In this proposed rule, SBA has applied its methodology that pertains to establishing, reviewing, and modifying a size standard based on average annual receipts and electric output.

DATES: SBA must receive comments to this proposed rule on or before September 17, 2012.

ADDRESSES: Identify your comments by RIN 3245–AG25 and submit them by one of the following methods: (1) *Federal eRulemaking Portal: www.regulations.gov* follow the instructions for submitting comments; or (2) *Mail/Hand Delivery/Courier:* Khem R. Sharma, Ph.D., Chief, Size Standards Division, 409 Third Street SW., Mail Code 6530, Washington, DC 20416. SBA will not accept comments submitted by email.

SBA will post all comments to this proposed rule on *www.regulations.gov*. If you wish to submit confidential business information (CBI) as defined in the User Notice at *www.regulations.gov*, you must submit such information to U.S. Small Business Administration, Khem R. Sharma, Ph.D., Chief, Size Standards Division, 409 Third Street SW., Mail Code 6530, Washington, DC 20416, or send an email to *sizestandards@sba.gov.* Highlight the information that you consider to be CBI and explain why you believe SBA should hold this information as confidential. SBA will review your information and determine whether it will make the information public.

FOR FURTHER INFORMATION CONTACT: Khem R. Sharma, Ph.D., Chief, Size Standards Division, (202) 205–6618 or *sizestandards@sba.gov*.

SUPPLEMENTARY INFORMATION: To determine eligibility for Federal small business assistance, SBA establishes small business size definitions (referred to as size standards) for private sector industries in the United States. SBA uses two primary measures of business size: average annual receipts and average number of employees. SBA uses financial assets, electric output, and refining capacity to measure the size for a few specialized industries. In addition, SBA's Small Business Investment Company (SBIC), Certified Development Company (504) and 7(a) Loan Programs use either the industry based size standards or net worth and net income based size standards to determine eligibility for those programs. At the beginning of SBA's comprehensive size standards review, there were 41 different size standards, covering 1,141 NAICS industries and 18 sub-industry activities (''exceptions'' in SBA's table of size standards). Thirty-one of these size levels were based on average annual receipts, seven were based on average number of employees, and three were based on other measures.

Over the years, SBA has received comments that its size standards have not kept up with changes in the economy, in particular the changes in the Federal contracting marketplace and industry structure. The last time SBA conducted a comprehensive review of size standards was during the late 1970s and early 1980s. Since then, most reviews of size standards have been limited to a few specific industries in response to requests from the public and Federal agencies. SBA also makes periodic inflation adjustments to its monetary based size standards. SBA's latest inflation adjustment to size standards was published in the **Federal Register** on July 18, 2008 (73 FR 41237).

Because of changes in the Federal marketplace and industry structure since the last overall size standards review, SBA recognizes that current data may no longer support some of its existing size standards. Accordingly, in 2007, SBA began a comprehensive review of all size standards to determine if they are consistent with current data, and to adjust them when necessary. In addition, on September 27, 2010, the President of the United States signed the Small Business Jobs Act of 2010 (Jobs Act). The Jobs Act directs SBA to conduct a detailed review of all size standards and to make appropriate adjustments to reflect market conditions. Specifically, the Jobs Act requires SBA to conduct a detailed review of at least one-third of all size standards during every 18-month period from the date of its enactment. In addition, the Jobs Act requires that SBA conduct a review of all size standards not less frequently than once every 5 years thereafter. Reviewing existing small business size standards and

making appropriate adjustments based on current data are also consistent with Executive Order 13563 on improving regulation and regulatory review.

Rather than review all size standards at one time, SBA is reviewing a group of industries within an NAICS Sector. An NAICS Sector generally consists of 25 to 75 industries, except for the manufacturing sector, which has considerably more industries. Once SBA completes its review of size standards for industries in an NAICS Sector, it will issue a proposed rule to revise size standards for those industries for which currently available data and other relevant factors support doing so.

Below is a discussion of SBA's size standards methodology for establishing receipts based size standards, which SBA applied to this proposed rule, including analyses of industry structure, Federal procurement trends and other factors for industries reviewed in this proposed rule, the impact of the proposed revisions to size standards on Federal small business assistance, and the evaluation of whether a revised size standard would exclude dominant firms from being considered small.

Size Standards Methodology

SBA has recently developed a ''Size Standards Methodology'' for developing, reviewing and modifying size standards when necessary. SBA has published this document on its Web site at *www.sba.gov/size* for public review and comments and included it, as a supporting document, in the electronic docket for this proposed rule at *www.regulations.gov*. SBA does not apply every feature of its ''Size Standards Methodology'' to all industries because not all features are appropriate. For example, since this proposed rule covers all industries with receipts based size standards in NAICS Sector 22, the methodology described here applies to establishing receipts based standards. However, the methodology is made available in its entirety for parties who are interested in SBA's overall approach to establishing, evaluating and modifying small business size standards. SBA always explains its analysis in individual proposed and final rules relating to size standard revisions for specific industries.

SBA welcomes comments from the public on a number of issues concerning its ''Size Standards Methodology,'' such as suggestions on alternative approaches to establishing and modifying size standards; whether there are alternative or additional factors that SBA should consider; whether SBA's approach to small business size standards makes sense in the current economic environment; whether SBA's use of anchor size standards is appropriate in the current economy; whether there are gaps in SBA's methodology because of the lack of comprehensive data; and whether there are other facts or issues that SBA should consider. Comments on SBA's methodology should be submitted via: (1) The Federal eRulemaking Portal: *www.regulations.gov*; the docket number is SBA–2009–0008; follow the instructions for submitting comments; or (2) Mail/Hand Delivery/Courier: Khem R. Sharma, Ph.D., Chief, Size Standards Division, 409 Third Street SW., Mail Code 6530, Washington, DC 20416. As with comments received to this and other proposed rules, SBA will post all comments on its methodology on *www.regulations.gov*. As of July 19, 2012, SBA has received 14 comments to its ''Size Standards Methodology.'' The comments are available to the public at *www.regulations.gov*. SBA continues to welcome comments on its methodology from interested parties.

Congress granted discretion to the SBA's Administrator to establish detailed small business size standards. 15 U.S.C. 632(a)(2). Section 3(a)(3) of the Small Business Act (15 U.S.C. 632(a)(3)) requires that ''* * * the [SBA] Administrator shall ensure that the size standard varies from industry to industry to the extent necessary to reflect the differing characteristics of the various industries and consider other factors deemed to be relevant by the Administrator.'' Accordingly, the economic structure of an industry serves as the underlying basis for developing and modifying small business size standards. SBA identifies the small business segment of an industry by examining data on the economic characteristics defining the industry structure itself (as described below). In addition to analysis of industry structure, SBA also considers current economic conditions, together with its own mission, program objectives, and the Administration's current policies, suggestions from industry groups and Federal agencies, and public comments on the proposed rule, when it establishes small business size standards. SBA also examines whether a size standard based on industry and other relevant data successfully excludes businesses that are dominant in the industry. This proposed rule affords the public an opportunity to review and comment on SBA's proposals to revise size standards in NAICS Sector 22, as well as on the data and methodology it uses to evaluate and revise a size standard.

Industry Analysis

For the current comprehensive size standards review, SBA has established three ''base'' or ''anchor'' size standards: $7 million in average annual receipts for industries that have receipts based size standards, 500 employees for manufacturing and other industries that have employee based size standards (except for Wholesale Trade), and 100 employees for industries in the Wholesale Trade Sector. SBA established 500 employees as the anchor size standard for manufacturing industries at its inception in 1953. Shortly thereafter, SBA established $1 million in average annual receipts as the anchor size standard for nonmanufacturing industries. SBA has periodically increased the receipts based anchor size standard for inflation, and it stands today at $7 million. Since 1986, SBA has set 100 employees as the size standard for all industries in the Wholesale Trade Sector for SBA financial assistance programs. However, NAICS codes for Wholesale Trade Industries (NAICS Sector 42) and their 100 employee size standard do not apply to Federal procurement programs. Rather, for Federal procurement purposes, the size standard is 500 employees for all industries in Wholesale Trade and for all industries in Retail Trade (NAICS Sector 44–45) under SBA's nonmanufacturer rule (13 CFR 121.406(b)).

These long-standing anchor size standards have stood the test of time and gained legitimacy through practice and general public acceptance. An anchor size standard is neither a minimum nor a maximum. It is a common size standard for a large number of industries that have similar economic characteristics and serves as a reference point in evaluating size standards for individual industries. SBA uses the anchor in lieu of trying to establish precise small business size standards for each industry. Otherwise, theoretically, the number of size standards might be as high as the number of industries for which SBA establishes size standards (1,141). Furthermore, the data SBA analyzes are static, while the U.S. economy is not. Hence, absolute precision is impossible. Therefore, SBA presumes an anchor size standard is appropriate for a particular industry unless that industry displays economic characteristics that are considerably different from others with the same anchor size standard.

When evaluating a size standard, SBA compares the economic characteristics

of the specific industry under review to the average characteristics of industries with one of the three anchor size standards (referred to as ''anchor comparison group''). This allows SBA to assess the industry structure and to determine whether the industry is appreciably different from the other industries in the anchor comparison group. If the characteristics of a specific industry under review are similar to the average characteristics of the anchor comparison group, the anchor size standard is considered appropriate for that industry. SBA may consider adopting a size standard below the anchor when: (1) All or most of the industry characteristics are significantly smaller than the average characteristics of the anchor comparison group; or (2) other industry considerations strongly suggest that the anchor size standard would be an unreasonably high size standard for the industry.

If the specific industry's characteristics are significantly higher than those of the anchor comparison group, then a size standard higher than the anchor size standard may be appropriate. The larger the differences are between the characteristics of the industry under review and those in the anchor comparison group, the larger will be the difference between the appropriate industry size standard and the anchor size standard. To determine a size standard above the anchor size standard, SBA analyzes the characteristics of a second comparison group. For industries with receipts based size standards, including those in NAICS Sector 22 that are reviewed in this proposed rule, SBA has developed a second comparison group consisting of industries with the highest levels of receipts based size standards. To determine the level of a size standard above the anchor size standard, SBA analyzes the characteristics of this second comparison group. The size standards for this group of industries range from $23 million to $35.5 million in average annual receipts, with the weighted average size standard for the group being $29 million. SBA refers to this comparison group as the ''higher level receipts based size standard group.''

The primary factors that SBA evaluates when analyzing the structural characteristics of an industry include average firm size, startup costs and entry barriers, industry competition, and distribution of firms by size. SBA also evaluates, as an additional primary factor, the impact that revising size standards might have on Federal contracting assistance to small businesses. These are, generally, the five most important factors SBA examines when establishing or revising a size standard for an industry. In addition, SBA considers and evaluates other information that it believes is relevant to a particular industry (such as technological changes, growth trends, SBA financial assistance and other program factors, *etc.*). SBA also considers possible impacts of size standard revisions on eligibility for Federal small business assistance, current economic conditions, the Administration's policies, and suggestions from industry groups and Federal agencies. Public comments on a proposed rule also provide important additional information. SBA thoroughly reviews all public comments before making a final decision on its proposed size standards. Below are brief descriptions of each of the five primary factors that SBA has evaluated for each industry in NAICS Sector 22 being reviewed in this proposed rule. A more detailed description of this analysis is provided in SBA ''Size Standards Methodology,'' available at *http://www.sba.gov/size*.

1. *Average firm size.* SBA computes two measures of average firm size: Simple average and weighted average. For industries with receipts based size standards, the simple average is the total receipts of the industry divided by the total number of firms in the industry. The weighted average firm size is the sum of weighted simple averages in different receipts size classes, where weights are the shares of total industry receipts for respective size classes. The simple average weighs all firms within an industry equally, regardless of their size. The weighted average overcomes that limitation by giving more weight to larger firms.

If the average firm size of an industry under review is significantly higher than the average firm size of industries in the anchor comparison industry group, this will generally support a size standard higher than the anchor size standard. Conversely, if the industry's average firm size is similar to or significantly lower than that of the anchor comparison industry group, it will be a basis to adopt the anchor size standard, or in rare cases, a standard lower than the anchor.

2. *Startup costs and entry barriers.* Startup costs reflect a firm's initial size in an industry. New entrants to an industry must have sufficient capital and other assets to start and maintain a viable business. If new firms entering a particular industry have greater capital requirements than firms in industries in the anchor comparison group, this can be a basis for establishing a size standard higher than the anchor size standard. In lieu of data on actual startup costs, SBA uses average assets as a proxy to measure the capital requirements for new entrants to an industry.

To calculate average assets, SBA begins with the total sales to total assets ratio for an industry from the Risk Management Association's Annual eStatement Studies. SBA then applies these ratios to the average receipts of firms in that industry. An industry with a significantly higher level of average assets than that of the anchor comparison group is likely to have higher startup costs; this in turn will support a size standard higher than the anchor. Conversely, an industry with average assets that are similar to or significantly lower than those of the anchor comparison group is likely to have lower startup costs; this in turn will support adoption of the anchor size standard, or in rare cases, one lower than the anchor.

3. *Industry competition.* Industry competition is generally measured by the share of total industry receipts generated by the largest firms in an industry. SBA generally evaluates the share of industry receipts generated by the four largest firms in each industry. This is referred to as the ''four-firm concentration ratio,'' a commonly used economic measure of market competition. SBA compares the four-firm concentration ratio for an industry under review to the average four-firm concentration ratio for industries in the anchor comparison group. If a significant share of economic activity within the industry is concentrated among a few relatively large companies, all else being equal, SBA will establish a size standard higher than the anchor size standard. SBA does not consider the four-firm concentration ratio as an important factor in assessing a size standard if its value for an industry under review is less than 40 percent. For industries in which the four-firm concentration ratio is 40 percent or more, SBA examines the average size of the four largest firms in determining a size standard.

4. *Distribution of firms by size.* SBA examines the shares of industry total receipts accounted for by firms of different receipts and employment size classes in an industry. This is an additional factor that SBA evaluates in assessing competition within an industry. If most of an industry's economic activity is attributable to smaller firms, this indicates that small businesses are competitive in that industry. This supports adopting the anchor size standard. If most of an

industry's economic activity is attributable to larger firms, this indicates that small businesses are not competitive in that industry. This will support adopting a size standard above the anchor.

Concentration is a measure of inequality of distribution. To determine the degree of inequality of distribution in an industry, SBA computes the Gini coefficient by constructing the Lorenz curve. The Lorenz curve presents the cumulative percentages of units (firms) along the horizontal axis and the cumulative percentages of receipts (or other measures of size) along the vertical axis. (For further detail, please refer to SBA's ''Size Standards Methodology'' on SBA's Web site at *www.sba.gov/size*.) Gini coefficient values vary from zero to one. If receipts are distributed equally among all the firms in an industry, the value of the Gini coefficient will equal zero. If an industry's total receipts are attributed to a single firm, the Gini coefficient will equal one.

SBA compares the Gini coefficient value for an industry under review with that for industries in the anchor comparison group. If an industry shows a higher Gini coefficient value than industries in the anchor comparison industry group this may, all else being equal, warrant a higher size standard than the anchor. Conversely, if an industry's Gini coefficient is similar to or lower than that for the anchor group, the anchor standard, or in some cases a standard lower than the anchor, may be adopted.

5. *Impact on Federal contracting and SBA loan programs.* SBA examines the impact a size standard change may have on Federal small business assistance. This most often focuses on the share of Federal contracting dollars awarded to small businesses in the industry in question. In general, if the small business share of Federal contracting in an industry with significant Federal contracting is appreciably less than the small business share of the industry's total receipts, there is justification for considering a size standard higher than the existing size standard. The disparity between the small business Federal market share and the industry-wide small business share may have a variety of causes, such as extensive administrative and compliance requirements associated with Federal contracts, different skill sets required for Federal contracts as compared to typical commercial contracting work, and the size of Federal contracts. These, and other factors, are likely to influence the type of firms that compete for Federal contracts. By comparing the Federal contracting small business share with the industry-wide small business share, SBA includes in its size standards analysis the latest Federal contracting trends. This analysis may indicate a size standard larger than the current standard.

SBA considers Federal procurement trends in the size standards analysis only if: (1) The small business share of Federal contracting dollars is at least 10 percent lower than the small business share of total industry receipts, and (2) the amount of total Federal contracting averages $100 million or more during the latest three fiscal years. These thresholds reflect a significant level of contracting where a revision to a size standard may have an impact on contracting opportunities to small businesses.

Besides the impact on small business Federal contracting, SBA also evaluates the impact of a proposed size standard on SBA's loan programs. For this, SBA examines the volume and number of SBA guaranteed loans within an industry and the size of firms obtaining those loans. This allows SBA to assess whether the existing or the proposed size standard for a particular industry may restrict the level of financial assistance to small firms. If the analysis shows that the current size standards have impeded financial assistance to small businesses within an industry, this can support higher size standards. However, if small businesses within an industry under current size standards have been receiving significant amounts of financial assistance through SBA's loan programs, or businesses receiving the financial assistance are much smaller than the existing size standards, this factor may not be considered for determining the size standards.

Sources of Industry and Program Data

SBA's primary source of industry data used in this proposed rule is a special tabulation of the data from 2007 Economic Census (see *www.census.gov/econ/census07/*) prepared by the U.S. Bureau of the Census (Census Bureau) for SBA. The special tabulation provides SBA with data on the number of firms, number of establishments, number of employees, annual payroll, and annual receipts of companies by NAICS Sector (2-digit level), Subsector (3-digit level), Industry Group (4-digit level), Industry (6-digit level). These data are arrayed by various classes of firms' size based on the overall number of employees and receipts of the entire enterprise (all establishments and affiliated firms) from all industries. The special tabulation enables SBA to evaluate average firm size, the four-firm concentration ratio and distribution of firms by receipts and employment size.

In some cases, where industry data were not available due to disclosure prohibitions in the Census Bureau's tabulation, SBA either estimated missing values using available relevant data or examined data at a higher level of industry aggregation, such as at the NAICS 2-digit (Sector), 3-digit (Subsector), or 4-digit (Industry Group) level. In some instances, SBA had to base its analysis only on those factors for which data were available or estimates of missing values were possible.

For industries that provide electric power generation, distribution and transmission (NAICS codes 221111–221122), SBA received data from the U.S. Energy Information Agency (EIA) (*www.eia.gov/cneaf/electricity*) and an industry association. The Census Bureau's Economic Census does not provide data on electric output. The EIA data include annual electric output in megawatt hours and total annual revenues from electricity sales by class of ownership of individual entities involved in the generation, transmission, or distribution of electricity in the U.S. SBA analyzed EIA electric output data for investor-owned utilities and power marketers for 1974–2009 to evaluate industry structure of these industries. The industry association data also included the EIA data and additional information on affiliation among firms in the electric power generation, transmission, and distribution industries.

To calculate average assets, SBA used sales to total assets ratios from the Risk Management Association's Annual eStatement Studies, 2008–2010.

To evaluate Federal contracting trends, SBA examined data representing Federal contract awards for fiscal years 2008–2010. The data are available from the U.S. General Service Administration's Federal Procurement Data System—Next Generation (FPDS–NG).

To assess the impact on financial assistance to small businesses SBA examined data on its own guaranteed loan programs for fiscal years 2008–2010.

Dominance in Field of Operation

Section 3(a) of the Small Business Act (15 U.S.C. 632(a)) defines a small business concern as one that is: (1) Independently owned and operated; (2) not dominant in its field of operation; and (3) within a specific small business size definition or size standard established by the SBA Administrator. SBA considers as part of its evaluation

whether a business concern at a proposed size standard would be dominant in its field of operation. For this, SBA generally examines the industry's market share of firms at the proposed size standard. Market share and other factors may indicate whether a firm can exercise a major controlling influence on a national basis in an industry where a significant number of business concerns are engaged. If a contemplated size standard would include a dominant firm, SBA will consider a lower size standard to exclude the dominant firm from being defined as small.

Selection of Size Standards

To simplify size standards, for the ongoing comprehensive review of receipts based size standards, SBA has proposed to select size standards from a limited number of levels. For many years, SBA has been concerned about the complexity of determining small business status caused by a large number of varying receipts based size standards (*see* 69 FR 13130 (March 4, 2004) and 57 FR 62515 (December 31, 1992)). At the beginning of the current comprehensive size standards review, there were 31 different levels of receipts based size standards. They ranged from $0.75 million to $35.5 million, and many of them applied to only one or a few industries. SBA believes that size standards with such a large number of small variations among them are both unnecessary and difficult to justify analytically. To simplify managing and using size standards, SBA proposes that there be fewer size standard levels. This will produce more common size standards for businesses operating in related industries. This will also result in greater consistency among the size standards for industries that have similar economic characteristics.

SBA proposes, therefore, to apply one of eight receipts based size standards to each of the three industries in NAICS Sector 22 with a receipts-based size standard. The eight ''fixed'' receipts based size standard levels are $5 million, $7 million, $10 million, $14 million, $19 million, $25.5 million, $30 million, and $35.5 million. To establish these eight receipts based size standard levels, SBA considered the current minimum, the current maximum, and the most commonly used current receipts based size standards. At the start of the current comprehensive size standards review, the most commonly used receipts based size standards clustered around the following: $2.5 million to $4.5 million, $7 million, $9 million to $10 million, $12.5 million to $14 million, $25 million to $25.5 million, and $33.5 million to $35.5 million. SBA selected $7 million as one of eight fixed levels of receipts based size standards because it is an anchor standard for receipts based standards. The lowest or minimum receipts based size level will be $5 million. Other than the standards for agriculture and those based on commissions (such as real estate brokers and travel agents), $5 million will include those industries that at the start of the comprehensive size standards review had the lowest receipts based standards, which ranged from $2 million to $4.5 million. Among the higher level size clusters, SBA has set four fixed levels, namely: $10 million, $14 million, $25.5 million, and $35.5 million. Because there are large intervals between some of the fixed levels, SBA also established two intermediate levels, namely $19 million between $14 million and $25.5 million, and $30 million between $25.5 million and $35.5 million. These two intermediate levels reflect roughly the same proportional differences as between the other two successive levels.

Evaluation of Industry Structure

Of 10 industries in NAICS Sector 22, Utilities, SBA has evaluated the structure of six industries engaged in generation, distribution and transmission of electricity that have size standards based on electric output of 4 million megawatt hours and three industries that have size standards based on average annual receipts to assess the appropriateness of the current size standards. In this proposed rule, SBA has not reviewed one industry that has an employee based size standard in NAICS Sector 22 (NAICS 221210, Natural Gas Distribution). That employee based size standard will remain in effect until SBA reviews all employee based size standards at a later date.

As explained previously, if the characteristics of an industry under review are similar to the average characteristics of industries in the anchor comparison group, the anchor size standard is generally considered appropriate for that industry. If an industry's structure is significantly different from industries in the anchor group, a size standard lower or higher than the anchor size standard might be selected. The level of the new size standard is based on the difference between the characteristics of the anchor comparison group and a second industry comparison group. As described above, the second comparison group for receipts based standards consists of industries with the highest receipts based size standards, ranging from $23 million to $35.5 million. The average size standard for this group is $29 million. SBA refers to this group of industries as the ''higher level receipts based size standard comparison group.'' SBA determines differences in industry structure between an industry under review and the industries in the two comparison groups by comparing data on each of the industry factors, including average firm size, average assets size, the four-firm concentration ratio, and the Gini coefficient of distribution of firms by size. Table 1, Average Characteristics of Receipts Based Comparison Groups, below, shows two measures of the average firm size (simple and weighted), average assets size, the four-firm concentration ratio, average receipts of the four largest firms, and the Gini coefficient for both anchor level and higher level comparison groups for receipts based size standards.

TABLE 1—AVERAGE CHARACTERISTICS OF RECEIPTS BASED COMPARISON GROUPS

Receipts based comparison group	Avg. firm size ($ million)		Avg. assets size ($ million)	Four-firm concentration ratio (%)*	Avg. receipts of four largest firms ($ million)*	Gini coefficient
	Simple average	Weighted average				
Anchor Level	1.32	19.63	0.84	16.6	196.4	0.693
Higher Level	5.07	116.84	3.20	32.1	1,376.0	0.830

* To be used for industries with a four-firm concentration ratio of 40% or greater.

Derivation of Receipts Based Size Standards Based on Industry Factors

For each industry factor in Table 1, Average Characteristics of Receipts Based Comparison Groups, above, SBA derives a separate size standard based on the differences between the values for an industry under review and the values for the two comparison groups. If the industry value for a particular factor is near the corresponding factor for the anchor comparison group, SBA will consider the $7 million anchor size standard appropriate for that factor.

An industry factor with a value significantly above or below the anchor comparison group will generally warrant a size standard for that industry above or below the $7 million anchor. The level of the new size standard in these cases is based on the proportional difference between the industry value and the values for the two comparison groups.

For example, if an industry's simple average receipts are $3.3 million, that would support a $19 million size standard. The $3.3 million level is 52.8 percent between the average firm size of $1.32 million for the anchor comparison group and $5.07 million for the higher level comparison group (($3.30 million − $1.32 million) ÷ ($5.07 million − $1.32 million) = 0.528 or 52.8%). This proportional difference is applied to the difference between the $7 million anchor size standard and average size standard of $29 million for the higher level size standard group and then added to $7 million to estimate a size standard of $18.62 million ([{$29.0 million − $7.0 million} * 0.528] + $7.0 million = $18.62 million). The final step is to round the estimated $18.62 million size standard to the nearest fixed size standard, which in this example is $19 million.

SBA applies the above calculation to derive a size standard for each industry factor. Detailed formulas involved in these calculations are presented in SBA's ''Size Standards Methodology,'' which is available on its Web site at *www.sba.gov/size*. (However, it should be noted that the figures in the ''Size Standards Methodology'' White Paper are based on 2002 Economic Census data and are different from those presented in this proposed rule. That is because when SBA prepared its ''Size Standards Methodology,'' the 2007 Economic Census data were not yet available). Table 2, Values of Industry Factors and Supported Size Standards, below, shows ranges of values for each industry factor and the levels of size standards supported by those values.

TABLE 2—VALUES OF INDUSTRY FACTORS AND SUPPORTED SIZE STANDARDS

If simple avg. receipts size is ($ million)	*Or if* weighted avg. receipts size is ($ million)	*Or if* avg. assets size is ($ million)	*Or if* avg. receipts of largest four firms is ($ million)	*Or if* Gini coefficient is	*Then* size standard is ($ million)
<1.15	<15.22	<0.73	<142.8	<0.686	5.0
1.15 to 1.57	15.22 to 26.26	0.73 to 1.00	142.8 to 276.9	0.686 to 0.702	7.0
1.58 to 2.17	26.27 to 41.73	1.01 to 1.37	277.0 to 464.5	0.703 to 0.724	10.0
2.18 to 2.94	41.74 to 61.61	1.38 to 1.86	464.6 to 705.8	0.725 to 0.752	14.0
2.95 to 3.92	61.62 to 87.02	1.87 to 2.48	705.9 to 1,014.1	0.753 to 0.788	19.0
3.93 to 4.86	87.03 to 111.32	2.49 to 3.07	1,014.2 to 1,309.0	0.789 to 0.822	25.5
4.87 to 5.71	111.33 to 133.41	3.08 to 3.61	1,309.1 to 1,577.1	0.823 to 0.853	30.0
>5.71	>133.41	>3.61	>1,577.1	>0.853	35.5

Derivation of Receipts Based Size Standards Based on Federal Contracting Factor

Besides industry structure, SBA also evaluates Federal contracting data to assess how successful small business are in getting Federal contracts under the existing size standards. For the current comprehensive size standards review, SBA has decided to designate a size standard at one level higher than the current size standard for industries where the small business share of total Federal contracting dollars is between 10 and 30 percentage points lower than their shares in total industry receipts and at two levels higher than the current size standard if the difference is more than 30 percentage points.

SBA has chosen not to designate a size standard for the Federal contracting factor alone that is higher than two levels above the current size standard. The FPDS–NG data have a number of limitations and there are also complex relationships among a number of variables affecting small business participation in the Federal marketplace. SBA believes, therefore, that a larger adjustment to size standards based on Federal contracting activity should be based on a more detailed analysis of the impact of any subsequent revision to the current size standard. In limited situations, however, SBA may conduct a more extensive examination of Federal contracting experience. This may enable SBA to support a different size standard than indicated by this general rule and take into consideration significant and unique aspects of small business competitiveness in the Federal contract market. SBA welcomes comment on its methodology of incorporating the Federal contracting factor in the size standard analysis and suggestions for alternative methods and other relevant information on small business experience in the Federal contract market.

Among the three industries that have receipts based size standards in NAICS Sector 22, two (NAICS codes 221310 and 221320) received an average of $100 million or more annually in Federal contracts during fiscal years 2008–2010. Of these two industries, the Federal contracting factor was significant (*i.e.,* the difference between the small business share of total industry receipts and small business share of Federal contracting dollars was 10 percentage points or more) for only NAICS 221310.

New Receipts Based Size Standards Based on Industry and Federal Contracting Factors

Table 3, New Receipts Based Size Standards Supported by Each Factor for Each Industry (millions of dollars), below, shows the results of analyses of industry and Federal contracting factors for each of the three industries with receipts based standards in NAICS Sector 22. Each NAICS Industry in columns 2, 3, 4, 6, 7 and 8 shows two numbers. The upper number is the value for the industry or federal contracting factor shown on the top of the column; the lower number is the size standard supported by that factor. For the four-firm concentration ratio, a size standard is estimated based on the average receipts of the top four firms if its value is 40 percent or more. If the four-firm concentration ratio for an industry (column 5) is less than 40 percent, no size standard is estimated

for that factor. Column 9 shows the new size standard for each industry, calculated as the average of size standards supported by each factor and rounded to the nearest fixed size level. Analytical details involved in the averaging procedure are described in the SBA ''Size Standard Methodology'' White Paper which is available on its Web site at *www.sba.gov/size.* For comparison, the current size standards are also shown in column 10 of Table 3, New Receipts Based Size Standards Supported by Each Factor for Each Industry (millions of dollars), below.

TABLE 3—NEW RECEIPTS BASED SIZE STANDARDS SUPPORTED BY EACH FACTOR FOR EACH INDUSTRY

[Millions of dollars]

(1) NAICS	(2) Simple average firm size ($ million)	(3) Weighted average firm size ($ million)	(4) Average assets size ($ million)	(5) Four-firm ratio (%)	(6) Four-firm average size ($ million)	(7) Gini coefficient	(8) Federal contract factor (%)	(9) New size standard ($ million)	(10) Current size standard ($ million)
221310, Water supply and irrigation systems	$2.2	$110.7	$7.5	46.5	$886.6	0.854	−15.0%	.....	.....
	14.0	25.5	$35.5	.....	19.0	$35.5	$10.0	$25.5	$7.0
221320, Sewage treatment facilities	3.5	37.0	.....	55.8	182.7	0.834	9.8%	.....	.....
	19.0	10.0	.....	.....	7.0	$30.0	.....	19.0	7.0
221330, Steam and air-conditioning supply	27.3	50.6	.....	61.4	155.2	0.501	.....	.....	.....
	35.5	14.0	.....	.....	7.0	$5.0	.....	14.0	12.5

Evaluation of Electric Utilities Industries (NAICS Codes 221111 to 221122)

NAICS Industry Group 2211, Electric Power Generation, transmission, and distribution, consists of six industries that currently have a common size standard of 4 million megawatt hours (MWh) from the sale and total electric output for the preceding fiscal year. These industries are: NAICS 221111, Hydroelectric Power Generation; NAICS 221112, Fossil Fuel Electric Power Generation; NAICS 221113, Nuclear Electric Power Generation; NAICS 221119, Other Electric Power Generation; NAICS 221121, Electric Bulk Power Transmission and Control; and NAICS 221122, Electric Power Distribution. To qualify as small under this size standard, a firm, including its affiliates, must be primarily engaged in the generation, transmission and/or distribution of electric energy for sale and its total electric output for preceding fiscal year does not exceed 4 million megawatt hours (*see* Footnote 1 in 13 CFR 121.201). SBA included this requirement with the 4 million MWh size standard to prevent large non-electric firms and/or their electric services subsidiaries from qualifying as small.

In this proposed rule, SBA has considered three possible changes to the current size standard for the six industries under NAICS Industry Group 2211: (1) Increasing the current MWh based size standard from 4 million MWh to 8 million MWh, and modifying Footnote 1; (2) adding an employee based size standard of 500 employees along with the 8 million MWh size standard and eliminating Footnote 1; and (3) replacing the current 4 million MWh size standard with an employee based size standard of 500 employees and eliminating Footnote 1.

SBA is concerned that the ''primarily engaged'' requirement to qualify as small under the MWh based size standard may restrict Federal contracting opportunities for small businesses that are developing capabilities in electric energy production and are still engaged in activities in other industries. To qualify as small under receipts based and employee based size standards for other industries, SBA's size regulations do not include the ''primary industry'' requirement to compete as an eligible small business on Federal procurement. In addition, the current footnote could be interpreted incorrectly that the concern and each of its affiliates must be primarily engaged in electric generation, transmission, or generation. That was never the intent of the footnote. Rather the footnote was meant to look at primary industry of the concern and its affiliates as a whole. The ''primarily engaged'' requirement would no longer be necessary by combining an employee based size standard with the MWh based size standard or by replacing it with an employee based size standard.

SBA established the 4 million MWh size standard for electric services in 1974 (39 FR 22163, June 20, 1974 and 39 FR 30345, August 22, 1974). Prior to that, a generic receipts based size standard of $1 million was applied to electric services and other services industries for which SBA had not established an industry specific size standard. SBA provided only the general reasons for adopting the 4 million MWh size standard in the 1974 proposed and final rules. SBA's analysis of industry data available at that time from the Federal Power Administration had found that the largest 20 percent of firms dominated the industry in terms of total electric output, sales, assets, *etc.* SBA also observed a trend of increased concentration in the industry. At the 4 million MWh size standard, as the proposed and final rules noted, a small business would account for not more than 0.3 percent of total industry output.

The electric power industry has undergone significant structural changes since the 1970s. As with other regulated industries, the electric power industry underwent deregulation leading to unbundling of generation, transmission, and distribution activities. Retail competition also has been introduced in 15 states in place of local monopolies in the electric power market. Merger and acquisition activities in recent years, especially by holding companies, have further contributed to the growing concentration in the electric power industry. New firms producing electric power using alternative energy sources (solar, wind, *etc.*) have entered the industry and these firms tend to be generally smaller than firms producing electricity using conventional energy sources such as fossil fuel. Electric power marketers selling electricity in wholesale and retail markets have also emerged as the result of deregulation. Thus, the electric power industry today comprises different firms that generate, transmit, and/or distribute electric services as compared to one company integrating all of these activities in the past. Although the electric power industry has undergone significant changes, many large electric power producers still continue to generate, transmit, and/or distribute electric

power either themselves or through various subsidiaries. The current industry's structure reflecting the deregulated environment may have implications on the appropriateness of the current size standard for electric utilities.

The uniqueness of the electric power industry presents several challenges in analyzing the size standard for NAICS Industry Group 2211. Due to the highly capital intensive nature of generating and transmitting electricity, a few very large firms account for most of the generation and transmission of electric power. However, a large number of small firms also generate and distribute a small amount of electric power. As a result of the concentration of most of the activity in the few largest firms and the small number of firms operating in most of the specific industries for electric generation, transmission, and distribution industries, data from the Census Bureau's special tabulation contain a significant amount of suppressed data, limiting our ability to use them for size standards analysis using SBA's size standards methodology. More importantly, the Census Bureau's Economic Census does not collect data on electric output and no comparison groups exist to assess differing characteristics of individual industries based on electric output, thereby rendering most of the SBA's size standards methodology not applicable to analyze MWh based size standards for electric utilities.

Consequently, SBA has examined the changes in electric power industry structure since 1974 using data on privately owned for-profit electric generators to assess whether the current size standard should be modified to more appropriately reflect today's electric power industry composition. As mentioned earlier, these data were obtained from the EIA's Web site and were adjusted for affiliation using the information provided by an industry association. Data on electric power generators are the appropriate data available that are most comparable with the data SBA evaluated in 1974. Because of the lack of comparable historical data on electric transmission and distribution, the new size standard that SBA has considered proposing for electric generators will also apply to the transmission, and distribution industries. Although deregulation has resulted in unbundling of generation, transmission, and distribution activities, many of the firms engaged in the electric power generation are still engaged in transmission or/and distribution activities. Thus, SBA believes that a common size standard is still more appropriate for all the electric generation, transmission, and distribution industries than having a separate size standard for each of these activities, whether it is based on MWh, number of employees, or combination of both.

Based on the historical analysis of industry factors, one of the three alternatives SBA considered is to increase the current 4 million MWh size standard for NAICS Industry Group 2211, to 8 million MWh. SBA bases this proposed increase on several considerations. First, the data show that the industry has become much more concentrated today than it was in the early 1970s. Data on electric power generators from the U.S. Department of Energy's Energy Information Agency (EIA) and an analysis provided to SBA by an industry association showed that the share of the largest 20 percent of firms in the industry output increased from 73 percent in 1974 to 97 percent in 2009. Similarly, the Gini coefficient index characterizing the distribution of firms by electric output size increased from 0.698 to 0.909 during that period. These two trends indicate a significant increase in industry concentration and strongly support an increase to the existing size standard. Second, despite the increased industry concentration, average firm size decreased by almost 16 percent from 7.6 million MWh in 1974 to 6.4 million MWh in 2009. As mentioned above, many new, very small firms have entered the electric power generation industry. This decline in average firm size indicates that the current size standard may not need to be increased. Third, to attain the 1974 market share of a small electric utility company of 0.3 percent and the 1974 cumulative market share of small electric utilities of 6.7 percent of the industry output in 2009 would support an increase to the current size standard in the range of 6 million MWh to 9 million MWh.

SBA examined Federal contracting trends for electric power generation, transmission, and distribution during fiscal years 2008–2010. Federal contracting for NAICS Industry Group 2211 averaged $1.7 billion per year during this period. Of these total Federal contract dollars, small businesses obtained approximately 6 percent, which was very similar to the small business share of total industry receipts. Because the small business share in the Federal market was similar to the small business share of total industry receipts, the Federal contracting was not a significant factor. However, small business shares of both total contract dollars and total industry receipts for electric services industries were appreciably lower than those for other industries, warranting an increase to the current size standard.

SBA considered proposing an 8 million MWh size standard, as it would maintain the small business coverage ratio at the 4 million MWh size standard in 1974. This would also make the small business coverage ratio for electric services industries more comparable with the small business ratios for most other industries that have size standards in terms of the number of employees or average annual receipts. The small business coverage ratios (*i.e.,* the percentage of total firms in an industry classified as small) for electric services industries under the current 4 million MWh size standard are appreciably lower than those for other industries. SBA, however, is concerned that a size standard that is more than two times the current size standard would include extremely large firms with billions of dollars in revenues, as well as firms that may not need Federal assistance designed for small businesses. Smaller firms within the electric power industry today tend to be much more specialized in providing alternative sources of energy on a much smaller scale than traditional electric power generators. Wholesale and retail power marketers that sell power generated by very large electric power generators also tend to be relatively small. A size standard more than two times the current size standard may put these small electric power generators and small power marketers in competitive disadvantage, and it may result in mischaracterizing the small business segment of the electric power industry.

If SBA were to adopt the solely MWh based measure of 8 million MWh size standard for NAICS Industry Group 2211 considered above, it believes that Footnote 1 needs to be revised to make it clearer how SBA determines whether a firm is primarily engaged in electric generation, transmission, or distribution. As discussed previously, a reader of the current footnote might incorrectly interpret that the concern and each of its affiliates must be primarily engaged in electric generation, transmission or generation. To correct this, SBA would consider revising Footnote 1 by substituting the term ''primarily engaged'' with ''primary industry'' and applying 13 CFR 121.107 when determining the primary industry of the firm. With these changes, the revised Footnote 1 would read as follows:

1. *NAICS codes 221111, 221112, 221113, 221119, 221121,* and *221122*—A firm, combined with its affiliates, is

small if its primary industry is the generation, transmission, and/or distribution of electric energy for sale, and its total electric output for the preceding fiscal year did not exceed 8 million megawatt hours. In determining small business eligibility, the megawatt hours of the firm and each affiliate are combined and the determination of primary industry is based on the provisions of 13 CFR 121.107.

Comments supporting the first alternative in which SBA considered to increase the size standard to 8 million MWh should also address whether the suggested changes to the existing footnote will sufficiently clarify and improve upon the application of a primary industry requirement.

As an alternative to increasing the current MWh based size standard, SBA considered adding an employee based size standard along with the proposed 8 million MWh size standard and removing Footnote 1 on the ''primarily engaged'' requirement. As discussed above, SBA is concerned that the current requirement for a firm to be primarily engaged in generation, transmission, or distribution of electric power to qualify for Federal small business assistance may have adversely affected small businesses interested in Federal contracting opportunities. Since deregulation, Federal agencies have been seeking out small businesses involved in the electric power generation using alternative energy sources and/or in electric power distribution for procurement of electric power. SBA has received several size protests involving the application of the requirement that businesses be primarily engaged in generation, transmission, or distribution of electric power to qualify for Federal small business assistance. The purpose of the ''primarily engaged'' requirement was to prevent a large business not involved in the electric power generation, transmission, or distribution industries from qualifying itself or its electric power affiliate(s) as small. Based on review of those cases, SBA believes that requirement under today industry's structure may be too restrictive and, therefore, unintentionally limiting Federal contracting opportunities for small businesses involved in electric generation and distribution. By combining an employee based size standard with the MWh based size standard, affiliations with other businesses will be fully captured through number of employees, thereby rendering the ''primarily engaged'' requirement unnecessary.

Accordingly, SBA has considered adding a 500 employee size standard along with the 8 million MWh size standard and removing Footnote 1. The 500 employee size standard is based on a comparison of the small business coverage ratios under the proposed 8 million MWh size standard and the same small business coverage ratio in terms of number of employees. An electric power generator with 250 to 500 employees has a market share of approximately 0.3 percent and the cumulative market share of approximately 9 percent of the industry electric output. Although SBA could have also considered proposing a 250 employee size standard, it believes that a 500 employee size standard is more appropriate for two reasons. First, a 500 employee size standard is more consistent with SBA's ''Size Standards Methodology'' that considers 500 employees as a starting point (*i.e.,* 500 employees is the employee based anchor size standard) for considering an employee based size standard for an industry. Second, since the industry coverage ratios under the 250 employees size standard would be considerably lower than typically observed in most other industries with receipts based or employee based size standards, selecting the higher 500 employee size standard may better capture the small business segment within the electric utilities industry.

Adding number of employees as a component of the size standard would not be unique to industries in NAICS Industry Group 2211. The small business size standard for NAICS 324110, Petroleum Refineries, has had two components to its size standard for at least 20 years. Currently a petroleum refiner is small for Federal government procurement if it has no more than 1,500 employees and refining capacity of 125,000 barrels per calendar day.

As the second alternative to increasing the current size standard to 8 million MWh, SBA also considered proposing to replace the current MWh based size standard with a 500 employee size standard. An employee based size standard has several advantages over the MWh based size standard. First, as stated earlier, the ''primarily engaged'' requirement (Footnote 1) would no longer be necessary under the employee based size standard as it will capture the total size of firms that are involved in both electric services industries and nonelectric industries. Second, this would eliminate the difficulty in ascertaining the ''primarily engaged'' requirement in size status protests involving companies that are engaged in both electric services and other industries. Third, without the ''primarily engaged'' requirement under an employee based size standard, new entrants to electric power industry (especially small firms that generate electric power using alternative sources and still have significant involvement in other industries) can qualify for small business contracting opportunities. Fourth, the number of employees is a more appropriate measure to determine small business size status. Under the MWh based measure, to qualify as small for electric services only the electric output generated, transmitted, or distributed is counted. All other activities of the firm are not counted in determining its size. Consequently, a firm involved in multiple industries may be significantly larger than another firm at the same electric output level that is exclusively involved in electric services. This is inconsistent with how SBA defines size standards for other industries in which the size of a firm includes the employees or receipts from all industries. Fifth, the number of employees would also be consistent with the size measure SBA uses for all manufacturers, and several other industries. SBA also uses an employee based size standard to establish eligibility to provide manufactured products for Federal government as small distributors. Electric generation, while not classified as manufacturing under the NAICS, involves processes that are akin to manufacturing in creating electric power. The process transforms some form of raw materials (such as fossil fuel, wind, solar, hydro, *etc.*) to electric power through the application of significant levels of capital equipment and infrastructure. Furthermore, as discussed in SBA's ''Size Standards Methodology,'' an industry that is capital intensive is generally viewed by SBA as supporting an employee based size standard. Sixth, this would enable SBA to analyze size standards for electric services industries more consistently by using its ''Size Standards Methodology'' that it applies to all receipts and employee based size standards. Seventh, an employee based size standard would also help simplify size standards.

Among the three options considered, SBA strongly favors, for the reasons discussed above, adopting the second alternative to the MWh based size standard that would replace the current 4 million MWh size standard and the ''primarily engaged'' requirement in Footnote 1 with an employee based size standard of 500 employees. SBA is specifically interested in comments addressing adverse consequences, if any, of using a 500 employee size

standard instead of a MWh based size standard. The comments should explain how an employee based size standard could impact small businesses and why the number of employees would be a less preferable size standard measure to a MWh based measure. Barring any adverse consequences, SBA would strongly consider eliminating the MWh based size standard and adopting just an employee size standard instead. However, the Agency is reluctant to eliminate the MWh based size standard without first providing the public with an opportunity to comment on this change, along with an assessment of whether an updated 8 million MWh size standard or combining it with a 500 employee size standard would be more appropriate instead.

To simplify size standards, SBA has established or proposed common size standards for closely related industries in other NAICS Sectors. Within NAICS Sector 22, SBA is proposing a 500 employees common size standard for all industries in NAICS Industry Group 2211 for consistency with the current common size standard and for simplification of size standards by having fewer differing size standard levels. In addition, as mentioned earlier, Census suppresses much of the industry level data due to the limited number of electric generation, transmission, and distribution firms. The data reflect that activity is concentrated among a few large firms. This makes analyzing industry specific size standards extremely difficult. In addition, many businesses engaged in electric services also operate in one or two of the other industries. Consequently, industry specific size standards may result in businesses typically engaged in other closely related industries subject to differing size standards.

Evaluation of Dominance in Field of Operation

SBA has determined that no firm in NAICS Sector 22, Utilities, for which it has proposed to increase or modify size standards, will be large enough at the proposed size standard to dominate its field of operation. At the proposed size standards, if adopted, small business shares of total industry receipts among those industries vary from 0.3 percent to 1.5 percent. These levels of market share effectively preclude a firm at the proposed size standards from exerting control on its industry.

Proposed Changes to Size Standards

Based on the analyses discussed above, SBA proposes to increase receipts based size standards for three industries and change measure of size from the megawatt hours to the number of employees in six industries in Sector 22. The proposed changes are summarized in Table 4, Summary of Proposed Size Standards Revisions, below.

TABLE 4—SUMMARY OF PROPOSED SIZE STANDARDS REVISIONS

NAICS Code	NAICS industry title	Current size standard	Proposed size standard
221111	Hydroelectric Power Generation	4 million megawatt hours	500 employees.
221112	Fossil Fuel Electric Power Generation	4 million megawatt hours	500 employees.
221113	Nuclear Electric Power Generation	4 million megawatt hours	500 employees.
221119	Other Electric Power Generation	4 million megawatt hours	500 employees.
221121	Electric Bulk Power Transmission and Control	4 million megawatt hours	500 employees.
221122	Electric Power Distribution	4 million megawatt hours	500 employees.
221310	Water Supply and Irrigation Systems	$7.0 million	$25.5 million.
221320	Sewage Treatment Facilities	$7.0 million	$19.0 million.
221330	Steam and Air-Conditioning Supply	$12.5 million	$14.0 million.

Request for Comments

SBA invites public comments on this proposed rule, especially on the following issues.

1. To simplify size standards, SBA proposes eight fixed levels for receipts based size standards: $5 million, $7 million, $10 million, $14 million, $19 million, $25.5 million, $30 million, and $35.5 million. SBA invites comments on whether simplification of size standards in this way is necessary and if these proposed fixed size levels are appropriate. SBA welcomes suggestions on alternative approaches to simplifying small business size standards.

2. SBA seeks feedback on whether the proposed levels of size standards are appropriate given the economic characteristics of each industry. SBA also seeks feedback and suggestions on alternative standards, if they would be more appropriate, including whether the number of employees is a more suitable measure of size for certain industries that currently have either receipts or megawatt hours based size standards and what that employee level should be.

3. SBA's proposed size standards are based on its evaluation of five primary factors: average firm size, average assets size (as a proxy of startup costs and entry barriers), four-firm concentration ratio, distribution of firms by size, and the level and small business share of Federal contracting dollars. SBA welcomes comments on these factors and/or suggestions of other factors that it should consider for assessing industry characteristics when evaluating or revising size standards. SBA also seeks information on other relevant data sources, if available.

4. SBA gives equal weight to each of the five primary factors in all industries. SBA seeks feedback on whether it should continue giving equal weight to each factor or whether it should give more weight to one or more factors for certain industries. Recommendations to weigh some factors more than others should include suggestions on specific weights for each factor for those industries along with supporting information.

5. For some industries, based on its analysis of industry and program data, SBA proposes to increase the existing size standards by a large amount (such as NAICS 221310 and 221320) while for NAICS 221330 the proposed increase is modest. SBA seeks feedback on whether it should, as a policy, limit the increase to a size standard and/or whether it should, as a policy, establish minimum or maximum values for its size standards. SBA seeks suggestions on appropriate levels of changes to size standards and on their minimum or maximum levels.

6. SBA has proposed to replace the current 4 million megawatt hours size standard for all six industries in NAICS Industry Group 2211 with a 500 employee size standard and eliminate Footnote 1 requiring that a business concern be primarily engaged in electric generation, transmission, or distribution to qualify as small for Federal small

business assistance. SBA invites comments on whether replacing the current megawatt hours based size standard with an employee based size standard is appropriate or whether it will have any adverse impacts on small businesses. Comments that the employee based size standard would have an adverse impact or that it is not appropriate should explain how it could impact small businesses and why a standard based on MWh is preferable to one based on number of employees.

7. SBA also considered proposing to increase the current MWh based size standard for electric services industries to 8 million MWh as one alternative and to add a 500 employee size standard to the updated 8 million MWh standard as another alternative. Under the latter alternative, SBA also considered proposing to eliminate Footnote 1. SBA seeks comments on whether a combination of megawatt hours and the number of employees is a more appropriate size standard than either the number of employees only or megawatt hours only.

8. If SBA were to adopt only the MWh based size standard of 8 million MWh for NAICS Industry Group 2211, it considered revising Footnote 1 to read as follows: ''NAICS codes 221111, 221112, 221113, 221119, 221121, and 221122—A firm, combined with its affiliates, is small if its primary industry is the generation, transmission, and/or distribution of electric energy for sale, and its total electric output for the preceding fiscal year did not exceed 8 million megawatt hours. In determining small business eligibility, the megawatt hours of the firm and each affiliate are combined and the determination of primary industry is based on the provisions of 13 CFR 121.107.'' SBA seeks comments on whether the revision to the existing footnote is necessary and if so whether the revised footnote will sufficiently clarify and improve upon the application of a primary industry requirement.

9. SBA has proposed a 500 employee based common size standard for all industries within NAICS Industry Group 2211 (electric generation, transmission, and distribution). SBA seeks comments on whether it should continue using a common size standard or adopt separate size standard for electric generation, transmission, and distribution. If commenters believe that separate size standards would be more appropriate, they should explain why and recommend appropriate size standards for specific industries.

10. For analytical simplicity and efficiency, in this proposed rule, SBA has refined its size standard methodology to obtain a single value as a proposed size standard instead of a range of values as it used in its past size regulations. SBA welcomes any comments on this procedure and suggestions on alternative methods.

Public comments on the above issues are very valuable to SBA for validating its size standard methodology and proposed revisions to size standards in this proposed rule. This will help SBA to move forward with its review of size standards for other NAICS Sectors. Commenters addressing size standards for a specific industry or a group of industries should include relevant data and/or other information supporting their comments. If comments relate to using size standards for Federal procurement programs, SBA suggests that commenters provide information on the size of contracts, the size of businesses that can undertake the contracts, start-up costs, equipment and other asset requirements, the amount of subcontracting, other direct and indirect costs associated with the contracts, the use of mandatory sources of supply for products and services, and the degree to which contractors can mark up those costs. Compliance With Executive Orders 12866, 13563, 12988 and 13132, the Paperwork Reduction Act (44 U.S.C. Ch. 35) and the Regulatory Flexibility Act (5 U.S.C. 601–612).

Executive Order 12866

The Office of Management and Budget (OMB) has determined that this proposed rule is a ''significant'' regulatory action for purposes of Executive Order 12866. Accordingly, the next section contains SBA's Regulatory Impact Analysis. This is not a ''major rule,'' however, under the Congressional Review Act (5 U.S.C. 800).

Regulatory Impact Analysis

1. Is there a need for the Regulatory Action?

SBA believes that the proposed size standards for a number of industries in NAICS Sector 22, Utilities, will better reflect the economic characteristics of small businesses and the Federal government marketplace in those industries. SBA's mission is to aid and assist small businesses through a variety of financial, procurement, business development and advocacy programs. To assist the intended beneficiaries of these programs, SBA must establish distinct definitions of which businesses are deemed small businesses. The Small Business Act (15 U.S.C. 632(a)) delegates to SBA's Administrator the responsibility for establishing small business definitions. The Act also requires that small business definitions vary to reflect industry differences. The recently enacted Small Business Jobs Act also requires SBA to review all size standards and make necessary adjustments to reflect market conditions. The Supplementary Information section of this proposed rule explains SBA's methodology for analyzing a size standard for a particular industry.

2. What are the Potential Benefits and Costs of this Regulatory Action?

The most significant benefit to businesses obtaining small business status because of this rule is gaining eligibility for Federal small business assistance programs. These include SBA's financial assistance programs, economic injury disaster loans, and Federal procurement programs intended for small businesses. Federal procurement programs provide targeted opportunities for small businesses under SBA's business development programs, such as 8(a), Small Disadvantaged Businesses (SDB), small businesses located in Historically Underutilized Business Zones (HUBZones), women-owned small businesses (WOSB), and service-disabled veteran-owned small business concerns (SDVO SBC). Federal agencies may also use SBA size standards for a variety of other regulatory and program purposes. These programs assist small businesses to become more knowledgeable, stable, and competitive. In nine industries for which SBA has proposed increasing size standards, SBA estimates that about 400 additional firms will obtain small business status and become eligible for these programs. That represents approximately seven percent of the total number of firms that are classified as small under the current standards in all industries within NAICS Sector 22 that are reviewed in this proposed rule. If adopted as proposed, this will increase the small business share of total industry receipts from approximately 21 percent under the current size standards to 27 percent.

Three groups will benefit from these proposed size standards if they are adopted as proposed: (1) Some businesses that are above the current size standards will gain small business status under the revised size standards, thereby enabling them to participate in Federal small business assistance programs; (2) growing small businesses that are close to exceeding the current size standards will be able to retain their small business status under the revised size standards, thereby enabling them to continue their participation in the

programs; and (3) Federal agencies will have a larger pool of small businesses from which to draw for their small business procurement programs.

Under SBA's 7(a) Business and 504 Loan Programs, based on the fiscal years 2008 to 2010 data, SBA estimates that around 10 to 15 additional loans totaling about $2 million to $3 million in Federal loan guarantees could be made to these newly defined small businesses under the proposed size standards. Increasing the size standards will likely result in an increase in small business guaranteed loans to businesses in these industries, but it would be impractical to try to estimate exactly the extent of their number and total amount loaned. Under the Jobs Act, SBA can now guarantee substantially larger loans than in the past. In addition, the Jobs Act established an alternative size standard ($15 million in tangible net worth and $5 million in net income after income taxes) for business concerns that do not meet the size standards for their industry. Therefore, SBA finds it similarly difficult to quantify the impact of these proposed standards on its 7(a) and 504 Loan Programs.

Newly defined small businesses will also benefit from SBA's Economic Injury Disaster Loan (EIDL) Program. However, since the benefit under this program is contingent on the occurrence and severity of a disaster, SBA cannot make a meaningful estimate of benefits for future disasters.

To the extent that those 400 newly defined additional small firms could become active in Federal procurement programs, the proposed changes, if adopted, may entail some additional administrative costs to the Federal Government associated with additional bidders for Federal small business procurement opportunities. In addition, there could be more firms seeking SBA guaranteed loans, more firms eligible for enrollment in the CCR's Dynamic Small Business Search database and more firms seeking certification as 8(a) or HUBZone firms or those qualifying for small business, WOSB, SDVO SBC, and SDB status. Among those newly defined small businesses seeking SBA assistance, there could be some additional costs associated with compliance and verification of small business status and protests of small business status. These added costs will be minimal because mechanisms are already in place to handle these administrative requirements.

Additionally, the costs to the Federal Government may be higher on some Federal contracts. With a greater number of businesses defined as small, Federal agencies may choose to set aside more contracts for competition among small businesses rather than using full and open competition. The movement from unrestricted to small business set-aside contracting might result in competition among fewer total bidders, although there will be more small businesses eligible to submit offers. However, the additional costs associated with fewer bidders, however, are expected to be minor since, as a matter of law, procurements may be set aside for small businesses or reserved for the 8(a), HUBZone, WOSB, or SDVO SBC Programs only if awards are expected to be made at fair and reasonable prices. In addition, higher costs may result if more full and open contracts are awarded to HUBZone businesses that receive price evaluation preferences.

The proposed size standards, if adopted, may have some distributional effects among large and small businesses. Although SBA cannot estimate with certainty the actual outcome of the gains and losses among small and large businesses, it can identify several probable impacts. There may be a transfer of some Federal contracts to small businesses from large businesses. Large businesses may have fewer Federal contract opportunities as Federal agencies decide to set aside more Federal contracts for small businesses. In addition, some Federal contracts may be awarded to HUBZone firms instead of large businesses since these firms may be eligible for a price evaluation preference for contracts when they compete on a full and open basis. Similarly, currently defined small businesses may obtain fewer Federal contracts due to the increased competition from more businesses defined as small. This transfer may be offset by a greater number of Federal procurements set aside for all small businesses. The number of newly defined and expanding small businesses that are willing and able to sell to the Federal Government will limit the potential transfer of contracts away from large and currently defined small businesses. SBA cannot estimate the potential distributional impacts of these transfers with any degree of precision. The proposed revisions to the existing size standards for NAICS Sector 22, Utilities, are consistent with SBA's statutory mandate to assist small business. This regulatory action promotes the Administration's objectives. One of SBA's goals in support of the Administration's objectives is to help individual small businesses succeed through fair and equitable access to capital and credit, Government contracts, and management and technical assistance. Reviewing and modifying size standards, when appropriate, ensures that intended beneficiaries have access to the small business programs designed to assist them.

Executive Order 13563

A description of the need for this regulatory action and benefits and costs associated with this action, including possible distributional impacts that relate to Executive Order 13563, is included above in the Regulatory Impact Analysis under Executive Order 12866.

In an effort to engage interested parties in this action, SBA has presented its size standards methodology (discussed above under Supplementary Information) to various industry associations and trade groups. SBA also met with various industry groups to get their feedback on its methodology and other size standards issues. In addition, SBA presented its size standards methodology to businesses in 13 cities in the U.S. and sought their input as part of the Jobs Act Tours. The presentation included information on the status of the comprehensive size standards review and on how interested parties can provide SBA with input and feedback on size standards review.

Additionally, SBA sent letters to the Directors of the Offices of Small and Disadvantaged Business Utilization (OSDBU) at several Federal agencies with considerable procurement responsibilities requesting their feedback on how the agencies use SBA size standards and whether current standards meet their programmatic needs (both procurement and non-procurement). SBA gave appropriate consideration to all input, suggestions, recommendations, and relevant information obtained from industry groups, individual businesses, and Federal agencies in preparing this proposed rule.

The review of size standards in NAICS Sector 22, Utilities, is consistent with Executive Order 13563, Section 6, calling for retrospective analyses of existing rules. As discussed previously, SBA's last comprehensive review of size standards was during the late 1970s and early 1980s. Since then, except for periodic adjustments of monetary based size standards for inflation, most reviews were limited to a few specific industries in response to requests from the public and Federal agencies. SBA recognizes that changes in industry structure and the Federal marketplace over time have rendered existing size standards for some industries no longer supportable by current data.

Accordingly, in 2007, SBA began a comprehensive review of its size standards to ensure that existing size standards have supportable bases and to revise them when necessary. In addition, on September 27, 2010, the President of the United States signed the Small Business Jobs Act of 2010 (Jobs Act). The Jobs Act directs SBA to conduct a detailed review of all size standards and to make appropriate adjustments to reflect market conditions. Specifically, the Jobs Act requires SBA to conduct a detailed review of at least one-third of all size standards during every 18-month period from the date of its enactment and do a complete review of all size standards not less frequently than once every 5 years thereafter.

Executive Order 12988

This action meets applicable standards set forth in Sections 3(a) and 3(b)(2) of Executive Order 12988, Civil Justice reforms, to minimize litigation, eliminate ambiguity, and reduce burden. The action does not have retroactive or preemptive effect.

Executive Order 13132

For the purposes of Executive Order 13132, SBA has determined that this proposed rule will not have substantial, direct effect on the States, on the relationship between the national government and the States, or on the distribution of power and responsibilities among the various levels of government. Therefore, SBA has determined that this proposed rule has no federalism implications warranting preparation of a federalism assessment.

Paperwork Reduction Act

For the purpose of the Paperwork Reduction Act, 44 U.S.C. Ch. 35, SBA has determined that this rule will not impose new reporting or record keeping requirements.

Initial Regulatory Flexibility Analysis

Under the Regulatory Flexibility Act (RFA), this proposed rule, if adopted, may have a significant impact on a substantial number of small entities in NAICS Sector 22, Utilities. As described above, this rule may affect small entities seeking Federal contracts, loans under SBA's 7(a), 504 and Economic Injury Disaster Loan Programs, and assistance under other Federal small business programs.

Immediately below, SBA sets forth an initial regulatory flexibility analysis (IRFA) of this proposed rule addressing the following questions: (1) What are the need for and objective of the rule?; (2) What are SBA's description and estimate of the number of small entities to which the rule will apply?; (3) What are the projected reporting, record keeping and other compliance requirements of the rule?; (4) What are the relevant Federal rules that may duplicate, overlap or conflict with the rule?; and (5) What alternatives will allow the Agency to accomplish its regulatory objectives while minimizing the impact on small entities?

1. What are the need for and objective of the rule?

Most of the size standards in NAICS Sector 22, Utilities, have not been reviewed since the early 1980s. Technology, productivity growth, international competition, mergers and acquisitions, and updated industry definitions may have changed the structure of many industries in the Sector. Such changes can be sufficient to support a revision to size standards for some industries. Based on its analysis of the latest data available, SBA believes that the proposed size standards in this rule more appropriately reflect the size of businesses in those industries that need Federal assistance. The recently enacted Small Business Jobs Act also requires SBA to review all size standards and make necessary adjustments to reflect market conditions.

2. What is SBA's description and estimate of the number of small entities to which the rule will apply?

If the proposed rule is adopted in its present form, SBA estimates that about 400 additional firms will become small because of proposed revisions to size standards in nine industries. That represents about 7 percent of total firms that are small under current size standards in all industries within NAICS Sector 22 covered by this proposed rule. This will result in an increase in the small business share of total industry receipts for those industries from about 21 percent under the current size standards to about 27 percent under the proposed size standards. The proposed size standards, if adopted, will enable more small businesses to retain their small business status for a longer period. Many have lost their eligibility and find it difficult to compete at such low levels with companies that are significantly larger than they are. SBA believes the competitive impact will be positive for existing small businesses and for those that exceed the current size standards but are on the very low end of those that are not small. They might otherwise be called or referred to as mid-sized businesses, although SBA only defines what is small; other entities are other than small.

3. What are the projected reporting, record keeping and other compliance requirements of the rule?

Proposed size standards changes do not impose any additional reporting or record keeping requirements on small entities. However, qualifying for Federal procurement and a number of other Federal programs requires that entities register in the Central Contractor Registration (CCR) database and certify at least annually that they are small in the Online Representations and Certifications Application (ORCA). Therefore, businesses opting to participate in those programs must comply with CCR and ORCA requirements. There are no costs associated with either CCR registration or ORCA certification. Changing size standards alters eligibility for SBA programs that assist small businesses, but does not impose a regulatory burden as they neither regulate nor control business behavior.

4. What are the relevant Federal rules, which may duplicate, overlap or conflict with the rule?

Under § 3(a)(2)(C) of the Small Business Act, 15 U.S.C. 632(a)(2)(c), Federal agencies must use SBA's size standards to define a small business, unless specifically authorized by statute to do otherwise. In 1995, SBA published in the **Federal Register** a list of statutory and regulatory size standards that identified the application of SBA's size standards as well as other size standards used by Federal agencies (60 FR 57988 (November 24, 1995)). SBA is not aware of any Federal rule that would duplicate or conflict with establishing size standards.

However, the Small Business Act and SBA's regulations allow Federal agencies to develop different size standards if they believe that SBA's size standards are not appropriate for their programs, with the approval of SBA's Administrator (13 CFR 121.903). Additionally, the Regulatory Flexibility Act authorizes an Agency to establish an alternative small business definition after consultation with the Office of Advocacy of the U.S. Small Business Administration (5 U.S.C. 601(3)).

5. What alternatives will allow the Agency to accomplish its regulatory objectives while minimizing the impact on small entities?

By law, SBA is required to develop numerical size standards for establishing eligibility for Federal small

business assistance programs. Other than varying size standards by industry and changing the size measures, no practical alternative exists to the systems of numerical size standards.

List of Subjects in 13 CFR Part 121

Administrative practice and procedure, Government procurement, Government property, Grant programs—business, Individuals with disabilities, Loan programs—business, Reporting and recordkeeping requirements, Small businesses.

For the reasons set forth in the preamble, SBA proposes to amend 13 CFR part 121 as follows:

PART 121—SMALL BUSINESS SIZE REGULATIONS

1. The authority citation for part 121 continues to read as follows:

Authority: 15 U.S.C. 632, 634(b)(6), 662, and 694a(9).

2. In § 121.201, in the table, revise the entries for ''221111'', ''221112'', ''221113'', ''221119'',''221121'', ''221122'', ''221310'', ''221320'', and ''221330'' to read as follows:

§ 121.201 What size standards has SBA identified by North American Industry Classification System codes?

* * * * *

SMALL BUSINESS SIZE STANDARDS BY NAICS INDUSTRY

NAICS codes	NAICS U.S. industry title	Size standards in millions of dollars	Size standards in number of employees
*	* * * *	*	*
221111	Hydroelectric Power Generation		500
221112	Fossil Fuel Electric Power Generation		500
221113	Nuclear Electric Power Generation		500
221119	Other Electric Power Generation		500
221121	Electric Bulk Power Transmission and Control		500
221122	Electric Power Distribution		500
*	* * * *	*	*
221310	Water Supply and Irrigation Systems	$25.5	
221320	Sewage Treatment Facilities	19.0	
221330	Steam and Air-Conditioning Supply	14.0	
*	* * * *	*	*

3. In § 121.201, at the end the table ''Small Business Size Standards by NAICS Industry,'' remove and reserve Footnote 1 to read as follows:

* * * * *

FOOTNOTES

1. [Reserved].

* * * * *

Dated: February 28, 2012.

Karen G. Mills,

Administrator.

[FR Doc. 2012–17441 Filed 7–18–12; 8:45 am]

BILLING CODE 8025–01–P

DEPARTMENT OF TRANSPORTATION

Federal Aviation Administration

14 CFR Part 39

[Docket No. FAA–2012–0755; Directorate Identifier 99–CE–65–AD]

RIN 2120–AA64

Airworthiness Directives; Piaggio Aero Industries S.p.A.

AGENCY: Federal Aviation Administration (FAA), DOT.

ACTION: Notice of proposed rulemaking (NPRM); rescission.

SUMMARY: We propose to rescind Airworthiness Directive (AD) 200–07–11 for all Piaggio Aero Industries S.p.A Model P–180 airplanes. That AD was prompted by mandatory continuing airworthiness information (MCAI) issued by the airworthiness authority for Italy. We issued that AD to prevent the brake hydraulic fluid from leaking because of the brake assembly rods contacting the brake valve tubing, which could result in the inability to adequately stop the airplane during ground operations. Since we issued that AD, we have determined this is no longer an unsafe condition and that regularly scheduled annual inspections address this subject.

DATES: We must receive comments on this proposed AD by September 4, 2012.

ADDRESSES: You may send comments, using the procedures found in 14 CFR 11.43 and 11.45, by any of the following methods:

- *Federal eRulemaking Portal:* Go to *http://www.regulations.gov*. Follow the instructions for submitting comments.
- *Fax:* 202–493–2251.
- *Mail:* U.S. Department of Transportation, Docket Operations, M–30, West Building Ground Floor, Room W12–140, 1200 New Jersey Avenue SE., Washington, DC 20590.
- *Hand Delivery:* Deliver to Mail address above between 9 a.m. and 5 p.m., Monday through Friday, except Federal holidays.

Examining the AD Docket

You may examine the AD docket on the Internet at *http://www.regulations.gov;* or in person at the Docket Operations Office between 9 a.m. and 5 p.m., Monday through Friday, except Federal holidays. The AD docket contains this proposed AD, the regulatory evaluation, any comments received, and other information. The street address for the Docket Office (phone: 800–647–5527) is in the **ADDRESSES** section. Comments will be available in the AD docket shortly after receipt.

FOR FURTHER INFORMATION CONTACT: Mike Kiesov, Aerospace Safety Engineer, FAA, Small Airplane Directorate, 901 Locust, Kansas City, Missouri 64106; telephone: (816) 329–4144; fax: (816) 329–4090; email: *mike.kiesov@faa.gov*.

SUPPLEMENTARY INFORMATION:

Comments Invited

We invite you to send any written relevant data, views, or arguments about this proposal. Send your comments to an address listed under the **ADDRESSES** section. Include ''Docket No. FAA–2012–0755; Directorate Identifier 99–CE–65–AD'' at the beginning of your

comments. We specifically invite comments on the overall regulatory, economic, environmental, and energy aspects of this proposed AD. We will consider all comments received by the closing date and may amend this proposed AD because of those comments.

We will post all comments we receive, without change, to *http://www.regulations.gov,* including any personal information you provide. We will also post a report summarizing each substantive verbal contact we receive about this proposed AD.

Discussion

On March 29, 2000, we issued AD 2000–07–11, Amendment 39–11665 (65 FR 19305, April 11, 2000). That AD required actions intended to address an unsafe condition on the products listed above.

Since we issued AD 2000–07–11 (65 FR 19305, April 11, 2000), we determined the unsafe condition no longer exists. Review of the Piaggio Model P–180 service history and maintenance requirements shows that regularly scheduled annual inspections address this issue. Therefore, the need to continue to address this subject as an unsafe condition through an AD is not necessary.

The European Aviation Safety Agency (EASA), which is the Technical Agent for the Member States of the European Community, has issued 2012–0095–CN, dated May 31, 2012 (referred to after this as ''the MCAI''). The MCAI states:

After a 1999 training session during which conflicting inputs were given to the brake pads between pilot and copilot, a brake system rod was found deflected. The rod, in this bent condition, could possibly wear and damage the tubings connected to the brake valves, with consequent fluid leakage.

Prompted by these findings, PAI issued Service Bulletin (SB) 80–0107, providing instructions for repetitive inspections of the affected rods and tubings. As this was considered to be a potentially unsafe condition, Registro Aeronautico Italiano (RAI), the predecessor of ENAC (Ente Nazionale per l'Aviazione Civile), issued Prescrizione di Aeronavigabilità (PA) No. 1999–219, which required the repetitive inspections as detailed in PAI SB 80–0107 and, depending on findings, replacement of rod or tubing.

Since that AD was issued, the repetitive inspections of SB 80–0107 have been included as regular tasks into the maintenance schedule of both Avanti and Avanti II aeroplanes. In addition, no other cases of brake system bent rods have been reported, nor have any rods been replaced for damage in the P.180 fleet since that occurrence. Based on the available information, this is no longer considered to be an unsafe condition. Prompted by this determination, PAI issued Revision ZZ of SB 80–0107, which cancels the original SB 80–0107.

For the reasons described above, this Notice is issued to cancel ENAC PA no. 1999–219 dated 03 May 1999.

You may obtain further information by examining the MCAI in the AD docket.

FAA's Determination

We propose this AD because we evaluated all available information and determined the existing AD is no longer necessary.

Proposed AD Requirements

This proposed AD would rescind AD 2000–07–11 (65 FR 19305, April 11, 2000).

Authority for this Rulemaking

Title 49 of the United States Code specifies the FAA's authority to issue rules on aviation safety. Subtitle I, section 106, describes the authority of the FAA Administrator. ''Subtitle VII: Aviation Programs'', describes in more detail the scope of the Agency's authority.

We are issuing this rulemaking under the authority described in ''Subtitle VII, Part A, Subpart III, Section 44701: General requirements.'' Under that section, Congress charges the FAA with promoting safe flight of civil aircraft in air commerce by prescribing regulations for practices, methods, and procedures the Administrator finds necessary for safety in air commerce. This regulation is within the scope of that authority because it addresses an unsafe condition that is likely to exist or develop on products identified in this rulemaking action.

Regulatory Findings

We determined that this proposed AD would not have federalism implications under Executive Order 13132. This proposed AD would not have a substantial direct effect on the States, on the relationship between the national Government and the States, or on the distribution of power and responsibilities among the various levels of government.

For the reasons discussed, I certify this proposed regulation:

(1) Is not a ''significant regulatory action'' under Executive Order 12866,

(2) Is not a ''significant rule'' under the DOT Regulatory Policies and Procedures (44 FR 11034, February 26, 1979),

(3) Will not affect intrastate aviation in Alaska to the extent that it justifies making a regulatory distinction, and

(4) Will not have a significant economic impact, positive or negative, on a substantial number of small entities under the criteria of the Regulatory Flexibility Act.

List of Subjects in 14 CFR Part 39

Air transportation, Aircraft, Aviation safety, Incorporation by reference, Safety.

The Proposed Amendment

Accordingly, under the authority delegated to me by the Administrator, the FAA proposes to amend 14 CFR part 39 as follows:

PART 39—AIRWORTHINESS DIRECTIVES

1. The authority citation for part 39 continues to read as follows:

Authority: 49 U.S.C. 106(g), 40113, 44701.

§ 39.13 [Amended]

2. The FAA amends § 39.13 by removing Amendment 39–11665 (65 FR 19305, April 11, 2000), and adding the following new AD:

Piaggio Aero Industries S.p.A.: Docket No. FAA–2012–0755; Directorate Identifier 99–CE–65–AD.

(a) Comments Due Date

We must receive comments by September 4, 2012.

(b) Applicability

This AD applies to Piaggio Aero Industries S.p.A. Model P–180 airplanes, all serial numbers, certificated in any category.

(c) Affected ADs

This AD rescinds AD 2000–07–11 (65 FR 19305, April 11, 2000).

(d) Subject

Joint Aircraft System Component (JASC)/Air Transport Association (ATA) of America Code 32; Landing Gear.

Issued in Kansas City, Missouri, on July 13, 2012.

Earl Lawrence,

Manager, Small Airplane Directorate, Aircraft Certification Service.

[FR Doc. 2012–17582 Filed 7–18–12; 8:45 am]

BILLING CODE 4910–13–P

DEPARTMENT OF TRANSPORTATION

Federal Aviation Administration

14 CFR Part 39

[Docket No. FAA–2012–0756; Directorate Identifier 2012–CE–012–AD]

RIN 2120–AA64

Airworthiness Directives; Piper Aircraft, Inc. Airplanes

ACTION: Notice of proposed rulemaking (NPRM).

SUMMARY: We propose to adopt a new airworthiness directive (AD) for all Piper Aircraft, Inc. (type certificate previously held by The New Piper Aircraft Inc.) Models PA–18 and PA–19 airplanes. This proposed AD was prompted by incidents of inadvertent magneto switch shut off in flight. This proposed AD would require moving all magneto switches that are now or are at any time located on the left cabin panel, adjacent to the front seat, to the instrument panel. We are proposing this AD to correct the unsafe condition on these products.

DATES: We must receive comments on this proposed AD by September 4, 2012.

ADDRESSES: You may send comments, using the procedures found in 14 CFR 11.43 and 11.45, by any of the following methods:

- *Federal eRulemaking Portal:* Go to *http://www.regulations.gov.* Follow the instructions for submitting comments.
- *Fax:* 202–493–2251.
- *Mail:* U.S. Department of Transportation, Docket Operations, M–30, West Building Ground Floor, Room W12–140, 1200 New Jersey Avenue SE., Washington, DC 20590.
- *Hand Delivery:* Deliver to Mail address above between 9 a.m. and 5 p.m., Monday through Friday, except Federal holidays.

Examining the AD Docket

You may examine the AD docket on the Internet at *http://www.regulations.gov;* or in person at the Docket Management Facility between 9 a.m. and 5 p.m., Monday through Friday, except Federal holidays. The AD docket contains this proposed AD, the regulatory evaluation, any comments received, and other information. The street address for the Docket Office (phone: 800–647–5527) is in the **ADDRESSES** section. Comments will be available in the AD docket shortly after receipt.

FOR FURTHER INFORMATION CONTACT: Gary Wechsler, Aerospace Engineer, FAA, Atlanta Aircraft Certification Office, 1701 Columbia Avenue, College Park, Georgia 30337; phone: (404) 474–5575; fax: (404) 474–5606; email: *gary.wechsler@faa.gov.*

SUPPLEMENTARY INFORMATION:

Comments Invited

We invite you to send any written relevant data, views, or arguments about this proposal. Send your comments to an address listed under the **ADDRESSES** section. Include ''Docket No. FAA–2012–0756; Directorate Identifier 2012–CE–012–AD'' at the beginning of your comments. We specifically invite comments on the overall regulatory, economic, environmental, and energy aspects of this proposed AD. We will consider all comments received by the closing date and may amend this proposed AD because of those comments.

We will post all comments we receive, without change, to *http://www.regulations.gov,* including any personal information you provide. We will also post a report summarizing each substantive verbal contact we receive about this proposed AD.

Discussion

Three forced landings of Piper Aircraft, Inc. Model PA–18 airplanes with magneto switches located on the left cabin panel, adjacent to the front seat, were caused by pilots unknowingly turning off the magneto switches and causing in-flight engine shutdowns. In each event, the pilot was performing other flight tasks, such as re-trimming the airplane, and the pilot's arm and/or article of clothing accidently turned off the magneto switches.

Those parties that may desire an alternative method of compliance (AMOC) are encouraged to work together with pertinent type clubs toward a single global AMOC.

Any Piper Aircraft, Inc. Model PA–18 airplane with the magneto switch currently located away from the left cabin panel, adjacent to the front seat, including those already placed on an airplane's wing root, is not at a high risk of an inadvertent in-flight engine shutdown and loss of flight control and are not the subject of this proposed AD.

This condition, if not corrected, could result in engine shut down and possible loss of control.

FAA's Determination

We are proposing this AD because we evaluated all the relevant information and determined the unsafe condition described previously is likely to exist or develop in other products of the same type design.

Proposed AD Requirements

This proposed AD would require removing the magneto switch and ignition leads from the left cabin panel adjacent to the front seat and install a key-type ignition switch on the instrument panel.

Costs of Compliance

We estimate that this proposed AD affects 295 airplanes of U.S. registry.

We estimate the following costs to comply with this proposed AD:

ESTIMATED COSTS

Action	Labor cost	Parts cost	Cost per product	Cost on U.S. operators
Relocate the magneto switch from the port side interior cabin wall to the instrument panel and replace the magneto switch with a keyed switch.	3.5 work-hours × $85 per hour = $297.50.	$125	$422.50	$124,637.50

Authority for This Rulemaking

Title 49 of the United States Code specifies the FAA's authority to issue rules on aviation safety. Subtitle I, section 106, describes the authority of the FAA Administrator. Subtitle VII: Aviation Programs, describes in more detail the scope of the Agency's authority.

We are issuing this rulemaking under the authority described in Subtitle VII, Part A, Subpart III, Section 44701: ''General requirements.'' Under that section, Congress charges the FAA with promoting safe flight of civil aircraft in air commerce by prescribing regulations for practices, methods, and procedures the Administrator finds necessary for safety in air commerce. This regulation is within the scope of that authority because it addresses an unsafe condition that is likely to exist or develop on products identified in this rulemaking action.

Regulatory Findings

We determined that this proposed AD would not have federalism implications under Executive Order 13132. This proposed AD would not have a substantial direct effect on the States, on the relationship between the national Government and the States, or on the distribution of power and responsibilities among the various levels of government.

For the reasons discussed above, I certify this proposed regulation:

(1) Is not a ''significant regulatory action'' under Executive Order 12866,

(2) Is not a ''significant rule'' under the DOT Regulatory Policies and Procedures (44 FR 11034, February 26, 1979),

(3) Will not affect intrastate aviation in Alaska, and

(4) Will not have a significant economic impact, positive or negative, on a substantial number of small entities under the criteria of the Regulatory Flexibility Act.

List of Subjects in 14 CFR Part 39

Air transportation, Aircraft, Aviation safety, Incorporation by reference, Safety.

The Proposed Amendment

Accordingly, under the authority delegated to me by the Administrator, the FAA proposes to amend 14 CFR part 39 as follows:

PART 39—AIRWORTHINESS DIRECTIVES

1. The authority citation for part 39 continues to read as follows:

Authority: 49 U.S.C. 106(g), 40113, 44701.

§ 39.13 [Amended]

2. The FAA amends § 39.13 by adding the following new airworthiness directive (AD):

Piper Aircraft, Inc. (Type Certificate Previously Held by The New Piper Aircraft Inc.): Docket No. FAA–2012–0756; Directorate Identifier 2012–CE–012–AD.

(a) Comments Due Date

We must receive comments by September 4, 2012.

(b) Affected ADs

None.

(c) Applicability

This AD applies to Piper Aircraft, Inc. (type certificate previously held by The New Piper Aircraft Inc.) Models PA–18, PA–18 ''105'' (Special), PA–18S, PA–18S ''105'' (Special), PA–18A, PA–18 ''125'' (Army L–21A), PA–18S ''125'', PA–18AS ''125'', PA–18 ''135'' (Army L–21B), PA–18A ''135'', PA–18S ''135'', PA–18AS ''135'', PA–18 ''150'', PA–18A ''150'', PA–18S ''150'', PA–18AS ''150'', PA–19 (Army L–18C), and PA–19S airplanes, all serial numbers, that:

(1) Are certificated in any category; and

(2) Are now or at any time equipped with a magneto switch installed on the left cabin panel, adjacent to the front seat.

Note 1 to paragraph (c) of this AD: Model PA–18 airplanes with the magneto switch located away from the left cabin panel, adjacent to the front seat, including those currently placed on an airplane's wing root, are not subject to the requirements of this AD.

(d) Subject

Joint Aircraft System Component (JASC)/Air Transport Association (ATA) of America Code 74, Engine Ignition.

(e) Unsafe Condition

This AD was prompted by incidents of inadvertent magneto switch shut off in flight. We are issuing this AD to prevent engine shut down and possible loss of control.

(f) Compliance

Comply with this AD within the compliance times specified, unless already done.

(g) Relocate the Magneto Switch and Replace With Key-Type Ignition Switch

Within the next 12 months after the effective date of this AD, do the following in accordance with FAA Advisory Circular 43.13–2B, Chapter 11, which can be found at *http://rgl.faa.gov/:*

(1) Remove the magneto switch and ignition leads from the left cabin panel, adjacent to the front seat, install either a Piper part number 15302–02, –04 or –05 (or FAA approved equivalent part number) key-type ignition switch on the instrument panel, not adjacent to or below (the height of) the engine fuel primer, attach ignition leads, maintaining shielded or unshielded configuration existing at time of new switch installation, and secure leads following the procedures in FAA Advisory Circular 43.13–2B, Chapter 11, which can be found at *http://rgl.faa.gov/.*

(2) Perform engine run to verify proper engine operation. Following regular run-up procedures, allow the engine to reach operating temperatures and do a normal magneto check.

(h) Alternative Methods of Compliance (AMOCs)

(1) The Manager, Atlanta Aircraft Certification Office (ACO), FAA, has the authority to approve AMOCs for this AD, if requested using the procedures found in 14 CFR 39.19. In accordance with 14 CFR 39.19, send your request to your principal inspector or local Flight Standards District Office, as appropriate. If sending information directly to the manager of the ACO, send it to the attention of the person identified in the Related Information section of this AD.

(2) Before using any approved AMOC, notify your appropriate principal inspector, or lacking a principal inspector, the manager of the local flight standards district office/certificate holding district office.

(i) Related Information

For more information about this AD, contact Gary Wechsler, Aerospace Engineer, FAA, Atlanta ACO, 1701 Columbia Avenue, College Park, Georgia 30337; phone: (404) 474–5575; fax: (404) 474–5606; email: *gary.wechsler@faa.gov.*

Issued in Kansas City, Missouri, on July 13, 2012.

Earl Lawrence,

Manager, Small Airplane Directorate, Aircraft Certification Service.

[FR Doc. 2012–17589 Filed 7–18–12; 8:45 am]

BILLING CODE 4910–13–P

DEPARTMENT OF TRANSPORTATION

Federal Aviation Administration

14 CFR Part 39

[Docket No. FAA–2012–0721; Directorate Identifier 2012–NM–076–AD]

RIN 2120–AA64

Airworthiness Directives; Bombardier, Inc. Airplanes

AGENCY: Federal Aviation Administration (FAA), DOT.

ACTION: Notice of proposed rulemaking (NPRM).

SUMMARY: We propose to adopt a new airworthiness directive (AD) for certain Bombardier, Inc. Model CL–600–2B19 (Regional Jet Series 100 & 440) airplanes. This proposed AD was prompted by reports that airplanes with a Class C cargo (baggage) compartment have liners that do not meet flammability requirements. This proposed AD would require replacing the existing cargo compartment liners with liners that comply. We are proposing this AD to prevent inadequate fire protection in the cargo compartment and consequent uncontrolled fire.

DATES: We must receive comments on this proposed AD by September 4, 2012.

ADDRESSES: You may send comments by any of the following methods:

- *Federal eRulemaking Portal:* Go to *http://www.regulations.gov.* Follow the instructions for submitting comments.
- *Fax:* (202) 493–2251.
- *Mail:* U.S. Department of Transportation, Docket Operations, M–30, West Building Ground Floor, Room W12–140, 1200 New Jersey Avenue SE., Washington, DC 20590.
- *Hand Delivery:* U.S. Department of Transportation, Docket Operations, M–30, West Building Ground Floor, Room W12–140, 1200 New Jersey Avenue SE., Washington, DC, between 9 a.m. and 5 p.m., Monday through Friday, except Federal holidays.

For Bombardier service information identified in this proposed AD, contact Bombardier, Inc., 400 Côte-Vertu Road West, Dorval, Québec H4S 1Y9, Canada; telephone 514–855–5000; fax 514–855–7401; email

thd.crj@aero.bombardier.com; Internet *http://www.bombardier.com.* For COMTEK service information identified in this proposed AD, contact Comtek Aftermarket Structures, 1360 Artisans Court, Burlington, Ontario, Canada, L7L 5Y2; telephone 905–331–8121; fax 905–331–8125; email *abrown@comtekadvanced.com*; Internet *http://www.comtekadvanced.com.* You may review copies of the referenced service information at the FAA, Transport Airplane Directorate, 1601 Lind Avenue SW., Renton, Washington. For information on the availability of this material at the FAA, call 425–227–1221.

Examining the AD Docket

You may examine the AD docket on the Internet at *http://www.regulations.gov;* or in person at the Docket Operations office between 9 a.m. and 5 p.m., Monday through Friday, except Federal holidays. The AD docket contains this proposed AD, the regulatory evaluation, any comments received, and other information. The street address for the Docket Operations office (telephone (800) 647–5527) is in the **ADDRESSES** section. Comments will be available in the AD docket shortly after receipt.

FOR FURTHER INFORMATION CONTACT: Cesar Gomez, Aerospace Engineer, Airframe and Mechanical Systems Branch, ANE–171, FAA, New York Aircraft Certification Office, 1600 Stewart Avenue, Suite 410, Westbury, New York 11590; telephone 516–228–7318; fax 516–794–5531.

SUPPLEMENTARY INFORMATION:

Comments Invited

We invite you to send any written relevant data, views, or arguments about this proposed AD. Send your comments to an address listed under the **ADDRESSES** section. Include ''Docket No. FAA–2012–0721; Directorate Identifier 2012–NM–076–AD'' at the beginning of your comments. We specifically invite comments on the overall regulatory, economic, environmental, and energy aspects of this proposed AD. We will consider all comments received by the closing date and may amend this proposed AD based on those comments.

We will post all comments we receive, without change, to *http://www.regulations.gov,* including any personal information you provide. We will also post a report summarizing each substantive verbal contact we receive about this proposed AD.

Discussion

Transport Canada Civil Aviation (TCCA), which is the aviation authority for Canada, has issued Canadian AD CF–2012–11, dated March 23, 2012 (referred to after this as ''the MCAI''), to correct an unsafe condition for the specified products. The MCAI states:

> It was found that the cargo compartment liners installed on CL–600–2B19 configured with Class C cargo compartment do not all meet the flammability requirements. Non-compliant cargo compartment liners may not provide adequate fire protection and could lead to an uncontrolled baggage bay fire.
>
> This AD mandates the replacement of existing cargo compartment liners with compliant cargo compartment liners.
>
> Aeroplanes modified with [TCCA] Supplemental Type Certificate (STC) Number SA01–19 Issue No. 1 [corresponding FAA STC ST01292NY, amended July 7, 2003 *http://www.airweb.faa.gov/Regulatory_and_Guidance_Library/rgstc.nsf/0/1BB5140B1D3A130086256D7A006DF851?OpenDocument&Highlight=st01292ny*] Cargo Liner Replacement Panels are also affected by this AD.

You may obtain further information by examining the MCAI in the AD docket.

Relevant Service Information

Bombardier, Inc. issued the following service information:

- Bombardier Service Bulletin 601R–25–187, Revision A, dated September 1, 2011;
- Bombardier Service Bulletin 601R–25–198, dated September 1, 2011; and
- Bombardier Service Bulletin 601R–25–199, dated September 1, 2011.

Comtek Aftermarket Structures issued COMTEK Service Bulletin COMSB–25–52–001, Revision A, dated December 29, 2011.

The actions described in this service information are intended to correct the unsafe condition identified in the MCAI.

FAA's Determination and Requirements of This Proposed AD

This product has been approved by the aviation authority of another country, and is approved for operation in the United States. Pursuant to our bilateral agreement with the State of Design Authority, we have been notified of the unsafe condition described in the MCAI and service information referenced above. We are proposing this AD because we evaluated all pertinent information and determined an unsafe condition exists and is likely to exist or develop on other products of the same type design.

Costs of Compliance

Based on the service information, we estimate that this proposed AD would affect about 574 products of U.S. registry. We also estimate that it would take about 87 work-hours per product to comply with the basic requirements of this proposed AD. The average labor rate is $85 per work-hour. Required parts would cost about $43,559 per product. Where the service information lists required parts costs that are covered under warranty, we have assumed that there will be no charge for these parts. As we do not control warranty coverage for affected parties, some parties may incur costs higher than estimated here. Based on these figures, we estimate the cost of the proposed AD on U.S. operators to be $29,247,596, or $50,954 per product.

Authority for This Rulemaking

Title 49 of the United States Code specifies the FAA's authority to issue rules on aviation safety. Subtitle I, section 106, describes the authority of the FAA Administrator.

''Subtitle VII: Aviation Programs,'' describes in more detail the scope of the Agency's authority.

We are issuing this rulemaking under the authority described in ''Subtitle VII, Part A, Subpart III, Section 44701: General requirements.'' Under that section, Congress charges the FAA with promoting safe flight of civil aircraft in air commerce by prescribing regulations for practices, methods, and procedures the Administrator finds necessary for safety in air commerce. This regulation is within the scope of that authority because it addresses an unsafe condition that is likely to exist or develop on products identified in this rulemaking action.

Regulatory Findings

We determined that this proposed AD would not have federalism implications under Executive Order 13132. This proposed AD would not have a substantial direct effect on the States, on the relationship between the national Government and the States, or on the distribution of power and responsibilities among the various levels of government.

For the reasons discussed above, I certify this proposed regulation:

1. Is not a ''significant regulatory action'' under Executive Order 12866;

2. Is not a ''significant rule'' under the DOT Regulatory Policies and Procedures (44 FR 11034, February 26, 1979);

3. Will not affect intrastate aviation in Alaska; and

4. Will not have a significant economic impact, positive or negative, on a substantial number of small entities under the criteria of the Regulatory Flexibility Act.

We prepared a regulatory evaluation of the estimated costs to comply with

this proposed AD and placed it in the AD docket.

List of Subjects in 14 CFR Part 39

Air transportation, Aircraft, Aviation safety, Incorporation by reference, Safety.

The Proposed Amendment

Accordingly, under the authority delegated to me by the Administrator, the FAA proposes to amend 14 CFR part 39 as follows:

PART 39—AIRWORTHINESS DIRECTIVES

1. The authority citation for part 39 continues to read as follows:

Authority: 49 U.S.C. 106(g), 40113, 44701.

§ 39.13 [Amended]

2. The FAA amends § 39.13 by adding the following new AD:

Bombardier, Inc.: Docket No. FAA–2012–0721; Directorate Identifier 2012–NM–076–AD.

(a) Comments Due Date

We must receive comments by September 4, 2012.

(b) Affected ADs

None.

(c) Applicability

This AD applies to Bombardier, Inc. Model CL–600–2B19 (Regional Jet Series 100 & 440) airplanes, certificated in any category; serial numbers 7003 and subsequent, configured with a Class C cargo compartment, including airplanes modified by Supplemental Type Certificate (STC) ST01292NY amended July 7, 2003.

(d) Subject

Air Transport Association (ATA) of America Code 25, Equipment/furnishings.

(e) Reason

This AD was prompted by reports that airplanes with a Class C cargo (baggage) compartment have liners that do not meet flammability requirements. We are issuing this AD to prevent inadequate fire protection in the cargo compartment and consequent uncontrolled fire.

(f) Compliance

You are responsible for having the actions required by this AD performed within the compliance times specified, unless the actions have already been done.

(g) Actions

Within 28 months after the effective date of this AD, replace the cargo compartment liners in accordance with the Accomplishment Instructions of the applicable service bulletin specified in paragraphs (g)(1) through (g)(3) of this AD. For airplanes that do not have a configuration specified in paragraphs (g)(1) through (g)(3) of this AD: Prior to accomplishing the replacement, convert the cargo compartment liner to one of the configurations specified in paragraphs (g)(1) through (g)(3) of this AD, in accordance with a method approved by the FAA or Transport Canada Civil Aviation (TCCA) (or its delegated agent). To meet the requirements of this AD, the applicable Bombardier Service Bulletin or COMTEK Service Bulletin must be followed in its entirety, with no mixing of Bombardier-supplied or COMTEK-supplied liners.

(1) For airplanes with North American cargo compartment configuration: Bombardier Service Bulletin 601R–25–187, Revision A, dated September 1, 2011; or COMTEK Service Bulletin COMSB–25–52–001, Revision A, dated December 29, 2011.

(2) For airplanes with European cargo compartment configuration: Bombardier Service Bulletin 601R–25–198, dated September 1, 2011.

(3) For airplanes with Universal cargo compartment configuration: Bombardier Service Bulletin 601R–25–199, dated September 1, 2011.

Note (1) to paragraph (g) of this AD: COMTEK Service Bulletin COMSB–25–52–001, Revision A, dated December 29, 2011, installs STC ST01292NY amended March 21, 2012 (corresponds to Transport Canada Civil Aviation (TCCA) STC SA01–19, Issue 2) flammability-compliant cargo liner replacement panels.

(h) Credit for Previous Actions

This paragraph provides credit for certain actions specified in paragraph (g)(1) of this AD, if those actions were performed before the effective date of this AD using Bombardier Service Bulletin 601R–25–187, dated July 21, 2011.

(i) Parts Installation Prohibition

(1) As of the effective date of this AD, no person may install a cargo compartment liner, identified as ''Pre-SB Part Number'' in paragraph 1.M. of the Bombardier service bulletins identified in paragraphs (g)(1) through (g)(3) of this AD; or ''Pre-SB P/N'' in paragraph 3.D. of COMTEK Service Bulletin COMSB–25–52–001, Revision A, dated December 29, 2011; or FAA STC ST01292NY amended July 7, 2003 *http://www.airweb.faa.gov/Regulatory_and_Guidance_Library/rgstc.nsf/0/1BB5140B1D3A130086256D7A006DF851?OpenDocument&Highlight=st01292ny;* on any airplane.

(j) Other FAA AD Provisions

The following provisions also apply to this AD:

(1) Alternative Methods of Compliance (AMOCs): The Manager, New York Aircraft Certification Office (ACO), ANE–170, FAA, has the authority to approve AMOCs for this AD, if requested using the procedures found in 14 CFR 39.19. In accordance with 14 CFR 39.19, send your request to your principal inspector or local Flight Standards District Office, as appropriate. If sending information directly to the ACO, send it to ATTN: Program Manager, Continuing Operational Safety, FAA, New York ACO, 1600 Stewart Avenue, Suite 410, Westbury, New York 11590; telephone 516–228–7300; fax 516–794–5531. Before using any approved AMOC, notify your appropriate principal inspector, or lacking a principal inspector, the manager of the local flight standards district office/certificate holding district office. The AMOC approval letter must specifically reference this AD.

(2) Airworthy Product: For any requirement in this AD to obtain corrective actions from a manufacturer or other source, use these actions if they are FAA-approved. Corrective actions are considered FAA-approved if they are approved by the State of Design Authority (or their delegated agent). You are required to assure the product is airworthy before it is returned to service.

(k) Related Information

(1) Refer to MCAI Canadian Airworthiness Directive CF–2012–11, dated March 23, 2012, and the service information identified in paragraphs (k)(1)(i) through (k)(1)(iv) of this AD, for related information.

(i) Bombardier Service Bulletin 601R–25–187, Revision A, dated September 1, 2011.

(ii) Bombardier Service Bulletin 601R–25–198, dated September 1, 2011.

(iii) Bombardier Service Bulletin 601R–25–199, dated September 1, 2011.

(iv) COMTEK Service Bulletin COMSB–25–52–001, Revision A, dated December 29, 2011.

(2) For Bombardier service information identified in this AD, contact Bombardier, Inc., 400 Côte-Vertu Road West, Dorval, Québec H4S 1Y9, Canada; telephone 514–855–5000; fax 514–855–7401; email *thd.crj@aero.bombardier.com;* Internet *http://www.bombardier.com.* For COMTEK service information identified in this AD, contact Comtek Aftermarket Structures, 1360 Artisans Court, Burlington, Ontario, Canada, L7L 5Y2; telephone 905–331–8121; fax 905–331–8125; email *abrown@comtekadvanced.com;* Internet *http://www.comtekadvanced.com.* You may review copies of the referenced service information at the FAA, Transport Airplane Directorate, 1601 Lind Avenue SW., Renton, Washington. For information on the availability of this material at the FAA, call 425–227–1221.

Issued in Renton, Washington, on July 6, 2012.

Kalene C. Yanamura,

Acting Manager, Transport Airplane Directorate, Aircraft Certification Service.

[FR Doc. 2012–17608 Filed 7–18–12; 8:45 am]

BILLING CODE 4910–13–P

DEPARTMENT OF TRANSPORTATION

Federal Aviation Administration

14 CFR Part 39

[Docket No. FAA–2012–0746; Directorate Identifier 2008–SW–35–AD]

RIN 2120–AA64

Airworthiness Directives; MD Helicopters, Inc. (MDHI) Helicopters

AGENCY: Federal Aviation Administration (FAA), DOT.

ACTION: Notice of Proposed Rulemaking (NPRM).

SUMMARY: We propose to adopt a new airworthiness directive (AD) for MDHI Model 500N, 600N, and MD900 helicopters to require determining the cure date for each NOTAR fan blade tension-torsion strap (T–T strap), establishing a calendar-time retirement life for certain T–T straps, reducing the retirement life of certain T–T straps, marking each T–T strap with the expiration date, creating a component record card for each T–T strap, and revising the airworthiness limitations section of the maintenance manual to reflect the changes to the retirement life. This proposal is prompted by a report from the T–T strap manufacturer that, over a period of time, moisture may reduce the strength of a T–T strap. The proposed actions are intended to prevent failure of a T–T strap, loss of directional control and subsequent loss of control of the helicopter.

DATES: We must receive comments on this proposed AD by September 17, 2012.

ADDRESSES: You may send comments by any of the following methods:

- *Federal eRulemaking Docket:* Go to *http://www.regulations.gov.* Follow the online instructions for sending your comments electronically.
- *Fax:* 202–493–2251.
- *Mail:* Send comments to the U.S. Department of Transportation, Docket Operations, M–30, West Building Ground Floor, Room W12–140, 1200 New Jersey Avenue SE., Washington, DC 20590–0001.
- *Hand Delivery:* Deliver to the ''Mail'' address between 9 a.m. and 5 p.m., Monday through Friday, except Federal holidays.

Examining the AD Docket: You may examine the AD docket on the Internet at *http://www.regulations.gov* or in person at the Docket Operations Office between 9 a.m. and 5 p.m., Monday through Friday, except Federal holidays. The AD docket contains this proposed AD, the economic evaluation, any comments received, and other information. The street address for the Docket Operations Office (telephone 800–647–5527) is in the **ADDRESSES** section. Comments will be available in the AD docket shortly after receipt.

For service information identified in this proposed AD, contact MD Helicopters, Inc., Attn: Customer Support Division, 4555 E. McDowell Rd., Mail Stop M615, Mesa, Arizona 85215–9734, telephone 1–800–388–3378, fax 480–346–6813, or on the Web at *http://www.mdhelicopters.com.* You may review a copy of the referenced service information at the FAA, Office of the Regional Counsel, Southwest Region, 2601 Meacham Blvd., Room 663, Fort Worth, Texas 76137.

FOR FURTHER INFORMATION CONTACT: John Cecil, Aviation Safety Engineer, FAA, Los Angeles Aircraft Certification Office, Airframe Branch, 3960 Paramount Blvd., Lakewood, California 90712–4137; telephone 562–627–5228, fax 562- 627–5210; email: *john.cecil@faa.gov.*

SUPPLEMENTARY INFORMATION:

Comments Invited

We invite you to participate in this rulemaking by submitting written comments, data, or views. We also invite comments relating to the economic, environmental, energy, or federalism impacts that might result from adopting the proposals in this document. The most helpful comments reference a specific portion of the proposal, explain the reason for any recommended change, and include supporting data. To ensure the docket does not contain duplicate comments, commenters should send only one copy of written comments, or if comments are filed electronically, commenters should submit only one time.

We will file in the docket all comments that we receive, as well as a report summarizing each substantive public contact with FAA personnel concerning this proposed rulemaking. Before acting on this proposal, we will consider all comments we receive on or before the closing date for comments. We will consider comments filed after the comment period has closed if it is possible to do so without incurring expense or delay. We may change this proposal in light of the comments we receive.

Discussion

The manufacturer has issued service information that indicates that it and its supplier, Lord Corporation, have determined that certain T–T straps can, over time, absorb moisture that can weaken the T–T strap. It indicates that a T–T strap failure can cause decreased directional control of the helicopter. Accordingly, it specifies, in addition to the current time-in-service (TIS) retirement life limit, an additional calendar-time retirement life limit for four part-numbered T–T straps and a reduced retirement life of 2,500 hours TIS for T–T strap, part number (P/N) 500N5311–5, if it is installed on a Model 500N or 600N helicopter after it has been installed on a Model MD900 helicopter. The calendar life would start when the package was opened.

This action proposes to adopt these new calendar-life limits for T–T straps, P/N 500N5311–5, P/N 900R3442009–101,
P/N 900R3442009–103, and P/N 900R6442009–103, measured from the manufacturer's cure date or the date the package containing the T–T strap was opened exposing it to the environment outside the package. We are also proposing to adopt requirements that a component record card be created and that the T–T straps be marked with the retirement life limit calendar date (expiration date).

For the MDHI Model MD900 helicopters, AD 2006–18–01 (71 FR 51095, August 29, 2006) already contains a revised TIS life limits for T–T straps, P/N 900R3442009–103 and P/N 900R6442009–103 and additional inspection requirements for all four affected T–T straps, P/N 500N5311–5, P/N 900R3442009–101, P/N 900R3442009–103, and P/N 900R6442009–103. The requirements of that AD 2006–18–01 would remain in effect.

FAA's Determination

We are proposing this AD because we evaluated all known relevant information and determined that an unsafe condition exists and is likely to exist or develop on other products of these same type designs.

Related Service Information

We have reviewed one MDHI service bulletin, which contains two service bulletin numbers, SB500N–029R3, applicable to MDHI Model 500N helicopters; and SB600N–046R3, applicable to MDHI Model 600N helicopters, dated July 9, 2008. We have also reviewed MDHI SB900–107R1, dated March 14, 2008, applicable to MDHI Model MD900 helicopters. All of the service bulletins describe procedures for establishing a retirement life for each affected T–T strap by determining the manufacturer's cure date and marking the T–T strap with an expiration date; creating a component record card for each affected T–T strap; replacing T–T straps that have been in service beyond their revised life limit; and recording compliance with their service information in the Rotorcraft Log Book.

Proposed AD Requirements

This proposed AD would require, within six months:

- Determining the manufacturer's cure date for T–T strap, P/N 500N5311–5 (installed on MDHI Model 500N and

MDHI 600N helicopters), and P/N 500N5311–5, P/N 900R3442009–101, P/N 900R3442009–103, or P/N 900R6442009–103 (installed on MDHI Model MD900 helicopters);

• Creating a component record card for each affected T–T strap and recording the expiration date on the card;

• Revising the Airworthiness Limitations Section of the applicable maintenance manual with the additional or revised retirement life limit for the T–T straps; and

• Before a T–T strap is installed on any Model 500N, 600N, or MD900 helicopter, the T–T strap be marked with the expiration date.

Differences Between This Proposed AD and the Service Information

This proposed AD differs from the previously described service bulletins as follows:

• This AD proposes requirements for T–T straps that are installed or will be installed on the affected helicopters, but does not address a part that is in storage.

• For a T–T strap with five or more calendar years from the manufacturer's cure date, this AD proposes, before further flight, replacing the T–T strap with an airworthy T–T strap. The service bulletins specify the T–T strap to be replaced within six, 12, or 24 months, depending on the manufacturing cure date.

• The service bulletins specify to send removed parts to the manufacturer, and this proposed AD does not require this action.

• This AD proposes reducing the life limit for any T–T strap, P/N 500N5311–5, to 2500 hours TIS if the T–T strap has been installed on a MDHI Model MD900 helicopter.

Costs of Compliance

We estimate that this proposed AD would affect 111 helicopters of U.S. registry, including 73 helicopters in the combined MDHI Model 500N and MDHI Model 600N fleet, and 38 MDHI Model MD900 helicopters. Determining the manufacturer's cure date, the expiration date, marking an expiration date on the T–T strap, creating the component record card, revising the applicable airworthiness limitations section of the maintenance manual, and re-installing the T–T strap would take about 40 work-hours per helicopter for Model 500N and Model 600N helicopters, and 32 work-hours per helicopter for Model MD900 helicopters, at an average labor rate of $85 per work-hour. Required parts would cost about $1,340 per T–T strap. Based on these figures, the total cost impact of the proposed AD on U.S. operators would be about $543,180 for the entire fleet, assuming all T–T straps would be marked, and assuming 11 helicopters would need T–T strap replaced (13 T–T straps per helicopter).

Authority for This Rulemaking

Title 49 of the United States Code specifies the FAA's authority to issue rules on aviation safety. Subtitle I, section 106, describes the authority of the FAA Administrator. ''Subtitle VII: Aviation Programs,'' describes in more detail the scope of the Agency's authority.

We are issuing this rulemaking under the authority described in ''Subtitle VII, Part A, Subpart III, Section 44701: General requirements.'' Under that section, Congress charges the FAA with promoting safe flight of civil aircraft in air commerce by prescribing regulations for practices, methods, and procedures the Administrator finds necessary for safety in air commerce. This regulation is within the scope of that authority because it addresses an unsafe condition that is likely to exist or develop on products identified in this rulemaking action.

Regulatory Findings

We determined that this proposed AD would not have federalism implications under Executive Order 13132. This proposed AD would not have a substantial direct effect on the States, on the relationship between the national Government and the States, or on the distribution of power and responsibilities among the various levels of government.

For the reasons discussed, I certify this proposed regulation:

1. Is not a ''significant regulatory action'' under Executive Order 12866;

2. Is not a ''significant rule'' under the DOT Regulatory Policies and Procedures (44 FR 11034, February 26, 1979);

3. Will not affect intrastate aviation in Alaska to the extent that it justifies making a regulatory distinction; and

4. Will not have a significant economic impact, positive or negative, on a substantial number of small entities under the criteria of the Regulatory Flexibility Act.

We prepared an economic evaluation of the estimated costs to comply with this proposed AD and placed it in the AD docket.

List of Subjects in 14 CFR Part 39

Air transportation, Aircraft, Aviation safety, Incorporation by Reference, Safety.

The Proposed Amendment

Accordingly, under the authority delegated to me by the Administrator, the FAA proposes to amend 14 CFR part 39 as follows:

PART 39—AIRWORTHINESS DIRECTIVES

1. The authority citation for part 39 continues to read as follows:

Authority: 49 U.S.C. 106(g), 40113, 44701.

§ 39.13 [Amended]

2. The FAA amends § 39.13 by adding the following new airworthiness directive (AD):

MD Helicopters, Inc. (MDHI): Docket No. FAA–2012–0746; Directorate Identifier 2008–SW–35–AD.

(a) Applicability

MDHI Model 500N and 600N helicopters, with a NOTAR fan blade tension-torsion strap (T–T strap), part number (P/N) 500N5311–5; and MDHI Model MD900 helicopters, with a T–T strap, P/N 500N5311–5, P/N 900R3442009–101, P/N 900R3442009–103, or P/N 900R6442009–103; certificated in any category.

(b) Unsafe Condition

This AD defines the unsafe condition as a decrease, over time, in the strength of a T–T strap caused by moisture. This condition could result in failure of a T–T strap, loss of directional control, and subsequent loss of control of the helicopter.

(c) Compliance

You are responsible for performing each action required by this AD within the specified compliance time unless it has already been accomplished prior to that time.

(d) Required Actions

(1) Within six months, determine the manufacturer's cure date of each of the 13 T–T straps.

(i) For a T–T strap with five or more calendar years from the manufacturer's cure date, before further flight, replace the T–T strap with an airworthy T–T strap.

(ii) For a T–T strap with less than five calendar years from the manufacturer's cure date, mark the expiration date on the T–T strap face in permanent ink.

(2) Thereafter, before installing a T–T strap, mark the expiration date on the T–T strap using permanent ink. The expiration date is five years from the date the T–T strap package was opened, or if that date was not recorded, five years from the manufacturer's cure date.

(3) On or before the date you comply with paragraph (d)(1) or (d)(2) of this AD, create a component record card for each T–T strap and record on the card the manufacturer's cure date or the date that the T–T strap package was opened, if that date was recorded previously, and the T–T strap expiration date.

(4) This AD revises the Airworthiness Limitations section of the maintenance manual by establishing:

(i) A calendar life limit for the T–T straps, P/N 500N5311–5, 900R3442009–101, 900R3442009–103, and 900R6442009–103 of

five years from the date the T–T strap package was opened, or if that date was not recorded, five years from the manufacturer's cure date.

(ii) A 2,500 hour time-in-service (TIS) life limit for any T–T straps, P/N 500N5311–5, installed on a Model 500N or Model 600N helicopter that was previously installed on a Model MD900 helicopter.

Note to paragraph (d) of this AD: For the MDHI Model MD900 helicopters, AD 2006–18–01 (71 FR 51095, August 29, 2006) contains additional TIS life limits for T–T straps, P/N 900R3442009–103 and P/N 900R6442009–103 and additional inspection requirements for all four affected T–T straps, P/N 500N5311–5, P/N 900R3442009–101, P/N 900R3442009–103, and P/N 900R6442009–103.

(e) Alternative Methods of Compliance (AMOC)

(1) The Manager, Los Angeles Aircraft Certification Office, FAA, may approve AMOCs for this AD. Send your proposal to: John Cecil, Aviation Safety Engineer, FAA, Los Angeles Aircraft Certification Office, Airframe Branch, 3960 Paramount Blvd., Lakewood, California 90712–4137; telephone 562–627–5228, fax 562–627–5210; email: *john.cecil@faa.gov.*

(2) For operations conducted under a 14 CFR part 119 operating certificate or under 14 CFR part 91, subpart K, we suggest that you notify your principal inspector, or lacking a principal inspector, the manager of the local flight standards district office or certificate holding district office before operating any aircraft complying with this AD through an AMOC.

(f) Additional Information

MDHI has issued one service bulletin with two numbers, SB500N–029R3 for the Model 500N helicopters, and SB600N–046R3 for the Model 600N helicopters, dated July 9, 2008. MD Helicopters, Inc. has also issued SB900–107R1, dated March 14, 2008, for the Model MD900 helicopters. These service bulletins, which are not incorporated by reference, contain information related to the subject of this AD. For this service information, contact MD Helicopters, Inc., Attn: Customer Support Division, 4555 E. McDowell Rd., Mail Stop M615, Mesa, Arizona 85215–9734, telephone 1–800–388–3378, fax 480–346–6813, or on the web at *http://www.mdhelicopters.com.* You may review a copy of this information at the FAA, Office of the Regional Counsel, Southwest Region, 2601 Meacham Blvd., Room 663, Fort Worth, Texas 76137.

(g) Subject

Joint Aircraft Service Component (JASC) Code: 6410: Tail rotor blades.

Issued in Fort Worth, Texas, on July 10, 2012.

Kim Smith,

Manager, Rotorcraft Directorate, Aircraft Certification Service.

[FR Doc. 2012–17616 Filed 7–18–12; 8:45 am]

BILLING CODE 4910–13–P

DEPARTMENT OF THE TREASURY

Internal Revenue Service

26 CFR Parts 1 and 301

[REG–153627–08]

RIN–1545–BI40

Reporting and Notice Requirements for Deferred Vested Benefits Under Section 6057; Correction

AGENCY: Internal Revenue Service (IRS), Treasury.

ACTION: Correction to notice of proposed rulemaking.

SUMMARY: This document corrects a notice of proposed rulemaking (REG–153627–08) that was published in the **Federal Register** on Thursday, June 21, 2012 (77 FR 37352), that would provide guidance relating to automatic extensions of time for filing certain employee plan returns by adding the Form 8955–SSA, ''Annual Registration Statement Identifying Separated Participants With Deferred Vested Benefits,'' to the list of forms that are covered by the Income Tax Regulations on automatic extensions.

FOR FURTHER INFORMATION CONTACT: William Gibbs, Sarah Bolen, or Pamela Kinard, (202) 622–6060 (not a toll-free number).

SUPPLEMENTARY INFORMATION:

Background

The notice of proposed rulemaking (REG–153627–08) that is the subject of this correction is under section 6057 of the Internal Revenue Code.

Need for Correction

As published, REG–153627–08 contains an error that may prove to be misleading and is in need of clarification.

Correction of Publication

Accordingly, the publication of the notice of proposed rulemaking (REG–153627–08) that was the subject of FR. Doc. 2012–15068, is corrected as follows:

On page 37354, column 1, in the preamble, under the paragraph heading ''Background'', line four of the column, the language ''Employee Benefit Returns,''and file the'' is corrected to read, ''Employee Plan Returns,''and file the''.

LaNita Van Dyke,

Chief, Publications and Regulations Branch, Legal Processing Division, Associate Chief Counsel (Procedure and Administration).

[FR Doc. 2012–17545 Filed 7–18–12; 8:45 am]

BILLING CODE 4830–01–P

DEPARTMENT OF LABOR

Occupational Safety and Health Administration

29 CFR Part 1952

[Docket ID. OSHA 2012–0029]

RIN 1218–AC78

Hawaii State Plan for Occupational Safety and Health; Proposed Modification of 18(e) Plan Approval

AGENCY: Occupational Safety and Health Administration (OSHA), Department of Labor.

ACTION: Notice of opportunity to request informal public hearing; request for written comments.

SUMMARY: Hawaii administers an occupational safety and health state plan approved by federal OSHA. During the past three years, the state plan has faced significant budgetary constraints and staffing challenges, and has requested federal OSHA assistance to ensure that workers are afforded adequate worker protection during this period. The Hawaii Director of Labor and Industrial Relations has requested a temporary modification of the state plan's approval status from final approval to initial approval, to permit exercise of supplemental federal enforcement and to allow Hawaii sufficient time and assistance to strengthen and improve its state plan performance. Hawaii has pledged to accomplish the necessary corrective action to regain final approval status in a timely manner. OSHA is soliciting written comments to ensure that all relevant information, views and data are available to the Assistant Secretary during this proceeding. Members of the public may also submit requests for an informal hearing, which will be scheduled if the Assistant Secretary finds that substantial issues are raised that necessitate a hearing.

DATES: Comments and requests for an informal hearing must be received by August 23, 2012.

ADDRESSES: Written comments: You may submit comments, identified by docket number OSHA–2012–0029, or regulatory information number (RIN) 1218–AC78, by any of the following methods:

Electronically: You may submit comments and attachments electronically at *http://www.regulations.gov,* which is the Federal eRulemaking Portal. Follow the instructions on-line for making electronic submissions; or

Fax: If your submission, including attachments, does not exceed 10 pages, you may fax them to the OSHA Docket Office at (202) 693–1648; or

U.S. mail, hand delivery, express mail, messenger or courier service: You must submit your comments and attachments to the OSHA Office, Docket Number OSHA–2012–0029, U.S. Department of Labor, Room N–2625, 200 Constitution Avenue NW., Washington, DC 20210; telephone (202) 693–2350 (OSHA's TTY number is (877) 889–5627). Deliveries (hand, express mail, messenger and courier service) are accepted during the Department of Labor's and Docket Office's normal business hours, 8:15 a.m.–4:45 p.m., EDT.

Instructions for submitting comments: All submissions must include the docket number (Docket No. OSHA–2012–0029) or the RIN number (RIN 1218–AC78) for this rulemaking. Because of security-related procedures, submission by regular mail may result in significant delay. Please contact the OSHA Docket Office for information about security procedures for making submissions by hand delivery, express delivery and messenger or courier service.

All comments, including any personal information you provide, are placed in the public docket without change and may be made available online at *http://www.regulations.gov.* Therefore, OSHA cautions you about submitting personal information such as social security numbers and birthdates.

Docket: To read or download submissions in response to this **Federal Register** notice, go to docket number OSHA–2012–0029, at *http://www.regulations.gov.* All submissions are listed in the *http://www.regulations.gov* index, however some information (e.g., copyrighted material) is not publicly available to read or download through that Web page. All submissions, including copyrighted material, are available for inspection and copying at the OSHA Docket Office.

Electronic copies of this **Federal Register** document are available at *http://www.regulations.gov.* This document as well as news releases and other relevant information, is available at OSHA's Web page at *http://www.osha.gov.* A copy of the documents referenced in this notice may be obtained from: Office of State Programs, Directorate of Cooperative and State Programs, Occupational Safety and Health Administration, Room N3700, 200 Constitution Avenue NW., Washington, DC 20210, (202) 693–2244, fax (202) 693–1671; Office of the Regional Administrator, Occupational Safety and Health Administration, San Francisco Federal Building, 90 7th Street, Suite 18–100, San Francisco, California 94103, (415) 625–2546, fax (415) 625–2526; and the Hawaii Department of Labor and Industrial Relations, HIOSH, 830 Punchbowl Street, Suite 425, Honolulu, Hawaii 96813, (808) 586–9100, fax (808) 586–9104. Other information about the Hawaii State Plan is posted on the state's Web site at *http://hawaii.gov/labor/hiosh.*

FOR FURTHER INFORMATION CONTACT:

For press inquiries: Francis Meilinger, OSHA Office of Communications, Room N–3647, U.S. Department of Labor, 200 Constitution Avenue NW., Washington, DC 20210; telephone (202) 693–1999; email: *meilinger.francis2@dol.gov.*

For general and technical information: Douglas J. Kalinowski, Director, OSHA Directorate of Cooperative and State Programs, Room N–3700, U.S. Department of Labor, 200 Constitution Avenue NW., Washington DC 20210; telephone: (202) 693–2200; email: *kalinowski.doug@dol.gov.*

SUPPLEMENTARY INFORMATION:

Background

Section 18 of the Occupational Safety and Health Act of 1970 (the Act, 29 U.S.C. 667) provides that states that desire to assume responsibility for the development and enforcement of occupational safety and health standards may do so by submitting, and obtaining federal approval of a state plan. Procedures for state plan approval are set forth in the regulations at 29 CFR part 1902. If the Assistant Secretary, applying the criteria set forth in section 18(c) of the Act and OSHA regulations, finds that the plan provides or will provide for state standards and enforcement that are ''at least as effective as'' federal standards and enforcement, initial approval is granted pursuant to section 18(b) of the Act (29 U.S.C. 667(b)). A state may commence operations under its plan after this determination is made, but the Assistant Secretary retains enforcement authority during the initial-approval period, as provided by section 18(e) of the Act, which states, ''[a]fter the Secretary approves a State plan submitted under subsection (b), he may, but shall not be required to, exercise his authority under sections 8, 9, 10, 13, and 17 with respect to comparable standards promulgated under section 6,'' for the specified period. The Hawaii State Plan received initial federal OSHA plan approval on December 28, 1973 (39 FR 1010). The Hawaii Occupational Safety and Health Division (HIOSH) of the Hawaii Department of Labor and Industrial Relations is designated as the state agency with responsibility for administering the state plan.

Hawaii proceeded to the next phase of federal plan approval in 1984, when the state plan received ''final approval'' under section 18(e) of the Act. Final approval under section 18(e) requires, among other things, a finding by the Assistant Secretary that the plan, in actual operation, provides worker protection ''at least as effective as'' that provided by federal OSHA. A final approval determination results in the relinquishment of federal concurrent enforcement authority in the state with respect to occupational safety and health issues covered by the plan, 29 U.S.C. 667(e). Hawaii was granted final approval effective April 30, 1984 (49 FR 19182).

Current Situation in Hawaii

During the past three years, the Hawaii State Plan has faced major budgetary and hiring restraints that have significantly affected its program. Impacts on the state plan are clearly reflected in the deficiencies identified throughout recent OSHA monitoring reports. Joint efforts were made by federal OSHA and Hawaii to address these issues, yet Hawaii continues to face severe programmatic, staffing and training issues. As of March 1, 2012, the HIOSH program employed five safety inspectors and five health inspectors, which falls short of the required nine (9) safety inspectors and nine (9) health inspectors as determined by benchmarks established pursuant to a federal court order entered in *AFL–CIO* v. *Marshall,* C.A. No. 74–406 (D.D.C. 1978)(order implementing *AFL–CIO* v. *Marshall,* 570 F.2d 1030 (D.C. Cir. 1978).) This reduced staffing level has resulted in a significant decrease in enforcement activities. Added to the state's economic situation is the loss of institutional knowledge with the recent retirement of the program administrator. With the ongoing task of training a new program administrator, as well as hiring and training new enforcement and administrative staff, Hawaii has requested assistance from federal OSHA. Hawaii's proactive efforts demonstrate a commitment to ensuring that workers are afforded adequate protection during this period of program strengthening and improvement.

Joint efforts by federal OSHA and HIOSH to address Hawaii's worker protection needs during this period, necessitate a greater enforcement presence by OSHA in the state. In order for federal OSHA to be able to provide

this assistance, Hawaii's plan approval status must be modified from final approval to initial approval. During the phase of initial state plan approval status, federal OSHA regains authority to enforce federal OSHA requirements as a supplement to state plan enforcement.

Dwight Takamine, Hawaii's Director of Labor and Industrial Relations, has committed the state to making Hawaii's workplaces safe and healthful and to working ''diligently toward restoring [the state's] 18(e) status as soon as possible.'' OSHA notes that the 3-year evaluation requirement for final approval following initial approval (see section 18(e), second sentence) does not apply in this instance. Hawaii received initial approval in 1974, and the structural features of the state plan remain completely intact.

Procedures for OSHA's Proposed Modification to Hawaii Plan Approval

Today's notice proposes a modification to the Hawaii State Plan's status from final approval to initial approval in order to allow for federal OSHA to provide inspection and enforcement assistance to Hawaii. OSHA intends to make this modification in keeping with procedures at 29 CFR 1902.47 et seq. Relevant materials, including all public comments, relevant federal monitoring reports, a copy of the federal court's order under which state staffing benchmarks are established, and other pertinent documentation will be publically available in OSHA's docket office, as well as through various federal OSHA and state offices as described above. At the close of the public comment period initiated today, OSHA will review all comments submitted; will review any hearing requests; and will schedule an informal hearing if required to resolve substantial issues raised in any such requests. The Assistant Secretary's final decision will thereafter be published in the **Federal Register** and will include the appropriate revisions to 29 CFR 1952 if the Hawaii State Plan's status is changed.

Effect of Modifying Hawaii's Status

As discussed above, modifying the Hawaii State Plan's status from final to initial approval would authorize OSHA to carry on an enforcement program to supplement that of HIOSH, including independent federal or joint state and federal inspections resulting in issuance of appropriate federal citations. However, modifying Hawaii's final approval status would not affect Hawaii's basic plan approval and would not affect Hawaii's legal authority to enforce state occupational safety and health standards in the state's workplaces. This modification would leave Hawaii's federally-approved state plan completely in place, and would simply reinstate federal OSHA's authority to supplement state enforcement during this difficult period.

Pending a final decision in the proceeding instituted today, OSHA will continue to exercise federal authority over safety and health issues excluded from coverage under the state plan; monitoring inspections including accompanied visits; and other federal authority not affected by the 1984 final approval decision.

Operational Status Agreement

OSHA regulations provide that in states with initially-approved plans, OSHA and the state may enter into an agreement describing the division of responsibilities between them (29 CFR 1954.3). OSHA and HIOSH are developing such an agreement, which in this case would also include a timetable for remedial action to make state operations ''as least as effective'' and to ensure state compliance with applicable personnel staffing benchmarks. Notice will be provided in the **Federal Register** of this agreement, which OSHA intends will be effective on the date of a final decision in the modification proceeding initiated today.

Authority and Signature

David Michaels, Ph.D., MPH, Assistant Secretary of Labor for Occupational Safety and Health, U.S. Department of Labor, 200 Constitution Ave. NW., Washington, DC, authorized the preparation of this notice. OSHA is issuing this notice under the authority specified by Section 6(d) of the Occupational Safety and Health Act of 1970 (29 U.S.C. 655), Secretary of Labor's Order No. 1–2012 (76 FR 3912), and 29 CFR part 1905.

Signed at Washington, DC, on July 11, 2012.

David Michaels,

Assistant Secretary of Labor for Occupational Safety and Health.

[FR Doc. 2012–17363 Filed 7–18–12; 8:45 am]

BILLING CODE 4510–26–P

DEPARTMENT OF HOMELAND SECURITY

Coast Guard

33 CFR Part 100

[Docket No. USCG–2012–0156]

RIN 1625—AA08

Special Local Regulations for Marine Events; Potomac River, National Harbor Access Channel, MD

AGENCY: Coast Guard, DHS.

ACTION: Proposed rule; withdrawal.

SUMMARY: The Coast Guard is withdrawing its proposed rule concerning amendments to the regattas and marine parades regulations. The rulemaking was initiated to establish special local regulations during the swim segment of the ''Ironman 70.3 National Harbor'' triathlon, a marine event to be held on the waters of the Potomac River in Prince George's County, Maryland on August 5, 2012. The Coast Guard was notified on May 22, 2012 that the event had been cancelled.

DATES: The proposed rule published April 6, 2012, at 77 FR 20750, is withdrawn as of July 19, 2012.

ADDRESSES: The docket for this withdrawn rulemaking is available for inspection or copying at the Docket Management Facility (M–30), U.S. Department of Transportation, West Building Ground Floor, Room W12–140, 1200 New Jersey Avenue SE., Washington, DC 20590, between 9 a.m. and 5 p.m., Monday through Friday, except Federal holidays. You may also find this docket on the Internet by going to *http://www.regulations.gov*, inserting USCG–2012–0156 in the ''Keyword'' box, and then clicking ''Search.''

FOR FURTHER INFORMATION CONTACT: If you have questions about this notice, call or email Mr. Ronald Houck, Waterways Management Division, Sector Baltimore, MD, U.S. Coast Guard; telephone 410–576–2674, email *Ronald.L.Houck@uscg.mil*. If you have questions on viewing material in the docket, call Renee V. Wright, Program Manager, Docket Operations, telephone 202–366–9826.

SUPPLEMENTARY INFORMATION:

Background

On April 6, 2012, we published a notice of proposed rulemaking entitled ''Special Local Regulations for Marine Events; Potomac River, National Harbor Access Channel, MD'' in the **Federal Register** (77 FR 20750). The rulemaking

concerned the Coast Guard's proposal to establish temporary special local regulations on specified waters of the Potomac River and National Harbor Access Channel, in Prince George's County, MD, effective from 5 a.m. until 11 a.m. on August 5, 2012. The regulated area included all waters of the Potomac River, National Harbor Access Channel, within an area from the shoreline and then west to a line connecting the following positions: from position latitude 38°47′28″ N, longitude 077°01′20″ W; thence southerly to position latitude 38°46′49″ N, longitude 077°01′28″ W. The regulations were needed to temporarily restrict vessel traffic during the event to provide for the safety of participants, spectators and other transiting vessels.

Withdrawal

The Coast Guard is withdrawing this rulemaking because the event has been cancelled.

Authority

We issue this notice of withdrawal under the authority of 33 U.S.C. 1233.

Dated: June 18, 2012.

Mark P. O'Malley,

Captain, U.S. Coast Guard, Captain of the Port Baltimore.

[FR Doc. 2012–17578 Filed 7–18–12; 8:45 am]

BILLING CODE 9110–04–P

DEPARTMENT OF HOMELAND SECURITY

Coast Guard

33 CFR Part 100

[Docket Number USCG–2012–0495]

RIN 1625–AA08

Special Local Regulations, Cruce a Nado Internacional, Ponce Harbor; Ponce, PR

AGENCY: Coast Guard, DHS.

ACTION: Notice of proposed rulemaking.

SUMMARY: The Coast Guard proposes to establish special local regulations on the waters of Ponce Harbor in Ponce, Puerto Rico during the Cruce a Nado Internacional, a swimming event. The event is scheduled to take place on Sunday, September 2, 2012. Approximately 85 swimmers are anticipated to participate in the swimming event, and there are not expected to be any spectator vessels present during the event. These special local regulations are necessary to provide for the safety of life on the navigable waters of the United States during the event. These special local regulations would establish a swim area, where all persons and vessels, except those persons participating in the race and vessels patrolling the swim area, will be prohibited from entering, transiting through, anchoring in, or remaining within unless authorized by the Captain of the Port San Juan or a designated representative.

DATES: Comments and related material must be received by the Coast Guard on or before August 20, 2012. Requests for public meetings must be received by the Coast Guard on or before August 3, 2012.

ADDRESSES: You may submit comments identified by docket number using any one of the following methods:

(1) *Federal eRulemaking Portal: http://www.regulations.gov.*

(2) *Fax:* 202–493–2251.

(3) *Mail or Delivery:* Docket Management Facility (M–30), U.S. Department of Transportation, West Building Ground Floor, Room W12–140, 1200 New Jersey Avenue SE., Washington, DC 20590–0001. Deliveries accepted between 9 a.m. and 5 p.m., Monday through Friday, except federal holidays. The telephone number is 202–366–9329.

See the ''Public Participation and Request for Comments'' portion of the **SUPPLEMENTARY INFORMATION** section below for further instructions on submitting comments. To avoid duplication, please use only one of these three methods.

FOR FURTHER INFORMATION CONTACT: If you have questions on this rule, call or email Mr. Robert Cerrato, Sector San Juan Prevention Department, Coast Guard; telephone (787) 289–2097, email *Robert.J.Cerrato@uscg.mil.* If you have questions on viewing or submitting material to the docket, call Renee V. Wright, Program Manager, Docket Operations, telephone (202) 366–9826.

SUPPLEMENTARY INFORMATION:

Table of Acronyms

DHS Department of Homeland Security
FR **Federal Register**
NPRM Notice of Proposed Rulemaking

A. Public Participation and Request for Comments

We encourage you to participate in this rulemaking by submitting comments and related materials. All comments received will be posted without change to *http://www.regulations.gov* and will include any personal information you have provided.

1. Submitting Comments

If you submit a comment, please include the docket number for this rulemaking, indicate the specific section of this document to which each comment applies, and provide a reason for each suggestion or recommendation. You may submit your comments and material online at *http://www.regulations.gov,* or by fax, mail, or hand delivery, but please use only one of these means. If you submit a comment online, it will be considered received by the Coast Guard when you successfully transmit the comment. If you fax, hand deliver, or mail your comment, it will be considered as having been received by the Coast Guard when it is received at the Docket Management Facility. We recommend that you include your name and a mailing address, an email address, or a telephone number in the body of your document so that we can contact you if we have questions regarding your submission.

To submit your comment online, go to *http://www.regulations.gov,* type the docket number USCG–2012–0495 in the ''SEARCH'' box and click ''SEARCH.'' Click on ''Submit a Comment'' on the line associated with this rulemaking.

If you submit your comments by mail or hand delivery, submit them in an unbound format, no larger than 8½ by 11 inches, suitable for copying and electronic filing. If you submit comments by mail and would like to know that they reached the Facility, please enclose a stamped, self-addressed postcard or envelope. We will consider all comments and material received during the comment period and may change the rule based on your comments.

2. Viewing Comments and Documents

To view comments, as well as documents mentioned in this preamble as being available in the docket, go to *http://www.regulations.gov,* type the docket number USCG–2012–0495 in the ''SEARCH'' box and click ''SEARCH.'' Click on Open Docket Folder on the line associated with this rulemaking. You may also visit the Docket Management Facility in Room W12–140 on the ground floor of the Department of Transportation West Building, 1200 New Jersey Avenue SE., Washington, DC 20590, between 9 a.m. and 5 p.m., Monday through Friday, except Federal holidays.

3. Privacy Act

Anyone can search the electronic form of comments received into any of our dockets by the name of the

individual submitting the comment (or signing the comment, if submitted on behalf of an association, business, labor union, etc.). You may review a Privacy Act notice regarding our public dockets in the January 17, 2008, issue of the **Federal Register** (73 FR 3316).

4. Public Meeting

We do not now plan to hold a public meeting. But you may submit a request for one on or before June 18, 2012 using one of the methods specified under **ADDRESSES**. Please explain why you believe a public meeting would be beneficial. If we determine that one would aid this rulemaking, we will hold one at a time and place announced by a later notice in the **Federal Register**.

B. Basis and Purpose

The legal basis for the rule is the Coast Guard's authority to establish special local regulations: 33 U.S.C. 1233. The purpose of the rule is to provide for the safety of life on navigable waters of the United States during the Cruce a Nado Internacional swimming event.

C. Discussion of Proposed Rule

On September 2, 2012, Club Cruce a Nado is sponsoring the Cruce a Nado Internacional, a swimming event. The event will be held on the waters of Ponce Harbor in Ponce, Puerto Rico. Approximately 85 swimmers are anticipated to participate in the event. No spectator vessels are anticipated to be present during the event.

The proposed rule would establish special local regulations that will encompass certain waters of Ponce Harbor in Ponce, Puerto Rico. The special local regulations will be enforced from 10 a.m. until 6 p.m. on September 2, 2012. The special local regulations will establish a swim area, where all persons and vessels, except those persons participating in the race and vessels patrolling the swim area, will be prohibited from entering, transiting through, anchoring in, or remaining within unless authorized by the Captain of the Port San Juan or a designated representative.

Persons and vessels may request authorization to enter, transit through, anchor in, or remain within the swim area by contacting the Captain of the Port San Juan by telephone at (787) 289–2041, or a designated representative via VHF radio on channel 16. If authorization to enter, transit through, anchor in, or remain within the swim area is granted by the Captain of the Port San Juan or a designated representative, all persons and vessels receiving such authorization must comply with the instructions of the Captain of the Port San Juan or a designated representative. The Coast Guard will provide notice of the special local regulations by Local Notice to Mariners, Broadcast Notice to Mariners, and on-scene designated representatives.

D. Regulatory Analyses

We developed this proposed rule after considering numerous statutes and executive orders related to rulemaking. Below we summarize our analyses based on a number of these statutes or executive orders.

1. Regulatory Planning and Review

This proposed rule is not a significant regulatory action under section 3(f) of Executive Order 12866, Regulatory Planning and Review, as supplemented by Executive Order 13563, Improving Regulation and Regulatory Review, and does not require an assessment of potential costs and benefits under section 6(a)(3) of Executive Order 12866 or under section 1 of Executive Order 13563. The Office of Management and Budget has not reviewed it under those Orders.

The economic impact of this rule is not significant for the following reasons: (1) The special local regulations will be enforced for only eight hours; (2) although persons and vessels will not be able to enter, transit through, anchor in, or remain within the swim area without authorization from the Captain of the Port San Juan or a designated representative, they may operate in the surrounding area during the enforcement period; (3) persons and vessels may still enter, transit through, anchor in, or remain within the swim area during the enforcement period if authorized by the Captain of the Port San Juan or a designated representative; and (4) the Coast Guard will provide advance notification of the special local regulations to the local maritime community by Local Notice to Mariners and Broadcast Notice to Mariners.

2. Impact on Small Entities

Under the Regulatory Flexibility Act (5 U.S.C. 601–612), we have considered the impact of this proposed rule on small entities. The Coast Guard certifies under 5 U.S.C. 605(b) that this proposed rule will not have a significant economic impact on a substantial number of small entities.

The Coast Guard certifies under 5 U.S.C. 605(b) that this rule will not have a significant economic impact on a substantial number of small entities. This rule may affect the following entities, some of which may be small entities: The owners or operators of vessels intending to enter, transit through, anchor in, or remain within that portion of Ponce Harbor encompassed within the special local regulations from 10 a.m. until 6 p.m. on September 2, 2012. For the reasons discussed in the Regulatory Planning and Review section above, this rule will not have a significant economic impact on a substantial number of small entities.

If you think that your business, organization, or governmental jurisdiction qualifies as a small entity and that this rule would have a significant economic impact on it, please submit a comment (see **ADDRESSES**) explaining why you think it qualifies and how and to what degree this rule would economically affect it.

3. Assistance for Small Entities

Under section 213(a) of the Small Business Regulatory Enforcement Fairness Act of 1996 (Pub. L. 104–121), we want to assist small entities in understanding this proposed rule. If the rule would affect your small business, organization, or governmental jurisdiction and you have questions concerning its provisions or options for compliance, please contact the person listed in the **FOR FURTHER INFORMATION CONTACT**, above. The Coast Guard will not retaliate against small entities that question or complain about this proposed rule or any policy or action of the Coast Guard.

4. Collection of Information

This proposed rule will not call for a new collection of information under the Paperwork Reduction Act of 1995 (44 U.S.C. 3501–3520.).

5. Federalism

A rule has implications for federalism under Executive Order 13132, Federalism, if it has a substantial direct effect on the States, on the relationship between the national government and the States, or on the distribution of power and responsibilities among the various levels of government. We have analyzed this proposed rule under that Order and determined that this rule does not have implications for federalism.

6. Protest Activities

The Coast Guard respects the First Amendment rights of protesters. Protesters are asked to contact the person listed in the **FOR FURTHER INFORMATION CONTACT** section to coordinate protest activities so that your message can be received without jeopardizing the safety or security of people, places or vessels.

7. Unfunded Mandates Reform Act

The Unfunded Mandates Reform Act of 1995 (2 U.S.C. 1531–1538) requires Federal agencies to assess the effects of their discretionary regulatory actions. In particular, the Act addresses actions that may result in the expenditure by a State, local, or tribal government, in the aggregate, or by the private sector of $100,000,000 (adjusted for inflation) or more in any one year. Though this proposed rule would not result in such an expenditure, we do discuss the effects of this rule elsewhere in this preamble.

8. Taking of Private Property

This proposed rule would not cause a taking of private property or otherwise have taking implications under Executive Order 12630, Governmental Actions and Interference with Constitutionally Protected Property Rights.

9. Civil Justice Reform

This proposed rule meets applicable standards in sections 3(a) and 3(b)(2) of Executive Order 12988, Civil Justice Reform, to minimize litigation, eliminate ambiguity, and reduce burden.

10. Protection of Children From Environmental Health Risks

We have analyzed this proposed rule under Executive Order 13045, Protection of Children from Environmental Health Risks and Safety Risks. This rule is not an economically significant rule and would not create an environmental risk to health or risk to safety that might disproportionately affect children.

11. Indian Tribal Governments

This proposed rule does not have tribal implications under Executive Order 13175, Consultation and Coordination with Indian Tribal Governments, because it would not have a substantial direct effect on one or more Indian tribes, on the relationship between the Federal Government and Indian tribes, or on the distribution of power and responsibilities between the Federal Government and Indian tribes.

12. Energy Effects

This proposed rule is not a ''significant energy action'' under Executive Order 13211, Actions Concerning Regulations That Significantly Affect Energy Supply, Distribution, or Use because it is not a ''significant regulatory action'' under Executive Order 12866 and is not likely to have a significant adverse effect on the supply, distribution, or use of energy. The Administrator of the Office of Information and Regulatory Affairs has not designated it as a significant energy action. Therefore, it does not require a Statement of Energy Effects under Executive Order 13211.

13. Technical Standards

This proposed rule does not use technical standards. Therefore, we did not consider the use of voluntary consensus standards.

14. Environment

We have analyzed this proposed rule under Department of Homeland Security Management Directive 023–01 and Commandant Instruction M16475.lD, which guide the Coast Guard in complying with the National Environmental Policy Act of 1969 (NEPA) (42 U.S.C. 4321–4370f), and have made a preliminary determination that this action is one of a category of actions that do not individually or cumulatively have a significant effect on the human environment. This proposed rule involves special local regulations issued in conjunction with a regatta or marine parade. This rule is categorically excluded from further review under paragraph 34(h) of Figure 2–1 of the Commandant Instruction. We seek any comments or information that may lead to the discovery of a significant environmental impact from this proposed rule.

List of Subjects in 33 CFR Part 100

Marine safety, Navigation (water), Reporting and recordkeeping requirements, Waterways.

For the reasons discussed in the preamble, the Coast Guard proposes to amend 33 CFR part 100 as follows:

PART 100—SAFETY OF LIFE ON NAVIGABLE WATERS

1. The authority citation for part 100 continues to read as follows:

Authority: 33 U.S.C. 1233.

2. Add a temporary § 100.35T07–0495 to read as follows:

§ 100.35T07–0495 Special Local Regulations, Cruce a Nado Internacional, Ponce Harbor; Ponce, Puerto Rico.

(a) *Regulated Area.* The following regulated area is established as a special local regulation. All coordinates are North American Datum 1983.

(1) *Swim Area.* All waters of Ponce Harbor encompassed within an imaginary line connecting the following points: starting at Point 1 in position 17°58.85 N, 66°37.48 W; thence southwest to Point 2 in position 17°57.50 N, 66°38.20 W; thence southeast to Point 3 in position 17°57.35 N, 66°37.95 W; thence northeast to point 4 in position 17°58.73 N, 66°37.25 W; thence northwest along the northeastern shoreline of Bahia de Ponce to the origin. All persons and vessels, except those persons participating in the race and vessels patrolling the swim area, are prohibited from entering, transiting through, anchoring in, or remaining within the swim area.

(b) *Definition.* The term ''designated representative'' means Coast Guard Patrol Commanders, including Coast Guard coxswains, petty officers, and other officers operating Coast Guard vessels, and Federal, state, and local officers designated by or assisting the Captain of the Port San Juan in the enforcement of the regulated areas.

(c) *Regulations.*

(1) Persons and vessels may request authorization to enter, transit through, anchor in, or remain within the regulated areas by contacting the Captain of the Port San Juan by telephone at 787–289–2041, or a designated representative via VHF radio on channel 16. If authorization is granted by the Captain of the Port San Juan or a designated representative, all persons and vessels receiving such authorization must comply with the instructions of the Captain of the Port San Juan or a designated representative.

(2) The Coast Guard will provide notice of the regulated areas by Local Notice to Mariners, Broadcast Notice to Mariners, and on-scene designated representatives.

(d) *Enforcement Date.* This rule will be enforced from 10 a.m. until 6 p.m. on September 2, 2012.

Dated: June 7, 2012.

D.W. Pearson,

Captain, U.S. Coast Guard, Captain of the Port San Juan.

[FR Doc. 2012–17562 Filed 7–18–12; 8:45 am]

BILLING CODE 9110–04–P

DEPARTMENT OF HOMELAND SECURITY

Coast Guard

33 CFR Part 100

[Docket Number USCG–2012–0503]

RIN 1625–AA08

Special Local Regulations; Fajardo Offshore Festival II, Fajardo, PR

AGENCY: Coast Guard, DHS.

ACTION: Notice of proposed rulemaking.

SUMMARY: The Coast Guard is establishing special local regulations on

the waters of Rada Fajardo in Fajardo, Puerto Rico during the Fajardo Offshore Festival II, a series of high-speed boat races. The event is scheduled to take place on Sunday, September 16, 2012. Approximately 30 high-speed power boats will be participating in the races. It is anticipated that approximately 20 spectator vessels will be present during the races. These special local regulations are necessary for the safety of race participants, participant vessels, spectators, and the general public on the navigable waters of the United States during the event. The special local regulations establish the following three areas: a race area, where all persons and vessels, except those persons and vessels participating in the high-speed boat races, are prohibited from entering, transiting through, anchoring in, or remaining within; a buffer zone around the race area, where all persons and vessels, except those persons and vessels enforcing the buffer zone, are prohibited from entering, transiting through, anchoring in, or remaining within; and a spectator area, where all vessels are prohibited from anchoring unless authorized by the Captain of the Port San Juan or a designated representative.

DATES: Comments and related material must be received by the Coast Guard on or before August 20, 2012.

ADDRESSES: You may submit comments identified by docket number using any one of the following methods:

(1) *Federal eRulemaking Portal: http://www.regulations.gov.*

(2) *Fax:* 202–493–2251.

(3) *Mail or Delivery:* Docket Management Facility (M–30), U.S. Department of Transportation, West Building Ground Floor, Room W12–140, 1200 New Jersey Avenue SE., Washington, DC 20590–0001. Deliveries accepted between 9 a.m. and 5 p.m., Monday through Friday, except Federal holidays. The telephone number is 202–366–9329.

See the ''Public Participation and Request for Comments'' portion of the **SUPPLEMENTARY INFORMATION** section below for further instructions on submitting comments. To avoid duplication, please use only one of these three methods.

FOR FURTHER INFORMATION CONTACT: If you have questions on this rule, call or email Mr. Robert Cerrato, Sector San Juan Prevention Department, Coast Guard; telephone (787) 289–2097, email *Robert.J.Cerrato@uscg.mil.* If you have questions on viewing or submitting material to the docket, call Renee V. Wright, Program Manager, Docket Operations, telephone (202) 366–9826.

SUPPLEMENTARY INFORMATION:

Table of Acronyms

DHS Department of Homeland Security
FR **Federal Register**
NPRM Notice of Proposed Rulemaking

A. Public Participation and Request for Comments

We encourage you to participate in this rulemaking by submitting comments and related materials. All comments received will be posted without change to *http://www.regulations.gov* and will include any personal information you have provided.

1. Submitting Comments

If you submit a comment, please include the docket number for this rulemaking, indicate the specific section of this document to which each comment applies, and provide a reason for each suggestion or recommendation. You may submit your comments and material online at *http://www.regulations.gov*, or by fax, mail, or hand delivery, but please use only one of these means. If you submit a comment online, it will be considered received by the Coast Guard when you successfully transmit the comment. If you fax, hand deliver, or mail your comment, it will be considered as having been received by the Coast Guard when it is received at the Docket Management Facility. We recommend that you include your name and a mailing address, an email address, or a telephone number in the body of your document so that we can contact you if we have questions regarding your submission.

To submit your comment online, go to *http://www.regulations.gov*, type the docket number USCG–2012–0503 in the ''SEARCH'' box and click ''SEARCH.'' Click on ''Submit a Comment'' on the line associated with this rulemaking.

If you submit your comments by mail or hand delivery, submit them in an unbound format, no larger than 8½ by 11 inches, suitable for copying and electronic filing. If you submit comments by mail and would like to know that they reached the Facility, please enclose a stamped, self-addressed postcard or envelope. We will consider all comments and material received during the comment period and may change the rule based on your comments.

2. Viewing Comments and Documents

To view comments, as well as documents mentioned in this preamble as being available in the docket, go to *http://www.regulations.gov*, type the docket number USCG–2012–0503 in the ''SEARCH'' box and click ''SEARCH.'' Click on Open Docket Folder on the line associated with this rulemaking. You may also visit the Docket Management Facility in Room W12–140 on the ground floor of the Department of Transportation West Building, 1200 New Jersey Avenue SE., Washington, DC 20590, between 9 a.m. and 5 p.m., Monday through Friday, except Federal holidays.

3. Privacy Act

Anyone can search the electronic form of comments received into any of our dockets by the name of the individual submitting the comment (or signing the comment, if submitted on behalf of an association, business, labor union, etc.). You may review a Privacy Act notice regarding our public dockets in the January 17, 2008, issue of the **Federal Register** (73 FR 3316).

4. Public Meeting

We do not now plan to hold a public meeting. But you may submit a request for one on or before August 9, 2012, using one of the methods specified under **ADDRESSES**. Please explain why you believe a public meeting would be beneficial. If we determine that one would aid this rulemaking, we will hold one at a time and place announced by a later notice in the **Federal Register**.

B. Basis and Purpose

The legal basis for the rule is the Coast Guard's authority to establish special local regulations: 33 U.S.C. 1233. The purpose of the rule is to insure safety of life on navigable waters of the United States during the Fajardo Offshore Festival II.

C. Discussion of Proposed Rule

On September 16, 2012, Puerto Rico Offshore Series, Inc. is sponsoring the Fajardo Offshore Festival II, a series of high-speed boat races. The races will be held on the waters of Rada Fajardo in Fajardo, Puerto Rico. Approximately 30 high-speed power boats will be participating in the races. It is anticipated that approximately 20 spectator vessels will be present during the races.

The special local regulations encompass certain waters of Rada Fajardo in Fajardo, Puerto Rico. The special local regulations will be enforced from 1 p.m. until 3 p.m. on September 16, 2012. The special local regulations consist of the following three areas: (1) A race area, where all persons and vessels, except those persons and vessels participating in the

high-speed boat races, are prohibited from entering, transiting through, anchoring in, or remaining within; (2) a buffer zone around the race area, where all persons and vessels, except those persons and vessels enforcing the buffer zone, are prohibited from entering, transiting through, anchoring in, or remaining within; and (3) a spectator area, where all vessels are prohibited from anchoring unless authorized by the Captain of the Port San Juan or a designated representative.

Persons and vessels may request authorization to enter, transit through, anchor in, or remain within the race area, buffer zone, or spectator area by contacting the Captain of the Port San Juan by telephone at (787) 289–2041, or a designated representative via VHF radio on channel 16. If authorization to enter, transit through, anchor in, or remain within the race area, buffer zone, or spectator area is granted by the Captain of the Port San Juan or a designated representative, all persons and vessels receiving such authorization must comply with the instructions of the Captain of the Port San Juan or a designated representative. The Coast Guard will provide notice of the special local regulations by Local Notice to Mariners, Broadcast Notice to Mariners, and on-scene designated representatives.

D. Regulatory Analyses

We developed this proposed rule after considering numerous statutes and executive orders related to rulemaking. Below we summarize our analyses based on a number of these statutes or executive orders.

1. Regulatory Planning and Review

This proposed rule is not a significant regulatory action under section 3(f) of Executive Order 12866, Regulatory Planning and Review, as supplemented by Executive Order 13563, Improving Regulation and Regulatory Review, and does not require an assessment of potential costs and benefits under section 6(a)(3) of Executive Order 12866 or under section 1 of Executive Order 13563. The Office of Management and Budget has not reviewed it under those Orders.

The economic impact of this rule is not significant for the following reasons: (1) The special local regulations will be enforced for only two hours; (2) although persons and vessels will not be able to enter, transit through, anchor in, or remain within the race area and buffer zone, or anchor in the spectator area, without authorization from the Captain of the Port San Juan or a designated representative, they may operate in the surrounding area during the enforcement period; (3) persons and vessels may still enter, transit through, anchor in, or remain within the race area and buffer zone, or anchor in the spectator area, during the enforcement period if authorized by the Captain of the Port San Juan or a designated representative; and (4) the Coast Guard will provide advance notification of the special local regulations to the local maritime community by Local Notice to Mariners and Broadcast Notice to Mariners.

2. Impact on Small Entities

Under the Regulatory Flexibility Act (5 U.S.C. 601–612), we have considered the impact of this proposed rule on small entities. The Coast Guard certifies under 5 U.S.C. 605(b) that this proposed rule will not have a significant economic impact on a substantial number of small entities.

The Coast Guard certifies under 5 U.S.C. 605(b) that this rule will not have a significant economic impact on a substantial number of small entities. This rule may affect the following entities, some of which may be small entities: The owners or operators of vessels intending to enter, transit through, anchor in, or remain within that portion of Rada Fajardo encompassed within the special local regulations from 1 p.m. until 3 p.m. on September 16, 2012. For the reasons discussed in the Regulatory Planning and Review section above, this rule will not have a significant economic impact on a substantial number of small entities.

If you think that your business, organization, or governmental jurisdiction qualifies as a small entity and that this rule would have a significant economic impact on it, please submit a comment (see **ADDRESSES**) explaining why you think it qualifies and how and to what degree this rule would economically affect it.

3. Assistance for Small Entities

Under section 213(a) of the Small Business Regulatory Enforcement Fairness Act of 1996 (Pub. L. 104–121), we want to assist small entities in understanding this proposed rule. If the rule would affect your small business, organization, or governmental jurisdiction and you have questions concerning its provisions or options for compliance, please contact the person listed in the **FOR FURTHER INFORMATION CONTACT**, above. The Coast Guard will not retaliate against small entities that question or complain about this proposed rule or any policy or action of the Coast Guard.

4. Collection of Information

This proposed rule will not call for a new collection of information under the Paperwork Reduction Act of 1995 (44 U.S.C. 3501–3520.).

5. Federalism

A rule has implications for federalism under Executive Order 13132, Federalism, if it has a substantial direct effect on the States, on the relationship between the national government and the States, or on the distribution of power and responsibilities among the various levels of government. We have analyzed this proposed rule under that Order and determined that this rule does not have implications for federalism.

6. Protest Activities

The Coast Guard respects the First Amendment rights of protesters. Protesters are asked to contact the person listed in the **FOR FURTHER INFORMATION CONTACT** section to coordinate protest activities so that your message can be received without jeopardizing the safety or security of people, places or vessels.

7. Unfunded Mandates Reform Act

The Unfunded Mandates Reform Act of 1995 (2 U.S.C. 1531–1538) requires Federal agencies to assess the effects of their discretionary regulatory actions. In particular, the Act addresses actions that may result in the expenditure by a State, local, or tribal government, in the aggregate, or by the private sector of $100,000,000 (adjusted for inflation) or more in any one year. Though this proposed rule would not result in such an expenditure, we do discuss the effects of this rule elsewhere in this preamble.

8. Taking of Private Property

This proposed rule would not cause a taking of private property or otherwise have taking implications under Executive Order 12630, Governmental Actions and Interference with Constitutionally Protected Property Rights.

9. Civil Justice Reform

This proposed rule meets applicable standards in sections 3(a) and 3(b)(2) of Executive Order 12988, Civil Justice Reform, to minimize litigation, eliminate ambiguity, and reduce burden.

10. Protection of Children From Environmental Health Risks

We have analyzed this proposed rule under Executive Order 13045, Protection of Children from

Environmental Health Risks and Safety Risks. This rule is not an economically significant rule and would not create an environmental risk to health or risk to safety that might disproportionately affect children.

11. Indian Tribal Governments

This proposed rule does not have tribal implications under Executive Order 13175, Consultation and Coordination with Indian Tribal Governments, because it would not have a substantial direct effect on one or more Indian tribes, on the relationship between the Federal Government and Indian tribes, or on the distribution of power and responsibilities between the Federal Government and Indian tribes.

12. Energy Effects

This proposed rule is not a ''significant energy action'' under Executive Order 13211, Actions Concerning Regulations That Significantly Affect Energy Supply, Distribution, or Use because it is not a ''significant regulatory action'' under Executive Order 12866 and is not likely to have a significant adverse effect on the supply, distribution, or use of energy. The Administrator of the Office of Information and Regulatory Affairs has not designated it as a significant energy action. Therefore, it does not require a Statement of Energy Effects under Executive Order 13211.

13. Technical Standards

This proposed rule does not use technical standards. Therefore, we did not consider the use of voluntary consensus standards.

14. Environment

We have analyzed this proposed rule under Department of Homeland Security Management Directive 023–01 and Commandant Instruction M16475.lD, which guide the Coast Guard in complying with the National Environmental Policy Act of 1969 (NEPA) (42 U.S.C. 4321–4370f), and have made a preliminary determination that this action is one of a category of actions that do not individually or cumulatively have a significant effect on the human environment. This proposed rule involves special local regulations issued in conjunction with a regatta or marine parade. This rule is categorically excluded from further review under paragraph 34(h) of Figure 2–1 of the Commandant Instruction. We seek any comments or information that may lead to the discovery of a significant environmental impact from this proposed rule.

List of Subjects in 33 CFR Part 100

Marine safety, Navigation (water), Reporting and recordkeeping requirements, Waterways.

For the reasons discussed in the preamble, the Coast Guard proposes to amend 33 CFR part 100 as follows:

PART 100—SAFETY OF LIFE ON NAVIGABLE WATERS

1. The authority citation for part 100 continues to read as follows:

Authority: 33 U.S.C. 1233.

2. Add a temporary § 100.35T07–0503 to read as follows:

§ 100.35T07–0503 Special Local Regulations; Fajardo Offshore Festival II, Rada Fajardo, Fajardo, Puerto Rico.

(a) *Regulated Areas.* The following regulated areas are established as special local regulations. All coordinates are North American Datum 1983.

(1) *Race Area.* All waters of Rada Fajardo encompassed within an imaginary line connecting the following points: starting at Point 1 in position 18°21.357 N, 65°37.203 W; thence southeast to Point 2 in position 18°21.334 N, 65°37.112 W; thence northeast to Point 3 in position 18°22.365 N, 65°36.585 W; thence northwest to point 4 in position 18°22.365 N, 65°36.585 W; thence southwest to point 5 in position 18°21.733 N, 65°37.112 W; thence south back to origin. All persons and vessels, except those persons and vessels participating in the high-speed boat race, are prohibited from entering, transiting through, anchoring in, or remaining within the race area.

(2) *Buffer Zone.* All waters of Rada Fajardo encompassed within an imaginary line connecting the following points: starting at Point 1 in position 18°22.492 N, 65°36.515 W; thence northeast to Point 2 in position 18°22.423 N, 65°36.355 W; thence southeast to Point 3 in position 18°21.297 N, 65°37.110 W; thence southwest to point 4 in position 18°21.369 N, 65°37.264 W; thence northwest to point 5 in position 18°21.728 N, 65°37.220 W; thence north back to origin. All persons and vessels except those persons and vessels enforcing the buffer zone are prohibited from entering, transiting through, anchoring in, or remaining within the buffer zone.

(3) *Spectator Area.* All waters of Rada Fajardo excluding the race areas and buffer zone, encompassed within an imaginary line connecting the following points: starting at Point 1 in position 18°22.540 N, 65°36.421 W; thence southeast to Point 2 in position 18°22.331 N, 65°36.205 W; thence southwest to Point 3 in position 18°21.199 N, 65°36.995 W; thence west to Point 4 in position 18°21.205 N, 65°37.243 W. All vessels are prohibited from anchoring in the spectator area. On-scene designated representatives will direct spectator vessels to the spectator area.

(b) *Definition.* The term ''designated representative'' means Coast Guard Patrol Commanders, including Coast Guard coxswains, petty officers, and other officers operating Coast Guard vessels, and Federal, state, and local officers designated by or assisting the Captain of the Port San Juan in the enforcement of the regulated areas.

(c) *Regulations.* (1) Persons and vessels may request authorization to enter, transit through, anchor in, or remain within the regulated areas by contacting the Captain of the Port San Juan by telephone at (787) 289–2041, or a designated representative via VHF radio on channel 16. If authorization is granted by the Captain of the Port San Juan or a designated representative, all persons and vessels receiving such authorization must comply with the instructions of the Captain of the Port San Juan or a designated representative.

(2) The Coast Guard will provide notice of the regulated areas by Local Notice to Mariners, Broadcast Notice to Mariners, and on-scene designated representatives.

Dated: June 13, 2012.

D.W. Pearson,

Captain, U.S. Coast Guard. Captain of the Port San Juan.

[FR Doc. 2012–17581 Filed 7–18–12; 8:45 am]

BILLING CODE 9110–04–P

ENVIRONMENTAL PROTECTION AGENCY

40 CFR Part 52

[EPA–R01–OAR–2012–0229; A–1–FRL–9700–5]

Approval and Promulgation of Air Quality Implementation Plans; New Hampshire; Determination of Attainment of the One-Hour Ozone Standard for the Portsmouth-Dover-Rochester and Manchester Areas

AGENCY: Environmental Protection Agency (EPA).

ACTION: Proposed rule.

SUMMARY: The EPA is proposing to make four separate and independent determinations for two areas in New Hampshire. First, with respect to the

Portsmouth-Dover-Rochester, (Portsmouth) serious one-hour ozone nonattainment area, EPA is proposing to determine that the area attained the one-hour National Ambient Air Quality Standard (NAAQS) for ozone, by the applicable deadline of November 15, 1999. Second, EPA is proposing to determine that the Portsmouth area attained the one-hour ozone standard in 1999, and continues to attain the standard. Third, EPA is proposing to determine that the Manchester marginal one-hour ozone nonattainment area attained the one-hour NAAQS, by the applicable deadline of November 15, 1993. Fourth, EPA is proposing to determine, that the Manchester area has attained the one-hour ozone standard since 1993, and continues to attain the standard.

DATES: Written comments must be received on or before August 20, 2012.

ADDRESSES: Submit your comments, identified by Docket ID Number EPA–R01–OAR–2012– 0229 by one of the following methods:

1. *www.regulations.gov:* Follow the on-line instructions for submitting comments.
2. *Email: arnold.anne@epa.gov.*
3. *Fax:* (617) 918–0047.
4. *Mail:* ''Docket Identification Number EPA–R01–OAR–2012–0229, '' Anne Arnold, U.S. Environmental Protection Agency, EPA New England Regional Office, 5 Post Office Square, Suite 100 (mail code: OEP05–2), Boston, MA 02109–3912.
5. *Hand Delivery or Courier.* Deliver your comments to: Anne Arnold, Manager, Air Quality Planning Unit, Office of Ecosystem Protection, U.S. Environmental Protection Agency, EPA New England Regional Office, 5 Post Office Square, Suite 100, Boston, MA 02109–3912. Such deliveries are only accepted during the Regional Office's normal hours of operation. The Regional Office's official hours of business are Monday through Friday, 8:30 to 4:30, excluding legal holidays.

Instructions: Direct your comments to Docket ID No. EPA–R01–OAR–2012-0229. EPA's policy is that all comments received will be included in the public docket without change and may be made available online at *www.regulations.gov,* including any personal information provided, unless the comment includes information claimed to be Confidential Business Information (CBI) or other information whose disclosure is restricted by statute. Do not submit through *www.regulations.gov*, or email, information that you consider to be CBI or otherwise protected. The *www.regulations.gov* Web site is an ''anonymous access'' system, which means EPA will not know your identity or contact information unless you provide it in the body of your comment. If you send an email comment directly to EPA without going through *www.regulations.gov* your email address will be automatically captured and included as part of the comment that is placed in the public docket and made available on the Internet. If you submit an electronic comment, EPA recommends that you include your name and other contact information in the body of your comment and with any disk or CD–ROM you submit. If EPA cannot read your comment due to technical difficulties and cannot contact you for clarification, EPA may not be able to consider your comment. Electronic files should avoid the use of special characters, any form of encryption, and be free of any defects or viruses.

Docket: All documents in the electronic docket are listed in the *www.regulations.gov* index. Although listed in the index, some information is not publicly available, i.e., CBI or other information whose disclosure is restricted by statute. Certain other material, such as copyrighted material, is not placed on the Internet and will be publicly available only in hard copy form. Publicly available docket materials are available either electronically in *www.regulations.gov* or in hard copy at Office of Ecosystem Protection, U.S. Environmental Protection Agency, EPA New England Regional Office, 5 Post Office Square, Suite 100, Boston, MA. EPA requests that if at all possible, you contact the person listed in the **FOR FURTHER INFORMATION CONTACT** section to schedule your inspection. The Regional Office's official hours of business are Monday through Friday, 8:30 to 4:30, excluding legal holidays.

FOR FURTHER INFORMATION CONTACT: Richard P. Burkhart, Air Quality Planning Unit, U.S. Environmental Protection Agency, EPA New England Regional Office, 5 Post Office Square, Suite 100, Boston, MA 02109–3912, telephone number (617) 918–1664, fax number (617) 918–0664, email *Burkhart.Richard@epa.gov.*

SUPPLEMENTARY INFORMATION: Throughout this document whenever ''we,'' ''us,'' or ''our'' is used, we mean EPA.

The following outline is provided to aid in locating information in this preamble:

I. What is EPA proposing?
II. What is the background for these proposed actions?
III. What is EPA's analysis of data for purposes of determining attainment of the one-hour ozone standard?
A. How does EPA compute whether an area meets the one-hour ozone standard?
B. EPA's Analysis of the One-Hour Ozone Data for the Portsmouth, NH Serious One-Hour Ozone Nonattainment Area
C. EPA's Analysis of the One-Hour Ozone Data for the Manchester, NH Marginal One-Hour Ozone Nonattainment Area
IV. What is the effect of the proposed determinations?
V. Proposed Determinations
VI. Statutory and Executive Order Reviews

I. What is EPA proposing?

EPA is proposing to determine that the Portsmouth, NH serious one-hour ozone nonattainment area attained the one-hour ozone NAAQS by the deadline of November 15, 1999. This proposed determination is based upon complete, quality-assured and certified air quality monitoring data for the 1997–1999 ozone seasons showing that the area had an expected ozone exceedance rate below the level of the now revoked one-hour ozone NAAQS during that period and therefore attained the standard by its applicable deadline. EPA is also proposing to determine that the Portsmouth, NH area is currently attaining the standard based on complete, certified and quality-assured ozone monitoring data since 1999 and continues to attain the standard based on the most recent three years of complete, quality-assured and certified ozone monitoring data (2009–2011). If EPA finalizes its determination, that the area is currently attaining the one-hour standard, in accordance with EPA's interpretation under the Clean Data Policy, it will relieve the area of the obligation to submit one-hour ozone contingency measures for failure to attain.

In addition, EPA is proposing to determine that the Manchester, NH marginal one-hour ozone nonattainment area attained the one-hour ozone NAAQS by the applicable deadline of November 15, 1993. This proposed determination is based upon complete, certified, quality-assured ambient air quality monitoring data for the 1991–1993 ozone seasons showing that the area had an expected ozone exceedance rate below the level of the now revoked one-hour ozone NAAQS during that period, and that the area attained the standard by its applicable deadline. EPA is also proposing to determine that the Manchester, NH area has attained the one-hour ozone standard since 1993, and continues to attain the standard based on the most recent three years of

complete, quality-assured and certified ozone monitoring data (2009–2011).

II. What is the background for these proposed actions?

EPA designated the Portsmouth, NH serious one-hour ozone nonattainment area as nonattainment for the one-hour ozone standard following the enactment of the Clean Air Act (CAA) Amendments of 1990. Most areas of the country that EPA designated nonattainment for the one-hour ozone NAAQS were classified by operation of law as marginal, moderate, serious, severe, or extreme, depending on the severity of the area's air quality problem. (See CAA sections 107(d)(1)(C) and 181(a).) The Portsmouth, NH one-hour ozone nonattainment area was classified as serious. The one-hour ozone attainment deadline for the area was November 15, 1999. The Portsmouth, NH area has both an approved 15 Percent Reasonable Further Progress (RFP) plan and a Post-96 RFP plan. (See 63 FR 67405, December 7, 1998; and 67 FR 18493, April 16, 2002.) The area does not have an approved one-hour attainment demonstration, or one-hour contingency measures, but if EPA finalizes its proposed one-hour determinations, there would be no requirement for the Portsmouth, NH area to submit or implement one-hour ozone contingency measures for failure to attain the standard or for the Portsmouth, NH area to submit or implement a one-hour attainment demonstration.

In addition, EPA designated the Manchester, NH one-hour ozone nonattainment area as marginal for the one-hour ozone standard. The one-hour ozone attainment deadline for this area was November 15, 1993. Marginal areas had very few CAA requirements. For example one-hour ozone marginal areas did not have to prepare or submit attainment demonstrations, RFP or contingency measures. Table 1 lists the cities and towns in the Portsmouth and Manchester, NH one-hour ozone nonattainment areas. (See also 40 CFR 81.330.)

TABLE 1—LIST OF CITIES AND TOWNS FOR THE PORTSMOUTH AND MANCHESTER, NH AREAS

Area	County	Cities and towns included	Classification
Manchester, NH Area	Merrimack (all)	Allenstown, Andover, Boscawen, Bow, Bradford, Canterbury, Chichester, Concord, Danbury, Dunbarton, Epsom, Franklin, Henniker, Hill, Hooksett, Hopkinton, Loudon, New London, Newbury, Northfield, Pembroke, Pittsfield, Salisbury, Sutton, Warner, Webster, Wilmot.	Marginal.
	Hillsborough (part)	Antrim, Bedford, Bennington, Deering, Francestown, Goffstown, Greenfield, Greenville, Hancock, Hillsborough, Lyndeborough, Manchester, Mason, New Boston, New Ipswich, Petersborough, Sharon, Temple, Weare, Windsor.	Marginal.
	Rockingham (part)	Auburn, Candia, Chester, Deerfield, Epping, Fremont, Northwood, Nottingham, Raymond.	Marginal.
Portsmouth, NH Area	Rockingham (part)	Exeter, Greenland, Hampton, New Castle, Newfields, Newington, Newmarket, North Hampton, Portsmouth, Rye, Stratham.	Serious.
	Strafford (all)	Barrington, Dover, Durham, Farmington, Lee, Madbury, Middleton, Milton, New Durham, Rochester, Rollinsford, Somersworth, Strafford.	Serious.

On July 18, 1997 (62 FR 38856), EPA promulgated for the first time a new standard for ozone based on an 8-hour average concentration (the ''1997 8-hour ozone NAAQS''). EPA designated and classified most areas of the country under the eight-hour ozone NAAQS in an April 30, 2004 final rule (69 FR 23858). EPA designated Southern New Hampshire as nonattainment for the 1997 8-hour ozone NAAQS. This area is known as the Boston-Manchester-Portsmouth (SE), NH area. At the time of eight-hour designations, the Boston-Manchester-Portsmouth (SE), NH area did not meet the one-hour ozone standard. The Boston-Manchester-Portsmouth (SE), NH area is composed of portions of three separate one-hour ozone nonattainment areas: (1) The Portsmouth, NH serious one-hour ozone nonattainment area; (2) the Boston-Lawrence-Worcester, MA-NH one-hour ozone nonattainment area; and (3) the Manchester, NH marginal one-hour ozone nonattainment area. This proposed action concerns the Portsmouth, NH serious one-hour ozone nonattainment area, and the Manchester, NH marginal one-hour ozone nonattainment area. The Boston-Lawrence-Worcester, MA-NH one-hour ozone nonattainment area, was the subject of a previous **Federal Register** notice that determined the Boston-Lawrence-Worcester, MA-NH one-hour ozone nonattainment area attained the one-hour NAAQS by its attainment date (see 77 FR 31496, May 29, 2012).

On April 30, 2004, EPA issued a final rule (69 FR 23951) entitled ''Final Rule To Implement the 8-Hour Ozone National Ambient Air Quality Standard—Phase 1,'' referred to as the Phase 1 Rule. Among other matters, this rule revoked the one-hour ozone NAAQS in most areas of the country, effective June 15, 2005. (See 40 CFR 50.9(b); 69 FR at 23996; and 70 FR 44470, August 3, 2005.) The Phase 1 Rule also set forth how anti-backsliding principles will ensure continued progress toward attainment of the eight-hour ozone NAAQS by identifying which one-hour requirements remain applicable in an area after revocation of the one-hour ozone NAAQS. Although EPA revoked the one-hour ozone standard (effective June 15, 2005), eight-hour ozone nonattainment areas remain subject to certain one-hour anti-backsliding requirements based on their one-hour ozone classification.[1] The United States Court of Appeals for the District of Columbia Circuit subsequently determined that EPA should have retained certain additional measures as one-hour ozone anti-backsliding requirements. These include one-hour ozone contingency measures under section 172(c)(9), which are to be implemented in the event an area fails to attain by its one-hour ozone attainment date. South Coast Air Quality Management District v. EPA,

[1] Final Rule to Implement the 8-Hour Ozone National Ambient Air Quality Standard—Phase 1, 69 FR 23951, April 30, 2004.

472 F.3d 882 (D.C. Cir. 2006) rehearing denied 489 F.3d 1245. EPA has since added one-hour ozone contingency measures as an applicable requirement in 40 CFR 51.900(o). (See 77 FR 28424, May 14, 2012).

EPA is proposing two separate and independent determinations for the Portsmouth, NH serious one-hour ozone nonattainment area. First, EPA is proposing to determine that the area attained the one-hour ozone standard by its attainment deadline, the end of the 1999 ozone season, and second, that the area continues to attain that NAAQS. If EPA finalizes its proposed determinations, there would be no requirement for the Portsmouth, NH area to submit or implement one-hour ozone contingency measures for failure to attain that standard.

In addition, EPA is proposing to determine that the Manchester, NH marginal one-hour ozone nonattainment area attained the one-hour ozone standard by its attainment date, the end of the 1993 ozone season, and that the area continues to attain that NAAQS. Since the Manchester, NH area is a marginal nonattainment area for the one-hour ozone standard, the area has no CAA-required contingency measures for failure to attain the one-hour NAAQS.

III. What is EPA's analysis of data for purposes of determining attainment of the one-hour ozone standard?

A. How does EPA compute whether an area has attained the one-hour ozone standard?

Although the one-hour ozone NAAQS as promulgated in 40 CFR 50.9 includes no discussion of specific data handling conventions, EPA's publicly articulated position and the approach long since universally adopted by the air quality management community is that the interpretation of the one-hour ozone standard requires rounding ambient air quality data consistent with the stated level of the standard, which is 0.12 parts per million (ppm). 40 CFR 50.9(a) states that: ''The level of the national one-hour primary and secondary ambient air quality standards for ozone * * * is 0.12 parts per million. * * * The standard is attained when the expected number of days per calendar year with maximum hourly average concentrations of 0.12 parts per million * * * is equal to or less than 1, as determined by appendix H to this part.'' Thus, compliance with the NAAQS is based on comparison of air quality concentrations with the standard and on the number of days that standard has been exceeded, adjusted for the number of missing days.

For comparison with the NAAQS, EPA has communicated the data handling conventions for the one-hour ozone NAAQS in guidance documents. As early as 1979, EPA issued guidance stating that the level of our NAAQS dictates the number of significant figures to be used in determining whether the standard was exceeded. The stated level of the standard is taken as defining the number of significant figures to be used in comparisons with the standard. For example, a standard level of 0.12 ppm means that measurements are to be rounded to two decimal places (0.005 rounds up), and, therefore, 0.125 ppm is the smallest concentration value in excess of the level of the standard. (See, ''Guideline for the Interpretation of Ozone Air Quality Standards,'' EPA–450/4–79–003, OAQPS No. 1.2–108, January 1979.) EPA has consistently applied the rounding convention in this 1979 guideline. See, 68 FR 19111, April 17, 2003; 68 FR 62043, October 31, 2003; and 69 FR 21719, April 22, 2004. Then, EPA determines attainment status under the one-hour ozone NAAQS on the basis of the annual average number of expected exceedances of the NAAQS over a three-year period. (See, 60 FR 3349, January 17, 1995 and ''General Preamble for the Implementation of Title I of the Clean Air Act Amendments of 1990,'' at 57 FR 13506, April 16, 1992 (''General Preamble'').) EPA's determination is based upon data that have been collected and quality-assured in accordance with 40 CFR part 58, and recorded in EPA's Air Quality System (AQS) database. To account for missing data, the procedures found in appendix H to 40 CFR part 50 are used to adjust the actual number of monitored exceedances of the standard to yield the annual number of expected exceedances (''expected exceedance days'') at an air quality monitoring site. We determine if an area meets the one-hour ozone NAAQS by calculating, at each monitor, the average expected number of days over the standard per year (i.e., ''average number of expected exceedance days'') during the applicable 3-year period. See, the General Preamble, 57 FR 13498, April 16, 1992. The term ''exceedance'' is used throughout this document to describe a daily maximum ozone measurement that is equal to or exceeds 0.125 ppm which is the level of the standard after rounding. An area violates the ozone standard if, over a consecutive 3-year period, more than 3 days of expected exceedances occur at the same monitor. For more information please refer to 40 CFR 50.9 ''National one-hour primary and secondary ambient air quality standards for ozone'' and ''Interpretation of the one-hour Primary and Secondary National Ambient Air Quality Standards for Ozone'' (40 CFR part 50, appendix H).

B. EPA's Analysis of the One-Hour Ozone Data for the Portsmouth, NH Serious One-Hour Ozone Nonattainment Area

Table 2 shows a summary of one-hour ozone data for all the ozone monitors in the Portsmouth, NH serious one-hour ozone nonattainment area for the period 1997–2011. In short, if the three-year average expected exceedance rate, shown in the far right column, is less than or equal to 1.0, the site meets the one-hour ozone NAAQS. If all sites in the area are shown to meet the one-hour ozone NAAQS, it can be determined that the area has attained the one-hour ozone NAAQS.

TABLE 2—AVERAGE EXPECTED EXCEEDANCE RATE FOR THE ONE-HOUR OZONE STANDARD IN THE PORTSMOUTH, NH SERIOUS NONATTAINMENT AREA FOR 1997–2011

AQS No.	Site name	Years	Actual exceedance days over 0.124 ppm ozone	3-Year average expected exceedance rate
33–015–0012	Rye-Harbor State Park	1997–1999	2	0.7
		1998–2000	0	0.0
		1999–2001	1	0.3
		2000–2002	2	0.7
		2001–2003	2	0.7
		Site relocated to Science Center		

TABLE 2—AVERAGE EXPECTED EXCEEDANCE RATE FOR THE ONE-HOUR OZONE STANDARD IN THE PORTSMOUTH, NH SERIOUS NONATTAINMENT AREA FOR 1997–2011—Continued

AQS No.	Site name	Years	Actual exceedance days over 0.124 ppm ozone	3-Year average expected exceedance rate
33–015–0016	Rye-Seacoast Science Center	2003–2005	0	0.0
		2004–2006	0	0.0
		2005–2007	0	0.0
		2006–2008	0	0.0
		2007–2009	0	0.0
		2008–2010	0	0.0
		2009–2011	0	0.0
33–015–0013	Brentwood-South Road	1998–2000	0	0.0
		1999–2001	0	0.0
		2000–2002	0	0.0
		2001–2003	0	0.0
		Site Discontinued		
33–015–0009	Portsmouth-Vaughan Street	1997–1999	2	0.7
		1998–2000	1	0.3
		Site relocated to Port Authority		
33–015–0015	Portsmouth-Port Authority	2001–2003	2	0.7
		Site relocated to Peirce Island		
33–015–0014	Portsmouth-Peirce Island	2003–2005	0	0.0
		2004–2006	0	0.0
		2005–2007	0	0.0
		2006–2008	0	0.0
		2007–2009	0	0.0
		2008–2010	0	0.0
		2009–2011	0	0.0
33–017–3002	Rochester-Rochester Hill Road	1997–1999	1	0.3
		1998–2000	0	0.0
		1999–2001	0	0.0
		2000–2002	1	0.3
		2001–2003	1	0.3
		Site Discontinued		

As shown in Table 2, the Portsmouth, NH serious one-hour ozone nonattainment area attained the one-hour ozone NAAQS at the end of the 1999 ozone season, since the three ozone monitors (Rye-Harbor State Park, Portsmouth-Vaughan Street, and Rochester-Rochester Hill Road) had expected exceedance rates below 1.0. Thus EPA is proposing to determine that, based on the 1997–1999 complete, quality-assured and certified ozone data in the Air Quality System (AQS) database, the Portsmouth, NH serious one-hour ozone nonattainment area met the one-hour ozone NAAQS, by the attainment deadline of November 15, 1999. EPA is also proposing to determine that the area has remained in attainment of the one-hour NAAQS ever since.

C. EPA's Analysis of the One-Hour Ozone Data for the Manchester, NH Marginal One-Hour Ozone Nonattainment Area

Table 3 shows the results of one-hour ozone data for all the ozone monitors in the Manchester, NH marginal one-hour ozone nonattainment area for the period 1991–2011. In short, if the three-year average expected exceedance rate, shown in the far right column, is less than or equal to 1.0, the site meets the one-hour ozone NAAQS. If all sites in the area are shown to meet the one-hour ozone NAAQS, it can be determined that the area has attained the one-hour ozone NAAQS.

TABLE 3—AVERAGE EXPECTED EXCEEDANCE RATE FOR THE ONE-HOUR OZONE STANDARD IN THE MANCHESTER, NH MARGINAL ONE-HOUR OZONE NONATTAINMENT AREA FOR 1991–2011

AQS No.	Site name	Years	Actual exceedance days over 0.124 ppm ozone	3-Year expected exceedance rate
33–011–0016	Manchester-Hartnett Park	1991–1993	0	0.0
		1992–1994	0	0.0
		1993–1995	0	0.0
		1994–1996	0	0.0
		1995–1997	0	0.0
		1996–1998	0	0.0

TABLE 3—AVERAGE EXPECTED EXCEEDANCE RATE FOR THE ONE-HOUR OZONE STANDARD IN THE MANCHESTER, NH MARGINAL ONE-HOUR OZONE NONATTAINMENT AREA FOR 1991–2011—Continued

AQS No.	Site name	Years	Actual exceedance days over 0.124 ppm ozone	3-Year expected exceedance rate
		1997–1999	0	0.0
		Site relocated to Commercial Street		
33–011–0019	Manchester-North Commercial Street	1999–2000	0	*
		Site relocated to Pearl Street		
33–011–0020	Manchester-Pearl Street	2001–2003	0	0.0
		2002–2004	0	0.0
		2003–2005	0	0.0
		2004–2006	0	0.0
		2005–2007	0	0.0
		2006–2008	0	0.0
		2007–2009	0	0.0
		2008–2010	0	0.0
33–013–0007	Concord-Storrs Street	1992–1993	0	*
		1992–1994	0	0.0
		1993–1995	0	0.0
		1994–1996	0	0.0
		1995–1997	0	0.0
		1996–1998	0	0.0
		1997–1999	0	0.0
		1998–2000	0	0.0
		1999–2001	1	0.3
		2000–2002	1	0.3
		2001–2003	1	0.3
		Site relocated to Hazen Drive		
33–013–1007	Concord-Hazen Drive	2004–2006	0	0.0
		2005–2007	0	0.0
		2006–2008	0	0.0
		2007–2009	0	0.0
		2008–2010	0	0.0
		2009–2011	0	0.0

* Three year average expected exceedance rate cannot be calculated because the site has less than 3 years of data. For this area the two sites with an asterisk both have no exceedances for the time period in question.

As shown in Table 3, the Manchester, NH marginal one-hour ozone nonattainment area attained the one-hour ozone NAAQS at the end of the 1993 ozone season, since the one monitor (Manchester-Hartnett Park) with three years of data had an expected exceedance rate below 1.0. The other site (Concord-Storrs Street) began in 1992 and had no exceedance in either 1992 or 1993. Thus, EPA is proposing to determine that, based on the 1991–1993 complete, quality-assured and certified ozone data in the AQS database, the Manchester, NH marginal one-hour ozone nonattainment area met the one-hour ozone NAAQS, by its attainment deadline of November 15, 1993. Based on data from 1993–2011, EPA proposes to determine that the area has continued in attainment of the one-hour NAAQS ever since.

IV. What is the effect of the proposed determinations?

If EPA finalizes its proposed determination that the Portsmouth and Manchester, NH areas attained the one-hour ozone standard by their respective deadlines, there are no consequences for failure to attain that standard. For the Portsmouth, NH area, it would discharge any obligation with respect to contingency measures triggered by a failure to attain by the one-hour ozone attainment deadline. In addition, if EPA finalizes its determination that the Portsmouth, NH one-hour ozone area continues to attain the standard, under EPA's ''Clean Data Policy'' interpretation, which was first articulated for the one-hour standard and then codified for the eight-hour ozone standard (40 CFR 51.918), that determination suspends the Portsmouth, NH area's obligation to submit attainment-related requirements for the one-hour ozone standard, including contingency measures. See, for example, determination of one-hour ozone attainment for Baton Rouge, (75 FR 6570, February 10, 2010).

V. Proposed Determinations

For the reasons set forth in this notice, EPA is proposing four separate and independent determinations. First, EPA is proposing to determine that the Portsmouth, NH serious one-hour ozone nonattainment area met the applicable deadline of November 15, 1999, for attaining the one-hour NAAQS for ozone, based on 1997–1999 complete, certified and quality-assured ozone monitoring data. If EPA finalizes this determination, it would discharge any obligation with respect to contingency measures triggered by a failure to attain by the one-hour ozone attainment deadline. Second, EPA is proposing to determine that the Portsmouth, NH area is currently attaining the standard based on complete, certified and quality-assured ozone monitoring data since

1999 and continues to attain the standard based on the most recent three years of complete, quality assured ozone monitoring data. A final determination, by EPA, that the area is currently attaining the one-hour standard would relieve the area of its obligation to submit one-hour ozone contingency measures. Third, EPA is proposing to determine that the Manchester, NH marginal nonattainment area met the applicable deadline of November 15, 1993, for attaining the one-hour NAAQS for ozone. This proposed determination is based upon complete, certified, quality-assured ambient air quality monitoring data for the 1991–1993 monitoring period showing that the area had an expected ozone exceedance rate below the level of the now revoked one-hour ozone NAAQS during that period and therefore attained the standard by its applicable deadline. Fourth and last with respect to the Manchester, NH area, EPA is proposing to determine, that the area has attained the one-hour ozone standard since 1993, and continues to attain the standard based on the most recent three years of complete, quality-assured and certified ozone monitoring data.

EPA is soliciting public comments on the issues discussed in this notice or on other relevant matters. EPA will consider these comments before final action. Interested parties may participate in the Federal rulemaking procedure by submitting written comments to the EPA New England Regional Office listed in the **ADDRESSES** section of this **Federal Register**.

VI. Statutory and Executive Order Reviews

This action proposes to make determinations of attainment based on monitored air quality data, and/or does not impose additional requirements beyond those imposed by state law. For that reason, these proposed actions:

- Are not ''significant regulatory actions'' subject to review by the Office of Management and Budget under Executive Order 12866 (58 FR 51735, October 4, 1993);
- Do not impose an information collection burden under the provisions of the Paperwork Reduction Act (44 U.S.C. 3501 *et seq.*);
- Are certified as not having a significant economic impact on a substantial number of small entities under the Regulatory Flexibility Act (5 U.S.C. 601 *et seq.*);
- Do not contain any unfunded mandate or significantly or uniquely affect small governments, as described in the Unfunded Mandates Reform Act of 1995 (Pub. L. 104–4);
- Do not have Federalism implications as specified in Executive Order 13132 (64 FR 43255, August 10, 1999);
- Are not economically significant regulatory actions based on health or safety risks subject to Executive Order 13045 (62 FR 19885, April 23, 1997);
- Are not significant regulatory actions subject to Executive Order 13211 (66 FR 28355, May 22, 2001);
- Are not subject to requirements of Section 12(d) of the National Technology Transfer and Advancement Act of 1995 (15 U.S.C. 272 note) because application of those requirements would be inconsistent with the Clean Air Act; and
- Do not provide EPA with the discretionary authority to address, as appropriate, disproportionate human health or environmental effects, using practicable and legally permissible methods, under Executive Order 12898 (59 FR 7629, February 16, 1994).

In addition, these actions do not have tribal implications as specified by Executive Order 13175 (65 FR 67249, November 9, 2000), because the SIP is not approved to apply in Indian country located in the state, and EPA notes that it will not impose substantial direct costs on tribal governments or preempt tribal law.

List of Subjects in 40 CFR Part 52

Environmental protection, Air pollution control, Incorporation by reference, Intergovernmental relations, Nitrogen dioxide, Ozone, Reporting and recordkeeping requirements, Volatile organic compounds.

Authority: 42 U.S.C. 7401 *et seq.*

Dated: June 28, 2012.

H. Curtis Spalding,

Regional Administrator, EPA New England.

[FR Doc. 2012–17621 Filed 7–18–12; 8:45 am]

BILLING CODE 6560–50–P

DEPARTMENT OF COMMERCE

National Oceanic and Atmospheric Administration

50 CFR Part 622

[Docket No. 1206013412–2211–01]

RIN 0648–BB97

Fisheries of the Caribbean, Gulf of Mexico, and South Atlantic; Reef Fish Fishery of the Gulf of Mexico; Amendment 35

AGENCY: National Marine Fisheries Service (NMFS), National Oceanic and Atmospheric Administration (NOAA), Commerce.

ACTION: Proposed rule; request for comments.

SUMMARY: NMFS proposes to implement management measures described in Amendment 35 to the Fishery Management Plan for the Reef Fish Resources of the Gulf of Mexico (FMP) prepared by the Gulf of Mexico Fishery Management Council (Council). If implemented, this rule would establish sector annual catch limits (ACLs) and sector annual catch targets (ACTs) for greater amberjack; revise the sector accountability measures (AMs) for greater amberjack; and establish a commercial trip limit for greater amberjack. Additionally, Amendment 35 would modify the greater amberjack rebuilding plan. The intent of Amendment 35 is to end overfishing of greater amberjack, modify the greater amberjack rebuilding plan and help achieve optimum yield (OY) for the greater amberjack resource in accordance with the requirements of the Magnuson-Stevens Fishery Conservation and Management Act (Magnuson-Stevens Act).

DATES: Written comments must be received on or before August 20, 2012.

ADDRESSES: You may submit comments on the proposed rule identified by ''NOAA–NMFS–2012–0107'' by any of the following methods:

- *Electronic submissions:* Submit electronic comments via the Federal e-Rulemaking Portal: *http://www.regulations.gov.* Follow the ''Instructions'' for submitting comments.
- *Mail:* Rich Malinowski, Southeast Regional Office, NMFS, 263 13th Avenue South, St. Petersburg, FL 33701.

Instructions: All comments received are a part of the public record and will generally be posted to *http://www.regulations.gov* without change. All Personal Identifying Information (for example, name, address, etc.) voluntarily submitted by the commenter may be publicly accessible. Do not submit Confidential Business Information or otherwise sensitive or protected information. NMFS will accept anonymous comments (enter N/A in the required field if you wish to remain anonymous).

To submit comments through the Federal e-Rulemaking Portal: *http://www.regulations.gov,* enter ''NOAA–NMFS–2012–0107'' in the search field and click on ''search.'' After you locate the document ''Fisheries of the Caribbean, Gulf of Mexico, and South Atlantic; Reef Fish Fishery of the Gulf of Mexico; Amendment 35,'' click the ''Submit a Comment'' link in that row. This will display the comment Web form. You can then enter your submitter

information (unless you prefer to remain anonymous), and type your comment on the Web form. You can also attach additional files (up to 10MB) in Microsoft Word, Excel, WordPerfect, or Adobe PDF file formats only.

Comments received through means not specified in this rule will not be considered.

For further assistance with submitting a comment, see the ''Commenting'' section at *http://www.regulations.gov/#!faqs* or the Help section at *http://www.regulations.gov.*

Electronic copies of Amendment 35, which includes a draft environmental assessment, an initial regulatory flexibility analysis (IRFA), and a regulatory impact review, may be obtained from the Southeast Regional Office Web site at *http://sero.nmfs.noaa.gov/sf/GrouperSnapperandReefFish.htm.*

FOR FURTHER INFORMATION CONTACT: Rich Malinowski, Southeast Regional Office, telephone 727–824–5305, email *rich.malinowski@noaa.gov.*

SUPPLEMENTARY INFORMATION: The reef fish fishery of the Gulf is managed under the FMP. The FMP was prepared by the Council and is implemented through regulations at 50 CFR part 622 under the authority of the Magnuson-Stevens Act. All greater amberjack weights discussed in this proposed rule are in round weight.

Background

Since 1990, the Council and NMFS have implemented a series of management measures to prevent overfishing of the greater amberjack stock and achieve OY. Amendment 1 to the FMP added greater amberjack to the list of species in the FMP, set a recreational minimum size limit of 28 inches (71 cm), established a three-fish recreational bag limit, and set a commercial minimum size limit of 36 inches (91 cm) (55 FR 2079, January 22, 1990). Amendment 12 to the FMP reduced the greater amberjack recreational bag limit to one fish per person per day (61 FR 65983, December 16, 1996).

Greater amberjack were first determined to be overfished and undergoing overfishing in 2000. Secretarial Amendment 2 established a rebuilding plan for greater amberjack, starting in 2003, based on a stock assessment conducted in 2000 (68 FR 39898, July 3, 2003). A 2006 SEDAR benchmark stock assessment (SEDAR 9 2006c) determined that the greater amberjack stock was still overfished and undergoing overfishing. Amendment 30A to the FMP set the greater amberjack stock total allowable catch at 1,871,000 lb (848,671 kg), for the 2008 through 2010 fishing years. Using an allocation of 73 percent for the recreational sector and 27 percent for the commercial sector, Amendment 30A to the FMP established a recreational quota of 1,368,000 lb (620,514 kg), and a commercial quota of 503,000 lb (228,157 kg) (73 FR 38139, July 3, 2008). Amendment 30A also established greater amberjack AMs. These AMs state that if a sector's landings reaches, or is projected to reach, the applicable quota, the sector will close for the remainder of the fishing year. Additionally, in the event of a quota overage, the respective sector's quota will be reduced in the following fishing year by the amount of the respective sector's quota overage in the prior fishing year.

Status of Stock

In 2010, the Southeast Data, Assessment, and Review (SEDAR) stock assessment update (SEDAR 9 Update) was conducted for greater amberjack. The SEDAR 9 Update (2010) indicated that the greater amberjack stock was both overfished and undergoing overfishing.

In March 2011, the Council's Science and Statistical Committee (SSC) reviewed the update assessment, determined the assessment to be the best scientific information available, and accepted its conclusions that the stock was undergoing overfishing and is overfished. However, the SSC rejected as unreliable the absolute values that resulted in the conclusions and rejected the assessment's yield projections. The SSC believed that the yield projections were unreliable because they showed large sensitivity to small changes in initial conditions, fishing mortality rates, and catch. Therefore, the SSC did not use the stock assessment to set the overfishing limit (OFL) or the acceptable biological catch (ABC) but instead used Tier 3b of the ABC control rule that the Council was developing in the Generic Annual Catch Limit/Accountability Measure Amendment (Generic ACL Amendment). NMFS approved the Generic ACL Amendment and published a final rule implementing the management measures in that amendment in December 2011 (76 FR 82044, December 29, 2011).

Both Tier 1 and Tier 2 of the ABC control rule require stable yield projections, which were not available for greater amberjack. Tier 3 of the control rule applies when no assessment is available but landings data exist. Tier 3a applies when the stock is unlikely to undergo overfishing if future landings are equal to or moderately higher than the mean of recent landings. Tier 3b applies when expert evaluation of the best scientific information available indicates that recent landings may be unsustainable. Tier 3b uses the average of recent annual catches to set the OFL and the ABC is set as a percentage of the OFL. The ABC control rule states that the default is to set the ABC equal to 75 percent of the OFL. The SSC decided that, given the likelihood of ongoing overfishing, Tier 3b was appropriate for greater amberjack. Therefore, instead of relying on assessment projections, the SSC set the OFL for greater amberjack equal to the weight of the mean landings for the most recent ten years (2000–2009) and recommended the ABC for three years (2011–2013) be set at 75 percent of that 10-year mean.

The Council accepted the SSC's recommendations, set the ACL equal to the ABC, and consistent with the Generic ACL Amendment, set the ACT approximately 15 percent below the ACL. Although the ACL adopted by the Council was based on landings recorded during a time period when overfishing is believed to have been occurring, in the Generic ACL Amendment the Council determined that the Tier 3b methodology would end overfishing where applicable. NMFS approved this approach when approving the Generic ACL Amendment, and finds that following this approach in Amendment 35 is consistent with the FMP as amended.

Further, greater amberjack landings are somewhat variable over the 10-year period of 2000 through 2009, and there is no discernible trend in these landings. The lack of a discernible trend in landings data supports the conclusion that the stock size is more likely than not stable enough that the ABC recommendation (i.e., 75 percent of the OFL) and management measures implemented by the Council (setting the ACT approximately 15 percent below the ACL) will provide the reduction in greater amberjack fishing mortality necessary to end overfishing and rebuild the greater amberjack stock. A new benchmark assessment for greater amberjack is scheduled to occur in 2013. When the new assessment is completed, NMFS and the Council will be able to confirm that greater amberjack has met its rebuilding schedule.

Management Measures Contained in This Proposed Rule

This proposed rule would establish greater amberjack sector ACLs and sector ACTs (which are expressed as quotas in the regulatory text), revise the sector AMs, and establish a commercial trip limit for greater amberjack.

ACLs and ACTs

This rule would define specific ACLs for the greater amberjack commercial and recreational sectors. This proposed rule would also establish the ACTs (expressed as quotas in the regulatory text) for both sectors.

The National Standard 1 Guidelines (74 FR 3178, June 16, 2009) require the establishment of a mechanism for specifying ACLs in the FMP at a level such that overfishing does not occur in the fishery. Within Amendment 30A to the FMP, the Council and NMFS established greater amberjack commercial and recreational quotas that functioned as ACLs. An ACT is a management target established to account for management uncertainty in controlling the actual catch at or below the ACL. An ACT is used in the system of AMs so that the ACL is not exceeded. Therefore, a sector ACT should be set below the sector ACL to allow the sector to be closed when the ACT is projected to be reached. Amendment 35 would establish the greater amberjack ACL equal to the greater amberjack stock ABC at 1,780,000 lb (807,394 kg), and set the greater amberjack stock ACT at 1,539,000 lb (698,079 kg) based on the ACT Control Rule developed in the Generic ACL Amendment (76 FR 82044, December 29, 2011).

Sector allocations were established in Amendment 30A to the FMP and were not changed in Amendment 35. For greater amberjack, 27 percent of the ACL is allocated to the commercial sector and 73 percent of the ACL is allocated to the recreational sector.

This proposed rule would establish the greater amberjack commercial ACL at 481,000 lb (218,178 kg). The commercial ACT, which is equivalent to the greater amberjack commercial quota, would be reduced from 503,000 lb (228,157 kg), to 409,000 lb (185,519 kg). The commercial ACT would be set 15 percent below the ACL to account for management uncertainty.

This proposed rule would establish the greater amberjack recreational ACL at 1,299,000 lb (589,116 kg). The recreational ACT, which is equivalent to the greater amberjack recreational quota, would be reduced from 1,368,000 lb (620,514 kg), to 1,130,000 lb (512,559 kg). The recreational ACT would be set 13 percent below the ACL to account for management uncertainty.

AMs

This proposed rule would revise the AMs for both the greater amberjack commercial and recreational sectors. AMs are management controls that are implemented to prevent ACLs from being exceeded, and to correct or mitigate overages of the ACL if they occur. There are two categories of AMs, in-season AMs (when the ACL is met or projected to be met) and post-season AMs (when the ACL is exceeded).

The current in-season AM for the greater amberjack commercial sector closes the sector when commercial landings reach or are projected to reach the applicable quota. In addition, if despite such closure the commercial landings exceed the quota, the following year's quota is reduced by the amount of the quota overage in the prior fishing year (post-season AM). This rule would implement an ACT that is less than the ACL, creating a buffer between the two. The ACT would be the quota and this rule would require that the commercial sector close when the ACT is reached or projected to be reached. By closing the commercial sector when the ACT is reached or projected to be reached, there is less probability of exceeding the ACL. In addition to this revision of the in-season AM, this rule would revise the post-season AM as follows: If commercial landings exceed the commercial ACL, then during the following fishing year, both the commercial ACT (commercial quota) and the commercial ACL will be reduced by the amount of the prior years' commercial ACL overage.

The current in-season AM for the greater amberjack recreational sector closes the sector when recreational landings reach or are projected to reach the applicable quota. In addition, if despite such closure the recreational landings exceed the quota, the following year's recreational quota is reduced by the amount of the quota overage in the prior fishing year, and the recreational fishing season is reduced by the amount necessary to recover the overage from the prior fishing year (post-season AMs). This rule would implement an ACT that is less than the ACL, creating a buffer between the two. The ACT would act as the quota and this rule would require that the recreational sector close when the ACT is reached or projected to be reached. By closing the recreational sector when the ACT is reached or projected to be reached, there is less probability of exceeding the ACL. In addition to this revision of the in-season AM, this rule would revise the post-season AMs as follows: If recreational landings exceed the recreational ACL, then during the following fishing year, both the recreational ACT (recreational quota) and the recreational ACL will be reduced by the amount of the prior year's recreational ACL overage.

Commercial Trip Limit

Currently, there is no trip limit for the commercial sector. This rule would establish a commercial trip limit for greater amberjack of 2,000 lb (907 kg). This trip limit would be applicable until the commercial ACT (commercial quota) is reached or projected to be reached during a fishing year and the commercial sector is closed.

Other Action Contained in Amendment 35

Amendment 35 would revise the rebuilding plan for greater amberjack. The greater amberjack stock is currently in its last year of a 10-year rebuilding plan that began in 2003 and ends in 2012. Amendment 35 would modify the rebuilding plan in response to the results from the SEDAR 9 Update and subsequent SSC review and recommendations for the greater amberjack ABC.

Classification

Pursuant to section 304(b)(1)(A) of the Magnuson-Stevens Act, the AA has determined that this proposed rule is consistent with Amendment 35, the Magnuson-Stevens Act and other applicable law, subject to further consideration after public comment.

This proposed rule has been determined to be not significant for purposes of Executive Order 12866.

NMFS prepared an IRFA, as required by section 603 of the Regulatory Flexibility Act, 5 U.S.C. 603, for this rule. The IRFA describes the economic impact that this proposed rule, if adopted, would have on small entities. A description of the proposed rule, why it is being considered, and the objectives of, and legal basis for the rule are contained at the beginning of this section in the preamble and in the SUMMARY section of the preamble. A copy of the full analysis is available from NMFS (see **ADDRESSES**). A summary of the IRFA follows.

This proposed rule would establish greater amberjack sector ACLs and sector ACTs, revise the sector AMs, and establish a commercial trip limit for greater amberjack.

The Magnuson-Stevens Act provides the statutory basis for this rule. No duplicative, overlapping, or conflicting Federal rules have been identified. This proposed rule would not introduce any changes to current reporting, record-keeping, and other compliance requirements.

NMFS expects the proposed rule to directly affect commercial fishers and for-hire operators. The Small Business Administration established size criteria

for all major industry sectors in the U.S. including fish harvesters and for-hire operations. A business involved in fish harvesting is classified as a small business if independently owned and operated, is not dominant in its field of operation (including its affiliates), and its combined annual receipts are not in excess of $4.0 million (NAICS code 114111, finfish fishing) for all of its affiliated operations worldwide. For for-hire vessels, other qualifiers apply and the annual receipts threshold is $7.0 million (NAICS code 713990, recreational industries).

From 2005–2010, an average of 1,096 vessels had Federal commercial Gulf reef fish permits. Based on home port states reported in their permit applications, these vessels were distributed as follows: 897 vessels in Florida, 34 vessels in Alabama, 19 vessels in Mississippi, 58 vessels in Louisiana, 79 vessels in Texas, and 9 vessels in other states. Of the total number of federally permitted vessels, 750 vessels reported landings of at least 1 lb (0.6 kg) of reef fish. These vessels generated total dockside revenues of approximately $41.5 million dollars (2010 dollars), or an average of $55,000 per vessel. An average of 325 vessels reported landings of at least 1 lb (0.6 kg) of greater amberjack, with these vessels distributed as follows: 259 vessels in Florida, 15 vessels in Alabama/Mississippi, 32 in Louisiana, 32 in Texas, and 2 in other states. Dockside revenues from greater amberjack were approximately $600,000 (2010 dollars). Based on this information, all commercial fishing vessels expected to be directly affected by this proposed rule are determined for the purpose of this analysis to be small business entities.

The for-hire fleet is comprised of charterboats, which charge a fee on a vessel basis, and headboats, which charge a fee on an individual angler (head) basis. From 2005–2010, an average of 1,493 vessels had Federal Gulf reef fish charter/headboat permits, and based on homeport states reported in their permit applications these vessels were distributed as follows: 921 vessels in Florida, 147 vessels in Alabama, 61 vessels in Mississippi, 104 vessels in Louisiana, 238 vessels in Texas, and 22 in other states. There is no information available as to how many for-hire vessels harvested or targeted greater amberjack. The Federal Gulf charter/headboat permit does not distinguish between headboats and charterboats, but in 2010, the headboat survey program included 79 headboats. The majority of headboats were located in Florida (43), followed by Texas (19), Alabama (8), and Louisiana (4). The average charterboat is estimated to earn approximately $89,000 (2010 dollars) in annual revenues, while the average headboat is estimated to earn approximately $466,000 (2010 dollars). Based on these average annual revenue figures, all for-hire vessels expected to be directly affected by this proposed rule are determined for the purpose of this analysis to be small business entities.

Some fleet activity, i.e., multiple vessels owned by a single entity, may exist in both the commercial sector and the for-hire component of the recreational sector by an unknown extent, and NMFS treats all vessels as independent entities in this analysis.

NMFS expects the proposed rule to directly affect all federally permitted commercial vessels harvesting greater amberjack and for-hire vessels that operate in the Gulf reef fish fishery. All directly affected entities have been determined, for the purpose of this analysis, to be small entities. Therefore, NMFS determined that this proposed rule would affect a substantial number of small entities.

NMFS considers all entities expected to be affected by the proposed rule as small entities, so the issue of disproportional effects on small versus large entities does not arise in the present case.

Modifying the greater amberjack rebuilding plan by establishing sector ACLs and ACTs would result in a total annual revenue reduction of $99,000 (part of which would be profits) for the entire reef fish commercial sector's vessel operations because the proposed commercial ACT is less than average commercial landings. This revenue reduction takes into account the proposed AM revision that would close the commercial sector if the ACT is reached or projected to be reached. However, it does not account for the effects of the post-season AM that would reduce the applicable sector's ACT and ACL if the ACL were exceeded in the previous year. This post-season AM would be expected to reduce vessel revenues and profits by an unknown amount. The for-hire component of the recreational sector would largely remain unaffected by the proposed ACL/ACT and AM revisions, at least in the short term. The for-hire component of the recreational sector is not expected to reach its proposed ACL/ACT, implying that there would be no trip cancellations that would lead to for-hire profit reductions.

The proposed trip limit on commercial vessels that harvest greater amberjack would result in a revenue reduction (part of which would be profits) of $96,000 for the entire commercial harvesting operation. Because this estimated revenue reduction presupposed the adoption of the proposed ACL/ACT, it should not be considered in addition to the reduction from the proposed ACL/ACT. The smaller reduction appears to show that because the trip limit may allow for an extension of the commercial season it would slightly mitigate the adverse effects of a lower ACL/ACT.

The negative effects of the proposed action on the profits of commercial vessels are minimal when compared to the overall industry profits from harvesting reef fish. It is possible that some vessels may rely on greater amberjack for a sizeable portion of their overall harvesting operations so their profit reductions may be relatively large, but how many vessels there are in the fishery cannot be ascertained.

Four alternatives, including the preferred alternative, and two sub-options, of which one is the preferred option, were considered for modifying the greater amberjack rebuilding plan. The first alternative, the no action alternative, would retain the greater amberjack stock ACL. This is not a viable alternative because the current stock ACL is higher than the ABC being set for greater amberjack.

Like the preferred alternative, the second alternative would set a stock ACL equal to the ABC, which is about 5 percent lower than the current stock ACL. However, this alternative would not set an ACT below the level of the ACL. Among the alternatives, this would provide the best scenario for short-term profitability of small entities. Without an ACT, however, this ACL level may be exceeded, particularly since the stock ACL has been exceeded in the last 2 years (2009 and 2010). Exceeding this ACL would lower the probability of protecting and rebuilding the overfished stock. The sub-option which was not selected would set the stock ACL at 18 percent below the current ACL. This would have the same impacts on profits as the preferred option for the current year, but it would potentially result in a worse profit condition in the subsequent year because it would require post-season overage adjustments if the quotas were exceeded. The third alternative, which would establish a stock ACL of zero, would result in the largest profit reductions to both the commercial sector and for-hire component of the recreational sector.

Two alternatives, including the preferred alternative, were considered for revising the commercial AM. The

only alternative to the preferred alternative is the no action alternative. This would result in lesser short-term profit reductions than the preferred alternative. The downside of the no action alternative is that it would subject the commercial sector to a greater likelihood of facing a post-season AM that would reduce the succeeding year's ACL and ACT and therefore commercial vessel profits as well.

Two alternatives, including the preferred alternative, were considered for revising the recreational AM. The only alternative to the preferred alternative is the no action alternative. The no action alternative would result in greater short-term profits than the preferred alternative. Its downside is that it would subject the sector to a greater likelihood of facing a post-season AM that would reduce the succeeding year's ACL and ACT and therefore for-hire vessel profits as well.

Three alternatives, including the preferred alternative, were considered for commercial management measures. The first alternative is the no action alternative and would have no effects on vessel profits. The second alternative, which would establish a vessel trip limit, while maintaining the March 1–May 31 seasonal closure, includes four options. The preferred option would establish a commercial trip limit of 2,000 lb (907 kg), which as noted above would result in a revenue reduction of $96,000. The other options would establish a trip limit of 1,500 lb (680 kg), 1,000 lb (454 kg), or 500 lb (227 kg). Given the preferred ACL/ACT alternative, these other options would result in revenue reductions of $95,000, $97,000, and $198,000, respectively. These other trip limit options would result in a longer fishing season than the preferred option. The commercial trip limit of 1,500 lb (680 kg) would result in a lower revenue reduction than the preferred option because revenue gains from a longer fishing season would outweigh revenue losses from a lower trip limit. For the other two trip limit options however, the trip limits are so low that revenue gains from a longer fishing season would not outweigh revenue losses from a lower trip limit. Profit reductions would also likely occur with these other options.

The third alternative, which would eliminate the March 1—May 31 seasonal closure, includes 4 trip limit options. The trip limit options are 2,000 lb (907 kg), 1,500 lb (680 kg), 1,000 lb (454 kg), or 500 lb (227 kg). Given the preferred ACL/ACT alternative, these options would result in revenue reductions of $123,000, $120,000, $115,000, and $110,000 respectively. These revenue reductions for trip limits not linked with a seasonal closure are greater when compared to trip limits linked with a seasonal closure because they would result in a longer quota closure during the fishing year. Profit reductions would also likely occur with these options.

In Amendment 35, the Council considered several actions for which the no-action alternative was the preferred alternative.

Four alternatives were considered for modifying the recreational minimum size limit for greater amberjack. The first alternative is the no action alternative, which will not affect the profits of for-hire vessels. The other alternatives would raise the recreational minimum size limit to 32 in (81 cm), 34 in (86 cm), or 36 in (91 cm), fork length. These other alternatives would possibly result in for-hire vessel profit reductions to the extent that some trips would be cancelled.

Five alternatives were considered for modifying the recreational closed season for greater amberjack. The preferred alternative is the no action alternative, and so would not affect the profits of for-hire vessels. The second alternative would remove the fixed closed season so that the recreational sector would open on January 1 and would remain open until the recreational ACT (recreational quota) is reached. This alternative would result in a short-term profit increase of $75,000 to charterboats and an unknown profit increase to headboats under the preferred ACL/ACT alternative. These profit increases hinge on the assumption that displaced effort due to the quota closure would not shift to the open season. Any effort shift would likely negate such profit increases.

The third alternative would modify the recreational sector's seasonal closure to March 1–May 31. This alternative would result in a profit loss of approximately $300,000 to charterboats and an unknown profit loss to headboats. Profit losses would be less if displaced effort from the closed months shifted to the open months. The fourth alternative would modify the recreational seasonal closure to January 1–May 31. This alternative would result in a profit loss of approximately $400,000 to charterboats and an unknown profit loss to headboats. Profit losses would be less if displaced effort from the closed months shifted to the open months. The fifth alternative would modify the recreational seasonal closure to June 1–July 23. In the absence of effort shifting, this alternative would result in a short-term profit increase of approximately $80,000 to charterboats and an unknown profit increase to headboats. Any effort shift would tend to negate these profit increases.

List of Subjects in 50 CFR Part 622

Fisheries, Fishing, Puerto Rico, Reporting and recordkeeping requirements, Virgin Islands.

Dated: July 12, 2012.

Alan D. Risenhoover,

Director, Office of Sustainable Fisheries, performing the functions and duties of the Deputy Assistant Administrator for Regulatory Programs, National Marine Fisheries Service.

For the reasons set out in the preamble, 50 CFR part 622 is proposed to be amended as follows:

PART 622—FISHERIES OF THE CARIBBEAN, GULF, AND SOUTH ATLANTIC

1. The authority citation for part 622 continues to read as follows:

Authority: 16 U.S.C. 1801 *et seq.*

2. In § 622.42, paragraphs (a)(1)(v) and (a)(2)(ii) are revised to read as follows:

§ 622.42 Quotas.

* * * * *

(a) * * * (1) * * *

(v) Greater amberjack—409,000 lb (185,519 kg), round weight.

* * * * *

(2) * * *

(ii) *Recreational quota for greater amberjack.* The recreational quota for greater amberjack is 1,130,000 lb (512,559 kg), round weight.

* * * * *

3. In § 622.44, paragraph (d) is added to read as follows:

§ 622.44 Commercial trip limits.

* * * * *

(d) *Gulf greater amberjack.* Until the quota specified in § 622.42(a)(1)(v) is reached, 2,000 lb (907 kg), round weight. See § 622.43(a)(1)(i) for the limitations regarding greater amberjack after the quota is reached.

* * * * *

4. In § 622.49, paragraph (a)(1) is revised to read as follows:

§ 622.49 Annual catch limits (ACLs) and accountability measures (AMs).

(a) * * * (1) *Greater amberjack.* (i) *Commercial sector*—(A) If commercial landings, as estimated by the SRD, reach or are projected to reach the annual catch target (ACT) specified in § 622.42(a)(1)(v) (commercial quota), the AA will file a notification with the Office of the Federal Register to close the commercial sector for the remainder of the fishing year.

(B) In addition to the measures specified in paragraph (a)(1)(i)(A) of this section, if commercial landings, as estimated by the SRD, exceed the commercial ACL, as specified in (a)(1)(i)(C) of this section, the AA will file a notification with the Office of the Federal Register, at or near the beginning of the following fishing year to reduce the commercial ACT (commercial quota) and the commercial ACL for that following year by the amount of any commercial ACL overage in the prior fishing year.

(C) The commercial ACL for greater amberjack is 481,000 lb (218,178 kg), round weight.

(ii) *Recreational sector*—(A) If recreational landings, as estimated by the SRD, reach or are projected to reach the ACT specified in § 622.42(a)(2)(ii) (recreational quota), the AA will file a notification with the Office of the Federal Register to close the recreational sector for the remainder of the fishing year.

(B) In addition to the measures specified in paragraph (a)(1)(ii)(A) of this section, if recreational landings, as estimated by the SRD, exceed the recreational ACL, as specified in (a)(1)(ii)(C) of this section, the AA will file a notification with the Office of the Federal Register, at or near the beginning of the following fishing year to reduce the recreational ACT (recreational quota) and the recreational ACL for that following year by the amount of any recreational ACL overage in the prior fishing year.

(C) The recreational ACL for greater amberjack is 1,299,000 lb (589,216 kg), round weight.

* * * * *

[FR Doc. 2012–17491 Filed 7–18–12; 8:45 am]

BILLING CODE 3510–22–P

Notices

Federal Register

Vol. 77, No. 139

Thursday, July 19, 2012

This section of the FEDERAL REGISTER contains documents other than rules or proposed rules that are applicable to the public. Notices of hearings and investigations, committee meetings, agency decisions and rulings, delegations of authority, filing of petitions and applications and agency statements of organization and functions are examples of documents appearing in this section.

ARCTIC RESEARCH COMMISSION

Reports and Updates on Arctic Research Programs and Projects; Meetings

July 6, 2012.

Notice is hereby given that the U.S. Arctic Research Commission will hold its 98th meeting in Fairbanks, Alaska, on August 9–10, 2012. The business sessions, open to the public, will convene at 8:30 a.m. on August 9 and 11:30 on August 10 after a scheduled executive session.

The Agenda items include:

(1) Call to order and approval of the agenda

(2) Approval of the minutes from the 97th meeting

(3) Commissioners and staff reports

(4) Discussion and presentations concerning Arctic research activities

The focus of the meeting will be reports and updates on programs and research projects affecting the Arctic.

If you plan to attend this meeting, please notify us via the contact information below. Any person planning to attend who requires special accessibility features and/or auxiliary aids, such as sign language interpreters, must inform the Commission of those needs in advance of the meeting.

Contact person for further information: John Farrell, Executive Director, U.S. Arctic Research Commission, 703–525–0111 or TDD 703–306–0090.

John Farrell,

Executive Director.

[FR Doc. 2012–17463 Filed 7–18–12; 8:45 am]

BILLING CODE 7555–01–P

DEPARTMENT OF COMMERCE

Submission for OMB Review; Comment Request

The Department of Commerce will submit to the Office of Management and Budget (OMB) for clearance the following proposal for collection of information under the provisions of the Paperwork Reduction Act (44 U.S.C. Chapter 35).

Agency: Economic Development Administration (EDA).

Title: Requirements for Approved Construction Investments.

OMB Control Number: 0610–0096.

Form Number(s): None.

Type of Request: Regular submission (extension of a currently approved information collection).

Number of Respondents: 4,200.

Average Hours per Response: 2.

Burden Hours: 8,400.

Needs and Uses: EDA may award assistance for construction projects through its Public Works and Economic Development program, as well as its Economic Adjustment Assistance (EEA) program. Public Works and Economic Development Program investments help support the construction or rehabilitation of essential public infrastructure and facilities necessary to generate or retain private sector jobs and investments, attract private sector capital, and promote vibrant economic ecosystems, regional competitiveness and innovation. The EAA Program provides a wide range of technical, planning and infrastructure assistance in regions experiencing adverse economic changes that may occur suddenly or over time.

The Summary of EDA Construction Standards (commonly referred to as the ''bluebook'') and the Standard Terms and Conditions for Construction Projects, as well as any special conditions incorporated into the terms and conditions at the time of award, supplement the requirements that apply to EDA-funded construction projects.

Affected Public: Current recipients of EDA construction (Public Works or Economic Adjustment) assistance, to include (1) Cities or other political subdivisions of a state, including a special purpose unit of state or local government engaged in economic or infrastructure development activities, or a consortium of political subdivisions; (2) states; (3) institutions of higher education or a consortium of institutions of higher education; (4) public or private non-profit organizations or associations; (5) District Organizations; and (6) Indian Tribes or a consortia of Indian Tribes.

Frequency: Annually.

Respondent's Obligation: Required to obtain or retain benefits.

OMB Desk Officer: Nicholas Fraser, (202) 395–5887.

Copies of the above information collection proposal can be obtained by calling or writing Jennifer Jessup, Departmental Paperwork Clearance Officer, (202) 482–0336, Department of Commerce, Room 6616, 14th and Constitution Avenue NW., Washington, DC 20230 (or via the Internet at *JJessup@doc.gov*).

Written comments and recommendations for the proposed information collection should be sent within 30 days of publication of this notice to Nicholas A. Fraser, OMB Desk Officer, Fax number (202) 395–7285, or via the Internet at *Nicholas_A._Fraser@omb.eop.gov.*

Dated: July 13, 2012.

Gwellnar Banks,

Management Analyst, Office of the Chief Information Officer.

[FR Doc. 2012–17553 Filed 7–18–12; 8:45 am]

BILLING CODE 3510–34–P

DEPARTMENT OF COMMERCE

Bureau of Industry and Security

Materials Technical Advisory Committee; Notice of Partially Closed Meeting

The Materials Technical Advisory Committee will meet on August 9, 2012, 10:00 a.m., Herbert C. Hoover Building, Room 3884, 14th Street between Constitution & Pennsylvania Avenues NW., Washington, DC. The Committee advises the Office of the Assistant Secretary for Export Administration with respect to technical questions that affect the level of export controls applicable to materials and related technology.

Agenda

Open Session

1. Opening remarks and introductions.

2. Remarks from Bureau of Industry and Security senior management.

3. Discussion on the role of the Implementation Support Unit of the Biological Weapons Convention.

4. Report on Composite Working Group and other working groups.

5. Report on regime-based activities.

6. Public comments and new business.

Closed Session

7. Discussion of matters determined to be exempt from the provisions relating to public meetings found in 5 U.S.C. app. 2 §§ 10(a)(1) and 10(a)(3).

The open session will be accessible via teleconference to 20 participants on a first come, first serve basis. To join the conference, submit inquiries to Ms. Yvette Springer at *Yvette.Springer@bis.doc.gov*, no later than August 2, 2012.

A limited number of seats will be available during the public session of the meeting. Reservations are not accepted. To the extent time permits, members of the public may present oral statements to the Committee. Written statements may be submitted at any time before or after the meeting. However, to facilitate distribution of public presentation materials to Committee members, the materials should be forwarded prior to the meeting to Ms. Springer via email.

The Assistant Secretary for Administration, with the concurrence of the delegate of the General Counsel, formally determined on November 16, 2011, pursuant to Section 10(d) of the Federal Advisory Committee Act, as amended (5 U.S.C. app. 2 § 10(d)), that the portion of the meeting dealing with pre-decisional changes to the Commerce Control List and the U.S. export control policies shall be exempt from the provisions relating to public meetings found in 5 U.S.C. app. 2 § § 10(a)(1) and 10(a)(3). The remaining portions of the meeting will be open to the public. For more information, call Yvette Springer at (202) 482–2813.

Dated: July 13, 2012.

Yvette Springer,

Committee Liaison Officer.

[FR Doc. 2012–17617 Filed 7–18–12; 8:45 am]

BILLING CODE 3510–JT–P

DEPARTMENT OF COMMERCE

Bureau of Industry and Security

Materials Processing Equipment Technical Advisory Committee; Notice of Partially Closed Meeting

The Materials Processing Equipment Technical Advisory Committee (MPETAC) will meet on August 7, 2012, 9:00 a.m., Room 3884, in the Herbert C. Hoover Building, 14th Street between Pennsylvania and Constitution Avenues NW., Washington, DC. The Committee advises the Office of the Assistant Secretary for Export Administration with respect to technical questions that affect the level of export controls applicable to materials processing equipment and related technology.

Agenda

Open Session

1. Opening remarks and introductions.

2. Presentation of papers and comments by the Public.

3. Discussions on results from last, and proposals for next Wassenaar meeting.

4. Report on proposed and recently issued changes to the Export Administration Regulations.

5. Other business.

Closed Session

6. Discussion of matters determined to be exempt from the provisions relating to public meetings found in 5 U.S.C. app. 2 §§ 10(a)(1) and 10(a)(3).

The open session will be accessible via teleconference to 20 participants on a first come, first serve basis. To join the conference, submit inquiries to Ms. Yvette Springer at *Yvette.Springer@bis.doc.gov*, no later than July 31, 2012.

A limited number of seats will be available for the public session. Reservations are not accepted. To the extent that time permits, members of the public may present oral statements to the Committee. The public may submit written statements at any time before or after the meeting. However, to facilitate the distribution of public presentation materials to the Committee members, the Committee suggests that presenters forward the public presentation materials prior to the meeting to Ms. Springer via email.

The Assistant Secretary for Administration, with the concurrence of the delegate of the General Counsel, formally determined on November 21, 2011, pursuant to Section 10(d) of the Federal Advisory Committee Act, as amended (5 U.S.C. app. 2 § 10(d)), that the portion of the meeting dealing with matters the premature disclosure of which would be likely to frustrate significantly implementation of a proposed agency action as described in 5 U.S.C. 552b(c)(9)(B) shall be exempt from the provisions relating to public meetings found in 5 U.S.C. app. 2 §§ 10(a)(1) and 10(a)(3). The remaining portions of the meeting will be open to the public.

For more information, call Yvette Springer at (202) 482–2813.

Dated: July 13, 2012.

Yvette Springer,

Committee Liaison Officer.

[FR Doc. 2012–17619 Filed 7–18–12; 8:45 am]

BILLING CODE 3510–JT–P

DEPARTMENT OF COMMERCE

International Trade Administration

Application(s) for Duty-Free Entry of Scientific Instruments

Pursuant to Section 6(c) of the Educational, Scientific and Cultural Materials Importation Act of 1966 (Pub. L. 89–651, as amended by Pub. L. 106–36; 80 Stat. 897; 15 CFR part 301), we invite comments on the question of whether instruments of equivalent scientific value, for the purposes for which the instruments shown below are intended to be used, are being manufactured in the United States.

Comments must comply with 15 CFR 301.5(a)(3) and (4) of the regulations and be postmarked on or before August 8, 2012. Address written comments to Statutory Import Programs Staff, Room 3720, U.S. Department of Commerce, Washington, DC 20230. Applications may be examined between 8:30 a.m. and 5:00 p.m. at the U.S. Department of Commerce in Room 3720.

Docket Number: 12–033. *Applicant:* UChicago Argonne, LLC, 9700 South Cass Ave., Lemont, IL 60439. *Instrument:* Low-Temperature Scanning Tunneling Microscope System. *Manufacturer:* CreaTec, Germany. *Intended Use:* The instrument will be used to investigate properties of materials and novel phenomena related to nanoscale science. This instrument is specialized for creating artificial nanoscale structures on an atom-by-atom basis using nascent atom manipulation techniques. The instrument will be used to investigate the amount of force required to move one atom on a materials surface while simultaneously measuring local electronic structural changes during atom movement. Requirements for this instrument include: simultaneous measurements of tunneling current and force signals at an atomic scale, STM scanner with q-Plus tuning fork type AFM set-up, single atom and single molecule manipulation capabilities, single atom/molecule tunneling spectroscopy, ultrahigh vacuum compatibility, bath cryostat with LHe hold time greater than 72 hours and a LN2 hold time greater than 72 hours, optical access at low temperature, at least 6 K substrate temperature should be achieved, maximum drift rate at base

temperature less than 0.2 nm/h, and a computer software allowing manipulation of individual atoms and molecules. *Justification for Duty-Free Entry:* There are no instruments of the same general category manufactured in the United States. *Application accepted by Commissioner of Customs:* June 20, 2012.

Dated: July 12, 2012.

Gregory W. Campbell,

Director of Subsidies Enforcement, Import Administration.

[FR Doc. 2012–17620 Filed 7–18–12; 8:45 am]

BILLING CODE 3510–DS–P

DEPARTMENT OF COMMERCE

International Trade Administration

Application(s) for Duty-Free Entry of Scientific Instruments

Pursuant to Section 6(c) of the Educational, Scientific and Cultural Materials Importation Act of 1966 (Pub. L. 89–651, as amended by Pub. L. 106–36; 80 Stat. 897; 15 CFR part 301), we invite comments on the question of whether instruments of equivalent scientific value, for the purposes for which the instruments shown below are intended to be used, are being manufactured in the United States.

Comments must comply with 15 CFR 301.5(a)(3) and (4) of the regulations and be postmarked on or before August 8, 2012. Address written comments to Statutory Import Programs Staff, Room 3720, U.S. Department of Commerce, Washington, DC 20230. Applications may be examined between 8:30 a.m. and 5:00 p.m. at the U.S. Department of Commerce in Room 3720.

Docket Number: 12–026. *Applicant:* University of Wisconsin-Madison, 21 N. Park St., Suite 6101, Madison, WI 53715–1218. *Instrument:* Electron Microscope. *Manufacturer:* FEI Company, the Netherlands. *Intended Use:* The instrument will be used to investigate biopolymers and biological materials such as viruses, and animal and plant cells. *Justification for Duty-Free Entry:* There are no instruments of the same general category manufactured in the United States. *Application accepted by Commissioner of Customs:* June 11, 2012.

Docket Number: 12–029. *Applicant:* University of Alabama at Birmingham, 1530 3rd Ave. South—BED 254 Birmingham, AL 35294–4461. *Instrument:* Electron Microscope. *Manufacturer:* FEI Company, Czech Republic. *Intended Use:* The instrument will be used to study the morphological features and chemical composition of metallic, ceramic, polymeric, composite and biological materials (human and animal tissue). *Justification for Duty-Free Entry:* There are no instruments of the same general category manufactured in the United States. *Application accepted by Commissioner of Customs:* June 11, 2012.

Docket Number: 12–030. *Applicant:* Ohio State University, 2041 College Rd., Columbus, OH 43210. *Instrument:* Electron Microscope. *Manufacturer:* FEI Company, the Netherlands. *Intended Use:* The instrument will be used to measure the morphology and orientation of grains and particles, as well as the structure, long and short range ordering, number and type of defects and the elemental composition of various phases in ceramics and metals including high-temperature superconductors, high-temperature metal alloys, evaporated metal films, silicon-germanium quantum dots, soils and geological materials, polymers and possibly some biological samples. *Justification for Duty-Free Entry:* There are no instruments of the same general category manufactured in the United States. *Application accepted by Commissioner of Customs:* June 4, 2012.

Docket Number: 12–032. *Applicant:* Louisiana State University, Department of Biological Sciences, 202 Life Sciences Building, Baton Rouge, LA 70803–1715. *Instrument:* Electron Microscope. *Manufacturer:* JEOL, Japan. *Intended Use:* The instrument will be used to examine the ultra-structure of cells and tissues from various model organisms such as Drosophila melanogaster (fruit fly), as well as fabricated nano-materials/polymers, rods made of bolaform amphiphile, and ionic liquids. *Justification for Duty-Free Entry:* There are no instruments of the same general category manufactured in the United States. *Application accepted by Commissioner of Customs:* June 20, 2012.

Dated: July 12, 2012.

Gregory W. Campbell,

Director of Subsidies Enforcement, Import Administration.

[FR Doc. 2012–17622 Filed 7–18–12; 8:45 am]

BILLING CODE 3510–DS–P

DEPARTMENT OF COMMERCE

International Trade Administration

Civil Nuclear Trade Advisory Committee (CINTAC) Public Meeting

AGENCY: International Trade Administration, Department of Commerce.

ACTION: Notice of Federal Advisory Committee Meeting.

SUMMARY: This notice sets forth the schedule and proposed agenda of a meeting of the CINTAC.

DATES: The meeting is scheduled for Tuesday, August 28, 2012, at 9:00 a.m. Eastern Daylight Time (EDT). The public session is from 3:00 p.m.–4:00 p.m.

ADDRESSES: The meeting will be held in Room 4830, U.S. Department of Commerce, Herbert Clark Hoover Building, 1401 Constitution Ave. NW., Washington, DC 20230.

FOR FURTHER INFORMATION CONTACT: Mr. David Kincaid, Office of Energy & Environmental Industries, ITA, Room 4053, 1401 Constitution Ave. NW., Washington, DC 20230. (Phone: 202–482–1706; Fax: 202–482–5665; email: *david.kincaid@trade.gov*).

SUPPLEMENTARY INFORMATION:

Background: The CINTAC was established under the discretionary authority of the Secretary of Commerce and in accordance with the Federal Advisory Committee Act (5 U.S.C. App.), in response to an identified need for consensus advice from U.S. industry to the U.S. Government regarding the development and administration of programs to expand United States exports of civil nuclear goods and services in accordance with applicable U.S. laws and regulations, including advice on how U.S. civil nuclear goods and services export policies, programs, and activities will affect the U.S. civil nuclear industry's competitiveness and ability to participate in the international market.

Topics to be considered: The agenda for the August 28, 2012 CINTAC meeting is as follows:

Closed Session (9:00 a.m.–3:00 p.m.)

1. Discussion of matters determined to be exempt from the provisions of the Federal Advisory Committee Act relating to public meetings found in 5 U.S.C. App. (10)(a)(1) and 10(a)(3).

Public Session (3:00 p.m.–4:00 p.m.)

1. International Trade Administration's Civil Nuclear Trade Initiative Update.
2. Civil Nuclear Trade Promotion Activities Discussion.
3. Public comment period.

The open session will be disabled-accessible. Public seating is limited and available on a first-come, first-served basis. Members of the public wishing to attend the meeting must notify Mr. David Kincaid at the contact information below by 5:00 p.m. EDT on

Friday, August 24, 2012 in order to pre-register for clearance into the building. Please specify any requests for reasonable accommodation at least five business days in advance of the meeting. Last minute requests will be accepted, but may be impossible to fill.

A limited amount of time will be available for pertinent brief oral comments from members of the public attending the meeting. To accommodate as many speakers as possible, the time for public comments will be limited to two (2) minutes per person, with a total public comment period of 30 minutes. Individuals wishing to reserve speaking time during the meeting must contact Mr. Kincaid and submit a brief statement of the general nature of the comments and the name and address of the proposed participant by 5:00 p.m. EDT on Friday, August 24, 2012. If the number of registrants requesting to make statements is greater than can be reasonably accommodated during the meeting, ITA may conduct a lottery to determine the speakers. Speakers are requested to bring at least 20 copies of their oral comments for distribution to the participants and public at the meeting.

Any member of the public may submit pertinent written comments concerning the CINTAC's affairs at any time before and after the meeting. Comments may be submitted to the Civil Nuclear Trade Advisory Committee, Office of Energy & Environmental Industries, Room 4053, 1401 Constitution Ave. NW., Washington, DC 20230. For consideration during the meeting, and to ensure transmission to the Committee prior to the meeting, comments must be received no later than 5:00 p.m. EDT on Friday, August 24, 2012. Comments received after that date will be distributed to the members but may not be considered at the meeting.

The Assistant Secretary for Administration, with the concurrence of the delegate of the General Counsel, formally determined on February 22, 2012, pursuant to section 10(d) of the Federal Advisory Committee Act, as amended (5 U.S.C. App. (10)(d)), (1) that the portion of the meeting dealing with matters the disclosure of which would be likely to frustrate significantly implementation of an agency action as described in 5 U.S.C. 552b(c)(9)(B) shall be exempt from the provisions relating to public meetings found in 5 U.S.C. App. (10)(a)(1) and 10(a)(3); and (2) that the portion of the meeting dealing with matters requiring disclosure of trade secrets and commercial or financial information as described in 5 U.S.C. 552b(c)(4) shall be exempt from the provisions relating to public meetings found in 5 U.S.C. App. (10)(a)(1) and 10(a)(3). The remaining portions of the meeting will be open to the public.

Copies of CINTAC meeting minutes will be available within 90 days of the meeting.

Man K. Cho,

Team Leader for Energy, Office of Energy and Environmental Industries.

[FR Doc. 2012–17525 Filed 7–18–12; 8:45 am]

BILLING CODE 3510–DR–P

DEPARTMENT OF DEFENSE

Office of the Secretary

Department of Defense Wage Committee; Notice of Closed Meetings

AGENCY: Department of Defense (DoD).

ACTION: Notice of closed meetings.

SUMMARY: Pursuant to the provisions of section 10 of Public Law 92–463, the Federal Advisory Committee Act, notice is hereby given that closed meeting of the Department of Defense Wage Committee will be held.

DATES: Tuesday, August 7, 2012, at 10 a.m.

ADDRESSES: 4800 Mark Center Drive, Room 05K25, Alexandria, VA 22350–1100.

FOR FURTHER INFORMATION CONTACT: Additional information concerning the meetings may be obtained by writing to the Chairman, Department of Defense Wage Committee, 4000 Defense Pentagon, Washington, DC 20301–4000.

SUPPLEMENTARY INFORMATION: Under the provisions of section 10(d) of Public Law 92–463, the Department of Defense has determined that the meetings meet the criteria to close meetings to the public because the matters to be considered are related to internal rules and practices of the Department of Defense and the detailed wage data to be considered were obtained from officials of private establishments with a guarantee that the data will be held in confidence.

However, members of the public who may wish to do so are invited to submit material in writing to the chairman concerning matters believed to be deserving of the Committee's attention.

Dated: July 13, 2012.

Aaron Siegel,

Alternate OSD Federal Register Liaison Officer, Department of Defense.

[FR Doc. 2012–17502 Filed 7–18–12; 8:45 am]

BILLING CODE 5001–06–P

DEPARTMENT OF DEFENSE

Office of the Secretary

Department of Defense Wage Committee; Notice of Closed Meetings

AGENCY: Department of Defense (DoD).

ACTION: Notice of closed meetings.

SUMMARY: Pursuant to the provisions of section 10 of Public Law 92–463, the Federal Advisory Committee Act, notice is hereby given that closed meeting of the Department of Defense Wage Committee will be held.

DATES: Tuesday, August 21, 2012, at 10 a.m.

ADDRESSES: 4800 Mark Center Drive, Room 05K25, Alexandria, VA 22350–1100.

FOR FURTHER INFORMATION CONTACT: Additional information concerning the meetings may be obtained by writing to the Chairman, Department of Defense Wage Committee, 4000 Defense Pentagon, Washington, DC 20301–4000.

SUPPLEMENTARY INFORMATION: Under the provisions of section 10(d) of Public Law 92–463, the Department of Defense has determined that the meetings meet the criteria to close meetings to the public because the matters to be considered are related to internal rules and practices of the Department of Defense and the detailed wage data to be considered were obtained from officials of private establishments with a guarantee that the data will be held in confidence.

However, members of the public who may wish to do so are invited to submit material in writing to the chairman concerning matters believed to be deserving of the Committee's attention.

Dated: July 13, 2012.

Aaron Siegel,

Alternate OSD Federal Register Liaison Officer, Department of Defense.

[FR Doc. 2012–17503 Filed 7–18–12; 8:45 am]

BILLING CODE 5001–06–P

DEPARTMENT OF DEFENSE

Department of the Air Force

Notice Is Given of the Names of Members of the Performance Review Board for the Department of the Air Force

ACTION: Notice.

SUMMARY: Notice is given of the names of members of the Performance Review Board for the Department of the Air Force.

DATES: *Effective Date:* November 6, 2012.

SUPPLEMENTARY INFORMATION: Pursuant to 5 U.S.C. 4314(c) (1–5), the Department of the Air Force (AF) announces the appointment of members to the AF's Senior Executive Service (SES) Pay Pool and Performance Review Board (PRB). Appointments are made by the authorizing official. Each board member shall review and evaluate performance scores provided by the SES' immediate supervisor. Performance standards must be applied consistently across the AF. The board will make final recommendations to the authorizing official relative to the performance of the executive.

The members of the 2012 Performance Review Board for the U.S. Air Force are:

1. Board President—Gen. Rice, Commander, Air Education and Training Command.
2. Lt. Gen. Hesterman, Military Deputy for Readiness, Office of the Secretary of Defense, Personnel & Readiness.
3. Lt. Gen. Davis, Military Deputy, Office of the Assistant Secretary of the Air Force for Acquisitions.
4. Mr. Corsi, Assistant Deputy Chief of Staff for Manpower, Personnel and Services.
5. Mrs. Westgate, Assistant Deputy Chief of Staff for Strategic Plans and Program.
6. Dr. Butler, Executive Director, Air Force Materiel Command.
7. Ms. Young, Assistant Deputy Chief of Staff for Logistics, Installations & Mission Support.
8. Mr. Exley, Auditor General, Army Audit Agency.
9. Ms. McKay, Director, Defense Finance and Accounting Service.
10. Mr. Williams, Principle Deputy Director for Air Force Studies & Analyses, Assessments & Lessons Learned.
11. Dr. Meink, Director, Signals Intelligence Systems, National Reconnaissance Office.
12. Mr. Murphy, Director, Intelligence Development, Intelligence Systems Support Office.
13. Mr. Cluck, Director for Acquisitions, U.S. Special Operations Command.

Additionally, all career status Air Force Tier 3 SES members not included in the above list are eligible to serve on the 2012 Performance Review Board and are hereby nominated for inclusion on an ad hoc basis in the event of absence(s).

FOR FURTHER INFORMATION CONTACT: Please direct any written comments or requests for information to Ms. Erin Moore, Deputy Director, Senior Executive Management, AF/DPS, 1040 Air Force Pentagon, Washington, DC 20330–1040 (PH: 703–695–7677; or via email at *erin.moore@pentagon.af.mil*.).

Tommy W. Lee,

Acting Air Force Federal Register Liaison Officer, DAF.

[FR Doc. 2012–17566 Filed 7–18–12; 8:45 am]

BILLING CODE 5001–10–P

DEPARTMENT OF DEFENSE

Department of the Army; Corps of Engineers

Intent To Prepare an Integrated Water Supply Storage Reallocation Report; Environmental Impact Statement for Missouri River Municipal and Industrial (M & I) Reallocation and Hold Public Meetings

AGENCY: Department of the Army, U.S. Army Corps of Engineers, DoD.

ACTION: Notice of intent.

SUMMARY: Pursuant to the National Environmental Policy Act of 1969 (NEPA), as amended and the 1958 Water Supply Act, as amended, the U.S. Army Corps of Engineers (USACE), Omaha District, intends to prepare an integrated Municipal and Industrial (M&I) Water Supply Storage Reallocation Report and Environmental Impact Statement (EIS) for the Missouri River. The purpose of the study is to determine if changes to the current allocation of storage for M&I water supply may be warranted, and what the effects of making those changes would be on other authorized project purposes. If found to be feasible, storage could be allocated for purposes specific to M&I water supply storage, allowing for non-federal entities to acquire the rights to storage on a long-term or permanent basis via water supply contracts with the Corps of Engineers.

FOR FURTHER INFORMATION CONTACT: For additional information on the NEPA process, or to be added to the mailing list, contact Eric Laux, by mail: CENWO–PM–AC, U.S. Army Corps of Engineers, 1616 Capitol Avenue, Omaha, NE 68102, or by telephone: (402) 995–2682. For additional information on the Reallocation Study, contact Gwyn Jarrett, by mail: CENWO–PM–AA, U.S. Army Corps of Engineers, 1616 Capitol Avenue, Omaha, NE 68102, or by telephone: (402) 995–2717.

SUPPLEMENTARY INFORMATION:

Geographic Area. The study area will encompass the six mainstem reservoirs and river proper from the headwaters of Fort Peck Reservoir, Ft. Peck, MT to St. Louis, MO.

Project Scope. The demand for M&I water has increased in recent years and the Corps has received numerous requests for intakes and permission to withdraw water as a result of this demand. The Corps of Engineers is pursuing this study to evaluate the long-term Missouri River main stem water storage reallocation need in order to respond to the current and future water supply needs.

The 1944 Flood Control Act, as amended, directed the USACE to allocate the river's resources among the authorized Missouri River project purposes; which are: fish and wildlife, flood control, irrigation, navigation, hydropower, recreation, water quality, and water supply. Although water supply is one of the several purposes of the Missouri River main stem projects, no specific allocation of storage has been made for M&I. The Water Supply Act of 1958 provides the Assistant Secretary of the Army for Civil Works (ASA[CW]) the discretion to make a change in the use of storage in an existing reservoir project from its present use to M&I water supply (reallocation) and allows the secretary to enter into agreements for long term or permanent storage at Corps reservoir projects.

While water rights are conveyed by the state, the rights to water supply storage in a Corps reservoir may be acquired by non-federal entities on a long-term or permanent basis via a water supply contract with the Corps of Engineers. The cost of acquiring the right to storage would be based on the ASA (CW)'s determination of appropriate costs to be borne by the non-federal entities, as would be spelled out in the Decision Document that would result from the study.

The Reallocation Study will take a comprehensive, systems approach to evaluate present and future M&I storage needs along the Missouri River from the headwaters of Ft. Peck, MT to St. Louis, MO. In contemplating an allocation of storage to M&I to meet needs in the basin, the Reallocation Report/EIS will discuss and evaluate the following: (1) Identify current and future water demand and potential need for reallocated storage to support demand; (2) evaluate the impacts on the project purposes and existing users and whether or not compensation would be required; (3) determine environmental effects of any proposed action and whether or not mitigation would be required; (4) determine the price to be charged the purchasers of reallocated storage; and (5) determine appropriate compensation, if any, to existing users/beneficiaries. In addition to reallocation

alternatives, other alternative sources of water supply will also be evaluated and compared to the use of Missouri River storage.

Scoping and agency meetings. Public concerns on issues, studies needed, alternatives to be examined, procedures and other related matters will be addressed during scoping. This process will be the key to preparing a concise EIS and clarifying the significant issues to be analyzed in depth. Public meetings are scheduled as follows:

August 20, 2012—Nebraska City, NE: Lied Lodge and Conference Center, 2700 Sylvan Road.

August 21, 2012—St. Joseph, MO: Stoney Creek Inn and Conference Center, 1201 North Woodbine Road.

August 22, 2012—St. Louis, MO: Marriott West, 660 Maryville Centre Drive.

August 23, 2012—Sioux City, IA: Holiday Inn, 701 Gordon Drive.

August 27, 2012—Pierre, SD: Best Western Ramkota, 920 W. Sioux Avenue.

August 28, 2012—Bismarck, ND: Best Western Doublewood Inn and Conference Center, 1400 E Interchange Avenue.

August 29, 2012—Glasgow, MT: Fort Peck Visitor Center, Highway 24 South 17 miles to Fort Peck.

Dated: July 11, 2012.

Gwyn Jarrett,

Project Manager.

[FR Doc. 2012–17591 Filed 7–18–12; 8:45 am]

BILLING CODE 3720–58–P

DEPARTMENT OF DEFENSE

Department of the Army; Corps of Engineers

Intent To Prepare a Draft Environmental Impact Statement To Reduce Avian Predation on Juvenile Salmonids Through Management of Double-Crested Cormorants in the Columbia River Estuary

AGENCY: Department of the Army, U.S. Army Corps of Engineers, Department of Defense.

ACTION: Notice of intent.

SUMMARY: The U.S. Army Corps of Engineers, Portland District (Corps), intends to prepare a Draft Environmental Impact Statement (DEIS) to reduce avian predation on juvenile salmonids through management of double-crested cormorants (*Phalacrocorax auritus;* hereafter, cormorant used alone refers to double-crested cormorant) in the Columbia River Estuary (CRE). Recent increases in the number of cormorants nesting in the CRE has led to concerns over their potential impact on the recovery of federally-listed threatened and endangered Columbia River basin salmonids (*Oncorhynchus* spp.; i.e., salmon and steelhead). In 2010 and 2011, the cormorant colony at East Sand Island (ESI) in the CRE consumed about 19.2 and 22.6 million out-migrating juvenile salmonids, which equates to about 18 percent of the entire out-migrating salmon for those years. A portion of the salmonids consumed are listed under the Endangered Species Act (ESA). Managing cormorants to reduce predation on salmonids would complement other recovery efforts to address the threats that caused these fish to be listed under the ESA and would contribute to the overall recovery of listed salmonids in the Columbia River basin.

DATES: The Corps expects to release the DEIS for public review and comment in the fall of 2013.

FOR FURTHER INFORMATION CONTACT: Ms. Sondra Ruckwardt, Project Manager, U.S. Army Corps of Engineers, Portland District, P.O. Box 2946, Portland, OR 97208, by phone at 503–808–4691 or by email at: *sondra.k.ruckwardt@usace.army.mil.*

SUPPLEMENTARY INFORMATION: The Corps will prepare a DEIS to reduce avian predation on juvenile salmonids through management of cormorants in the CRE.

The U.S. Army Corps of Engineers responsibilities for cormorant management are identified under Public Law 106–53, Section 582c ''(1) NESTING AVIAN PREDATORS—In conjunction with the Secretary of Commerce and the Secretary of the Interior, and consistent with a management plan to be developed by the United States Fish and Wildlife Service, the Secretary [of the Army] shall carry out methods to reduce nesting populations of avian predators on dredge spoil islands in the Columbia River under the jurisdiction of the Secretary.''

The Corps is currently preparing a draft management plan that will include effective alternatives to reduce salmonid consumption by cormorants at ESI. The management plan is necessary to implement avian predation management actions provided for in the 2008 Federal Columbia River Power System (FCRPS) Biological Opinion (BiOp) (NOAA Fisheries 2008), the Reasonable and Prudent Alternative included in the 2008 BiOp and the 2010 FCRPS Supplemental BiOp (NOAA Fisheries 2010) to facilitate achievement of adult escapement goals identified for ESA-listed salmonids in the Columbia Basin.

The increase in consumption of juvenile salmonids by cormorants is the result of an unprecedented increase of cormorants on ESI where the number of breeding pairs increased by 1,400 percent between 1989 and 2007. Reducing cormorant predation in the CRE, in combination with other initiatives that aim to improve juvenile salmonid survival, is anticipated to increase population growth rates of ESA-listed salmonids in the Columbia River basin.

The Corps will evaluate alternatives for their ability to reduce cormorant predation on ESA-listed Columbia River salmonids in the CRE. The preliminary range of alternatives will include, but are not limited to reducing the ESI colony by 25 percent, by 50 percent and by 75 percent by a variety of methods. Some of these methods may include dissuasion techniques, habitat alterations and lethal removal. Also, per the National Environmental Policy Act regulations the Corps will also analyze a No Action alternative (status quo). Preliminary analyses of the benefits of reducing bird numbers with the preliminary action alternatives indicate increases in population growth rates for three of the thirteen ESA-listed salmonids by 0.5 to 1.5 percent. Any additional alternatives will be developed through public involvement and best available scientific information.

Scoping Process: a. The Corps invites affected Federal, State, local agencies, Native American tribes and other interested organizations and individuals to participate in the development of the DEIS. The Corps anticipates conducting public scoping meetings for the DEIS in late summer of 2012 although the exact date, time and location of these meeting have not been determined yet. Once meeting arrangements have been made, the Corps will publicize this information. The Corps will provide notice to the public of additional opportunities for public input on the EIS during review periods for the draft and final EIS.

b. Significant issues to be analyzed in the DEIS include, but are not limited to: avian predation of juvenile salmonids, management of the largest double-crested cormorant colony in the Western Region, potential impacts to fisheries outside the CRE, potential impacts to commercial and recreational fisheries and potential impacts to tribal fisheries.

c. The Corps will serve as the lead Federal agency in preparation of the DEIS. A decision will be made during the scoping process whether other

agencies and/or tribes will serve in an official role as cooperating agencies.

Dated: July 5, 2012.

John W. Eisenhauer,

Colonel, Corps of Engineers, District Commander.

[FR Doc. 2012–17598 Filed 7–18–12; 8:45 am]

BILLING CODE 3720–58–P

DEPARTMENT OF DEFENSE

Department of the Army, Corps of Engineers

Intent To Prepare a Draft Environmental Impact Statement for the Proposed Panoche Valley Solar Farm in San Benito County, CA, Corps Permit Application Number SPN–2009–00443S

AGENCY: Department of the Army, U.S. Army Corps of Engineers, DoD.

ACTION: Notice of intent.

SUMMARY: The U.S. Army Corps of Engineers, San Francisco District (Corps) received a Department of the Army permit application to construct a solar photovoltaic energy plant in San Benito County, CA. The original permit application was received in April 2010 and an updated application was received in August 2010. The application was submitted by Solargen Energy, Incorporated and has since been assumed by Panoche Valley Solar LLC (Applicant). The Corps, as the lead agency responsible for compliance with the National Environmental Policy Act (NEPA), determined that the proposed project may result in significant impacts on the environment, and that the preparation of an Environmental Impact Statement (EIS) is required. The U.S. Fish and Wildlife Service is a cooperating agency for this action. The Corps may invite other Federal, State, local agencies, and tribes to be cooperating agencies.

ADDRESSES: Comments may be submitted electronically or by U.S. Mail. Written comments should be addressed to: Ms. Katerina Galacatos, U.S. Army Corps of Engineers, San Francisco District, Attn: Regulatory Division; 1455 Market Street, 16th Floor, San Francisco, CA 94103–1398. Comments may also be submitted electronically via email to: *spn.eis.panoche@usace.army.mil.* Please refer to identification number SPN–2009–00443S in all correspondence.

FOR FURTHER INFORMATION CONTACT: To obtain additional information about this EIS, the public scoping process, or to receive a copy of the draft EIS when it is issued, please contact Ms. Katerina Galacatos by telephone: 415–503–6778; or electronic mail: *spn.eis.panoche@usace.army.mil.* Requests to be placed on the project mailing list may also be submitted by these means.

SUPPLEMENTARY INFORMATION: The applicant has submitted an application for a Department of Army permit pursuant to Section 404 of the Clean Water Act to construct and operate a 399–Megawatt$_{AC}$ (MWAC) solar photovoltaic (PV) energy generating facility known as the Panoche Valley Solar Farm (the Project). The Project would be located on private lands in San Benito County, CA. The 4,885-acre (7.6-square-mile) project site is approximately three-quarters of a mile north of the intersection of Panoche Road and Little Panoche Road, approximately 30 miles south of Los Banos and 60 miles west of Fresno. The project site is bordered by rangeland to the north and south, by the Gabilan Range to the west, and by the Panoche Hills to the east. The site elevation ranges from approximately 1,250 feet above mean sea level near the southeast end of the project to approximately 1,400 feet above mean sea level near the west end. Panoche Creek and Las Aguilas Creek flow through the project site. In addition, there are several stock ponds and stream segments in the northern portion of the project site. During the past forty years the project site has been used for grazing. Previously, crop production occurred over much of the project site.

The proposed project would be constructed in five phases and would include a substation, on-site access roads, and buried electrical collection conduit. The construction of three of the road crossings would result in 427 cubic yards of fill into Panoche Creek and Las Aguilas Creek, jurisdictional waters of the U.S. Electricity generated from the project would be transmitted on-site to the state's electrical grid through two existing Pacific Gas and Electric Company (PG&E) transmission lines.

Approximately 2,203 acres would be permanently disturbed by on-site facilities, and an additional 100 acres would be temporarily disturbed during construction. The proposed project would include development of the following components: Installation of approximately 3 million to 4 million photovoltaic panels; photovoltaic module steel support structures; electrical inverters and transformers; an electrical substation with switchyard; buried electrical collection conduit; an operations and maintenance (O&M) building; a septic system and leach field; a wastewater treatment facility and demineralization pond; on-site access roads; security fencing; and transmission support towers and line(s) to interconnect with the PG&E transmission lines that pass through the project site.

The EIS will include an evaluation of a reasonable range of alternatives. Currently, the following alternatives are expected to be analyzed in detail: The no action alternative (no permit issued), and the Applicant's proposed project (proposed action). In addition to the proposed action, the Corps may consider additional alternatives for potential detailed analysis.

Potentially significant issues to be analyzed in the EIS include, but are not limited to, impacts on biological resources (including threatened and endangered species), water resources (including wetlands), cultural resources, traffic and transportation, and air quality.

Other environmental review and consultation requirements for the proposed action include water quality certification pursuant to Section 401 of the Clean Water Act from the California Regional Water Quality Control Board; Section 7 consultation pursuant to the Endangered Species Act; and Section 106 consultation pursuant to the National Historic Preservation Act.

Scoping and Public Comment: All interested members of the public, including native communities and federally recognized Native American Tribes; federal, state, and local agencies; interest groups; and interested individuals, are invited to participate in the scoping process for the preparation of this EIS. Written comments identifying environmental issues, concerns, and opportunities to be analyzed in the EIS will be accepted for 30 days following publication of this Notice of Intent in the **Federal Register**.

The Corps will hold two public scoping meetings for the EIS. Notice of these meetings will be provided in local news media and on the project Web site (*http://www.spn.usace.army.mil/regulatory/actionsofinterest.html*) at least 15 days prior to the date of the meeting. Members of the public and representatives of organizations and Federal, state, local, and tribal agencies are invited to attend. Interested parties may provide oral and written comments at the meetings.

Jane M. Hicks,

Chief, Regulatory Division, San Francisco District.

[FR Doc. 2012–17595 Filed 7–18–12; 8:45 am]

BILLING CODE 3720–58–P

DEPARTMENT OF DEFENSE

Department of the Army; Corps of Engineers

Notice of Availability of the Draft Feasibility Study; Environmental Impact Statement for the Chatfield Reservoir Storage Reallocation, Littleton, CO

AGENCY: Department of the Army, U.S. Army Corps of Engineers, DoD.

ACTION: Notice of availability.

SUMMARY: In accordance with the National Environmental Policy Act of 1969, as amended, the U.S. Army Corps of Engineers has prepared a Draft Feasibility Report/Environmental Impact Statement (FR/EIS) for the Chatfield Reservoir Storage Reallocation Study, Littleton, Colorado and by this notice is announcing the extension of the comment period.

DATES: The comment period has been extended for an additional 30 days and will end on September 6, 2012.

ADDRESSES: Written comments should be sent to: Department of the Army; Corps of Engineers, Omaha District; CENWO–PM–AA; ATTN: Chatfield Reservoir Storage Reallocation FR/EIS; 1616 Capitol Avenue; Omaha, NE 68102–4901. Comments can also be emailed to: *mailto:Gwyn.M.Jarrett@usace.army.mil chatfieldstudy@usace.army.milmailto:Gwyn.M.Jarrett@usace.army.mil.* Comments on the Draft FR/EIS for the Chatfield Reservoir Storage Reallocation Study must be postmarked, emailed, or otherwise submitted no later than September 6, 2012.

FOR FURTHER INFORMATION CONTACT: For further information and/or questions about the Chatfield Reservoir Storage Reallocation FR/EIS, please contact Ms. Gwyn Jarrett, Project Manager, by telephone: (402) 995–2717, by mail: 1616 Capitol Avenue, Omaha, NE 68102–4901, or by email: *chatfieldstudy@usace.army.mil mailto:Gwyn.M.Jarrett@usace.army.mil.* For inquiries from the media, please contact the USACE Omaha District Public Affairs Officer (PAO), Ms. Monique Farmer by telephone (402) 995–2416, by mail: 1616 Capitol Avenue, Omaha, NE., 68102–4901, or by email: *Monique.l.Farmer@usace.army.mil.*

For more information about the Chatfield Reservoir Storage Reallocation FR/EIS, please visit *http://www.nwo.usace.army.mil/html/pd-p/Plan_Formulation/GI/GI_Chatfield.html.*

Dated: July 11, 2012.

Gwyn Jarrett,

Project Manager.

[FR Doc. 2012–17587 Filed 7–18–12; 8:45 am]

BILLING CODE 3720–58–P

DEPARTMENT OF EDUCATION

Notice of Submission for OMB Review; Office of Postsecondary Education; Application for Gaining Early Awareness and Readiness for Undergraduate Programs (GEAR UP) College Savings Account Research Demonstration Project

SUMMARY: GEAR UP is a discretionary grant program which encourages applicants to provide support and maintain a commitment to eligible low-income students, including students with disabilities, to assist the students in obtaining a secondary school diploma and preparing for and succeeding in postsecondary education. This GEAR UP project is designed to determine the effectiveness of pairing federally supported college savings accounts with GEAR UP activities as part of an overall college access and success strategy.

DATES: Interested persons are invited to submit comments on or before August 20, 2012.

ADDRESSES: Written comments regarding burden and/or the collection activity requirements should be electronically mailed to *ICDocketMgr@ed.gov* or mailed to U.S. Department of Education, 400 Maryland Avenue SW., LBJ, Washington, DC 20202–4537. Copies of the proposed information collection request may be accessed from *http://edicsweb.ed.gov,* by selecting the ''Browse Pending Collections'' link and by clicking on link number 04894. When you access the information collection, click on ''Download Attachments'' to view. Written requests for information should be addressed to U.S. Department of Education, 400 Maryland Avenue SW., LBJ, Washington, DC 20202–4537. Requests may also be electronically mailed to *ICDocketMgr@ed.gov* or faxed to 202–401–0920. Please specify the complete title of the information collection and OMB Control Number when making your request.

Individuals who use a telecommunications device for the deaf (TDD) may call the Federal Information Relay Service (FIRS) at 1–800–877–8339.

SUPPLEMENTARY INFORMATION: Section 3506 of the Paperwork Reduction Act of 1995 (44 U.S.C. Chapter 35) requires that Federal agencies provide interested parties an early opportunity to comment on information collection requests. The Director, Information Collection Clearance Division, Privacy, Information and Records Management Services, Office of Management, publishes this notice containing proposed information collection requests at the beginning of the Departmental review of the information collection. The Department of Education is especially interested in public comment addressing the following issues: (1) Is this collection necessary to the proper functions of the Department; (2) will this information be processed and used in a timely manner; (3) is the estimate of burden accurate; (4) how might the Department enhance the quality, utility, and clarity of the information to be collected; and (5) how might the Department minimize the burden of this collection on the respondents, including through the use of information technology. Please note that written comments received in response to this notice will be considered public records.

Title of Collection: Application for Gaining Early Awareness and Readiness for Undergraduate Programs (GEAR UP) College Savings Account Research Demonstration Project.

OMB Control Number: 1840–0821.

Type of Review: Revision.

Total Estimated Number of Annual Responses: 571.

Total Estimated Number of Annual Burden Hours: 30,590.

Abstract: Current State GEAR UP grantees that received new awards in Fiscal Year (FY) 2011 or FY 2012, that select participating students beginning not later than seventh grade using the cohort approach and that have their cohort of students entering the ninth grade in the 2013–2014 or 2014–2015 academic year are eligible to apply for funding. The purpose of this revision is to introduce the GEAR UP college savings account research demonstration project. The burden increase associated with the collection results from a program change to run this one-time college savings account demonstration project. This collection will results in a change of 26 respondents and an increase of 130 burden hours.

This collection is being submitted under the Streamlined Clearance Process for Discretionary Grant Information Collections (1894–0001). Therefore, the 30-day public comment period notice will be the only public comment notice published for this information collection.

Dated: July 16, 2012.

Darrin A. King,

Director, Information Collection Clearance Division, Privacy, Information and Records Management Services, Office of Management.

[FR Doc. 2012–17662 Filed 7–18–12; 8:45 am]

BILLING CODE 4000–01–P

DEPARTMENT OF EDUCATION

Advisory Committee on Student Financial Assistance: Meeting

AGENCY: Advisory Committee on Student Financial Assistance, Education

ACTION: Notice of open teleconference meeting.

SUMMARY: This notice sets forth the schedule and proposed agenda of a forthcoming open teleconference meeting of the Advisory Committee on Student Financial Assistance. This notice also describes the functions of the Advisory Committee. Notice of this meeting is required under Section 10(a)(2) of the Federal Advisory Committee Act. This document is intended to notify the general public of their opportunity to attend.

DATES: *Date and Time:* Monday, August 6, 2012, beginning at 2:00 p.m. and ending at approximately 3:00 p.m. (EST).

ADDRESSES: Office of the Advisory Committee on Student Financial Assistance, Capitol Place, 80 F Street NW., Room 412, Washington, DC 20202–7582.

FOR FURTHER INFORMATION CONTACT: Dr. William J. Goggin, Executive Director, Advisory Committee on Student Financial Assistance, Capitol Place, 80 F Street NW., Suite 413, Washington, DC 20202–7582, (202) 219–2099.

SUPPLEMENTARY INFORMATION: The Advisory Committee on Student Financial Assistance is established under Section 491 of the Higher Education Act of 1965 as amended by Public Law 100–50 (20 U.S.C. 1098). The Advisory Committee serves as an independent source of advice and counsel to the Congress and the Secretary of Education on student financial aid policy. Since its inception, the congressional mandate requires the Advisory Committee to conduct objective, nonpartisan, and independent analyses on important aspects of the student assistance programs under Title IV of the Higher Education Act. In addition, Congress expanded the Advisory Committee's mission in the Higher Education Opportunity Act of 2008 to include several important areas: access, Title IV modernization, early information and needs assessment and review and analysis of regulations. Specifically, the Advisory Committee is to review, monitor and evaluate the Department of Education's progress in these areas and report recommended improvements to Congress and the Secretary.

The Advisory Committee has scheduled this teleconference for the sole purpose of electing officers to serve a one-year term beginning October 1, 2012.

Space for the teleconference meeting is limited and you are encouraged to register early if you plan to attend. You may register by sending an email to the following email address: *tracy.deanna.jones@ed.gov*. Please include your name, title, affiliation, complete address (including internet and email, if available), and telephone and fax numbers. If you are unable to register electronically, you may fax your registration information to the Advisory Committee staff office at (202) 219–3032. You may also contact the Advisory Committee staff directly at (202) 219–2099. The registration deadline is Thursday, August 2, 2012.

Individuals who will need accommodations for a disability in order to attend the teleconference meeting (i.e., interpreting services, assistive listening devices, and/or materials in alternative format) should notify the Advisory Committee no later than Wednesday, August 1, 2012 by contacting Ms. Tracy Jones at (202) 219–2099 or via email at *tracy.deanna.jones@ed.gov*. We will attempt to meet requests after this date, but cannot guarantee availability of the requested accommodation. The teleconference site is accessible to individuals with disabilities.

Individuals who use a telecommunications device for the deaf (TTY) may call the Federal Information Relay Service (FRS) toll free at 1–800–877–8339.

Records are kept for Advisory Committee proceedings, and are available for inspection at the Office of the Advisory Committee on Student Financial Assistance, Capitol Place, 80 F Street NW., Suite 413, Washington, DC from the hours of 9:00 a.m. to 5:30 p.m. Eastern Standard Time, Monday through Friday, except Federal holidays. Information regarding the Advisory Committee is available on the Committee's Web site, *www.ed.gov/ACSFA*.

Dated: July 11, 2012.

William J. Goggin,

Executive Director, Advisory Committee on Student Financial Assistance.

[FR Doc. 2012–17543 Filed 7–18–12; 8:45 am]

BILLING CODE 4000–01–P

DEPARTMENT OF ENERGY

Federal Energy Regulatory Commission

Notice of Commission Staff Attendance

The Federal Energy Regulatory Commission hereby gives notice that members of the Commission's staff may attend the following meetings and/or teleconferences related to the transmission planning activities of the Southwest Power Pool, Inc. (SPP):

SPP Strategic Planning Committee

July 19, 2012, 8:00 a.m.–3:00 p.m.

The above-referenced meeting will be held at: Marriot Country Club Plaza, 4445 Main Street, Kansas City, MO 64111.

The above-referenced meeting and teleconference are open to stakeholders.

Further information may be found at *www.spp.org*.

The discussions at the meetings and teleconferences described above may address matters at issue in the following proceedings:

Docket No. ER09–35–001, *Tallgrass Transmission, LLC*

Docket No. ER09–36–001, *Prairie Wind Transmission, LLC*

Docket No. ER09–548–001, *ITC Great Plains, LLC*

Docket No. ER11–4105–000, *Southwest Power Pool, Inc.*

Docket No. EL11–34–001, *Midwest Independent Transmission System Operator, Inc.*

Docket No. ER12–1179–000, *Southwest Power Pool, Inc.*

Docket No. ER12–1415–000, *Southwest Power Pool, Inc.*

Docket No. ER12–1460–000, *Southwest Power Pool, Inc.*

Docket No. ER12–1610–000, *Southwest Power Pool, Inc.*

Docket No. ER12–1772–000, *Southwest Power Pool, Inc.*

For more information, contact Luciano Lima, Office of Energy Markets Regulation, Federal Energy Regulatory Commission at (202) 502–6210 or *luciano.lima@ferc.gov*.

Dated: July 13, 2012.

Nathaniel J. Davis, Sr.,

Deputy Secretary.

[FR Doc. 2012–17585 Filed 7–18–12; 8:45 am]

BILLING CODE 6717–01–P

ENVIRONMENTAL PROTECTION AGENCY

[FRL–9701–4]

Announcement of the Board of Trustees for the National Environmental Education Foundation

AGENCY: Environmental Protection Agency; Office of External Affairs and Environmental Education.

ACTION: Notice.

SUMMARY: The National Environmental Education Foundation (NEEF) was created by Section 10 of Public Law 101–619, the National Environmental Education Act of 1990. It is a private 501(c)(3) non-profit organization established to promote and support education and training as necessary tools to further environmental protection and sustainable, environmentally sound development. It provides the common ground upon which leaders from business and industry, all levels of government, public interest groups, and others can work cooperatively to expand the reach of environmental education and training programs beyond the traditional classroom. The Foundation supports a grant program that promotes innovative environmental education and training programs; it also develops partnerships with government and other organizations to administer projects that promote the development of an environmentally literate public. The Administrator of the U.S. Environmental Protection Agency, as required by the terms of the Act, announces the following appointment to the National Environmental Education Foundation Board of Trustees. The appointee is Wonya Lucas, Chief Executive Officer and President of TV One, LLC.

FOR FURTHER INFORMATION CONTACT: For information regarding this Notice of Appointment, please contact Mrs. Stephanie Owens, Deputy Associate Administrator, Office of External Affairs and Environmental Education (1701A) U.S. EPA, 1200 Pennsylvania Ave. NW., Washington, DC 20460. General information concerning NEEF can be found on their Web site at: *http://www.neefusa.org.*

SUPPLEMENTARY INFORMATION:

Additional Considerations: Great care has been taken to assure that this new appointee not only has the highest degree of expertise and commitment, but also brings to the Board diverse points of view relating to environmental education. This appointment is a four-year term which may be renewed once for an additional four years pending successful re-election by the NEEF nominating committee.

This appointee will join the current Board members which include:

- Decker Anstrom, Former CEO, The Weather Channel Companies
- JL Armstrong (NEEF Vice Chair), National Manger, Toyota Motor Sales, USA, Inc.
- Raymond Ban, Executive Vice President, The Weather Channel
- Holly Cannon, Principal, Beveridge and Diamond, P.C.
- Phillipe Cousteau, Co-Founder and CEO, EarthEcho International
- Manuel Alberto Diaz, Partner, Lydecker Diaz, L.L.P.
- Arthur Gibson (NEEF Chair), Vice President, Environment, Health and Safety, Baxter Healthcare Corporation
- Kenneth Olden, Chairman, Avon Foundation Scientific Advisory Board
- Trish Silber, President, Aliniad Consulting Partners, Inc.
- Bradley Smith, Dean, Huxley College of the Environment, Western Washington University
- Kenneth Strassner (NEEF Treasurer), Vice President, Global Environment, Safety, Regulatory and Scientific Affairs, Kimberly-Clark Corporation
- Diane Wood (NEEF Secretary), President, National Environmental Education Foundation

Background: Section 10(a) of the National Environmental Education Act of 1990 mandates a National Environmental Education Foundation. The Foundation is established in order to extend the contribution of environmental education and training to meeting critical environmental protection needs, both in this country and internationally; to facilitate the cooperation, coordination, and contribution of public and private resources to create an environmentally advanced educational system; and to foster an open and effective partnership among Federal, State, and local government, business, industry, academic institutions, community based environmental groups, and international organizations.

The Foundation is a charitable and nonprofit corporation whose income is exempt from tax, and donations to which are tax deductible to the same extent as those organizations listed pursuant to section 501(c) of the Internal Revenue Code of 1986. The Foundation is not an agency or establishment of the United States. The purposes of the Foundation are—

(A) Subject to the limitation contained in the final sentence of subsection (d) herein, to encourage, accept, leverage, and administer private gifts for the benefit of, or in connection with, the environmental education and training activities and services of the United States Environmental Protection Agency;

(B) To conduct such other environmental education activities as will further the development of an environmentally conscious and responsible public, a well-trained and environmentally literate workforce, and an environmentally advanced educational system;

(C) To participate with foreign entities and individuals in the conduct and coordination of activities that will further opportunities for environmental education and training to address environmental issues and problems involving the United States and Canada or Mexico.

The Foundation develops, supports, and/or operates programs and projects to educate and train educational and environmental professionals, and to assist them in the development and delivery of environmental education and training programs and studies.

The Foundation has a governing Board of Directors (hereafter referred to in this section as 'the Board'), which consists of 13 directors, each of whom shall be knowledgeable or experienced in the environment, education and/or training. The Board oversees the activities of the Foundation and assures that the activities of the Foundation are consistent with the environmental and education goals and policies of the Environmental Protection Agency and with the intents and purposes of the Act. The membership of the Board, to the extent practicable, represents diverse points of view relating to environmental education and training. Members of the Board are appointed by the Administrator of the Environmental Protection Agency.

Within 90 days of the date of the enactment of the National Environmental Education Act, and as appropriate thereafter, the Administrator will publish in the **Federal Register** an announcement of appointments of Directors of the Board. Such appointments become final and effective 90 days after publication in the **Federal Register**. The directors are appointed for terms of 4 years. The term may be renewed once for an additional four years, pending successful re-election by the NEEF nominating committee. The Administrator shall appoint an individual to serve as a director in the event of a vacancy on the Board within 60 days of said vacancy in the manner in which the original appointment was made. No individual

may serve more than 2 consecutive terms as a director.

Dated: June 28, 2012.

Lisa P. Jackson,

Administrator.

Wonya Lucas

Ms. Wonya Y. Lucas has been Chief Executive Officer and President of TV One, LLC since August 08, 2011. Ms. Lucas was most recently Executive Vice President of Discovery Channel, Chief Operating Officer of Discovery Channel, Executive Vice President of Science Channel and Chief Operating Officer of Science Channel at Discovery Communications Holding, LLC since June 2010. She served as Chief Marketing Officer of Discovery Communications Holding, LLC from March 24, 2008 to June 2010.

Prior to joining Discovery Communications in 2008, Lucas served as General Manager and Executive Vice President of The Weather Channel Networks, where she was responsible for corporate strategy and development, strategic marketing for The Weather Channel and weather.com, and operations and programming for The Weather Channel, The Weather Channel HD, Weatherscan, The Weather Channel Radio Network, and newspaper syndication.

Before joining The Weather Channel in 2002 as Executive Vice President of Marketing, Lucas held several positions at Turner Broadcasting System, including Senior Vice President of Strategic Marketing for CNN Networks and Vice President of Business Operations and Network Development for TBS, TNT, Turner Classic Movies and Turner South. Her other experience includes brand management for The Coca-Cola Company and The Clorox Company.

In 2010, Lucas was named among the ''75 Most Powerful Women in Business'' by Black Enterprise magazine. Previous honors include listing among the 2009 ''Leading Women in Business'' and ''Leading Minorities in Business'' by Cablefax Daily, recognition as a ''Woman To Watch'' by Women in Cable Telecommunications, a Brand Builders Award at the 2006 Promax & BDA Conference, recognition as a ''Women To Watch'' in the 2005 Wonder Women of Cable TV Awards, and the Inspiration Award for ''Woman of the Year'' in the WICT–Atlanta's 2007 Red Letter Awards. Lucas serves on the Board of Directors of the Cable & Telecommunications Association for Marketing and she was the co-chairperson for the 2007 CTAM Summit. She also has served as a board member for WICT, Inc. and is a graduate of the Betsy Magness Leadership Institute.

Ms. Lucas earned a master's degree in business administration from the University of Pennsylvania's Wharton School of Business and a bachelor's degree in Industrial Engineering from Georgia Institute of Technology.

[FR Doc. 2012–17661 Filed 7–18–12; 8:45 am]

BILLING CODE 6560–50–P

ENVIRONMENTAL PROTECTION AGENCY

[Petition IV–2010–9; FRL–9700–9]

Clean Air Act Operating Permit Program; Petition for Objection to State Operating Permit for Kentucky Syngas, LLC; Muhlenberg County, KY

AGENCY: Environmental Protection Agency (EPA).

ACTION: Notice of final order on petition to object to a state operating permit.

SUMMARY: Pursuant to Clean Air Act (CAA) the EPA Administrator signed an Order, dated June 22, 2012, partially granting and partially denying a petition to object to a CAA merged prevention of significant deterioration and title V operating permit issued by the Kentucky Division for Air Quality (KDAQ) to Kentucky Syngas, LLC (KSG) for its facility located near Central City in Muhlenberg County, Kentucky. This Order constitutes a final action on the petition submitted by Environmental Policy & Law Center on behalf of Sierra Club and Valley Watch (Petitioners) and received by EPA on October 27, 2010. A petition for judicial review of those parts of the Order that deny issues in the petition may be filed in the United States Court of Appeals for the appropriate circuit within 60 days from the date this notice is published in the **Federal Register**.

DATES: September 17, 2012.

ADDRESSES: Copies of the Order, the petition, and all pertinent information relating thereto are on file at the following location: EPA Region 4; Air, Pesticides and Toxics Management Division; 61 Forsyth Street SW.; Atlanta, Georgia 30303–8960. The Order is also available electronically at the following address: *http://www.epa.gov/region07/air/title5/petitiondb/petitions/kentuckysyngas_response2010.pdf.*

FOR FURTHER INFORMATION CONTACT: Art Hofmeister, Air Permits Section, EPA Region 4, at (404) 562–9115 or *hofmeister.art@epa.gov.*

SUPPLEMENTARY INFORMATION: The CAA affords EPA a 45-day period to review and, as appropriate, the authority to object to operating permits proposed by state permitting authorities under title V of the CAA, 42 U.S.C. 7661–7661f. Section 505(b)(2) of the CAA and 40 CFR 70.8(d) authorize any person to petition the EPA Administrator to object to a title V operating permit within 60 days after the expiration of EPA's 45-day review period if EPA has not objected on its own initiative. Petitions must be based only on objections to the permit that were raised with reasonable specificity during the public comment period provided by the state, unless the petitioner demonstrates that it was impracticable to raise these issues during the comment period or the grounds for the issues arose after this period.

Petitioners submitted a petition regarding KSG (received by EPA on October 27, 2010), requesting that EPA object to the CAA title V operating permit (#V–09–001). Petitioners alleged that the permit was not consistent with the CAA because: (1) KDAQ failed to provide an opportunity for meaningful public participation; (2) KDAQ failed to consider and respond to comments on alternatives; (3) KDAQ's decision to permit the KSG facility and the Thoroughbred Mine separately was arbitrary and capricious; (4) the best available control technology (BACT) analyses omitted consideration of clean fuels and processes; (5) emissions estimates from the flare and BACT for the flare were in error; (6) the permit failed to meet certain requirements for hazardous air pollutants; (7) KDAQ failed to accurately account for all emissions of volatile organic compounds in the potential-to-emit calculation; (8) the permit's monitoring requirements for a variety of different units and pollutants were inadequate; (9) KSG failed to accurately estimate, sufficiently control and adequately model particulate matter; (10) KDAQ failed to demonstrate that the proposed facility will not cause or contribute to violations of the ozone national ambient air quality standard; and (11) the permit lacked the necessary $PM_{2.5}$ limit.

On June 22, 2012, the Administrator issued an Order partially granting and partially denying the petition. The Order explains EPA's rationale for partially granting and partially denying the petition.

Dated: July 6, 2012.

A. Stanley Meiburg,

Deputy Regional Administrator. Region 4.

[FR Doc. 2012–17632 Filed 7–18–12; 8:45 am]

BILLING CODE 6560–50–P

ENVIRONMENTAL PROTECTION AGENCY

[Petition IV–2010–4; FRL–9701–1]

Clean Air Act Operating Permit Program; Petition for Objection to State Operating Permit for Cash Creek Generation, LLC—Cash Creek Generation Station; Henderson County, KY

AGENCY: Environmental Protection Agency (EPA).

ACTION: Notice of final order on petition to object to a state operating permit.

SUMMARY: Pursuant to Clean Air Act (CAA), the EPA Administrator signed an Order, dated June 22, 2012, partially granting and partially denying a petition to object to a CAA merged prevention of significant deterioration and title V operating permit issued by the Kentucky Division for Air Quality (KDAQ) to Cash Creek Generation, LLC for its Cash Creek Generation Station (Cash Creek) located near Owensboro in Henderson County, Kentucky. This Order constitutes a final action on the petition submitted by Environmental Policy & Law Center on behalf of Sierra Club, Ursuline Sisters of Saint Joseph, and Valley Watch (Petitioners) and received by EPA on June 18, 2010. A petition for judicial review of those parts of the Order that deny issues in the petition may be filed in the United States Court of Appeals for the appropriate circuit within 60 days from the date this notice is published in the **Federal Register**.

DATES: September 17, 2012.

ADDRESSES: Copies of the Order, the petition, and all pertinent information relating thereto are on file at the following location: EPA Region 4; Air, Pesticides and Toxics Management Division; 61 Forsyth Street, SW; Atlanta, Georgia 30303–8960. The Order is also available electronically at the following address: *http://www.epa.gov/region07/air/title5/petitiondb/petitions/cashcreek_response2010.pdf.*

FOR FURTHER INFORMATION CONTACT: Art Hofmeister, Air Permits Section, EPA Region 4, at (404) 562–9115 or *hofmeister.art@epa.gov.*

SUPPLEMENTARY INFORMATION: The CAA affords EPA a 45-day period to review and, as appropriate, the authority to object to operating permits proposed by state permitting authorities under title V of the CAA, 42 U.S.C. 7661–7661f. Section 505(b)(2) of the CAA and 40 CFR 70.8(d) authorize any person to petition the EPA Administrator to object to a title V operating permit within 60 days after the expiration of EPA's 45-day review period if EPA has not objected on its own initiative. Petitions must be based only on objections to the permit that were raised with reasonable specificity during the public comment period provided by the state, unless the petitioner demonstrates that it was impracticable to raise these issues during the comment period or the grounds for the issues arose after this period.

Petitioners submitted a petition regarding Cash Creek (received by EPA on June 18, 2010), requesting that EPA object to the CAA title V operating permit (#V–09–006). Petitioners alleged that the permit was not consistent with the CAA because: (1) KDAQ failed to provide an opportunity for meaningful public participation; (2) KDAQ's calculation of the proposed facility's potential to emit volatile organic compounds (VOC), hydrogen sulfide and hazardous air pollutants (HAP) failed to account for full emissions from active flaring; (3) the permit's source-wide VOC emission limit was not enforceable as a practical matter; (4) the best available control technology (BACT) limits applicable to the flare during startup and steady-state operations were not supported by a proper BACT analysis; (5) the BACT limits applicable to the flare did not cover shutdown and malfunction periods; (6) the applicant incorrectly estimated fugitive emissions from equipment leaks; (7) KDAQ omitted numerous control options and relied on a faulty cost-effectiveness analysis in selecting BACT for equipment leaks; (8) KDAQ improperly determined that the source was minor for HAPs; (9) Cash Creek's calculation of particulate matter emissions from material handling assumed an unreasonably high control efficiency for wet suppression control methods and used an unreasonably low silt loading factor; (10) permit terms and conditions governing material handling were unenforceably vague and did not equate to the assumed control efficiencies; and (11) Cash Creek failed to perform an adequate ozone impacts analysis.

On June 22, 2012, the Administrator issued an Order partially granting and partially denying the petition. The Order explains EPA's rationale for partially granting and partially denying the petition.

Dated: July 6, 2012.

A. Stanley Meiburg,

Deputy Regional Administrator, Region 4.

[FR Doc. 2012–17635 Filed 7–18–12; 8:45 am]

BILLING CODE 6560–50–P

ENVIRONMENTAL PROTECTION AGENCY

[FRL–9699–9]

Proposed Consent Decree Relating to the New Source Performance Standards for Municipal Solid Waste Landfills

AGENCY: Environmental Protection Agency (EPA).

ACTION: Notice of proposed consent decree; request for public comment.

SUMMARY: In accordance with of the Clean Air Act, as amended (''Act''), notice is hereby given of a proposed consent decree to settle an action in the United States District Court for the Southern District of New York (Environmental Defense Fund v. Jackson, Case No. 11 Civ. 04492 (KBF) ECF Case) alleging that EPA failed to perform its obligations under the Act as they relate to the new source performance standards (''NSPS'') for municipal solid waste landfills (''MSW Landfills''). The Act requires EPA to review, and if appropriate, revise NSPS not later than 8 years after their promulgation unless EPA determines that such review is not appropriate in light of readily available information on the efficacy of the standard. Under the terms of the proposed consent decree, EPA agrees that: (1) By May 1, 2013, EPA shall: (i) Perform an appropriate review and sign for publication one or a combination of the following: (A) a proposed rule containing revisions to the MSW Landfills NSPS; or (B) a proposed determination not to revise the MSW Landfills NSPS; or (ii) sign for publication a determination that review is not appropriate; and, (2) if EPA signs a proposed rule or a proposed determination, then no later than May 1, 2014, sign one or a combination of the following: (i) A final rule containing revisions to the MSW Landfills NSPS, based on appropriate review; or, (ii) a final determination not to revise the MSW Landfills NSPS, based on an appropriate review.

DATES: Written comments on the proposed consent decree must be received by August 20, 2012.

ADDRESSES: Submit your comments, identified by Docket ID number EPA–HQ–OGC–2012–0490, online at *www.regulations.gov* (EPA's preferred method); by email to *oei.docket@epa.gov;* by mail to EPA Docket Center, Environmental Protection Agency, Mailcode: 2822T, 1200 Pennsylvania Ave. NW., Washington, DC 20460–0001; or by hand delivery or courier to EPA Docket

Center, EPA West, Room 3334, 1301 Constitution Ave. NW., Washington, DC, between 8:30 a.m. and 4:30 p.m. Monday through Friday, excluding legal holidays. Comments on a disk or CD–ROM should be formatted in Word or ASCII file, avoiding the use of special characters and any form of encryption, and may be mailed to the mailing address above.

FOR FURTHER INFORMATION CONTACT: Richard H. Vetter, Air and Radiation Law Office, Office of General Counsel, U.S. Environmental Protection Agency, at Office of Air Quality Planning and Standards, Sector Policies and Program Division (D205–01) 109 T.W. Alexander Drive, Research Triangle Park, NC 27711; telephone: (919) 541–2127; fax number (919) 541–4991; email address: *vetter.rick@epa.gov.*

SUPPLEMENTARY INFORMATION:

I. Additional Information About the Proposed Settlement Agreement

This proposed consent decree would potentially resolve a law suit filed in the U.S. District Court for the Southern District of New York by the Environmental Defense Fund EDF). EDF alleges that EPA failed to perform its obligations under section 111(b)(1)(B) of the Act, 42 U.S.C. 7411(b)(1)(B), as they relate to the new source performance standards (''NSPS'') for municipal solid waste landfills (''MSW Landfills''), 40 CFR part 60, subpart WWW (40 CFR 60.750—60.759). Section 111(b)(1)(B) of the Act requires EPA to review, and if appropriate, revise NSPS not later than 8 years after their promulgation unless EPA determines that such review is not appropriate in light of readily available information on the efficacy of the standard. Under the terms of the proposed consent decree, EPA agrees that: (1) By May 1, 2013, EPA shall: (i) Perform an appropriate review and sign for publication one or a combination of the following: (A) a proposed rule containing revisions to NSPS Subpart WWW; or (B) a proposed determination not to revise NSPS Subpart WWW; or (ii) sign for publication a determination that review is not appropriate; and, (2) if EPA signs a proposed rule or a proposed determination, then no later than May 1, 2014, sign one or a combination of the following: (i) A final rule containing revisions to NSPS Subpart WWW, based on appropriate review; or, (ii) a final determination not to revise Subpart WWW, based on an appropriate review.

For a period of thirty (30) days following the date of publication of this notice, the Agency will accept written comments relating to the proposed consent decree from persons who were not named as parties or intervenors to the litigation in question. EPA or the Department of Justice may withdraw or withhold consent to the proposed consent decree if the comments disclose facts or considerations that indicate that such consent is inappropriate, improper, inadequate, or inconsistent with the requirements of the Act. Unless EPA or the Department of Justice determines, based on any comment submitted, that consent to this proposed consent decree should be withdrawn, the terms of the consent decree will be affirmed and the consent decree will be submitted for entry by the court.

II. Additional Information About Commenting on the Proposed Consent Decree

A. How can I get a copy of the consent decree?

The official public docket for this action (identified by Docket ID No. EPA–HQ–OGC–2012–0490) contains a copy of the proposed consent decree. The official public docket is available for public viewing at the Office of Environmental Information (OEI) Docket in the EPA Docket Center, EPA West, Room 3334, 1301 Constitution Ave. NW., Washington, DC. The EPA Docket Center Public Reading Room is open from 8:30 a.m. to 4:30 p.m., Monday through Friday, excluding legal holidays. The telephone number for the Public Reading Room is (202) 566–1744, and the telephone number for the OEI Docket is (202) 566–1752.

An electronic version of the public docket is available through *www.regulations.gov.* You may use the *www.regulations.gov* to submit or view public comments, access the index listing of the contents of the official public docket, and to access those documents in the public docket that are available electronically. Once in the system, key in the appropriate docket identification number then select ''search''.

It is important to note that EPA's policy is that public comments, whether submitted electronically or in paper, will be made available for public viewing online at *www.regulations.gov* without change, unless the comment contains copyrighted material, CBI, or other information whose disclosure is restricted by statute. Information claimed as CBI and other information whose disclosure is restricted by statute is not included in the official public docket or in the electronic public docket. EPA's policy is that copyrighted material, including copyrighted material contained in a public comment, will not be placed in EPA's electronic public docket but will be available only in printed, paper form in the official public docket. Although not all docket materials may be available electronically, you may still access any of the publicly available docket materials through the EPA Docket Center.

B. How and to whom do I submit comments?

You may submit comments as provided in the **ADDRESSES** section. Please ensure that your comments are submitted within the specified comment period. Comments received after the close of the comment period will be marked ''late.'' EPA is not required to consider these late comments.

If you submit an electronic comment, EPA recommends that you include your name, mailing address, and an email address or other contact information in the body of your comment and with any disk or CD ROM you submit. This ensures that you can be identified as the submitter of the comment and allows EPA to contact you in case EPA cannot read your comment due to technical difficulties or needs further information on the substance of your comment. Any identifying or contact information provided in the body of a comment will be included as part of the comment that is placed in the official public docket, and made available in EPA's electronic public docket. If EPA cannot read your comment due to technical difficulties and cannot contact you for clarification, EPA may not be able to consider your comment.

Use of the *www.regulations.gov* Web site to submit comments to EPA electronically is EPA's preferred method for receiving comments. The electronic public docket system is an ''anonymous access'' system, which means EPA will not know your identity, email address, or other contact information unless you provide it in the body of your comment. In contrast to EPA's electronic public docket, EPA's electronic mail (email) system is not an ''anonymous access'' system. If you send an email comment directly to the Docket without going through *www.regulations.gov,* your email address is automatically captured and included as part of the comment that is placed in the official public docket, and made available in EPA's electronic public docket.

Dated: July 5, 2012.

Patricia A. Embrey,

Acting Associate General Counsel.

[FR Doc. 2012–17627 Filed 7–18–12; 8:45 am]

BILLING CODE 6560–50–P

ENVIRONMENTAL PROTECTION AGENCY

[EPA–HQ–OAR–2008–0699; FRL–9701–3]

Release of Draft Documents Related to the Review of the National Ambient Air Quality Standards for Ozone

AGENCY: Environmental Protection Agency (EPA).

ACTION: Availability of draft documents for public comment.

SUMMARY: On or about July 16, 2012, the Office of Air Quality Planning and Standards (OAQPS) of the EPA is making available for public comment two draft assessment documents titled, *Health Risk and Exposure Assessment for Ozone, First External Review Draft* and *Welfare Risk and Exposure Assessment for Ozone, First External Review Draft.* These two draft assessment documents describe the quantitative analyses the EPA is conducting as part of the review of the national ambient air quality standards (NAAQS) for ozone (O_3). In addition, on or about August 13, 2012, OAQPS will make available for public comment the first draft document titled, *Policy Assessment for the Review of the Ozone National Ambient Air Quality Standards, First External Review Draft,* as well as appendices and additional technical materials that support the first draft Policy Assessment and first draft Risk and Exposure Assessments.

DATES: Comments on all documents should be submitted on or before September 11, 2012.

ADDRESSES: Submit your comments, identified by Docket ID No. EPA–HQ–OAR–2008–0699, by one of the following methods:

- *www.regulations.gov*: Follow the on-line instructions for submitting comments.
- *Email:* Comments may be sent by electronic mail (email) to *a-and-r-docket@epa.gov*, Attention Docket ID No. EPA–HQ–OAR–2008–0699.
- *Fax:* Fax your comments to 202–566–9744, Attention Docket ID. No. EPA–HQ–OAR–2008–0699.
- *Mail:* Send your comments to: Air and Radiation Docket and Information Center, Environmental Protection Agency, Mailcode: 2822T, 1200 Pennsylvania Ave. NW., Washington, DC 20460, Attention Docket ID No. EPA–HQ–OAR–2008–0699.
- *Hand Delivery or Courier:* Deliver your comments to: EPA Docket Center, 1301 Constitution Ave. NW., Room 3334, Washington, DC. Such deliveries are only accepted during the Docket's normal hours of operation, and special arrangements should be made for deliveries of boxed information.

Instructions: Direct your comments to Docket ID No. EPA–HQ–OAR–2008–0699. The EPA's policy is that all comments received will be included in the public docket without change and may be made available online at *www.regulations.gov,* including any personal information provided, unless the comment includes information claimed to be Confidential Business Information (CBI) or other information whose disclosure is restricted by statute. Do not submit information that you consider to be CBI or otherwise protected through *www.regulations.gov* or email. The *www.regulations.gov* Web site is an ''anonymous access'' system, which means the EPA will not know your identity or contact information unless you provide it in the body of your comment. If you send an email comment directly to the EPA without going through *www.regulations.gov,* your email address will be captured automatically and included as part of the comment that is placed in the public docket and made available on the Internet. If you submit an electronic comment, the EPA recommends that you include your name and other contact information in the body of your comment and with any disk or CD–ROM you submit. If the EPA cannot read your comment due to technical difficulties and cannot contact you for clarification, the EPA may not be able to consider your comment. Electronic files should avoid the use of special characters, any form of encryption, and be free of any defects or viruses.

Docket: All documents in the docket are listed in the *www.regulations.gov* index. Although listed in the index, some information is not publicly available, e.g., CBI or other information whose disclosure is restricted by statute. Certain other material, such as copyrighted material, will be publicly available only in hard copy. Publicly available docket materials are available either electronically in *www.regulations.gov* or in hard copy at the Air Docket in the EPA Docket Center, EPA West, Room 3334, 1301 Constitution Ave. NW., Washington, DC. This Docket Facility is open from 8:30 a.m. to 4:30 p.m. Monday through Friday, excluding legal holidays. The Docket telephone number is 202–566–1742; fax 202–566–9744.

FOR FURTHER INFORMATION CONTACT: For questions related to the draft document titled, *Health Risk and Exposure Assessment for Ozone, First External Review Draft* (EPA–452/P–12–001; July 2012), please contact Ms. Karen Wesson, Office of Air Quality Planning and Standards (Mail code C504–02), U.S. Environmental Protection Agency, Research Triangle Park, NC 27711; email: *wesson.karen@epa.gov;* telephone: 919–541–3515; fax: 919–541–5315.

For questions related to the draft document titled, *Welfare Risk and Exposure Assessment for Ozone, First External Review Draft* (EPA–452/P–12–004; July 2012), please contact Dr. Travis Smith, Office of Air Quality Planning and Standards (Mail code C539–07), U.S. Environmental Protection Agency, Research Triangle Park, NC 27711; email: *smith.jtravis@epa.gov*; telephone: 919–541–2035; fax: 919–541–5315.

For questions related to the draft document titled, *Policy Assessment for the Review of the Ozone National Ambient Air Quality Standards: First External Review Draft* (EPA–452/P–12–002; August 2012), please contact Ms. Susan Lyon Stone, Office of Air Quality Planning and Standards (Mail code C504–06), U.S. Environmental Protection Agency, Research Triangle Park, NC 27711; email: *stone.susan@epa.gov*; telephone: 919–541–1146; fax: 919–541–0237.

General Information

A. What should I consider as I prepare my comments for the EPA?

1. *Submitting CBI.* Do not submit this information to the EPA through *www.regulations.gov* or email. Clearly mark the part or all of the information that you claim to be CBI. For CBI information in a disk or CD–ROM that you mail to the EPA, mark the outside of the disk or CD–ROM as CBI and then identify electronically within the disk or CD–ROM the specific information that is claimed as CBI. In addition to one complete version of the comment that includes information claimed as CBI, a copy of the comment that does not contain the information claimed as CBI must be submitted for inclusion in the public docket. Information so marked will not be disclosed except in accordance with procedures set forth in 40 CFR part 2.

2. *Tips for Preparing Your Comments.* When submitting comments, remember to:

- Identify the rulemaking by docket number and other identifying information (subject heading, **Federal Register** date and page number).
- Follow directions—The agency may ask you to respond to specific questions or organize comments by referencing a Code of Federal Regulations (CFR) part or section number.

- Explain why you agree or disagree; suggest alternatives and substitute language for your requested changes.
- Describe any assumptions and provide any technical information and/or data that you used.
- If you estimate potential costs or burdens, explain how you arrived at your estimate in sufficient detail to allow for it to be reproduced.
- Provide specific examples to illustrate your concerns, and suggest alternatives.
- Make sure to submit your comments by the comment period deadline identified.

SUPPLEMENTARY INFORMATION: Under section 108(a) of the Clean Air Act (CAA), the Administrator identifies and lists certain pollutants which ''cause or contribute to air pollution which may reasonably be anticipated to endanger public health or welfare.'' The EPA then issues air quality criteria for these listed pollutants, which are commonly referred to as ''criteria pollutants.'' The air quality criteria are to ''accurately reflect the latest scientific knowledge useful in indicating the kind and extent of all identifiable effects on public health or welfare which may be expected from the presence of [a] pollutant in the ambient air, in varying quantities.'' Under section 109 of the CAA, the EPA establishes primary (health-based) and secondary (welfare-based) NAAQS for pollutants for which air quality criteria are issued. Section 109(d) of the CAA requires periodic review and, if appropriate, revision of existing air quality criteria. The revised air quality criteria reflect advances in scientific knowledge on the effects of the pollutant on public health or welfare. The EPA is also required to periodically review and, if appropriate, revise the NAAQS based on the revised air quality criteria.

Air quality criteria and NAAQS have been established for O_3 to provide protection of public health and welfare from O_3 and other photochemical oxidants. Presently, the EPA is reviewing the air quality criteria and NAAQS for O_3. The EPA's overall plan and schedule for this review is presented in the *Integrated Review Plan for the Ozone National Ambient Air Quality Standards.*[1] A draft of the integrated review plan was released for public review and comment in September 2009 and was the subject of a consultation with the Clean Air Scientific Advisory Committee (CASAC) on November 13, 2009 (74 FR 54562; October 22, 2009).[2] Comments received from that consultation and from the public were considered in finalizing the plan and in beginning the review of the air quality criteria.

As part of the EPA's review of the primary and secondary O_3 NAAQS,[3] the Agency is conducting quantitative assessments characterizing the: (1) Health risks associated with exposure to ambient O_3; (2) welfare risks associated with exposure to ambient O_3; and, (3) associated ambient air quality analyses. On or about July 16, 2012, the EPA is making available for public comment two draft assessment documents titled, *Health Risk and Exposure Assessment for Ozone, First External Review Draft* and *Welfare Risk and Exposure Assessment for Ozone, First External Review Draft.* These draft assessments may be accessed online through the EPA's TTN Web site at *http://www.epa.gov/ttn/naaqs/standards/ozone/s_o3_index.html.*

The EPA's plans for conducting these assessments, including the proposed scope and methods of the analyses, were presented in two planning documents titled, *Ozone National Ambient Air Quality Standards: Scope and Methods Plan for Health Risk and Exposure Assessment* and *Ozone National Ambient Air Quality Standards: Scope and Methods Plan for Welfare Risk and Exposure Assessment* (henceforth, Scope and Methods Plans).[4] These documents were released for public comment in April 2011, and were the subject of a consultation with the CASAC on May 19–20, 2011 (76 FR 23809; April 28, 2011). In May 2012, a memo titled, *Updates to information presented in the Scope and Methods Plans for the Ozone NAAQS Health and Welfare Risk and Exposure Assessments,* was made available that described changes to elements of the scope and methods plans and provided a brief explanation of each change and the reason for it.

The draft assessment documents announced today convey the approaches taken to assess exposures to ambient O_3 and to characterize associated health and welfare risks, as well as present the initial key results, observations, and related uncertainties associated with the quantitative analyses performed.

In addition, on or about August 13, 2012, the EPA will make available the first draft document titled *Policy Assessment for the Review of the Ozone National Ambient Air Quality Standards, First External Review Draft.* This document will serve to ''bridge the gap'' between the scientific information and the judgments required of the Administrator in determining whether it is appropriate to retain or revise the standards. The Policy Assessment will build upon information presented in the *Integrated Science Assessment of Ozone and Related Photochemical Oxidants* (Third draft)[5] and the two draft assessment documents described above. At the same time, the EPA will make available appendices and additional technical materials that support the first draft Policy Assessment and first draft Risk and Exposure Assessments. The first draft Policy Assessment, appendices, and additional technical materials may be accessed online through EPA's TTN Web site at *http://www.epa.gov/ttn/naaqs/standards/ozone/s_o3_index.html.*

The EPA is soliciting advice and recommendations from the CASAC by means of a review of these three draft documents at an upcoming public meeting of the CASAC that will be held in September 2012. Information about these public meetings, including the dates and locations, will be published as a separate notice in the **Federal Register**. Following the CASAC meeting, the EPA will consider comments received from the CASAC and the public in preparing revisions to these documents.

The draft documents briefly described above do not represent and should not be construed to represent any final EPA policy, viewpoint, or determination. The EPA will consider any public comments submitted in response to this notice when revising the documents.

Dated: July 11, 2012.

Mary Henigin,

Acting Director, Office of Air Quality Planning and Standards.

[FR Doc. 2012–17626 Filed 7–18–12; 8:45 am]

BILLING CODE 6560–50–P

[1] EPA 452/R–11–006; April 2011; Available: *http://www.epa.gov/ttn/naaqs/standards/ozone/data/2011_04_OzoneIRP.pdf.*

[2] See *http://yosemite.epa.gov/sab/sabproduct.nsf/WebProjectsbyTopicCASAC!OpenView* for more information on CASAC activities related to the current O_3 NAAQS review.

[3] See *http://www.epa.gov/ttn/naaqs/review.html* for more information on the NAAQS review process.

[4] EPA–452/P–11–001 and -002; April 2011; Available: *http://www.epa.gov/ttn/naaqs/standards/ozone/s_o3_2008_pd.html.*

[5] U.S. EPA. Integrated Science Assessment of Ozone and Related Photochemical Oxidants (Third External Review Draft). U.S. Environmental Protection Agency, Washington, DC, EPA/600/R–10/076C, 2012; Available: *http://cfpub.epa.gov/ncea/isa/recordisplay.cfm?deid=242490#Download.*

FEDERAL COMMUNICATIONS COMMISSION

Information Collection Being Reviewed by the Federal Communications Commission Under Delegated Authority

AGENCY: Federal Communications Commission.

ACTION: Notice; request for comments.

SUMMARY: As part of its continuing effort to reduce paperwork burden and as required by the Paperwork Reduction Act (PRA) of 1995 (44 U.S.C. 3501—3520), the Federal Communications Commission invites the general public and other Federal agencies to take this opportunity to comment on the following information collection(s). Comments are requested concerning: Whether the proposed collection of information is necessary for the proper performance of the functions of the Commission, including whether the information shall have practical utility; the accuracy of the Commission's burden estimate; ways to enhance the quality, utility, and clarity of the information collected; ways to minimize the burden of the collection of information on the respondents, including the use of automated collection techniques or other forms of information technology; and ways to further reduce the information burden for small business concerns with fewer than 25 employees.

The FCC may not conduct or sponsor a collection of information unless it displays a currently valid OMB control number. No person shall be subject to any penalty for failing to comply with a collection of information subject to the Paperwork Reduction Act (PRA) that does not display a valid OMB control number.

DATES: Written Paperwork Reduction Act (PRA) comments should be submitted on or before September 17, 2012. If you anticipate that you will be submitting PRA comments, but find it difficult to do so within the period of time allowed by this notice, you should advise the FCC contact listed below as soon as possible.

ADDRESSES: Submit your PRA comments to Nicholas A. Fraser, Office of Management and Budget, via fax at 202–395–5167 or via Internet at *Nicholas_A._Fraser@omb.eop.gov* and to Judith B.Herman, Federal Communications Commission, via the Internet at *Judith-b.herman@fcc.gov.* To submit your PRA comments by email send them to: *PRA@fcc.gov.*

FOR FURTHER INFORMATION CONTACT: Judith B. Herman, Office of Managing Director, (202) 418–0214.

SUPPLEMENTARY INFORMATION:

OMB Control Number: 3060–0600.

Title: Application to Participate in a FCC Auction.

Form Number: FCC Form 175.

Type of Review: Extension of a currently approved collection.

Respondents: Business or other for-profit entities, not-for-profit institutions and state, local or tribal government.

Number of Respondents: 500 respondents; 500 responses.

Estimated Time per Response: 1.5 hours.

Frequency of Response: On occasion reporting requirements and third party disclosure requirement.

Obligation to Respond: Required to obtain or retain benefits. Statutory authority for this information collection is contained in 47 U.S.C. 4(i) and 309(j)(5) of the Communications Act of 1934, as amended.

Total Annual Burden: 750 hours.

Total Annual Cost: N/A.

Privacy Impact Assessment: N/A.

Nature and Extent of Confidentiality: The Commission is not requesting respondents to submit confidential information to the FCC. If the applicants wish to submit information which they believe is confidential, they may request confidential treatment of such information under 47 CFR 0.459 of the Commission's rules.

Needs and Uses: The Commission is seeking an extension of this information collection in order to obtain the full three year approval from OMB. There is no change to the reporting requirement.

The information collected will be used by the Commission to determine if the applicant is legally, technically, and financially qualified to participate in a FCC auction. In addition, if the applicant applies for status as a particular type of auction participant pursuant to the Commission's rules, the Commission will use the information to determine if the applicant is eligible for the status requested.

The Commission's auction rules and requirements are designed to ensure that the competitive bidding process is limited to serious qualified applicants; to deter possible abuse of the bidding and licensing processes; and to enhance the use of competitive bidding to assign Commission licenses in furtherance of the public interest. The Commission uses additional information collected from applicants claiming eligibility for small business benefits to ensure that only legitimate small businesses reap the benefits of the Commission's designated entity program. Over the last decade, the Commission has engaged in numerous rulemakings and adjudicatory investigations to prevent companies from circumventing the objectives of the designated entity eligibility rules. The Commission uses this form for all upcoming auctions.

Federal Communications Commission.

Marlene H. Dortch,

Secretary, Office of the Secretary, Office of Managing Director.

[FR Doc. 2012–17517 Filed 7–18–12; 8:45 am]

BILLING CODE 6712–01–P

FEDERAL COMMUNICATIONS COMMISSION

Information Collection(s) Being Submitted for Review and Approval to the Office of Management and Budget (OMB)

AGENCY: Federal Communications Commission.

ACTION: Notice; request for comments.

SUMMARY: As part of its continuing effort to reduce paperwork burden and as required by the Paperwork Reduction Act (PRA) of 1995 (44 U.S.C. 3502–3520), the Federal Communications Commission invites the general public and other Federal agencies to take this opportunity to comment on the following information collection(s). Comments are requested concerning: Whether the proposed collection of information is necessary for the proper performance of the functions of the Commission, including whether the information shall have practical utility; the accuracy of the Commission's burden estimates; ways to enhance the quality, utility, and clarity of the information collected; ways to minimize the burden of the collection of information on the respondents, including the use of automated collection techniques or other forms of information technology; and ways to further reduce the information collection burden on small business concerns with fewer than 25 employees.

The FCC may not conduct or sponsor a collection of information unless it displays a currently valid OMB control number. No person shall be subject to any penalty for failing to comply with a collection of information subject to the Paperwork Reduction Act (PRA) that does not display a valid OMB control number.

DATES: Written Paperwork Reduction Act (PRA) comments should be submitted on or before August 20, 2012. If you anticipate that you will be submitting PRA comments, but find it

difficult to do so within the period of time allowed by this notice, you should advise the FCC contact listed below as soon as possible.

ADDRESSES: Submit your PRA comments to Nicholas A. Fraser, Office of Management and Budget (OMB), via fax at 202–395–5167 or via Internet at *Nicholas_A._Fraser@omb.eop.gov <mailto:Nicholas_A._Fraser@omb.eop.gov>* and to Judith B. Herman, Federal Communications Commission, via the *Internet at Judith-b.herman@fcc.gov.* To submit your PRA comments by email send them to: *PRA@fcc.gov <mailto: PRA@fcc.gov>.*

FOR FURTHER INFORMATION CONTACT: Judith B. Herman, Office of Managing Director, FCC, at 202–418–0214.

SUPPLEMENTARY INFORMATION:

OMB Control Number: 3060–0484.

Title: Sections 4.1 and 4.2, Part 4 of the Commission's Rules Concerning Disruptions to Communications (NORS).

Form Number: N/A.

Type of Review: Revision of a currently approved collection.

Respondents: Business or other for-profit entities and not-for-profit institutions.

Number of Respondents: 118 respondents; 15,444 responses.

Estimated Time per Response: .25 hours to 2 hours.

Frequency of Response: On occasion and annual reporting requirements, recordkeeping requirement and third party disclosure requirement.

Obligation to Respond: Mandatory. Statutory authority for this information collection is contained in 47 U.S.C. 151, 152, 154(i)–(k), 154(o), 218, 219, 230, 256, 301, 302(a), 303(f), 303(g), 303(j), 303(r), 403, 615a, 621(b)(3), 621(d) and 1302(b) of the Communications Act of 1934, as amended; and section 1704 of the Omnibus Consolidated and Emergency Supplemental Appropriations Act of 1998, 44 U.S.C. 3504.

Total Annual Burden: 29,647 hours.

Total Annual Cost: N/A.

Privacy Impact Assessment: N/A.

Nature and Extent of Confidentiality: Outage reports filed pursuant to Part 4 of the Commission's rules are presumed confidential. The information in the filings may be shared with the Department of Homeland Security only under appropriate confidential disclosure provisions. Other persons seeking disclosure must follow the procedures delineated in 47 CFR 0.457 and 0.459 of the Commission's rules for requests for and disclosure of information.

Needs and Uses: The Commission will submit this revised information collection to the Office of Management and Budget (OMB) during this comment period to obtain the full, three year clearance from them. The Commission is reporting a 9,909 hour program change increase to the Commission's previous burden estimates. The increase in the burden is due to adoption of FCC 12–22, Report and Order, extending the Part 4 outage reporting requirements to interconnected Voice Over Internet Protocol (VoIP) which are new respondents subject to the requirements of this information collection.

Specifically, the Commission extended mandatory outage reporting rules to facilities-based and non-facilities based interconnected VoIP service providers and applied the current Part 4 definition of ''outage'' to outages of interconnected VoIP service, covering the complete loss of service and/or connectivity to customers at least 30 minutes duration that potentially affects at least 900,000 user minutes of interconnected VoIP services and results in complete loss of service; or potentially affects any special offices and facilities such as a 911 facility.

Collecting data on significant outages of interconnected VoIP services will help the Commission to monitor compliance with the statutory 911 obligations of interconnected VoIP service providers, as well as help ensure the Nation's current and future 911 systems are as reliable and resilient as possible both on a day-to-day basis and in times of a major emergency. The Commission recognizes that consumers are increasingly relying on Internet Protocol (IP)-based technologies as substitutes for communications services provided by older communications technologies, and increasingly use interconnected VoIP services in lieu of traditional telephone service. As of December 31, 2010, 31 percent of the more than 87 million residential telephone subscriptions in the United States were users of interconnected VoIP providers—an increase of 21 percent (from 22.4 million to 27.1 million) from the end of 2009. Additionally, the Commission estimates that approximately 31 percent of residential wireline 911 calls are made using VoIP service.

The information collected is administered by the FCC's Public Safety and Homeland Security Bureau (PSHSB) which maintains an Internet Web site portal for the electronic submission of he required outage reports. In addition, provision is made for the submission of required data by other than electronic means in cases where electronic submission is not feasible. In cases where specified offices and facilities (other than 911 offices and facilities) are submitted with 120 minutes of an outage to the Commission's duty officer (a post staffed 24 hours a day) in the FCC's Communications and Crisis Management Center in Washington, DC.

Federal Communications Commission.

Marlene H. Dortch,

Secretary, Office of the Secretary, Office of Managing Director.

[FR Doc. 2012–17520 Filed 7–18–12; 8:45 am]

BILLING CODE 6712–01–P

FEDERAL COMMUNICATIONS COMMISSION

Information Collection(s) Being Submitted for Review and Approval to the Office of Management and Budget (OMB)

AGENCY: Federal Communications Commission.

ACTION: Notice; request for comments.

SUMMARY: As part of its continuing effort to reduce paperwork burden and as required by the Paperwork Reduction Act (PRA) of 1995 (44 U.S.C. 3502–3520), the Federal Communications Commission invites the general public and other Federal agencies to take this opportunity to comment on the following information collection(s). Comments are requested concerning: Whether the proposed collection of information is necessary for the proper performance of the functions of the Commission, including whether the information shall have practical utility; the accuracy of the Commission's burden estimates; ways to enhance the quality, utility, and clarity of the information collected; ways to minimize the burden of the collection of information on the respondents, including the use of automated collection techniques or other forms of information technology; and ways to further reduce the information collection burden on small business concerns with fewer than 25 employees.

The FCC may not conduct or sponsor a collection of information unless it displays a currently valid OMB control number. No person shall be subject to any penalty for failing to comply with a collection of information subject to the Paperwork Reduction Act (PRA) that does not display a valid OMB control number.

DATES: Written Paperwork Reduction Act (PRA) comments should be submitted on or before August 20, 2012. If you anticipate that you will be submitting PRA comments, but find it difficult to do so within the period of time allowed by this notice, you should

advise the FCC contact listed below as soon as possible.

ADDRESSES: Submit your PRA comments to Nicholas A. Fraser, Office of Management and Budget (OMB), via fax at 202–395–5167 or via Internet at *Nicholas_A._Fraser@omb.eop.gov <mailto:Nicholas_A._Fraser@omb.eop.gov>* and to Judith B. Herman, Federal Communications Commission, via the Internet at *Judith-b.herman@fcc.gov.* To submit your PRA comments by email send them to: *PRA@fcc.gov <mailto:PRA@fcc.gov>.*

FOR FURTHER INFORMATION CONTACT: Judith B. Herman, Office of Managing Director, FCC, at 202–418–0214.

SUPPLEMENTARY INFORMATION:

OMB Control Number: 3060–0931.

Title: Section 80.103, Digital Selective Calling (DSC) Operating Procedures—Maritime Mobile Identity (MMSI).

Form Number: N/A.

Type of Review: Extension of a currently approved collection.

Respondents: Individuals or households; business or other for-profit entities and Federal Government.

Number of Respondents: 40,000 respondents; 40,000 responses.

Estimated Time per Response: .25 hours.

Frequency of Response: On occasion reporting requirement and third party disclosure requirement.

Obligation to Respond: Required to obtain or retain benefits. Statutory authority for this information collection is in 47 U.S.C. sections 154, 303, 307(e), 309 and 332 of the Communications Act of 1934, as amended. The reporting requirement is contained in international agreements and ITU–R M.541.9.

Total Annual Burden: 10,000 hours.

Total Annual Cost: N/A.

Privacy Impact Assessment: Yes. The FCC maintains a system of records notice (SORN), FCC/WTB–1, ''Wireless Services Licensing Records'' that covers the collection, purpose(s), storage, safeguards, and disposal of the PII that marine VHF radio licensees maintain under 47 CFR 80.103.

Nature and Extent of Confidentiality: There is a need for confidentiality with respect to all owners of Marine VHF radios with Digital Selective Calling (DSC) capability in this collection. The licensee records will be publicly available and routinely used in accordance with subsection (b) of the Privacy Act of 1974. FRN numbers and material which is afforded confidential treatment pursuant to a request made under 47 CFR 0.459 of the Commission's rules will not be available for public inspection. Any personally identifiable information (PII) that individual applicants provide is covered by a system of records, FCC/WTB–1, ''Wireless Services Licensing Records'', and these and all other records may be disclosed pursuant to the Routine Uses as stated in the SORN.

Needs and Uses: The Commission will submit this information collection to the Office of Management and Budget (OMB) during this comment period to obtain the full, three year clearance from them. The Commission is requesting an extension (no change in the reporting and/or third party disclosure requirements. There is no change in the Commission's previous burden estimates of 2009.

The information collected is necessary to require owners of marine VHF radios with Digital Selective Calling (DSC) capability to register information such as the name, address, type of vessel with a private entity issuing marine mobile service identities (MMSI). The information would be used by search and rescue personnel to identify vessels in distress and to select the proper rescue units and search methods. The requirement to collect this information is contained in international agreements with the U.S. Coast Guard and private sector entities that issue MMSI's.

The information is used by private entities to maintain a database used to provide information about the vessel owner in distress using marine VHF radios with DSC capability. If the data were not collected, the U.S. Coast Guard would not have access to this information which would increase the time and effort needed to complete a search and rescue operation.

Federal Communications Commission.

Marlene H. Dortch,

Secretary, Office of the Secretary, Office of Managing Director.

[FR Doc. 2012–17519 Filed 7–18–12; 8:45 am]

BILLING CODE 6712–01–P

DEPARTMENT OF HEALTH AND HUMAN SERVICES

[Document Identifier: OS–0990–New]
[60-day Notice]

Agency Information Collection Request; 60-Day Public Comment Request

AGENCY: Office of the Secretary, HHS.

ACTION: Notice.

In compliance with the requirement of section 3506(c)(2)(A) of the Paperwork Reduction Act of 1995, the Office of the Secretary (OS), Department of Health and Human Services, is publishing the following summary of a proposed information collection request for public comment. Interested persons are invited to send comments regarding this burden estimate or any other aspect of this collection of information, including any of the following subjects: (1) The necessity and utility of the proposed information collection for the proper performance of the agency's functions; (2) the accuracy of the estimated burden; (3) ways to enhance the quality, utility, and clarity of the information to be collected; and (4) the use of automated collection techniques or other forms of information technology to minimize the information collection burden.

To obtain copies of the supporting statement and any related forms for the proposed paperwork collections referenced above, email your request, including your address, phone number, OMB number, and OS document identifier, to *Sherette.funncoleman@hhs.gov*, or call the Reports Clearance Office on (202) 690–6162. Written comments and recommendations for the proposed information collections must be directed to the OS Paperwork Clearance Officer at the above email address within 60 days.

Proposed Project: – OS Think Cultural Health -OMB No. 0990–NEW- The Office of Minority Health (OMH)

Abstract: The Office of Minority Health (OMH), Office of the Secretary (OS), Department of Health and Human Services (DHHS) is requesting approval from OMB for the Think Cultural Health (TCH) Web site. The Web site is used to post information such as cultural competency, language access and health disparities articles, and notices of health disparities conferences for visitors to the site. The TCH Web site is unlike other government sites, in that it offers users the ability to gain cultural health competency credits through on-line training and resources in addition to offering users the option of receiving a newsletter.

It supports the Office of Minority Health within the Office of the Secretary of the Department of Health and Human Services (HHS/OS/OMH) in complying with the cultural competency requirements of the Patient Protection and Affordable Care Act of 2010 (ACA) (P.L.111–148), as well as the Secretary's Plan to Reduce Racial and Ethnic Health Disparities, the National Stakeholder Strategy for Achieving Health Equity, Healthy People 2020, the Secretary's Strategic Plan priorities, and the Assistant Secretary for Health's Public Health Quality agenda.

ESTIMATED ANNUALIZED BURDEN TABLE

Form name	Type of respondent	Number of respondents	Number of responses per respondent	Average burden per response (hours)	Total burden (hours)
Think Cultural Health Registration Form.	Physician	27477	1	3/60	1,373.85
	Nurse	44723	1	3/60	2,236.15
	Physician Assistant	1882	1	3/60	94.10
	Dentist	377	1	3/60	18.85
	Dental Professional	39	1	3/60	1.95
	Social Worker	1733	1	3/60	86.65
	Public Health	186	1	3/60	9.30
	General Healthcare Worker	12635	1	3/60	631.75
	Psychologist/Psychiatrist	189	1	3/60	9.45
	Mental Health Professional	180	1	3/60	9.00
	Pharmacist, RPH	750	1	3/60	37.50
	Emergency Medical Technician	492	1	3/60	24.60
	Administrator or Hospital Executive	151	1	3/60	7.55
	Policymaker or Public Official	17	1	3/60	0.85
	Teacher	424	1	3/60	21.20
	Lawyer	107	1	3/60	5.35
	Bachelors	3753	1	3/60	187.65
	Masters	4063	1	3/60	203.15
	Doctorate	1130	1	3/60	56.50
	Student	7504	1	3/60	375.20
	Other	10880	1	3/60	544.00
Total	118692	1	3/60	5,934.60	

Keith A. Tucker,

Office of the Secretary, Paperwork Reduction Act Clearance Officer.

[FR Doc. 2012–17489 Filed 7–18–12; 8:45 am]

BILLING CODE 4150–29–P

DEPARTMENT OF HEALTH AND HUMAN SERVICES

Designation of a Class of Employees for Addition to the Special Exposure Cohort; Correction

AGENCY: National Institute for Occupational Safety and Health (NIOSH), Centers for Disease Control and Prevention, Department of Health and Human Services (HHS).

ACTION: Notice; correction.

SUMMARY: HHS published a notice in the **Federal Register** (Volume 77, Number 130, Page 40059) on July 6, 2012 to give notice of a decision to designate a class of employees from the Feed Materials Production Center (FMPC) in Fernald, Ohio, also known as the Fernald Environmental Management Project (FEMP), as an addition to the Special Exposure Cohort (SEC) under the Energy Employees Occupational Illness Compensation Program Act of 2000. The designation was incorrect. Therefore, HHS has published this notice of correction. On June 27, 2012, the Secretary of HHS designated the following class of employees as an addition to the SEC:

All employees of DOE, its predecessor agencies, and their contractors, or subcontractors who worked at the Feed Materials Production Center (FMPC) in Fernald, Ohio, from January 1, 1968 through December 31, 1978, for a number of work days aggregating at least 250 work days, occurring either solely under this employment, or in combination with work days within the parameters established for one or more other classes of employees included in the Special Exposure Cohort.

The designation published in this notice of correction will become effective on July 27, 2012, unless Congress provides otherwise prior to the effective date. After this effective date, HHS will publish a notice in the **Federal Register** reporting the addition of this class to the SEC or the result of any provision by Congress regarding the decision by HHS to add the class to the SEC.

FOR FURTHER INFORMATION CONTACT: Stuart L. Hinnefeld, Director, Division of Compensation Analysis and Support, NIOSH, 4676 Columbia Parkway, MS C–46, Cincinnati, OH 45226, Telephone 1–877–222–7570. Information requests can also be submitted by email to *DCAS@CDC.GOV.*

John Howard,

Director, National Institute for Occupational Safety and Health.

[FR Doc. 2012–17569 Filed 7–18–12; 8:45 am]

BILLING CODE 4163–19–P

DEPARTMENT OF HEALTH AND HUMAN SERVICES

Food and Drug Administration

[Docket No. FDA–2011–N–0230]

Agency Information Collection Activities; Announcement of Office of Management and Budget Approval; Examination of Online Direct-to-Consumer Prescription Drug Promotion

AGENCY: Food and Drug Administration, HHS.

ACTION: Notice.

SUMMARY: The Food and Drug Administration (FDA) is announcing that a collection of information entitled ''Examination of Online Direct-to-Consumer Prescription Drug Promotion'' has been approved by the Office of Management and Budget (OMB) under the Paperwork Reduction Act of 1995.

FOR FURTHER INFORMATION CONTACT: Juanmanuel Vilela, Office of Information Management, Food and Drug Administration, 1350 Piccard Dr., PI50–400B, Rockville, MD 20850, 301–796–7651, *Juanmanuel.Vilela@fda.hhs.gov.*

SUPPLEMENTARY INFORMATION: On January 31, 2012, the Agency submitted a proposed collection of information entitled ''Examination of Online Direct-to-Consumer Prescription Drug

Promotion'' to OMB for review and clearance under 44 U.S.C. 3507. An Agency may not conduct or sponsor, and a person is not required to respond to, a collection of information unless it displays a currently valid OMB control number. OMB has now approved the information collection and has assigned OMB control number 0910–0714. The approval expires on July 31, 2015. A copy of the supporting statement for this information collection is available on the Internet at *http://www.reginfo.gov/public/do/PRAMain.*

Dated: July 12, 2012.

Leslie Kux,

Assistant Commissioner for Policy.

[FR Doc. 2012–17554 Filed 7–18–12; 8:45 am]

BILLING CODE 4160–01–P

DEPARTMENT OF HEALTH AND HUMAN SERVICES

Food and Drug Administration

[Docket No. FDA–2012–N–0248]

Agency Information Collection Activities; Submission for Office of Management and Budget Review; Comment Request; Guidance for Industry on Formal Dispute Resolution; Appeals Above the Division Level

AGENCY: Food and Drug Administration, HHS.

ACTION: Notice.

SUMMARY: The Food and Drug Administration (FDA) is announcing that a proposed collection of information has been submitted to the Office of Management and Budget (OMB) for review and clearance under the Paperwork Reduction Act of 1995.

DATES: Fax written comments on the collection of information by August 20, 2012.

ADDRESSES: To ensure that comments on the information collection are received, OMB recommends that written comments be faxed to the Office of Information and Regulatory Affairs, OMB, Attn: FDA Desk Officer, FAX: 202–395–7285, or emailed to *oira_submission@omb.eop.gov.* All comments should be identified with the OMB control number 0910–0430. Also include the FDA docket number found in brackets in the heading of this document.

FOR FURTHER INFORMATION CONTACT: Juanmanuel Vilela, Office of Information Management, Food and Drug Administration, 1350 Piccard Dr., PI50–400B, Rockville, MD 20850, 301–796–7651, *juanmanuel.vilela@fda.hhs.gov.*

SUPPLEMENTARY INFORMATION: In compliance with 44 U.S.C. 3507, FDA has submitted the following proposed collection of information to OMB for review and clearance.

Guidance for Industry on Formal Dispute Resolution; Appeals Above the Division Level—(OMB Control Number 0910–0430)—(Extension)

This information collection approval request is for FDA guidance on the process for formally resolving scientific and procedural disputes in the Center for Drug Evaluation and Research (CDER) and the Center for Biologics Evaluation and Research (CBER) that cannot be resolved at the division level. The guidance describes procedures for formally appealing such disputes to the office or center level and for submitting information to assist center officials in resolving the issue(s) presented. The guidance provides information on how the Agency will interpret and apply provisions of the existing regulations regarding internal Agency review of decisions (§ 10.75 (21 CFR 10.75)) and dispute resolution during the investigational new drug (IND) process (§ 312.48 (21 CFR 312.48)) and the new drug application/abbreviated new drug application (NDA/ANDA) process (§ 314.103 (21 CFR 314.103)). In addition, the guidance provides information on how the Agency will interpret and apply the specific Prescription Drug User Fee Act (PDUFA) goals for major dispute resolution associated with the development and review of PDUFA products.

Existing regulations, which appear primarily in 21 CFR parts 10, 312, and 314, establish procedures for the resolution of scientific and procedural disputes between interested persons and the Agency, CDER, and CBER. All Agency decisions on such matters are based on information in the administrative file (§ 10.75(d)). In general, the information in an administrative file is collected under existing regulations in part 312 (OMB control number 0910–0014), part 314 (OMB control number 0910–0001), and part 601 (21 CFR part 601) (OMB control number 0910–0338), which specify the information that manufacturers must submit so that FDA may properly evaluate the safety and effectiveness of drugs and biological products. This information is usually submitted as part of an IND, NDA, or biologics license application (BLA), or as a supplement to an approved application. While FDA already possesses in the administrative file the information that would form the basis of a decision on a matter in dispute resolution, the submission of particular information regarding the request itself and the data and information relied on by the requestor in the appeal would facilitate timely resolution of the dispute. The guidance describes the following collection of information not expressly specified under existing regulations: The submission of the request for dispute resolution as an amendment to the application for the underlying product, including the submission of supporting information with the request for dispute resolution.

Agency regulations (§§ 312.23(11)(d), 314.50, 314.94, and 601.2) state that information provided to the Agency as part of an IND, NDA, ANDA, or BLA is to be submitted in triplicate and with an appropriate cover form. Form FDA 1571 must accompany submissions under INDs and Form FDA 356h must accompany submissions under NDAs, ANDAs, and BLAs. Both forms have valid OMB control numbers as follows: FDA Form 1571—OMB control number 0910–0014, and FDA Form 356h—OMB control number 0910–0338.

In the guidance document, CDER and CBER ask that a request for formal dispute resolution be submitted as an amendment to the application for the underlying product and that it be submitted to the Agency in triplicate with the appropriate form attached, either Form FDA 1571 or Form FDA 356h. The Agency recommends that a request be submitted as an amendment in this manner for two reasons: To ensure that each request is kept in the administrative file with the entire underlying application and to ensure that pertinent information about the request is entered into the appropriate tracking databases. Use of the information in the Agency's tracking databases enables the appropriate Agency official to monitor progress on the resolution of the dispute and to ensure that appropriate steps will be taken in a timely manner.

CDER and CBER have determined and the guidance recommends that the following information should be submitted to the appropriate center with each request for dispute resolution so that the Center may quickly and efficiently respond to the request: (1) A brief but comprehensive statement of each issue to be resolved, including a description of the issue, the nature of the issue (i.e., scientific, procedural, or both), possible solutions based on information in the administrative file, whether informal dispute resolution

was sought prior to the formal appeal, whether advisory committee review is sought, and the expected outcome; (2) a statement identifying the review division/office that issued the original decision on the matter and, if applicable, the last Agency official that attempted to formally resolve the matter; (3) a list of documents in the administrative file, or additional copies of such documents, that are deemed necessary for resolution of the issue(s); and (4) a statement that the previous supervisory level has already had the opportunity to review all of the material relied on for dispute resolution. The information that the Agency suggests submitting with a formal request for dispute resolution consists of: (1) Statements describing the issue from the perspective of the person with a dispute, (2) brief statements describing the history of the matter, and (3) the documents previously submitted to FDA under an OMB approved collection of information.

Based on FDA's experience with dispute resolution, the Agency expects that most persons seeking formal dispute resolution will have gathered the materials listed previously when identifying the existence of a dispute with the Agency. Consequently, FDA anticipates that the collection of information attributed solely to the guidance will be minimal.

Description of respondents: A sponsor, applicant, or manufacturer of a drug or biological product regulated by the Agency under the Federal Food, Drug, and Cosmetic Act or section 351 of the Public Health Service Act (42 U.S.C. 262) (Pub. L. 99–660) who requests formal resolution of a scientific or procedural dispute.

Burden Estimate: Provided in this document is an estimate of the annual reporting burden for requests for dispute resolution. Based on data collected from review divisions and offices within CDER and CBER, FDA estimates that approximately nine sponsors and applicants (respondents) submit requests for formal dispute resolution to CDER annually and approximately one respondent submits requests for formal dispute resolution to CBER annually. The total annual responses are the total number of requests submitted to CDER and CBER in 1 year, including requests for dispute resolution that a single respondent submits more than one time. FDA estimates that CDER receives approximately 18 requests annually and CBER receives approximately 1 request annually. The hours per response is the estimated number of hours that a respondent would spend preparing the information to be submitted with a request for formal dispute resolution in accordance with this guidance, including the time it takes to gather and copy brief statements describing the issue from the perspective of the person with the dispute, brief statements describing the history of the matter, and supporting information that has already been submitted to the Agency. Based on experience, FDA estimates that approximately 8 hours on average would be needed per response. Therefore, FDA estimates that 152 hours will be spent per year by respondents requesting formal dispute resolution under the guidance.

In the **Federal Register** of March 20, 2012 (77 FR 16237), FDA published a 60-day notice requesting public comment on the proposed collection of information. FDA received no comments on the information collection.

FDA estimates the burden of this collection of information as follows:

TABLE 1—ESTIMATED ANNUAL REPORTING BURDEN

Requests for formal dispute resolution	Number of respondents	Number of responses per respondent	Total annual responses	Average burden per response	Total hours
CDER	9	2	18	8	144
CBER	1	1	1	8	8
Total					152

Dated: July 13, 2012.

Leslie Kux,

Assistant Commissioner for Policy.

[FR Doc. 2012–17556 Filed 7–18–12; 8:45 am]

BILLING CODE 4160–01–P

DEPARTMENT OF HEALTH AND HUMAN SERVICES

Food and Drug Administration

[Docket No. FDA–2011–N–0766]

Agency Information Collection Activities; Announcement of Office of Management and Budget Approval; Survey of ''Health Care Providers' Responses to Medical Device Labeling''

AGENCY: Food and Drug Administration, HHS.

ACTION: Notice.

SUMMARY: The Food and Drug Administration (FDA) is announcing that a collection of information entitled Survey of ''Health Care Providers' Responses to Medical Device Labeling'' has been approved by the Office of Management and Budget (OMB) under the Paperwork Reduction Act of 1995.

FOR FURTHER INFORMATION CONTACT: Daniel Gittleson, Office of Information Management, Food and Drug Administration, 1350 Piccard Dr., PI50–400B, Rockville, MD 20850, 301–796–5156, *Daniel.Gittleson@fda.hhs.gov.*

SUPPLEMENTARY INFORMATION: On March 8, 2012, the Agency submitted a proposed collection of information entitled Survey of ''Health Care Providers' Responses to Medical Device Labeling'' to OMB for review and clearance under 44 U.S.C. 3507. An Agency may not conduct or sponsor, and a person is not required to respond to, a collection of information unless it displays a currently valid OMB control number. OMB has now approved the information collection and has assigned OMB control number 0910–0715. The approval expires on July 31, 2015. A copy of the supporting statement for this information collection is available on the Internet at *http://www.reginfo.gov/public/do/PRAMain.*

Dated: July 12, 2012.

Leslie Kux,

Assistant Commissioner for Policy.

[FR Doc. 2012–17555 Filed 7–18–12; 8:45 am]

BILLING CODE 4160–01–P

DEPARTMENT OF HEALTH AND HUMAN SERVICES

Food and Drug Administration

[Docket No. FDA–2012–N–0001]

Ophthalmic Devices Panel of the Medical Devices Advisory Committee; Notice of Meeting

AGENCY: Food and Drug Administration, HHS.

ACTION: Notice.

This notice announces a forthcoming meeting of a public advisory committee of the Food and Drug Administration (FDA). The meeting will be open to the public.

Name of Committee: Ophthalmic Devices Panel of the Medical Devices Advisory Committee.

General Function of the Committee: To provide advice and recommendations to the Agency on FDA's regulatory issues.

Date and Time: The meeting will be held on September 28, 2012, from 8 a.m. to 6 p.m.

Location: Hilton Washington DC North/Gaithersburg, Salons A, B, C and D, 620 Perry Pkwy., Gaithersburg, MD 20877. The hotel's telephone number is 301–977–8900.

Contact Person: Natasha Facey, Center for Devices and Radiological Health, Food and Drug Administration, 10903 New Hampshire Ave., Bldg. 66, rm. 1544, Silver Spring, MD 20993–0002, *Natasha.Facey@fda.hhs.gov,* 301–796–5290, or FDA Advisory Committee Information Line, 1–800–741–8138 (301–443–0572 in the Washington, DC area), to find out further information regarding FDA advisory committee information. A notice in the **Federal Register** about last minute modifications that impact a previously announced advisory committee meeting cannot always be published quickly enough to provide timely notice. Therefore, you should always check the Agency's Web site at *http://www.fda.gov/AdvisoryCommittees/default.htm* and scroll down to the appropriate advisory committee meeting link, or call the advisory committee information line to learn about possible modifications before coming to the meeting.

Agenda: On September 28, 2012, the committee will discuss, make recommendations and vote on information regarding the humanitarian device exemption (HDE) application for the Argus II Retinal Prosthesis System sponsored by Second Sight Medical Products, Inc. The proposed Indication for Use for the Argus II (as stated in the HDE) is as follows:

The Argus II System is indicated for use in patients with severe to profound retinitis pigmentosa who meet the following criteria:

- Adults, age 25 years or older.
- Bare light or no light perception in both eyes with Snellen acuity worse than 20/2100 or 2.1 logMAR. If the patient has no residual light perception, the retina must be able to respond to electrical stimulation as evidenced by an electrically evoked response.
- Previous history of useful form vision.

FDA intends to make background material available to the public no later than 2 business days before the meeting. If FDA is unable to post the background material on its Web site prior to the meeting, the background material will be made publicly available at the location of the advisory committee meeting, and the background material will be posted on FDA's Web site after the meeting. Background material is available at *http://www.fda.gov/AdvisoryCommittees/Calendar/default.htm.* Scroll down to the appropriate advisory committee meeting link.

Procedure: Interested persons may present data, information, or views, orally or in writing, on issues pending before the committee. Written submissions may be made to the contact person on or before September 17, 2012. Oral presentations from the public will be scheduled between approximately 1 p.m. and 2 p.m. on September 28, 2012. Those individuals interested in making formal oral presentations should notify the contact person and submit a brief statement of the general nature of the evidence or arguments they wish to present, the names and addresses of proposed participants, and an indication of the approximate time requested to make their presentation on or before September 7, 2012. Time allotted for each presentation may be limited. If the number of registrants requesting to speak is greater than can be reasonably accommodated during the scheduled open public hearing session, FDA may conduct a lottery to determine the speakers for the scheduled open public hearing session. The contact person will notify interested persons regarding their request to speak by September 10, 2012.

Persons attending FDA's advisory committee meetings are advised that the Agency is not responsible for providing access to electrical outlets.

FDA welcomes the attendance of the public at its advisory committee meetings and will make every effort to accommodate persons with physical disabilities or special needs. If you require special accommodations due to a disability, please contact AnnMarie Williams at *Annmarie.Williams@fda.hhs.gov* or 301–796–5966, at least 7 days in advance of the meeting.

FDA is committed to the orderly conduct of its advisory committee meetings. Please visit our Web site at *http://www.fda.gov/AdvisoryCommittees/AboutAdvisoryCommittees/ucm111462.htm* for procedures on public conduct during advisory committee meetings.

Notice of this meeting is given under the Federal Advisory Committee Act (5 U.S.C. app. 2).

Dated: July 16, 2012.

Jill Hartzler Warner,

Acting Associate Commissioner for Special Medical Programs.

[FR Doc. 2012–17668 Filed 7–18–12; 8:45 am]

BILLING CODE 4160–01–P

DEPARTMENT OF HEALTH AND HUMAN SERVICES

National Institutes of Health

National Institute of Allergy and Infectious Diseases; Notice of Closed Meeting

Pursuant to section 10(d) of the Federal Advisory Committee Act, as amended (5 U.S.C. App.), notice is hereby given of the following meeting.

The meeting will be closed to the public in accordance with the provisions set forth in sections 552b(c)(4) and 552b(c)(6), Title 5 U.S.C., as amended. The grant applications and the discussions could disclose confidential trade secrets or commercial property such as patentable material, and personal information concerning individuals associated with the grant applications, the disclosure of which would constitute a clearly unwarranted invasion of personal privacy.

Name of Committee: National Institute of Allergy and Infectious Diseases Special Emphasis Panel; NIAID Science Education Awards (R25).

Date: July 31, 2012.

Time: 12:00 p.m. to 4:00 p.m.

Agenda: To review and evaluate grant applications.

Place: National Institutes of Health, 6700B Rockledge Drive, Bethesda, MD 20817, (Telephone Conference Call).

Contact Person: Richard W. Morris, Ph.D., Scientific Review Officer, Scientific Review Program, DEA/NIAID/NIH/DHHS, 6700–B Rockledge Drive, MSC–7616, Room 3251, Bethesda, MD 20892–7616, 301–451–2663, *rmorris@niaid.nih.gov.*

This notice is being published less than 15 days prior to the meeting due to the timing

limitations imposed by the review and funding cycle.

(Catalogue of Federal Domestic Assistance Program Nos. 93.855, Allergy, Immunology, and Transplantation Research; 93.856, Microbiology and Infectious Diseases Research, National Institutes of Health, HHS)

Dated: July 13, 2012.

David Clary,

Program Analyst, Office of Federal Advisory Committee Policy.

[FR Doc. 2012–17492 Filed 7–18–12; 8:45 am]

BILLING CODE 4140–01–P

DEPARTMENT OF HEALTH AND HUMAN SERVICES

National Institutes of Health

Center for Scientific Review; Notice of Closed Meeting

Pursuant to section 10(d) of the Federal Advisory Committee Act, as amended (5 U.S.C. App.), notice is hereby given of the following meeting.

The meeting will be closed to the public in accordance with the provisions set forth in sections 552b(c)(4) and 552b(c)(6), Title 5 U.S.C., as amended. The grant applications and the discussions could disclose confidential trade secrets or commercial property such as patentable material, and personal information concerning individuals associated with the grant applications, the disclosure of which would constitute a clearly unwarranted invasion of personal privacy.

Name of Committee: Center for Scientific Review Special Emphasis Panel; Member Conflict: CMIP and MEDI Continuous Submission Review Panel.

Date: July 27, 2012.

Time: 1:00 p.m. to 3:00 p.m.

Agenda: To review and evaluate grant applications.

Place: National Institutes of Health, 6701 Rockledge Drive, Bethesda, MD 20892, (Virtual Meeting).

Contact Person: Guo Feng Xu, Ph.D., Scientific Review Officer, Center for Scientific Review, National Institutes of Health, 6701 Rockledge Drive, Room 5122, MSC 7854, Bethesda, MD 20892, 301–237–9870, *xuguofen@csr.nih.gov.*

This notice is being published less than 15 days prior to the meeting due to the timing limitations imposed by the review and funding cycle.

(Catalogue of Federal Domestic Assistance Program Nos. 93.306, Comparative Medicine; 93.333, Clinical Research, 93.306, 93.333, 93.337, 93.393–93.396, 93.837–93.844, 93.846–93.878, 93.892, 93.893, National Institutes of Health, HHS)

Dated: July 13, 2012.

Jennifer Spaeth,

Director, Office of Federal Advisory Committee Policy.

[FR Doc. 2012–17512 Filed 7–18–12; 8:45 am]

BILLING CODE 4140–01–P

DEPARTMENT OF HEALTH AND HUMAN SERVICES

National Institutes of Health

Prospective Grant of Exclusive License: Development of a Diagnostic Tool for Diagnosing Benign Versus Malignant Thyroid Lesions

AGENCY: National Institutes of Health, Public Health Service, HHS.

ACTION: Notice.

SUMMARY: This is notice, in accordance with 35 U.S.C. 209(c)(1) and 37 CFR 404.7(a)(1)(i), that the National Institutes of Health, Department of Health and Human Services, is contemplating the grant of an exclusive patent license to practice the inventions embodied in PCT Patent Application No. PCT/US2005/12289, U.S. Patent No. 7,901,881, U.S. Patent Application No. 13/024,845 and foreign equivalents thereof entitled ''Diagnostic Tool for Diagnosing Benign Versus Malignant Thyroid Lesions'' (HHS Ref. No. E–124–2004/0,1,2) and PCT Patent Application No. PCT/US2008/010139 and U.S. Patent Application No. 12/675,209 entitled ''Diagnostic Tool for Diagnosing Benign Versus Malignant Thyroid Lesions'' (HHS Ref. No. E–326–2007/0) to Veracyte, Inc., which is located in San Francisco, California. The patent rights in these inventions have been assigned to the United States of America.

Other than license applications submitted as objections to this Notice of Intent to Grant an Exclusive License, no further license applications will be considered for the exclusive field of use set forth below if Veracyte, Inc. is granted an exclusive license pursuant to this Notice of Intent to Grant an Exclusive License. The prospective exclusive license territory may be worldwide and the field of use may be limited to the use of Licensed Patent Rights for the diagnosis and prognosis of thyroid cancer.

DATES: Only written comments and/or applications for a license which are received by the NIH Office of Technology Transfer on or before August 20, 2012 will be considered, in addition to the current non-exclusive applications under consideration, for the prospective license territory and field of use to be granted under the contemplated exclusive patent license.

ADDRESSES: Requests for copies of the patent application, inquiries, comments, and other materials relating to the contemplated exclusive license should be directed to: Whitney A. Hastings, Ph.D., Licensing and Patenting Manager, Office of Technology Transfer, National Institutes of Health, 6011 Executive Boulevard, Suite 325, Rockville, MD 20852–3804; Telephone: (301) 451–7337; Facsimile: (301) 402–0220; Email: *hastingw@mail.nih.gov.*

SUPPLEMENTARY INFORMATION: This technology is based on the discovery of differentially expressed thyroid (DET) genes and their encoded proteins whose expression levels can be correlated to benign or malignant states in a thyroid cell. Specifically, this data arose from a microarray analysis of genes expressed in the eight subtypes of thyroid tumors that are typically difficult to diagnose by cytology of fine needle aspiration (FNA) biopsies. Analysis of the (DET) genes led to the development of 6 gene and 10 gene models that distinguish benign vs. malignant papillary thyroid tumors. Subsequently, a 72 gene model has been developed for diagnosing less common forms of thyroid cancer such as follicular carcinoma. These results provide a molecular classification system for thyroid tumors and this in turn provides a more accurate diagnostic tool for the clinician managing patients with suspicious thyroid lesions. In addition to diagnostics, this invention can be used in the staging of thyroid malignancies by measuring changes in DET gene and protein expression relative to reference cells. Finally, this invention can also be used in the discovery of therapeutic agents through the detection in changes of DET gene and protein levels prior to and after treatment.

The prospective exclusive license and any further license applications received as objections to this Notice of Intent to Grant an Exclusive License, will be royalty bearing and will comply with the terms and conditions of 35 U.S.C. 209 and 37 CFR 404.7. The prospective exclusive license may be granted unless within thirty (30) days from the date of this published notice, the NIH receives written evidence and argument that establishes that the grant of the license would not be consistent with the requirements of 35 U.S.C. 209 and 37 CFR 404.7.

Any additional applications for a license in the field of use filed in response to this notice will be treated as objections to the grant of the contemplated exclusive license.

Comments and objections submitted to this notice will not be made available for public inspection and, to the extent permitted by law, will not be released under the Freedom of Information Act, 5 U.S.C. 552.

Dated: July 13, 2012.

Richard U. Rodriguez,

Director, Division of Technology Development and Transfer, Office of Technology Transfer, National Institutes of Health.

[FR Doc. 2012–17497 Filed 7–18–12; 8:45 am]

BILLING CODE 4140–01–P

DEPARTMENT OF HOUSING AND URBAN DEVELOPMENT

[Docket No. FR–5602–N–05]

Notice of Proposed Information Collection: Comment Request Notice of Application for Designation as a Single Family Foreclosure Commissioner

AGENCY: Office of the General Counsel, HUD.

ACTION: Notice.

SUMMARY: The proposed information collection requirement described below will be submitted to the Office of Management and Budget (OMB) for review, as required by the Paperwork Reduction Act. The Department is soliciting public comments on the subject proposal.

DATES: *Comments Due Date:* September 17, 2012.

ADDRESSES: Interested persons are invited to submit comments regarding this proposal. Comments should refer to the proposal by name and/or OMB Control Number and should be sent to: Reports Liaison Officer, Office of General Counsel, Department of Housing and Urban Development, 451 7th Street SW., Room 10276, Washington, DC 20410–0500.

FOR FURTHER INFORMATION CONTACT: Sherece Tolbert, Deputy Assistant General Counsel, Single Family Mortgage Division, Office of General Counsel, Department of Housing and Urban Development, 451 7th Street SW., Room 9240, Washington, DC 20410–0500, telephone (202–708–0080) (this is not a toll-free number).

SUPPLEMENTARY INFORMATION: The Department is submitting the proposed information collection to OMB for review, as required by the Paperwork Reduction Act of 1995 (44 U.S.C. Chapter 35, as amended).

This Notice is soliciting comments from members of the public and affecting agencies concerning the proposed collection of information to: (1) Evaluate whether the proposed collection of information is necessary for the proper performance of the functions of the agency, including whether the information will have practical utility; (2) Evaluate the accuracy of the agency's estimate of the burden of the proposed collection of information; (3) Enhance the quality, utility, and clarity of the information to be collected; and (4) Minimize the burden of the collection of information on those who are to respond; including through the use of appropriate automated collection techniques or other forms of information technology, e.g., permitting electronic submission of responses.

This Notice also lists the following information:

Title of Proposal: Notice of Application for Designatin As a Single Family Foreclosure Commissioner (SF Mortgage Foreclosure Act of 1994).

OMB Control Number, if applicable: 2510–0012.

Description of the need for the information and proposed use: Under the Single Family Mortgage Foreclsoure Act of 1994, HUD may exercise a nonjudicial Power of Sale of single family HUD-held mortgages and may appoint Foreclsoure Commissioners to do this. HUD needs the Notice and resulting appliations for compliance with the Act's requirements that commissioners be qualified. Most respondents will be attorneys, but anyone may apply.

Agency form numbers, if applicable: None.

Members of affected public: Business or Other For-Profit and Individuals or Households.

Estimation of the total numbers of hours needed to prepare the information collection including number of respondents, frequency of response, and hours of response:

Number of respondents	Frequency of response	Hours per response	Total burden hours
30	1	.5	15

Status of the proposed information collection: Reinstatement of collection.

Authority: The Paperwork Reduction Act of 1995, 44 U.S.C. Chapter 35, as amended.

Dated: July 16, 2012.

Camille E. Acevedo,

Associate General Counsel for Legislation and Regulations.

[FR Doc. 2012–17637 Filed 7–18–12; 8:45 am]

BILLING CODE 4210–67–P

DEPARTMENT OF THE INTERIOR

Bureau of Land Management

[LLNVE03000 L51100000.GN0000. LVEMF1201550.241A; NVN–91032; MO# 4500035419; TAS: 14X5017]

Notice of Intent To Prepare an Environmental Impact Statement for the Proposed Long Canyon Mine Project, Elko County, NV

AGENCY: Bureau of Land Management, Interior.

ACTION: Notice of intent.

SUMMARY: In compliance with the National Environmental Policy Act of 1969 (NEPA), as amended, and the Federal Land Policy and Management Act (FLPMA) of 1976, as amended, the Bureau of Land Management (BLM) Wells Field Office, Elko, Nevada, intends to prepare an Environmental Impact Statement (EIS) for the Long Canyon Mine, and by this notice is announcing the beginning of the scoping process to solicit public comments and identify issues.

DATES: This notice initiates the public scoping process for the EIS. Comments on issues may be submitted in writing until September 4, 2012. The date(s) and location(s) of any scoping meetings will be announced at least 15 days in advance through local media, newspapers, and the BLM Web site at: www.blm.gov/rv5c. In order to be included in the Draft EIS, all comments must be received prior to the close of the scoping period. The BLM will provide additional opportunities for public participation upon publication of the Draft EIS.

ADDRESSES: You may submit comments related to the Long Canyon Mine Project by any of the following methods:

- *Email: BLM_NV_ELDOLongCanyon Mine@blm.gov.*
- *Fax:* 775–753–0385.
- *Mail:* BLM Elko District Office, Wells Field Office, Attn: Whitney Wirthlin, 3900 E. Idaho Street, Elko, Nevada 89801.

Documents pertinent to this proposal may be examined at the Wells Field Office, 3900 E. Idaho Street, Elko, Nevada, 89801.

FOR FURTHER INFORMATION CONTACT: Whitney Wirthlin, project lead, telephone: 775–753–0342; email: *BLM_NV_ELDOLongCanyonMine@blm.gov.* Persons who use a telecommunications device for the deaf (TDD) may call the Federal Information Relay Service (FIRS) at 1–800–877–8339 to contact the above individual during normal business hours. The FIRS is available 24 hours a day, 7 days a week, to leave a message or question with the above individual. You will receive a reply during normal business hours.

SUPPLEMENTARY INFORMATION: Newmont Mining Corporation (Newmont) proposes to construct and operate an open-pit gold mining operation, which would include one open pit, a heap leach pad, one waste rock dump, a tailings storage facility, and other ancillary facilities. The mine would be located on the eastern side of the Pequop Mountain Range, about 30 miles east of Wells, Nevada, and 32 miles west of West Wendover, Nevada, and 5 miles south of Interstate 80. Currently, Fronteer Development, a subsidiary of Newmont, is authorized to disturb up to 115 acres for exploration purposes. The associated disturbance for the proposed operations would increase to 1,631 acres of public land, including 480 acres of split estate lands of Federal surface and private subsurface. The projected life of the mine is 8 to 14 years, including construction, operations, and closure and post-closure monitoring. An estimated annual workforce for operations would be approximately 300 to 500 people during the life of the mine.

Fronteer is currently conducting exploration activities in this area that were analyzed in two environmental assessments (EA), the *NewWest Gold USA Inc. Long Canyon Exploration Project (July 2008, EA No. BLM/EK/PL–2008/011)* and *Fronteer Development (USA) Inc. Expanded Long Canyon Exploration Project (June 2011, DOI–BLM–NV–N030–2011–00001–EA).* The Long Canyon Mine is in conformance with the Wells Resource Management Plan (RMP) and the proposal is in conformance with the approved decisions of the RMP.

The issues identified during scoping will be used to develop a range of alternatives, including a no-action alternative. Mitigation measures will be considered to minimize environmental impacts and to ensure the proposed action does not result in unnecessary or undue degradation of public lands.

The purpose of the public scoping process is to determine relevant issues that will influence the scope of the environmental analysis, including alternatives, and guide the process for developing the EIS. At present, the BLM has identified the following preliminary issues:

(a) Potential effects to archaeological resources in the area;

(b) Potential effects to greater sage-grouse posed by the proximity to an active sage-grouse lek;

(c) Potential effects to viewshed in and around areas of Visual Resources Management Classes I through IV;

(d) Potential impacts to the water supply of Wendover, Utah, and West Wendover, Nevada; and

(e) Potential effects to the Area 7 mule deer herd and the mule deer migration corridor associated with the herd. The proposed project area is located in a mule deer migration corridor.

The BLM will utilize and coordinate the NEPA commenting process to help fulfill the public involvement process under Section 106 of the National Historic Preservation Act (16 U.S.C. 470f) as provided for in 36 CFR 800.2(d)(3). Native American tribal consultations will be conducted in accordance with policy, and tribal concerns will be given due consideration, including impacts on Indian trust assets. Federal, State, and local agencies, along with other stakeholders that may be interested or affected by the BLM's decision on this project are invited to participate in the scoping process and, if eligible, may request or be requested by the BLM to participate as a cooperating agency.

Before including your address, phone number, email address, or other personal identifying information in your comment, you should be aware that your entire comment—including your personal identifying information—may be made publicly available at any time. While you can ask us in your comment to withhold your personal identifying information from public review, we cannot guarantee that we will be able to do so.

Authority: 40 CFR 1501 and 43 CFR 3809.

Kenneth E. Miller,

District Manager, Elko District Office.

[FR Doc. 2012–17583 Filed 7–18–12; 8:45 am]

BILLING CODE 4310–HC–P

DEPARTMENT OF THE INTERIOR

Bureau of Land Management

[LLCA 942000 L57000000 BX0000]

Filing of Plats of Survey: California

AGENCY: Bureau of Land Management, Interior.

ACTION: Notice.

SUMMARY: The plats of survey of lands described below are scheduled to be officially filed in the Bureau of Land Management California State Office, Sacramento, California, thirty (30) calendar days from the date of this publication.

ADDRESSES: A copy of the plats may be obtained from the California State Office, Bureau of Land Management, 2800 Cottage Way, Sacramento, California 95825, upon required payment.

Protest: A person or party who wishes to protest a survey must file a notice that they wish to protest with the California State Director, Bureau of Land Management, 2800 Cottage Way, Sacramento, California 95825.

FOR FURTHER INFORMATION CONTACT: Chief, Branch of Geographic Services, Bureau of Land Management, California State Office, 2800 Cottage Way, Room W–1623, Sacramento, California 95825, (916) 978–4310.

SUPPLEMENTARY INFORMATION: These surveys were executed to meet the administrative needs of various federal agencies; the Bureau of Land Management, Bureau of Indian Affairs or Bureau of Reclamation. The lands surveyed are:

Mount Diablo Meridian, California

T. 4 S., R. 29 E., dependent resurvey and subdivision of section accepted June 8, 2012.

T. 46 N., R. 16 E., corrective resurvey and dependent resurvey accepted June 13, 2012.

T. 31 S., R. 32 E., dependent resurvey and metes-and-bounds survey accepted June 15, 2012.

T. 19 S., R. 12 E., dependent resurvey and subdivision accepted June 20, 2012.

Authority: 43 U.S.C., Chapter 3.

Dated: July 12, 2012

Roger E. Blouch,

Acting Chief Cadastral Surveyor, California.

[FR Doc. 2012–17565 Filed 7–18–12; 8:45 am]

BILLING CODE 4310–40–P

DEPARTMENT OF THE INTERIOR

Bureau of Land Management

[LLMTC 00900.L16100000.DP0000]

Notice of Public Meeting, Eastern Montana Resource Advisory Council Meeting

AGENCY: Bureau of Land Management, Interior.

ACTION: Notice of public meeting.

SUMMARY: In accordance with the Federal Land Policy and Management Act (FLPMA) and the Federal Advisory Committee Act of 1972 (FACA), the U.S. Department of the Interior, Bureau of Land Management (BLM) Eastern Montana Resource Advisory Council (RAC) will meet as indicated below.

DATES: The next regular meeting of the Eastern Montana RAC will be held on September 19, 2012, in Miles City, Montana. The meeting will start at 8:00 a.m. and adjourn at approximately 3:30 p.m.

ADDRESSES: When determined, the meeting location will be announced in a news release.

FOR FURTHER INFORMATION CONTACT: Mark Jacobsen, Public Affairs Specialist, BLM Eastern Montana/Dakotas District, 111 Garryowen Road Miles City, Montana 59301, (406) 233–2831, *mark_jacobsen@blm.gov*. Persons who use a telecommunications device for the deaf (TDD) may call the Federal Information Relay Service (FIRS) at 1–800–677–8339 to contact the above individual during normal business hours. The FIRS is available 24 hours a day, 7 days a week to leave a message or question with the above individual. You will receive a reply during normal business hours.

SUPPLEMENTARY INFORMATION: The 15-member council advises the Secretary of the Interior through the BLM on a variety of planning and management issues associated with public land management in Montana. At these meetings, topics will include: Miles City and Billings Field Office manager updates, subcommittee briefings, work sessions, and other issues that the council may raise. All meetings are open to the public and the public may present written comments to the council. Each formal RAC meeting will also have time allocated for hearing public comments. Depending on the number of persons wishing to comment and time available, the time for individual oral comments may be limited. Individuals who plan to attend and need special assistance, such as sign language interpretation, tour transportation, or other reasonable accommodations should contact the BLM as provided above.

Dated: July 9, 2012.

Diane Friez,

Eastern Montana—Dakotas District Manager.

[FR Doc. 2012–17567 Filed 7–18–12; 8:45 am]

BILLING CODE 4310–DN–P

DEPARTMENT OF THE INTERIOR

National Park Service

[NPS–WASO–NAGPRA–10743; 2200–1100–665]

Notice of Inventory Completion: New York University College of Dentistry, New York, NY

AGENCY: National Park Service, Interior.

ACTION: Notice.

SUMMARY: The New York University College of Dentistry has completed an inventory of human remains, in consultation with the appropriate Indian tribes, and has determined that there is no cultural affiliation between the remains and any present-day Indian tribe. Representatives of any Indian tribe that believes itself to be culturally affiliated with the human remains may contact the New York University College of Dentistry. Disposition of the human remains to the Indian tribes stated below may occur if no additional requestors come forward.

DATES: Representatives of any Indian tribe that believes it has a cultural affiliation with the human remains should contact the New York University College of Dentistry at the address below by August 20, 2012.

ADDRESSES: Dr. Louis Terracio, New York University College of Dentistry, 345 East 24th St, New York, NY 10010, telephone (212) 998–9917.

SUPPLEMENTARY INFORMATION: Notice is here given in accordance with the Native American Graves Protection and Repatriation Act (NAGPRA), 25 U.S.C. 3003, of the completion of an inventory of human remains in the possession of the New York University College of Dentistry. The human remains were removed from Rincon, in Santa Cruz County, CA.

This notice is published as part of the National Park Service's administrative responsibilities under NAGPRA, 25 U.S.C. 3003(d)(3) and 43 CFR 10.11(d). The determinations in this notice are the sole responsibility of the museum, institution, or Federal agency that has control of the Native American human remains. The National Park Service is not responsible for the determinations in this notice.

Consultation

A detailed assessment of the human remains was made by the New York University College of Dentistry professional staff in consultation with representatives of the Big Sandy Rancheria of Mono Indians of California; Cold Springs Rancheria of Mono Indians of California; Northfork Rancheria of Mono Indians of California; Picayune Rancheria of Chukchansi Indians of California; Santa Rosa Indian Community of the Santa Rosa Rancheria, California; Table Mountain Rancheria of California; Tule River Indian Tribe of the Tule River Reservation, California; and the Tuolumne Band of Me-Wuk Indians of the Tuolumne Rancheria of California (hereafter referred to as ''The Tribes'').

History and Description of the Remains

At an unknown date, human remains representing, at minimum, one individual were removed from an unknown site in Rincon, in Santa Cruz County, CA by an unknown individual. At an unknown date, the remains were catalogued into the Department of Physical Anthropology, Museum of the American Indian. In 1956, the remains were transferred to Dr. Theodore Kazamiroff, New York University College of Dentistry. No known individuals were identified. No associated funerary objects are present.

Determinations Made by the New York University College of Dentistry

Officials of the New York University College of Dentistry have determined that:

- Based on catalog information and forensic examination, the human remains are Native American.
- Pursuant to 25 U.S.C. 3001(2), a relationship of shared group identity cannot be reasonably traced between the Native American human remains and any present-day Indian tribe.
- According to final judgments of the Indian Claims Commission, the land from which the Native American human remains were removed is the aboriginal land of the southern Yokut and western Mono, who are represented today by The Tribes.
- The unratified treaty of 1851 indicates that the land from which the Native American human remains were removed is the aboriginal land of the southern Yokut and western Mono, who are represented today by The Tribes.
- Pursuant to 25 U.S.C. 3001(9), the human remains described in this notice

represent the physical remains of one individual of Native American ancestry.

• Pursuant to 43 CFR 10.11(c)(1), the disposition of the human remains is to The Tribes.

Additional Requestors and Disposition

Representatives of any Indian tribe that believes itself to be culturally affiliated with the human remains or any other Indian tribe that believes it satisfies the criteria in 43 CFR 10.11(c)(1) should contact Dr. Louis Terracio, New York University College of Dentistry, 345 East 24th St, New York, NY 10010, telephone (212) 998–9917, before August 20, 2012. Disposition of the human remains to The Tribes may proceed after that date if no additional requestors come forward.

The New York University College of Dentistry is responsible for notifying The Tribes that this notice has been published.

Dated: June 28, 2012.

Sherry Hutt,

Manager, National NAGPRA Program.

[FR Doc. 2012–17629 Filed 7–18–12; 8:45 am]

BILLING CODE 4312–50–P

DEPARTMENT OF THE INTERIOR

National Park Service

[NPS–WASO–NAGPRA–10742; 2200–1100–665]

Notice of Inventory Completion: New York University College of Dentistry, New York, NY

AGENCY: National Park Service, Interior.

ACTION: Notice.

SUMMARY: The New York University College of Dentistry has completed an inventory of human remains, in consultation with the appropriate Indian tribes, and has determined that there is a cultural affiliation between the human remains and present-day Indian tribes. Representatives of any Indian tribe that believes itself to be culturally affiliated with the human remains may contact the New York University College of Dentistry. Repatriation of the human remains to the Indian tribes stated below may occur if no additional claimants come forward.

DATES: Representatives of any Indian tribe that believes it has a cultural affiliation with the human remains should contact the New York University College of Dentistry at the address below by August 20, 2012.

ADDRESSES: Dr. Louis Terracio, New York University College of Dentistry, 345 East 24th St, New York, NY 10010, telephone (212) 998–9917.

SUPPLEMENTARY INFORMATION: Notice is here given in accordance with the Native American Graves Protection and Repatriation Act (NAGPRA), 25 U.S.C. 3003, of the completion of an inventory of human remains in the possession of the New York University College of Dentistry. The human remains were removed from San Joaquin County, CA.

This notice is published as part of the National Park Service's administrative responsibilities under NAGPRA, 25 U.S.C. 3003(d)(3). The determinations in this notice are the sole responsibility of the museum, institution, or Federal agency that has control of the Native American human remains. The National Park Service is not responsible for the determinations in this notice.

Consultation

A detailed assessment of the human remains was made by the New York University College of Dentistry professional staff in consultation with representatives of the Buena Vista Rancheria of Me-Wuk Indians of California; California Valley Miwok Tribe, California; Chicken Ranch Rancheria of Me-Wuk Indians of California; Federated Indians of Graton Rancheria, California; Ione Band of Miwok Indians of California; Jackson Rancheria of Me-Wuk Indians of California; Picayune Rancheria of Chukchansi Indians of California; Santa Rosa Indian Community of the Santa Rosa Rancheria, California; Shingle Springs Band of Miwok Indians, Shingle Springs Rancheria (Verona Tract), California; Table Mountain Rancheria of California; Tule River Indian Tribe of the Tule River Reservation, California; Tuolumne Band of Me-Wuk Indians of the Tuolumne Rancheria of California; and the United Auburn Indian Community of the Auburn Rancheria of California (hereafter referred to as ''The Tribes'').

History and Description of the Remains

At an unknown date, human remains representing, at minimum, two individuals were removed from Rhoads Mound in San Joaquin County, CA. At an unknown date, they became part of the collection of H.K. Deisher, which was sold in 1905. In 1916, the remains were catalogued into the collection of the Department of Physical Anthropology, Museum of the American Indian. In 1956, the remains were transferred to Dr. Theodore Kazamiroff, New York University College of Dentistry. No known individuals were identified. No associated funerary objects are present.

Rhoads Mound is a protohistoric site (A.D. 1500–1770) located on Roberts Island in the San Joaquin-Sacramento River delta. The island lies at the southern edge of aboriginal territory of the Eastern (Bay and Plains) Miwok and the northern edge of aboriginal territory of the Northern Valley Yokut.

At an unknown date, human remains representing, at minimum, two individuals were removed from Walkers Slough Mound in San Joaquin County, CA. At an unknown date, they became part of the collection of H.K. Deisher, which was sold in 1905. In 1916, the remains were catalogued into the collection of the Department of Physical Anthropology, Museum of the American Indian. In 1956, the remains were transferred to Dr. Theodore Kazamiroff, New York University College of Dentistry. No known individuals were identified. No associated funerary objects are present.

The Walkers Slough Mound is a historic site (A.D. 1770–1850) located near Stockton, in the area of the San Joaquin River Valley. The mound lies at the southern edge of aboriginal territory of the Eastern (Bay and Plains) Miwok and the northern edge of aboriginal territory of the Northern Valley Yokut.

The territorial divisions within the aboriginal lands of the Eastern (Bay and Plains) Miwok and the Northern Valley Yokut was diffuse and shifted through time. During consultation, tribal representatives stated that the early anthropological studies of the Yokuts and Miwok incorrectly divided these groups into discrete tribelets and overemphasized linguistic differences. Tribal representatives explained that although different dialects were spoken, the Miwok spoke a mutually intelligible language. The Yokuts also spoke a mutually intelligible language with regional dialects. Tribal representatives indicated that high population mobility and frequent intermarriage between groups during the historic period has resulting in a relationship of shared group identity for all Miwok tribes. Similarly, tribal representatives indicated that the Yokuts are all interrelated due to high population mobility and frequent intermarriage between groups.

Tribal representatives identified the descendants of the Eastern Miwok among the members of the Federally-recognized Miwok communities, including the Buena Vista Rancheria of Me-Wuk Indians of California; California Valley Miwok Tribe, California; Chicken Ranch Rancheria of Me-Wuk Indians of California; Federated Indians of Graton Rancheria, California; Ione Band of Miwok Indians

of California; Jackson Rancheria of Me-Wuk Indians of California; Shingle Springs Band of Miwok Indians, Shingle Springs Rancheria (Verona Tract), California; Tuolumne Band of Me-Wuk Indians of the Tuolumne Rancheria of California; and the United Auburn Indian Community of the Auburn Rancheria of California. Tribal representatives identified the descendants of the Northern Valley Yokut among the Federally recognized Yokut tribes, including the Picayune Rancheria of Chukchansi Indians of California; Santa Rosa Indian Community of the Santa Rosa Rancheria, California; Table Mountain Rancheria of California; Tule River Indian Tribe of the Tule River Reservation, California; and the Tuolumne Band of Me-Wuk Indians of the Tuolumne Rancheria of California.

Determinations Made by the New York University College of Dentistry

Officials of the New York University College of Dentistry have determined that:

- Pursuant to 25 U.S.C. 3001(9), the human remains described in this notice represent the physical remains of four individuals of Native American ancestry.
- Pursuant to 25 U.S.C. 3001(2), there is a relationship of shared group identity that can be reasonably traced between the Native American human remains and The Tribes.

Additional Requestors and Disposition

Representatives of any Indian tribe that believes itself to be culturally affiliated with the human remains should contact Dr. Louis Terracio, New York University College of Dentistry, 345 East 24th St, New York, NY 10010, telephone (212) 998–9917, before August 20, 2012. Repatriation of the human remains to The Tribes may proceed after that date if no additional claimants come forward.

The New York University College of Dentistry is responsible for notifying The Tribes that this notice has been published.

Dated: June 28, 2012.

Sherry Hutt,

Manager, National NAGPRA Program.

[FR Doc. 2012–17646 Filed 7–18–12; 8:45 am]

BILLING CODE 4312–50–P

DEPARTMENT OF THE INTERIOR

National Park Service

[NPS–WASO–NAGPRA–10632; 2200–1100–665]

Notice of Inventory Completion: The University of Montana, Missoula, MT

AGENCY: National Park Service, Interior.

ACTION: Notice.

SUMMARY: The University of Montana has completed an inventory of Native American human remains and associated funerary objects in consultation with the Confederated Salish and Kootenai Tribes of the Flathead Indian Reservation, Montana, and has determined that there is a cultural affiliation between the human remains and associated funerary objects and the Confederated Salish and Kootenai Tribes of the Flathead Indian Reservation, Montana. Representatives of any Indian tribe that believes itself to be culturally affiliated with the human remains and associated funerary objects may contact the University of Montana. Repatriation of the human remains and associated funerary objects to the Indian tribes stated below may occur if no additional claimants come forward.

DATES: Representatives of any Indian tribe that believes it has a cultural affiliation with the human remains and associated funerary objects should contact the University of Montana at the address below by August 20, 2012.

ADDRESSES: Dr. Sally Thompson, Department of Anthropology, University of Montana, Missoula, MT 59812, telephone (406) 243–5525.

SUPPLEMENTARY INFORMATION: Notice is here given in accordance with the Native American Graves Protection and Repatriation Act (NAGPRA), 25 U.S.C. 3003, of the completion of an inventory of human remains and associated funerary objects in the collections of the University of Montana, Missoula, MT. Human remains of three individuals and associated funerary objects were removed from locations along the west shore of Flathead Lake in Lake County, MT. Human remains of one individual were removed from within the city limits of Missoula, MT.

This notice is published as part of the National Park Service's administrative responsibilities under NAGPRA, 25 U.S.C. 3003(d)(3). The determinations in this notice are the sole responsibility of the institution that has control of the Native American human remains and associated funerary objects. The National Park Service is not responsible for the determinations in this notice.

Consultation

A detailed assessment of the human remains was made by the University of Montana professional staff in consultation with representatives of the Confederated Salish and Kootenai Tribes of the Flathead Indian Reservation, Montana.

History and Description of the Remains

In 1950, human remains representing, at minimum, two individuals were removed from the west shore of Flathead Lake, north of the Flathead Reservation, in Lake County, MT. This pre-contact burial was disturbed by excavation equipment and then turned over to the University of Montana, Department of Anthropology. The remains were discovered in the University's collection in 2011. Of the two individuals present, one is the nearly complete skeleton of an older female, at least 50 years of age at death. The second individual, represented only by several vertebrae, was also elderly, but exact age and sex cannot be determined. No known individuals were identified. No associated funerary objects are present.

In 1950, human remains representing, at minimum, one individual were removed from a primary, flexed burial in a rock outcropping on the west shore of Flathead Lake, in Lake County, MT, during real estate development. The site is within the boundaries of the Flathead Reservation but on private land near the town of Dayton, MT. Local amateur archaeologist, Thain White, contacted Carling Malouf of the University of Montana, Department of Anthropology, and the remains and associated funerary objects were removed to the University of Montana in Missoula. The human remains and associated funerary objects were discovered in the University's collection in 2011. The mostly complete skeleton is of a male, aged 35 to 50 years at death. No known individual was identified. The eight associated funerary objects are 1 large (6 cm) turtle-backed stone scraper, 1 chalcedony flake, 2 shell beads, 3 antler pieces, and 1 lot of faunal remains.

In 1950, during excavations for a business establishment human remains representing, at minimum, one individual were removed by a bulldozer from an historical Indian burial in the city of Missoula, MT. This burial site location is within the aboriginal territory of the Confederated Salish and Kootenai Tribes. The nearly complete skeletal remains of a child, aged 7 to 8 years at death, and associated funerary objects were transferred by the County Coroner to the University of Montana,

Department of Anthropology, for analysis by Carling Malouf. In 2011, the human remains and associated funerary objects were discovered to be associated with documentation of an Indian burial. No known individual was identified. The six associated funerary objects are 1 commercially-manufactured purse, 1 pink glass bead, 1 Kootenai style leather moccasin tongue insert, 1 rawhide pouch, and 2 rawhide fragments.

Determinations Made by the University of Montana

Officials of the University of Montana have determined that:

- Pursuant to 25 U.S.C. 3001(9), the human remains described in this notice represent the physical remains of four individuals of Native American ancestry.
- Pursuant to 25 U.S.C. 3001(3)(A), the 14 objects described above are reasonably believed to have been placed with or near individual human remains at the time of death or later as part of the death rite or ceremony.
- Pursuant to 25 U.S.C. 3001(2), there is a relationship of shared group identity that can be reasonably traced between the Native American human remains and associated funerary objects and the Confederated Salish and Kootenai Tribes of the Flathead Reservation, Montana.

Additional Requestors and Disposition

Representatives of any Indian tribe that believes itself to be culturally affiliated with the human remains and associated funerary objects should contact Dr. Sally Thompson, Department of Anthropology, University of Montana, Missoula, MT 59812, telephone (406) 243–5525 before August 20, 2012. Repatriation of the human remains and associated funerary objects to the Confederated Salish and Kootenai Tribes of the Flathead Reservation, Montana, may proceed after that date if no additional claimants come forward.

The University of Montana is responsible for notifying the Confederated Salish and Kootenai Tribes of the Flathead Reservation, Montana, that this notice has been published.

Dated: June 18, 2012.

Sherry Hutt,

Manager, National NAGPRA.

[FR Doc. 2012–17625 Filed 7–18–12; 8:45 am]

BILLING CODE 4312–50–P

DEPARTMENT OF THE INTERIOR

National Park Service

[NPS–WASO–NAGPRA–10744; 2200–1100–665]

Notice of Inventory Completion: New York University College of Dentistry, New York, NY; Correction

AGENCY: National Park Service, Interior.

ACTION: Notice; correction.

Notice is here given in accordance with the Native American Graves Protection and Repatriation Act (NAGPRA), 25 U.S.C. 3003, of the completion of an inventory of human remains under the control of the New York University College of Dentistry, New York, NY. The human remains were removed from Bronx County, NY.

This notice is published as part of the National Park Service's administrative responsibilities under NAGPRA, 25 U.S.C. 3003(d)(3). The determinations in this notice are the sole responsibility of the museum, institution, or Federal agency that has control of the Native American human remains and associated funerary objects. The National Park Service is not responsible for the determinations in this notice.

This notice corrects the name of a culturally affiliated tribe in a Notice of Inventory Completion published in the **Federal Register** (74 FR 42106–42107, August 20, 2009). The Delaware Tribe of Indians, Oklahoma, received Federal recognition on July 28, 2009, after the notice was signed by the National NAGPRA Program, but before the notice was published.

In the **Federal Register** (74 FR 42106–42107, August 20, 2009), paragraph three is corrected by substituting the following paragraph:

A detailed assessment of the human remains was made by New York University College of Dentistry professional staff in consultation with representatives of the Delaware Nation of Oklahoma; Delaware Tribe of Indians, Oklahoma; and Stockbridge Munsee Community, Wisconsin.

In the **Federal Register** (74 FR 42106–42107, August 20, 2009), paragraph five, sentences 10–11 are corrected by substituting the following sentences:

Today, these groups are known as the Delaware Nation of Oklahoma and the Delaware Tribe of Indians, Oklahoma. Consultation evidence supports the identification of remains from the Broadway and Isham Streets site as Munsee and the cultural affiliation of the remains as the Delaware Nation of Oklahoma; Delaware Tribe of Indians, Oklahoma; and Stockbridge Munsee Community, Wisconsin.

In the **Federal Register** (74 FR 42106–42107, August 20, 2009), paragraph six, sentence two, is corrected by substituting the following sentence:

Officials of New York University College of Dentistry have also determined that, pursuant to 25 U.S.C. 3001(2), there is a relationship of shared group identity that can be reasonably traced between the Native American human remains and the Delaware Nation of Oklahoma; Delaware Tribe of Indians, Oklahoma; and Stockbridge Munsee Community, Wisconsin.

In the **Federal Register** (74 FR 42106–42107, August 20, 2009), paragraph seven, sentence two, is corrected by substituting the following paragraph:

Repatriation of the human remains to the Delaware Nation of Oklahoma; Delaware Tribe of the Indians, Oklahoma; and Stockbridge Munsee Community, Wisconsin, may proceed after that date if no additional claimants come forward.

Additional Requestors and Disposition

Representatives of any other Indian tribe that believes itself to be culturally affiliated with the human remains should contact Dr. Louis Terracio, New York University College of Dentistry, 345 East 24th St, New York, New York, 10010, telephone 212–998–9917, before August 20, 2012 Repatriation of the human remains to the Delaware Nation of Oklahoma; Delaware Tribe of the Indians, Oklahoma; and Stockbridge Munsee Community, Wisconsin, may proceed after that date if no additional claimants come forward.

The New York University College of Dentistry is responsible for notifying the Delaware Nation of Oklahoma; Delaware Tribe of Indians, Oklahoma; and Stockbridge Munsee Community, Wisconsin, that this notice has been published.

Dated: June 28, 2012.

Sherry Hutt,

Manager, National NAGPRA Program.

[FR Doc. 2012–17618 Filed 7–18–12; 8:45 am]

BILLING CODE 4312–50–P

DEPARTMENT OF THE INTERIOR

National Park Service

[NPS–WASO–NAGPRA–10729; 2200–1100–665]

Notice of Inventory Completion: History Colorado, Denver, CO

AGENCY: National Park Service, Interior.

ACTION: Notice.

SUMMARY: History Colorado (formerly the Colorado Historical Society) has completed an inventory of human remains and associated funerary objects, in consultation with the appropriate Indian tribes, and has determined that there is insufficient evidence to reasonably establish cultural affiliation between the human remains and associated funerary objects and present-day Indian tribes. Representatives of any Indian tribe that believes itself to be culturally affiliated with the human remains and associated funerary objects may contact History Colorado. Disposition of the human remains and associated funerary objects to the Indian tribes stated below may occur if no additional claimants come forward.

DATES: Representatives of any Indian tribe that believes it has a cultural affiliation with the human remains and associated funerary objects should contact History Colorado at the address below by August 20, 2012.

ADDRESSES: Sheila Goff, NAGPRA Liaison, History Colorado, 1200 Broadway, Denver, CO 80203, telephone (303) 866–4561.

SUPPLEMENTARY INFORMATION: Notice is here given in accordance with the Native American Graves Protection and Repatriation Act (NAGPRA), 25 U.S.C. 3003, of the completion of an inventory of human remains and associated funerary objects under the control of History Colorado, Denver, CO. One set of remains was discovered in Rio Blanco County, CO. The exact locations from which the three additional sets of human remains were recovered are unknown.

This notice is published as part of the National Park Service's administrative responsibilities under NAGPRA, 25 U.S.C. 3003(d)(3) and 43 CFR 10.11(d). The determinations in this notice are the sole responsibility of the museum, institution, or Federal agency that has control of the Native American human remains and associated funerary objects. The National Park Service is not responsible for the determinations in this notice.

Consultation

In 2012, a detailed assessment of the human remains and associated funerary objects was made by History Colorado professional staff in consultation with representatives of the Arapahoe Tribe of the Wind River Reservation, Wyoming; Cheyenne and Arapaho Tribes, Oklahoma (formerly the Cheyenne-Arapaho Tribes of Oklahoma); Cheyenne River Sioux Tribe of the Cheyenne River Reservation, South Dakota; Comanche Nation, Oklahoma; Crow Creek Sioux Tribe of the Crow Creek Reservation, South Dakota; Crow Tribe of Montana; Fort Sill Apache Tribe of Oklahoma; Hopi Tribe of Arizona; Jicarilla Apache Nation, New Mexico; Kewa Pueblo, New Mexico (formerly Pueblo of Santo Domingo); Mescalero Apache Tribe of the Mescalero Reservation, New Mexico; Navajo Nation, Arizona, New Mexico & Utah; Northern Cheyenne Tribe of the Northern Cheyenne Indian Reservation, Montana; Ohkay Owingeh, New Mexico (formerly the Pueblo of San Juan); Paiute Indian Tribe of Utah (Cedar Band of Paiutes, Kanosh Band of Paiutes, Koosharem Band of Paiutes, Indian Peaks Band of Paiutes, and Shivwits Band of Paiutes) (formerly Paiute Indian Tribe of Utah (Cedar City Band of Paiutes, Kanosh Band of Paiutes, Koosharem Band of Paiutes, Indian Peaks Band of Paiutes, and Shivwits Band of Paiutes)); Pawnee Nation of Oklahoma; Pueblo of Acoma, New Mexico; Pueblo of Cochiti, New Mexico; Pueblo of Laguna, New Mexico; Pueblo of Picuris, New Mexico; Pueblo of San Ildefonso, New Mexico; Pueblo of Sandia, New Mexico; Pueblo of Santa Ana, New Mexico; Pueblo of Santa Clara, New Mexico; Pueblo of Taos, New Mexico; Pueblo of Zia, New Mexico; Shoshone Tribe of the Wind River Reservation, Wyoming; Southern Ute Indian Tribe of the Southern Ute Indian Reservation, Colorado; Three Affiliated Tribes of the Fort Berthold Reservation, North Dakota; Ute Mountain Tribe of the Ute Mountain Reservation, Colorado, New Mexico & Utah; Wichita and Affiliated Tribes (Wichita, Keechi, Waco & Tawakonie), Oklahoma; Ysleta del Sur Pueblo of Texas; and the Zuni Tribe of the Zuni Reservation, New Mexico.

The Apache Tribe of Oklahoma; Kiowa Indian Tribe of Oklahoma; Oglala Sioux Tribe of the Pine Ridge Reservation, South Dakota; Pueblo of Isleta, New Mexico; Pueblo of Jemez, New Mexico; Pueblo of Nambe, New Mexico; Pueblo of Pojoaque, New Mexico; Pueblo of San Felipe, New Mexico; Pueblo of Tesuque, New Mexico; Rosebud Sioux Tribe of the Rosebud Indian Reservation, South Dakota; San Juan Southern Paiute Tribe of Arizona; Shoshone-Bannock Tribes of the Fort Hall Reservation of Idaho; Standing Rock Sioux Tribe of North & South Dakota; and the Ute Indian Tribe of the Uintah & Ouray Reservation, Utah, were invited to consult but did not respond.

History and Description of the Remains

In November 2011, human remains representing, at minimum, one individual were inadvertently discovered by a utility crew excavating a flow line within an active oil field owned by Chevron Oil Company in Rio Blanco County, CO. The Office of the State Archaeologist was notified and conferred with the Colorado Commission of Indian Affairs, the Ute Mountain Tribe of the Ute Mountain Reservation, Colorado, New Mexico & Utah, and the landowner. Because the unmarked burial was threatened, the remains were disinterred and transferred to History Colorado. They are identified as Office of Archaeology and Historic Preservation (OAHP) Case Number 282. Osteological analysis determined the remains are of Native American ancestry. No known individuals were identified. The five associated funerary objects are 1 round hammerstone, 2 bone pendants, 1 grayware pottery sherd, and 1 bone awl. The estimated antiquity is unknown.

At an unknown date, a schoolteacher obtained human remains representing, at minimum, one individual. In 2011, after the teacher retired, his successor discovered the remains in the classroom and turned them over to Jefferson County law enforcement, who notified the Office of the State Archaeologist. The remains were transferred to History Colorado in December 2011. They are identified as OAHP Case Number 283. The location from which the remains were removed is not known. Osteological analysis determined that the remains are of Native American ancestry. No known individuals were identified. No associated funerary objects are present. The estimated antiquity is unknown.

Sometime in 1987, human remains representing, at minimum, one individual were removed from Park County, CO, although the exact location is unknown. In 1988, the human remains were transferred to Dr. Michael Charney, a former professor at Colorado State University. Dr. Charney's analysis determined that they were not of forensic interest and that the remains are of Native American ancestry. He reported this to the Park County Coroner and retained the remains. In 1998, the remains were claimed as private property by the widow of Dr. Charney after his death. The human remains were subsequently taken into custody by the Larimer County Sheriff's Office. Following litigation in 2006, the remains were inadvertently returned to Park County because the box they were in stated they were of forensic interest. In December 2011, the Park County Coroner discovered the error and transferred the remains to History Colorado, who had previously received

a court order to repatriate all Native American human remains formerly in the possession of Dr. Charney, in accordance with Colorado State burial law and NAGPRA. They are identified as OAHP Case Number 284. Additional osteological analysis by History Colorado confirmed that the remains are of Native American ancestry. No known individuals were identified. No associated funerary objects are present. The estimated antiquity is unknown.

In August 2011, a private citizen reported a discovery of human remains representing, at minimum, one individual to the Clear Creek County coroner. They are identified as OAHP Case Number 285. They were found near the site of a house that had burned down in October 2010. The exact location of removal is unknown. The Office of the State Archaeologist was notified and the remains were transferred to History Colorado in December 2011. Osteological analysis determined that the remains are of Native American ancestry. No known individuals were identified. No associated funerary objects are present. The estimated antiquity is unknown.

Determinations Made by History Colorado

Officials at History Colorado have determined that:

- Pursuant to 25 U.S.C. 3001(2), a relationship of shared group identity cannot be reasonably traced between the Native American human remains described above and any present-day Indian tribe.
- Pursuant to 25 U.S.C. 3001(9), the human remains described above represent the physical remains of four individuals of Native American ancestry.
- Pursuant 25 U.S.C. 3001(3)(A), the five objects described above are reasonably believed to have been placed with or near the individual human remains at the time of death or later as a part of the death rite ceremony.

History Colorado has determined that the human remains are ''culturally unidentifiable'' under NAGPRA, 43 CFR 10.9 (e)(6). In 2006, History Colorado, in partnership with the Colorado Commission of Indian Affairs, Southern Ute Indian Tribe of the Southern Ute Reservation, Colorado, and the Ute Mountain Tribe of the Ute Mountain Reservation, Colorado, New Mexico & Utah, conducted consultations with the tribes that have ancestral ties to the state of Colorado to develop the process for disposition of culturally unidentifiable Native American human remains and associated funerary objects originating from inadvertent discoveries on Colorado state and private lands. As a result of the consultation, a process was developed, titled *Process for Consultation, Transfer, and Reburial of Culturally Unidentifiable Native American Human Remains and Associated Funerary Objects Originating From Inadvertent Discoveries on Colorado State and Private Lands,* (2008), (unpublished, on file with the Colorado Office of Archaeology and Historic Preservation).

OAHP 282 was recovered from Rio Blanco County, which is located in the Basin and Plateau Consultation Region, as established by the *Process.* Tribes with known aboriginal ties to this region and those who have asked to be notified of discoveries in the Basin and Plateau Consultation Region were invited to consult for OAHP 282. All tribes with ancestral ties to Colorado were invited to consult regarding OAHP 283–285, due to their vague provenience information.

The Native American Graves Protection and Repatriation Review Committee (Review Committee) is responsible for recommending specific actions for disposition of culturally unidentifiable human remains. On November 3–4, 2006, the *Process* was presented to the Review Committee for consideration. A January 8, 2007, letter on behalf of the Review Committee from the Designated Federal Officer transmitted the provisional authorization to proceed with the *Process* upon receipt of formal responses from the Jicarilla Apache Nation, New Mexico, and Kiowa Indian Tribe of Oklahoma, subject to forthcoming conditions imposed by the Secretary of the Interior. On May 15–16, 2008, the responses from the Jicarilla Apache Nation, New Mexico, and Kiowa Indian Tribe of Oklahoma were submitted to the Review Committee. On September 23, 2008, the Assistant Secretary for Fish and Wildlife and Parks, as the designee for the Secretary of the Interior, transmitted the authorization for the disposition of culturally unidentifiable human remains according to the *Process* and NAGPRA, pending publication of a Notice of Inventory Completion in the **Federal Register**. This notice fulfills that requirement.

43 CFR 10.11 was promulgated March 15, 2010, providing a process for the disposition of culturally unidentifiable Native American human remains recovered from tribal or aboriginal lands as established by the final judgment of the Indian Claims Commission or U.S. Court of Claims, a treaty, Act of Congress, or Executive Order, or other authoritative governmental sources. There is no evidence indicating that the human remains reported in this notice originated from tribal or aboriginal lands, making them eligible for disposition under the *Process.*

Additional Requestors and Disposition

Representatives of any other Indian tribe that believes itself to be culturally affiliated with the human remains should contact Sheila Goff, NAGPRA Liaison, History Colorado, 1200 Broadway, Denver, CO 80203, telephone (303) 866–4531, before August 20, 2012. Transfer of control of the human remains to the Southern Ute Indian Tribe of the Southern Ute Reservation, Colorado, and the Ute Mountain Tribe of the Ute Mountain Reservation, Colorado, New Mexico & Utah may proceed after that date if no additional claimants come forward.

History Colorado is responsible for notifying the Apache Tribe of Oklahoma; Arapahoe Tribe of the Wind River Reservation, Wyoming; Cheyenne and Arapaho Tribes, Oklahoma; Cheyenne River Sioux Tribe of the Cheyenne River Reservation, South Dakota; Comanche Nation, Oklahoma; Crow Creek Sioux Tribe of the Crow Creek Reservation, South Dakota; Crow Tribe of Montana; Fort Sill Apache Tribe of Oklahoma; Hopi Tribe of Arizona; Jicarilla Apache Nation, New Mexico; Kewa Pueblo, New Mexico (formerly Pueblo of Santo Domingo); Kiowa Indian Tribe of Oklahoma; Mescalero Apache Tribe of the Mescalero Reservation, New Mexico; Navajo Nation, Arizona, New Mexico & Utah; Northern Cheyenne Tribe of the Northern Cheyenne Indian Reservation, Montana; Oglala Sioux Tribe of the Pine Ridge Reservation, South Dakota; Ohkay Owingeh, New Mexico (formerly the Pueblo of San Juan); Paiute Indian Tribe of Utah (Cedar Band of Paiutes, Kanosh Band of Paiutes, Koosharem Band of Paiutes, Indian Peaks Band of Paiutes, and Shivwits Band of Paiutes) (formerly Paiute Indian Tribe of Utah (Cedar City Band of Paiutes, Kanosh Band of Paiutes, Koosharem Band of Paiutes, Indian Peaks Band of Paiutes, and Shivwits Band of Paiutes)); Pawnee Nation of Oklahoma; Pueblo of Acoma, New Mexico; Pueblo of Cochiti, New Mexico; Pueblo of Isleta, New Mexico; Pueblo of Jemez, New Mexico; Pueblo of Laguna, New Mexico; Pueblo of Nambe, New Mexico; Pueblo of Picuris, New Mexico; Pueblo of Pojoaque, New Mexico; Pueblo of San Felipe, New Mexico; Pueblo of San Ildefonso, New Mexico; Pueblo of Sandia, New Mexico; Pueblo of Santa Ana, New Mexico; Pueblo of Santa Clara, New Mexico; Pueblo of Taos, New Mexico; Pueblo of

Tesuque, New Mexico; Pueblo of Zia, New Mexico; Rosebud Sioux Tribe of the Rosebud Indian Reservation, South Dakota; San Juan Southern Paiute Tribe of Arizona; Shoshone-Bannock Tribes of the Fort Hall Reservation of Idaho; Shoshone Tribe of the Wind River Reservation, Wyoming; Southern Ute Indian Tribe of the Southern Ute Indian Reservation, Colorado; Standing Rock Sioux Tribe of North & South Dakota; Three Affiliated Tribes of the Fort Berthold Reservation, North Dakota; Ute Indian Tribe of the Uintah & Ouray Reservation, Utah; Ute Mountain Tribe of the Ute Mountain Reservation, Colorado, New Mexico & Utah; Wichita and Affiliated Tribes (Wichita, Keechi, Waco & Tawakonie), Oklahoma; Ysleta del Sur Pueblo of Texas; and the Zuni Tribe of the Zuni Reservation, New Mexico that this notice has been published.

Dated: June 27, 2012.

Sherry Hutt,

Manager, National NAGPRA Program.

[FR Doc. 2012–17631 Filed 7–18–12; 8:45 am]

BILLING CODE 4312–50–P

DEPARTMENT OF THE INTERIOR

National Park Service

[NPS–WASO–NAGPRA–10741; 2200–1100–665]

Notice of Inventory Completion: New York University College of Dentistry, New York, NY

AGENCY: National Park Service, Interior.

ACTION: Notice.

SUMMARY: The New York University College of Dentistry has completed an inventory of human remains, in consultation with the appropriate Indian tribes, and has determined that there is no cultural affiliation between the remains and any present-day Indian tribe. Representatives of any Indian tribe that believes itself to be culturally affiliated with the human remains may contact the New York University College of Dentistry. Disposition of the human remains to the Indian tribes stated below may occur if no additional requestors come forward.

DATES: Representatives of any Indian tribe that believes it has a cultural affiliation with the human remains should contact the New York University College of Dentistry at the address below by August 20, 2012.

ADDRESSES: Dr. Louis Terracio, New York University College of Dentistry, 345 East 24th St, New York, NY 10010, telephone (212) 998–9917.

SUPPLEMENTARY INFORMATION: Notice is here given in accordance with the Native American Graves Protection and Repatriation Act (NAGPRA), 25 U.S.C. 3003, of the completion of an inventory of human remains in the possession of the New York University College of Dentistry. The human remains were removed from Fresno County, CA.

This notice is published as part of the National Park Service's administrative responsibilities under NAGPRA, 25 U.S.C. 3003(d)(3) and 43 CFR 10.11(d). The determinations in this notice are the sole responsibility of the museum, institution, or Federal agency that has control of the Native American human remains. The National Park Service is not responsible for the determinations in this notice.

Consultation

A detailed assessment of the human remains was made by the New York University College of Dentistry professional staff in consultation with representatives of the Picayune Rancheria of Chukchansi Indians of California; Santa Rosa Indian Community of the Santa Rosa Rancheria, California; Table Mountain Rancheria of California; Tule River Indian Tribe of the Tule River Reservation, California; and the Tuolumne Band of Me-Wuk Indians of the Tuolumne Rancheria of California (hereafter referred to as ''The Tribes'').

History and Description of the Remains

At an unknown date, human remains representing, at minimum, one individual were removed from an unknown site in the city of Fresno, in Fresno County, CA. In 1923, the remains were catalogued into the collection of the Department of Physical Anthropology, Museum of the American Indian. In 1956, the remains were transferred to Dr. Theodore Kazamiroff, New York University College of Dentistry. No known individuals were identified. No associated funerary objects are present.

Determinations Made by the New York University College of Dentistry

Officials of the New York University College of Dentistry have determined that:

- Based on catalog information and forensic examination, the human remains are Native American.
- Pursuant to 25 U.S.C. 3001(2), a relationship of shared group identity cannot be reasonably traced between the Native American human remains and any present-day Indian tribe.
- According to final judgments of the Indian Claims Commission, the land from which the Native American human remains were removed is the aboriginal land of the Yokuts and southern Miwok, who are represented today by The Tribes.
- The unratified treaty of 1851 indicates that the land from which the Native American human remains were removed is the aboriginal land of the Yokuts and southern Miwok, who are represented today by The Tribes.
- Pursuant to 25 U.S.C. 3001(9), the human remains described in this notice represent the physical remains of one individual of Native American ancestry.
- Pursuant to 43 CFR 10.11(c)(1), the disposition of the human remains is to The Tribes.

Additional Requestors and Disposition

Representatives of any Indian tribe that believes itself to be culturally affiliated with the human remains or any other Indian tribe that believes it satisfies the criteria in 43 CFR 10.11(c)(1) should contact Dr. Louis Terracio, New York University College of Dentistry, 345 East 24th St, New York, NY 10010, telephone (212) 998–9917, before August 20, 2012. Disposition of the human remains to The Tribes may proceed after that date if no additional requestors come forward.

The New York University College of Dentistry is responsible for notifying The Tribes that this notice has been published.

Dated: June 28, 2012.

Sherry Hutt,

Manager, National NAGPRA Program.

[FR Doc. 2012–17645 Filed 7–18–12; 8:45 am]

BILLING CODE 4312–50–P

LEGAL SERVICES CORPORATION

Sunshine Act Meetings Notice

DATE AND TIME: The Legal Services Corporation's Board of Directors and its six committees will meet on July 27, 2012. The meetings will occur in the order noted below, with the first meeting commencing at 8:30 a.m., Eastern Daylight Time, and each meeting thereafter commencing promptly upon adjournment of the immediately preceding meeting. The exception will be the meetings of the Institutional Advancement Committee and the Audit Committee, which will run concurrently immediately upon conclusion of the meeting of the Governance and Performance Review Committee.

LOCATION: Sheraton Ann Arbor Hotel, 3200 Boardwalk Drive, Ann Arbor, Michigan 48108.

PUBLIC OBSERVATION: Unless otherwise noted herein, the Board and all committee meetings will be open to public observation. Members of the public who are unable to attend in person but wish to listen to the public proceedings may do so by following the telephone call-in directions provided below but are asked to keep their telephones muted to eliminate background noises. To avoid disrupting the meeting, please refrain from placing the call on hold. From time to time, the presiding Chair may solicit comments from the public.

CALL-IN DIRECTIONS FOR OPEN SESSIONS:

- Call toll-free number: 1–866–451–4981;
- When prompted, enter the following numeric pass code: 5907707348;
- When connected to the call, please immediately ''Mute'' your telephone.

Meeting Schedule

Friday, July 27, 2012	Time*
1. Governance & Performance Review Committee.	8:30 a.m.
2. Institutional Advancement Committee**.	
3. Audit Committee**.	
4. Finance Committee.	
5. Promotion & Provision for the Delivery of Legal Services Committee.	
6. Operations & Regulations Committee.	
7. Board of Directors.	

STATUS OF MEETING: Open, except as noted below.

Board of Directors—Open, except that, upon a vote of the Board of Directors, a portion of the meeting may be closed to the public to hear briefings by management and LSC's Inspector General, and to consider and act on the General Counsel's report on potential and pending litigation involving LSC.***

Institutional Advancement Committee—Open, except that, upon a vote of the Board of Directors, the meeting may be closed to the public to hear a briefing from a development consultant and to consider and act on a draft development plan for the Corporation.

A verbatim written transcript will be made of the closed session of the Board and Institutional Advancement Committee meetings. The transcript of any portions of the closed session falling within the relevant provisions of the Government in the Sunshine Act, 5 U.S.C. § 552b(c)(9) and (10), and the corresponding provision of the Legal Services Corporation's implementing regulations, 45 CFR 1622.5(g) and (h), will not be available for public inspection. A copy of the General Counsel's Certification that in his opinion the closing is authorized by law will be available upon request.

MATTERS TO BE CONSIDERED:

Governance & Performance Review Committee

1. Approval of agenda.
2. Approval of minutes of the Committee's meeting of April 15, 2012.
3. Staff report on certification letter sent to House and Senate Appropriations Committees.
4. Staff report on progress in implementing GAO recommendations.
5. Consider and act on other business.
6. Public comment.
7. Consider and act on motion to adjourn meeting.

Audit Committee

1. Approval of agenda.
2. Approval of minutes of the Committee's June 25, 2012 meeting.
3. Report on 403(b) annual plan review and update on annual audit.
   - Traci Higgins, Director, Office of Human Resources.
4. Consider and act on revised Audit Committee charter.
5. Briefing by Office of Inspector General.
   - Jeffrey Schanz, Inspector General.
6. Public comment.
7. Consider and act on other business.
8. Consider and act on adjournment of meeting.

Institutional Advancement Committee

Open Session

1. Approval of agenda.
2. Approval of minutes of the Committee's meeting of April 15, 2012.
3. Discussion of Committee work for August—September.
4. Public comment.
5. Consider and act on other business.

Closed Session

6. Briefing by Bob Osborne Development Consultant.
7. Consider and act on a draft Development Plan for the Corporation.
8. Consider and act on motion to adjourn the meeting.

Finance Committee

1. Approval of agenda.
2. Presentation on LSC's Financial Reports for the first eight months of FY 2012.
   - Presentation by David Richardson, Treasurer/Comptroller.
3. Consider and act on a Revised Consolidated Operating Budget for FY 2012, including internal budgetary adjustments and COB reallocation, and recommendation of Resolution 2012–XXX to the Board of Directors.
   - Presentation by David Richardson, Treasurer/Comptroller.
4. Review of the Guidelines for Adoption, Review and Modification of the Consolidated Operating Budget.
   - Presentation by David Richardson, Treasurer/Comptroller.
5. Discussion regarding the status of the FY 2013 appropriation process.
   - Carol Bergman, Director, Government Relations and Public Affairs.
6. Consider and act on recommendation to the Board of Directors for FY 2014 Budget Request.
   - Presentation by Carol Bergman, Director, Government Relations and Public Affairs.
   - Comments by David Richardson, Treasurer/Comptroller.
7. Public comment.
8. Consider and act on other business.
9. Consider and act on adjournment of meeting.

Promotion & Provision for the Delivery of Legal Services Committee

1. Approval of Agenda.
2. Approval of Minutes of the Committee's meeting of April 16, 2012.
3. Panel Presentation on diversification and expansion of revenue sources.
   - Moderator—Meredith McBurney, Resource Development Consultant for ABA Resource Center for Access to Justice Initiatives and Management Information Exchange.
   - Steven Gottlieb, Executive Director, Atlanta Legal Aid Society.
   - Daniel Glazier, Executive Director, Legal Services of Eastern Missouri.
   - Jennifer Bentley, Manager of Outreach and Development, Legal Services of South Central Michigan.
   - Deierdre Weir, Executive Director, Legal Aid and Defender Association.
4. Public comment.
5. Consider and act on other business.
6. Consider and act on motion to adjourn the meeting.

Operations & Regulations Committee

1. Approval of agenda.

* Please note that all times in this notice are in the Eastern Daylight Time.

** The meeting of the Institutional Advancement Committee will run concurrently with the meeting of the Audit Committee.

*** Any portion of the closed session consisting solely of briefings does not fall within the Sunshine Act's definition of the term ''meeting'' and, therefore, the requirements of the Sunshine Act do not apply to such portion of the closed session. 5 U.S.C. 552b(a)(2) and (b). *See also* 45 CFR 1622.2 and 1622.3.

2. Approval of minutes of the Committee's meeting of June 18, 2012.
3. Consider and act on proposed revisions to the Committee's charter.
4. Consider and act on possible revisions to the Corporation's Continuation of Operations Plan (''COOP'').
5. Consider and act on rulemaking on grant termination procedures, enforcement mechanisms, and suspension procedures.
▪ Mark Freedman, Senior Assistant General Counsel.
▪ Matthew Glover, Associate Counsel to the Inspector General.
▪ Public comment.
6. Public comment.
7. Consider and act on other business.
8. Consider and act on adjournment of meeting.

Board of Directors

1. Pledge of Allegiance.
2. Approval of agenda.
3. Approval of Minutes of the Board's meeting of May 21, 2012.
4. Presentation of the Report of the Pro Bono Task Force.
5. Consider and act on the draft Strategic Plan.
6. Chairman's Report.
7. Members' Reports.
8. President's Report.
9. Inspector General's Report.
10. Consider and act on the report of the Promotion and Provision for the Delivery of Legal Services Committee.
11. Consider and act on the report of the Finance Committee.
12. Consider and act on the report of the Audit Committee.
13. Consider and act on the report of the Operations and Regulations Committee.
14. Consider and act on the report of the Governance and Performance Review Committee.
15. Consider and act on the report of the Institutional Advancement Committee.
16. Consider and act on delegation of authority to the LSC Board Chairman to appoint non-directors to serve on LSC Board committees.
17. Consider and act on a resolution acknowledging the recent passing of former LSC Board member Thomas A. Fuentes.
18. Public comment.
19. Consider and act on other business.
20. Consider and act on whether to authorize an executive session of the Board to address items listed below, under Closed Session.

Closed Session

21. Approval of minutes of the Board's closed session meeting of April 16, 2012.
22. Briefing by Management.
23. Briefing by the Inspector General.
24. Consider and act on General Counsel's report on potential and pending litigation involving LSC.
25. Consider and act on motion to adjourn meeting.

CONTACT PERSON FOR INFORMATION: Katherine Ward, Executive Assistant to the Vice President & General Counsel, at (202) 295–1500. Questions may be sent by electronic mail to *FR_NOTICE_QUESTIONS@lsc.gov.*.

NON-CONFIDENTIAL MEETING MATERIALS: Non-confidential meeting materials will be made available in electronic format at least 24 hours in advance of the meeting on the LSC Web site, at *http://www.lsc.gov/board-directors/meetings/board-meeting-notices/non-confidential-materials-be-considered-open-session*.

ACCESSIBILITY: LSC complies with the American's with Disabilities Act and Section 504 of the 1973 Rehabilitation Act. Upon request, meeting notices and materials will be made available in alternative formats to accommodate individuals with disabilities. Individuals who need other accommodations due to disability in order to attend the meeting in person or telephonically should contact Katherine Ward, at (202) 295–1500 or *FR_NOTICE_QUESTIONS@lsc.gov*, at least 2 business days in advance of the meeting. If a request is made without advance notice, LSC will make every effort to accommodate the request but cannot guarantee that all requests can be fulfilled.

Dated: July 17, 2012.

Victor M. Fortuno,
Vice President & General Counsel.

[FR Doc. 2012–17775 Filed 7–17–12; 4:15 pm]

BILLING CODE 7050–01–P

NATIONAL CREDIT UNION ADMINISTRATION

Sunshine Act Meetings

TIME AND DATE: 10:00 a.m., Tuesday, July 24, 2012.

PLACE: Board Room, 7th Floor, Room 7047, 1775 Duke Street (All visitors must use Diagonal Road Entrance), Alexandria, VA 22314–3428.

STATUS: Open.

MATTERS TO BE CONSIDERED:
1. Board Briefing—Interagency Proposal, Truth in Lending Act.
2. Interest Rate Ceiling Determination.
3. NCUA's Rules and Regulations, ''Troubled Condition'' Definition.
4. NCUA's Rules and Regulations, Access to Emergency Liquidity.
5. 2012 Temporary Corporate Credit Union Stabilization Fund Assessment.
6. Quarterly Insurance Fund Report.
7. Reprogramming of NCUA's Operating Budget for 2012.

FOR FURTHER INFORMATION CONTACT: Mary Rupp, Secretary of the Board, Telephone: 703–518–6304.

Mary Rupp,
Board Secretary.

[FR Doc. 2012–17778 Filed 7–17–12; 4:15 pm]

BILLING CODE 7535–01–P

NATIONAL SCIENCE FOUNDATION

Notice of Permits Issued Under the Antarctic Conservation Act of 1978

AGENCY: National Science Foundation.

ACTION: Notice of permits issued under the Antarctic Conservation of 1978, Public Law 95–541.

SUMMARY: The National Science Foundation (NSF) is required to publish notice of permits issued under the Antarctic Conservation Act of 1978. This is the required notice.

FOR FURTHER INFORMATION CONTACT: Nadene G. Kennedy, Permit Office, Office of Polar Programs, Rm. 755, National Science Foundation, 4201 Wilson Boulevard, Arlington, VA 22230.

SUPPLEMENTARY INFORMATION: On June 1, 2012, the National Science Foundation published a notice in the **Federal Register** of a permit application received. The permit was issued on July 13, 2012 to: Gerald Kooyman, Permit No. 2013–006.

Nadene G. Kennedy,
Permit Officer.

[FR Doc. 2012–17538 Filed 7–18–12; 8:45 am]

BILLING CODE 7555–01–P

POSTAL REGULATORY COMMISSION

[Docket Nos. MC2012–32 and CP2012–40; Order No. 1403]

Product List Change

AGENCY: Postal Regulatory Commission.

ACTION: Notice.

SUMMARY: The Commission is noticing a recently-filed Postal Service request to add Parcel Select Contract 3 to the competitive product list. This notice addresses procedural steps associated with these filings.

DATES: *Comments are due:* July 23, 2012.

ADDRESSES: Submit comments electronically via the Commission's

Filing Online system at *http://www.prc.gov.* Commenters who cannot submit their views electronically should contact the person identified in **FOR FURTHER INFORMATION CONTACT** by telephone for advice on alternatives to electronic filing.

FOR FURTHER INFORMATION CONTACT: Stephen L. Sharfman, General Counsel at 202–789–6820.

SUPPLEMENTARY INFORMATION:

Table of Contents

I. Introduction
II. Notice of Filings
III. Ordering Paragraphs

I. Introduction

In accordance with 39 U.S.C. 3642 and 39 CFR 3020.30 *et seq.,* the Postal Service filed a formal request and associated supporting information to add Parcel Select Contract 3 to the competitive product list.[1] The Postal Service asserts that Parcel Select Contract 3 is a competitive product ''not of general applicability'' within the meaning of 39 U.S.C. 3632(b)(3). Request at 1. The Request has been assigned Docket No. MC2012–32.

The Postal Service contemporaneously filed a redacted contract related to the proposed new product under 39 U.S.C. 3632(b)(3) and 39 CFR 3015.5. *Id.* Attachment B. The instant contract has been assigned Docket No. CP2012–40.

Request. To support its Request, the Postal Service filed six attachments as follows:

- Attachment A—a redacted copy of Governors' Decision No. 11–6, authorizing the new product;
- Attachment B—a redacted copy of the contract;
- Attachment C—proposed changes to the Mail Classification Schedule competitive product list with the addition underlined;
- Attachment D—a Statement of Supporting Justification as required by 39 CFR 3020.32;
- Attachment E—a certification of compliance with 39 U.S.C. 3633(a); and
- Attachment F—an application for non-public treatment of materials to maintain redacted portions of the contract and related financial information under seal.

In the Statement of Supporting Justification, Karen F. Key, Manager, Shipping Products, asserts that the contract will cover its attributable costs, make a positive contribution to covering institutional costs, and increase contribution toward the requisite 5.5 percent of the Postal Service's total institutional costs. *Id.* Attachment D at 1. Ms. Key contends that there will be no issue of market dominant products subsidizing competitive products as a result of this contract. *Id.*

Related contract. The Postal Service included a redacted version of the related contract with the Request. *Id.* Attachment B. The contract is scheduled to become effective on the later of the following dates: (1) The day after the Commission issues all necessary regulatory approval; or (2) August 1, 2012. *Id.* at 7. The contract will expire July 31, 2015, unless, among other things, either party terminates the agreement upon 3 months' written notice to the other party. *Id.* The Postal Service represents that the contract is consistent with 39 U.S.C. 3633(a). *Id.* Attachment D.

The Postal Service filed much of the supporting materials, including the related contract, under seal. *Id.* Attachment F. It maintains that the redacted portions of the contract, customer-identifying information, and related financial information, should remain confidential. *Id.* at 3. This information includes the price structure, underlying costs and assumptions, pricing formulas, information relevant to the customer's mailing profile, and cost coverage projections. *Id.* The Postal Service asks the Commission to protect customer-identifying information from public disclosure indefinitely. *Id.* at 7.

II. Notice of Filings

The Commission establishes Docket Nos. MC2012–32 and CP2012–40 to consider the Request pertaining to the proposed Parcel Select Contract 3 product and the related contract, respectively.

Interested persons may submit comments on whether the Postal Service's filings in the captioned dockets are consistent with the policies of 39 U.S.C. 3632, 3633, or 3642, 39 CFR 3015.5, and 39 CFR part 3020, subpart B. Comments are due no later than July 23, 2012. The public portions of these filings can be accessed via the Commission's Web site (*http://www.prc.gov*).

The Commission appoints Natalie Rea Ward to serve as Public Representative in these dockets.

III. Ordering Paragraphs

It is ordered:

1. The Commission establishes Docket Nos. MC2012–32 and CP2012–40 to consider the matters raised in each docket.

2. Pursuant to 39 U.S.C. 505, Natalie Rea Ward is appointed to serve as an officer of the Commission (Public Representative) to represent the interests of the general public in these proceedings.

3. Comments by interested persons in these proceedings are due no later than July 23, 2012.

4. The Secretary shall arrange for publication of this order in the **Federal Register**.

By the Commission.

Ruth Ann Abrams,

Acting Secretary.

[FR Doc. 2012–17605 Filed 7–18–12; 8:45 am]

BILLING CODE 7710–FW–P

[1] Request of the United States Postal Service to Add Parcel Select Contract 3 to Competitive Product List and Notice of Filing (Under Seal) of Unredacted Governors' Decision, Contract, and Supporting Data, July 12, 2012 (Request).

SECURITIES AND EXCHANGE COMMISSION

[Investment Company Act Release No. 30137; 812–13906]

The Dreyfus Corporation, et al.; Notice of Application

July 12, 2012.

AGENCY: Securities and Exchange Commission (''Commission'').

ACTION: Notice of an application for an order under section 12(d)(1)(J) of the Investment Company Act of 1940 (the ''Act'') for an exemption from sections 12(d)(1)(A) and (B) of the Act, under sections 6(c) and 17(b) of the Act for an exemption from sections 17(a)(1) and (2) of the Act, and under section 6(c) of the Act for an exemption from rule 12d1–2(a) under the Act.

SUMMARY OF THE APPLICATION: The requested order would (a) permit certain registered management investment companies and unit investment trusts to acquire shares of certain registered open-end management investment companies that are outside the same group of investment companies as the acquiring investment companies, and (b) permit funds of funds relying on rule 12d1–2 under the Act to invest in certain financial instruments.

APPLICANTS: Advantage Funds, Inc., BNY Mellon Funds Trust, Dreyfus Appreciation Fund, Inc., Dreyfus BASIC U.S. Mortgage Securities Fund, Dreyfus Bond Funds, Inc., Dreyfus Funds, Inc., Dreyfus Growth and Income Fund, Inc., Dreyfus Intermediate Municipal Bond Fund, Inc., Dreyfus Index Funds, Inc., Dreyfus International Funds, Inc., Dreyfus Investment Funds, Dreyfus Investment Grade Funds, Inc., Dreyfus LifeTime Portfolios, Inc., Dreyfus Manager Funds I, Dreyfus Manager Funds II, Dreyfus Midcap Index Fund,

Inc., Dreyfus Municipal Bond Opportunity Fund, Dreyfus Municipal Funds, Inc., Dreyfus New Jersey Municipal Bond Fund, Inc., Dreyfus New York AMT-Free Municipal Bond Fund, Dreyfus New York Tax Exempt Bond Fund, Inc., Dreyfus Opportunity Funds, Dreyfus Premier California AMT-Free Municipal Bond Fund, Inc., Dreyfus Premier GNMA Fund, Inc., Dreyfus Premier Investment Funds, Inc., Dreyfus Premier Short-Intermediate Municipal Bond Fund, Dreyfus Premier Worldwide Growth Fund, Inc., Dreyfus Research Growth Fund, Inc., Dreyfus Short-Intermediate Government Fund, Dreyfus State Municipal Bond Funds, Dreyfus Stock Funds, Dreyfus U.S. Treasury Intermediate Term Fund, Dreyfus U.S. Treasury Long Term Fund, Strategic Funds, Inc., The Dreyfus Fund Incorporated, The Dreyfus/Laurel Funds, Inc., The Dreyfus/Laurel Funds Trust, and The Dreyfus Third Century Fund, Inc. (each, a ''Company,'' and collectively, the ''Companies''), The Dreyfus Corporation (the ''Adviser'') and MBSC Securities Corporation (the ''Distributor'').

DATES: *Filing Dates:* The application was filed on May 23, 2011, and amended on August 18, 2011, and May 11, 2012.

HEARING OR NOTIFICATION OF HEARING: An order granting the application will be issued unless the Commission orders a hearing. Interested persons may request a hearing by writing to the Commission's Secretary and serving applicants with a copy of the request, personally or by mail. Hearing requests should be received by the Commission by 5:30 p.m. on August 6, 2012, and should be accompanied by proof of service on applicants, in the form of an affidavit or, for lawyers, a certificate of service. Hearing requests should state the nature of the writer's interest, the reason for the request, and the issues contested. Persons who wish to be notified of a hearing may request notification by writing to the Commission's Secretary.

ADDRESSES: Secretary, U.S. Securities and Exchange Commission, 100 F Street NE., Washington, DC 20549–1090. Applicants, c/o The Dreyfus Corporation, 200 Park Avenue, New York, New York 10166.

FOR FURTHER INFORMATION CONTACT: Emerson S. Davis, Senior Counsel, at (202) 551–6868, or Daniele Marchesani, Branch Chief, at (202) 551–6821 (Division of Investment Management, Office of Investment Company Regulation).

SUPPLEMENTARY INFORMATION: The following is a summary of the application. The complete application may be obtained via the Commission's Web site by searching for the file number, or an applicant using the Company name box, at *http://www.sec.gov/search/search.htm* or by calling (202) 551–8090.

Applicants' Representations

1. The Companies are open-end management investment companies registered under the Act and organized as either a Massachusetts business trust or a Maryland corporation. Each Company or Company's separate series pursues distinct investment objectives and strategies. The Adviser, a New York corporation, is registered as an investment adviser under the Investment Advisers Act of 1940 (''Advisers Act'') and serves as investment adviser to the Companies.[1] The Distributor is a New York corporation and is registered as a broker-dealer under the Securities Exchange Act of 1934 (the ''Exchange Act''). The Distributor serves as the distributor for the Companies.

2. Applicants request an exemption to permit registered management investment companies and unit investments trusts that operate as a ''fund of funds'' and that are not part of the same ''group of investment companies,'' within the meaning of section 12(d)(1)(G)(ii) of the Act, as the Companies (''Unrelated Funds of Funds'') to acquire shares of the Companies or separate series of the Companies that do not operate as ''funds of funds'' (''Underlying Funds'')[2] in excess of the limits in

[1] All references to the term ''Adviser'' include successors-in-interest to the Adviser. Successors-in-interest are limited to any entity resulting from a name change, a reorganization of the Adviser into another jurisdiction or a change in the type of business organization.

[2] The Underlying Funds currently include the following Companies or series thereof: Advantage Funds, Inc., on behalf of its series Dreyfus Global Absolute Return Fund, Dreyfus Global Dynamic Bond Fund, Dreyfus Global Real Return Fund, Dreyfus International Value Fund, Dreyfus Opportunistic Midcap Value Fund, Dreyfus Opportunistic Small Cap Fund, Dreyfus Opportunistic U.S. Stock Fund, Dreyfus Strategic Value Fund, Dreyfus Structured Midcap Fund, Dreyfus Technology Growth Fund, Dreyfus Total Emerging Markets Fund, Dreyfus Total Return Advantage Fund and Global Alpha Fund; BNY Mellon Funds Trust, on behalf of its series BNY Mellon Bond Fund, BNY Mellon Corporate Bond Fund, BNY Mellon Emerging Markets Fund, BNY Mellon Focused Equity Opportunities Fund, BNY Mellon Income Stock Fund, BNY Mellon Intermediate Bond Fund, BNY Mellon Intermediate U.S. Government Fund, BNY Mellon International Appreciation Fund, BNY Mellon International Equity Income Fund, BNY Mellon International Fund, BNY Mellon Large Cap Stock Fund, BNY Mellon Massachusetts Intermediate Municipal Bond Fund, BNY Mellon Mid Cap Stock Fund, BNY Mellon Municipal Opportunities Fund, BNY Mellon National Intermediate Municipal Bond Fund, BNY Mellon National Short-Term Municipal Bond Fund, BNY Mellon New York Intermediate Tax-Exempt Bond Fund, BNY Mellon Pennsylvania Intermediate Municipal Bond Fund, BNY Mellon Short-Term U.S. Government Securities Fund, BNY Mellon Small Cap Stock Fund, BNY Mellon Small/Mid Cap Fund and BNY Mellon U.S. Core Equity 130/30 Fund; Dreyfus Appreciation Fund, Inc.; Dreyfus BASIC U.S. Mortgage Securities Fund; Dreyfus Bond Funds, Inc., on behalf of its series Dreyfus Municipal Bond Fund; Dreyfus Funds, Inc., on behalf of its series Dreyfus Mid-Cap Growth Fund; Dreyfus Growth and Income Fund, Inc.; Dreyfus Index Funds, Inc., on behalf of its series Dreyfus International Stock Index Fund, Dreyfus S&P 500 Index Fund and Dreyfus Smallcap Stock Index Fund; Dreyfus Intermediate Municipal Bond Fund, Inc.; Dreyfus International Funds, Inc., on behalf of its series Dreyfus Brazil Equity Fund and Dreyfus Emerging Markets Fund; Dreyfus Investment Funds, on behalf of its series Dreyfus/The Boston Company Large Cap Core Fund, Dreyfus/The Boston Company Small Cap Value Fund, Dreyfus/The Boston Company Small Cap Growth Fund, Dreyfus/The Boston Company Small/Mid Cap Growth Fund, Dreyfus/The Boston Company Small Cap Tax-Sensitive Equity Fund, Dreyfus/The Boston Company Emerging Markets Core Equity Fund, Dreyfus/Standish Fixed Income Fund, Dreyfus/Standish Global Fixed Income Fund, Dreyfus/Standish International Fixed Income Fund, Dreyfus/Standish Intermediate Tax Exempt Bond Fund and Dreyfus/Newton International Equity Fund; Dreyfus Investment Grade Funds, Inc., on behalf of its series Dreyfus Intermediate Term Income Fund, Dreyfus Short Term Income Fund and Dreyfus Inflation Adjusted Securities Fund; Dreyfus LifeTime Portfolios, Inc., on behalf of its series Growth and Income Portfolio; Dreyfus Manager Funds I, on behalf of its series Dreyfus MidCap Core Fund; Dreyfus Manager Funds II, on behalf of its series Dreyfus Balanced Opportunity Fund; Dreyfus Midcap Index Fund, Inc.; Dreyfus Municipal Bond Opportunity Fund; Dreyfus Municipal Funds, Inc., on behalf of its series Dreyfus AMT-Free Municipal Bond Fund and Dreyfus High Yield Municipal Bond Fund; Dreyfus New Jersey Municipal Bond Fund, Inc.; Dreyfus New York AMT-Free Municipal Bond Fund; Dreyfus New York Tax Exempt Bond Fund, Inc.; Dreyfus Opportunity Funds, on behalf of its series Dreyfus Natural Resources Fund; Dreyfus Premier California AMT-Free Municipal Bond Fund, Inc., on behalf of its series Dreyfus California AMT-Free Municipal Bond Fund; Dreyfus Premier GNMA Fund, Inc., on behalf of its series Dreyfus GNMA Fund; Dreyfus Premier Investment Funds, Inc., on behalf of its series Dreyfus Emerging Asia Fund, Dreyfus Global Real Estate Securities Fund, Dreyfus Greater China Fund, Dreyfus India Fund, Dreyfus Large Cap Equity Fund and Dreyfus Large Cap Growth Fund; Dreyfus Premier Short-Intermediate Municipal Bond Fund, on behalf of its series Dreyfus Short-Intermediate Municipal Bond Fund; Dreyfus Premier Worldwide Growth Fund, Inc., on behalf of its series Dreyfus Worldwide Growth Fund; Dreyfus Research Growth Fund, Inc.; Dreyfus Short-Intermediate Government Fund; Dreyfus State Municipal Bond Funds, on behalf of its series Dreyfus Connecticut Fund, Dreyfus Maryland Fund, Dreyfus Massachusetts Fund, Dreyfus Minnesota Fund, Dreyfus Ohio Fund and Dreyfus Pennsylvania Fund; Dreyfus Stock Funds, on behalf of its series Dreyfus Small Cap Equity Fund and Dreyfus International Equity Fund; Dreyfus U.S. Treasury Intermediate Term Fund; Dreyfus U.S. Treasury Long Term Fund; Strategic Funds, Inc., on behalf of its series Dreyfus Active MidCap Fund, Global Stock Fund, International Stock Fund, Dreyfus U.S. Equity Fund, Dreyfus Select Managers Small Cap Value Fund and Dreyfus Select Managers Small Cap Growth Fund; The Dreyfus Fund

Continued

section 12(d)(1)(A) of the Act, and to permit the Underlying Funds, the Distributor (or any principal underwriter for an Underlying Fund), and any broker or dealer registered under the Exchange Act (''Broker'') to sell shares of an Underlying Fund to an Unrelated Fund of Funds in excess of the limits in section 12(d)(1)(B) of the Act. Applicants request that the relief apply to: (1) Each registered open-end management investment company or series thereof that currently or subsequently is part of the same ''group of investment companies,'' within the meaning of section 12(d)(1)(G)(ii) of the Act, as the Companies, and that is advised or sponsored by the Adviser or any entity controlling, controlled by, or under common control with the Adviser (such registered open-end management investment companies or their series are included in the term ''Underlying Funds''); (2) each Unrelated Fund of Funds that enters into a Participation Agreement (as defined below) with an Underlying Fund to purchase shares of the Underlying Fund; and (3) any principal underwriter to an Underlying Fund or Broker selling shares of an Underlying Fund.[3]

3. Each Unrelated Fund of Funds will be advised by or, in the case of a unit investment company, sponsored by, an investment adviser, within the meaning of section 2(a)(20)(A) of the Act, that is registered as an investment adviser under the Advisers Act (an ''Unrelated Fund of Funds Adviser or Unrelated Fund of Funds Sponsor, respectively''). An Unrelated Fund of Funds or its Unrelated Fund of Funds Adviser or Unrelated Fund of Funds Sponsor may contract with an investment adviser, including the Adviser or its affiliates, that meets the definition of section 2(a)(20)(B) of the Act (an ''Unrelated Fund of Funds Subadviser''). Applicants state that Unrelated Funds of Funds will be interested in using the Underlying Funds as part of their overall investment strategy.

4. Applicants also request an exemption to the extent necessary to permit any existing or future funds that operate as ''funds of funds'' and that are part of the same ''group of investment companies,'' within the meaning of section 12(d)(1)(G)(ii) of the Act, as the Companies (''Related Funds of Funds'') and which invest in other Underlying Funds in reliance on section 12(d)(1)(G) of the Act, and which are also eligible to invest in securities (as defined in section 2(a)(36) of the Act) in reliance on rule 12d1–2 under the Act, also to invest, consistent with their investment objective, policies, strategies and limitations, in financial instruments that may not be securities within the meaning of section 2(a)(36) of the Act (''Other Investments'').[4]

5. Consistent with its fiduciary obligations under the Act, each Related Fund of Fund's board of trustees will review the advisory fees charged by the Related Fund of Fund's investment adviser to ensure that they are based on services provided that are in addition to, rather than duplicative of, services provided pursuant to the advisory agreement of any investment company in which the Related Fund of Funds may invest.

Applicants' Legal Analysis

Investments in Underlying Funds by Unrelated Funds of Funds

A. Section 12(d)(1)

1. Section 12(d)(1)(A) of the Act, in relevant part, prohibits a registered investment company from acquiring shares of an investment company if the securities represent more than 3% of the total outstanding voting stock of the acquired company, more than 5% of the total assets of the acquiring company, or, together with the securities of any other investment companies, more than 10% of the total assets of the acquiring company. Section 12(d)(1)(B) of the Act prohibits a registered open-end investment company, its principal underwriter, and any broker or dealer from selling the investment company's shares to another investment company if the sale will cause the acquiring company to own more than 3% of the acquired company's voting stock, or if the sale will cause more than 10% of the acquired company's voting stock to be owned by investment companies generally.

2. Section 12(d)(1)(J) of the Act provides that the Commission may exempt any person, security, or transaction, or any class or classes of persons, securities or transactions, from any provision of section 12(d)(1) if the exemption is consistent with the public interest and the protection of investors. Applicants is seeking an exemption under section 12(d)(1)(J) of the Act to permit Unrelated Funds of Funds to acquire shares of the Underlying Funds in excess of the limits in section 12(d)(1)(A), and an Underlying Fund, any principal underwriter for an Underlying Fund, and any Broker to sell shares of an Underlying Fund to an Unrelated Fund of Funds in excess of the limits in section 12(d)(1)(B) of the Act.

3. Applicants state that the terms and conditions of the application appropriately address the concerns underlying sections 12(d)(1)(A) and (B), which include concerns about undue influence by a fund of funds over underlying funds, excessive layering of fees, and overly complex fund structures. Accordingly, applicants believe that the requested exemption is consistent with the public interest and the protection of investors.

4. Applicants believe that neither an Unrelated Fund of Funds nor an Unrelated Fund of Funds Affiliate would be able to exert undue influence over the Underlying Funds.[5] To limit the control that a Unrelated Fund of Funds may have over an Underlying Fund, applicants propose a condition prohibiting the Unrelated Fund of Funds Adviser or Unrelated Fund of Funds Sponsor, any person controlling, controlled by, or under common control

Incorporated; The Dreyfus/Laurel Funds, Inc., on behalf of its series Dreyfus BASIC S&P 500 Stock Index Fund, Dreyfus Bond Market Index Fund, Dreyfus Core Equity Fund, Dreyfus Disciplined Stock Fund, Dreyfus Opportunistic Fixed Income Fund, Dreyfus Small Cap Fund and Dreyfus Tax Managed Growth Fund; The Dreyfus/Laurel Funds Trust, on behalf of its series Dreyfus Emerging Markets Debt Local Currency Fund, Dreyfus Equity Income Fund, Dreyfus Global Equity Income Fund, Dreyfus High Yield Fund and Dreyfus International Bond Fund; and The Dreyfus Third Century Fund, Inc. The Related Funds of Funds (as defined below) currently include: BNY Mellon Funds Trust, on behalf of its series BNY Mellon Asset Allocation Fund, BNY Mellon Large Cap Market Opportunities Fund and BNY Mellon Tax-Sensitive Large Cap Multi-Strategy Fund; Strategic Funds, Inc., on behalf of its series Dreyfus Conservative Allocation Fund, Dreyfus Moderate Allocation Fund and Dreyfus Growth Allocation Fund; and Dreyfus Premier Investment Funds, Inc., on behalf of its series Dreyfus Diversified International Fund and Dreyfus Satellite Alpha Fund.

[3] All entities that currently intend to rely on the requested order are named as applicants. Any other entity that relies on the order in the future will comply with the terms and conditions of the application. An Unrelated Fund of Funds may rely on the requested order only to invest in an Underlying Fund and not in any other registered investment company.

[4] Applicants request that the relief apply to each registered open-end management investment company or series thereof that operates as a ''fund of funds'' and that currently or subsequently is part of the same ''group of investment companies,'' within the meaning of section 12(d)(1)(G)(ii) of the Act, as the Companies, and is advised or sponsored by the Adviser or any entity controlling, controlled by or under common control with the Adviser (such registered open-end management investment companies or their series are included in the term ''Related Fund of Funds'').

[5] An ''Unrelated Fund of Funds Affiliate'' is an Unrelated Fund of Funds Adviser, Unrelated Fund of Funds Sponsor, Unrelated Fund of Funds Subadviser, promoter, or principal underwriter of an Unrelated Fund of Funds, and any person controlling, controlled by, or under common control with any of those entities. An ''Underlying Fund Affiliate'' is an investment adviser, sponsor, promoter, or principal underwriter of an Underlying Fund, and any person controlling, controlled by, or under common control with any of those entities.

with the Unrelated Fund of Funds Adviser or Unrelated Fund of Funds Sponsor, and any investment company or issuer that would be an investment company but for section 3(c)(1) or 3(c)(7) of the Act that is advised by the Unrelated Fund of Funds Adviser or sponsored by the Unrelated Fund of Funds Sponsor or any person controlling, controlled by, or under common control with the Unrelated Fund of Funds Adviser or Unrelated Fund for Funds Sponsor (the ''Unrelated Fund of Funds Advisory Group'') from controlling (individually or in the aggregate) an Underlying Fund within the meaning of section 2(a)(9) of the Act. The same prohibition would apply to the Unrelated Fund of Funds Subadviser, any person controlling, controlled by or under common control with the Unrelated Fund of Funds Subadviser, and any investment company or issuer that would be an investment company but for section 3(c)(1) or 3(c)(7) of the Act (or portion of such investment company or issuer) advised or sponsored by the Unrelated Fund of Funds Subadviser or any person controlling, controlled by or under common control with the Unrelated Fund of Funds Subadviser (the ''Unrelated Fund of Funds Subadvisory Group''). Applicants propose other conditions to limit the potential for undue influence over the Underlying Funds, including that no Unrelated Fund of Funds or Unrelated Fund of Funds Affiliate (except to the extent it is acting in its capacity as an investment adviser to an open-end fund) will cause an Underlying Fund to purchase a security in an offering of securities during the existence of any underwriting or selling syndicate of which a principal underwriter is an Underwriting Affiliate (''Affiliated Underwriting''). An ''Underwriting Affiliate'' is a principal underwriter in any underwriting or selling syndicate that is an officer, director, member of an advisory board, investment adviser, subadviser, sponsor, or employee of the Unrelated Fund of Funds, or a person of which any such officer, director, member of an advisory board, investment adviser, subadviser, sponsor, or employee is an affiliated person. An Underwriting Affiliate does not include any person whose relationship to an Underlying Fund is covered by section 10(f) of the Act.

5. Applicants do not believe that the proposed fund of funds arrangement will involve excessive layering of fees. The board of directors or trustees of each Unrelated Fund of Funds, including a majority of the directors or trustees who are not ''interested persons'' (within the meaning of section 2(a)(19) of the Act) (''Independent Board Members''), will find that the advisory fees charged under such advisory contract are based on services provided that will be in addition to, rather than duplicative of, the services provided under the advisory contract(s) of any Underlying Fund in which the Unrelated Fund of Funds may invest. In addition, an Unrelated Fund of Funds Adviser or Unrelated Fund of Funds Sponsor will waive fees otherwise payable to it by the Unrelated Fund of Funds in an amount at least equal to any compensation (including fees received pursuant to any plan adopted by an Underlying Fund under rule 12b–1 under the Act) received from an Underlying Fund by the Unrelated Fund of Funds Adviser or Unrelated Fund of Funds Sponsor or an affiliated person of the Unrelated Fund of Funds Adviser or Unrelated Fund of Funds Sponsor, other than any advisory fees paid to the Unrelated Fund of Funds Adviser or Unrelated Fund of Funds Sponsor or affiliated person of the Unrelated Fund of Funds Adviser or Unrelated Fund of Funds Sponsor, by an Underlying Fund, in connection with the investment by the Unrelated Fund of Funds in the Underlying Fund. Applicants also state that with respect to registered separate accounts that invest in an Unrelated Fund of Funds, no sales load will be charged at the Unrelated Fund of Funds level or at the Underlying Fund level.[6] Other sales charges and service fees, as defined in Rule 2830 of the Conduct Rules of the NASD (''NASD Conduct Rules''), if any, will only be charged at the Unrelated Fund of Funds level or at the Underlying Fund level, not both. With respect to other investments in an Unrelated Fund of Funds, any sales charges and/or service fees charged with respect to shares of the Unrelated Fund of Funds will not exceed the limits applicable to a fund of funds as set forth in Rule 2830 of the NASD Conduct Rules.

6. Applicants submit that the proposed arrangement will not create an overly complex fund structure. Applicants note that no Underlying Fund will acquire securities of any investment company or company relying on section 3(c)(1) or 3(c)(7) of the Act in excess of the limits contained in section 12(d)(1)(A) of the Act, except in certain circumstances identified in condition 12 below. Applicants also represent that to ensure that Unrelated Funds of Funds comply with the terms and conditions of the requested exemption from section 12(d)(1)(A) of the Act, an Unrelated Fund of Funds must enter into a participation agreement between a Company, on behalf of the relevant Underlying Fund, and the Unrelated Funds of Funds (''Participation Agreement'') before investing in an Underlying Fund in excess of the limits in section 12(d)(1)(A). The Participation Agreement will require the Unrelated Fund of Funds to adhere to the terms and conditions of the requested order. The Participation Agreement will include an acknowledgment from the Unrelated Fund of Funds that it may rely on the requested order only to invest in the Underlying Funds and not in any other registered investment company or series thereof.

B. Section 17(a)

1. Section 17(a) of the Act generally prohibits sales or purchases of securities between a registered investment company and any affiliated person of the company. Section 2(a)(3) of the Act defines an ''affiliated person'' of another person to include any person 5% or more of whose outstanding voting securities are directly or indirectly owned, controlled, or held with power to vote by the other person.

2. Applicants seek relief from section 17(a) to permit an Underlying Fund that is an affiliated person of an Unrelated Fund of Funds because the Unrelated Fund of Funds holds 5% or more of the Underlying Fund's shares to sell its shares to and redeem its shares from an Unrelated Fund of Funds. Applicants state that any proposed transactions directly between an Underlying Fund and an Unrelated Fund of Funds will be consistent with the policies of each Underlying Fund and Unrelated Fund of Funds. The Participation Agreement will require any Unrelated Fund of Funds that purchases shares from an Underlying Fund to represent that the purchase of shares from the Underlying Fund by a Unrelated Fund of Funds will be accomplished in compliance with the investment restrictions of the Unrelated Fund of Funds and will be consistent with the investment policies set forth in the Unrelated Fund of Funds' registration statement.

[6] Applicants represent that each Unrelated Fund of Funds will represent in the Participation Agreement (as defined below) that no insurance company sponsoring a registered separate account will be permitted to invest in the Unrelated Fund of Funds unless the insurance company has certified to the Unrelated Fund of Funds that the aggregate of all fees and charges associated with each contract that invests in the Unrelated Fund of Funds, including fees and charges at the separate account, Unrelated Fund of Funds, and Underlying Fund levels, will be reasonable in relation to the services rendered, the expenses expected to be incurred, and the risks assumed by the insurance company.

3. Section 17(b) of the Act authorizes the Commission to grant an order permitting a transaction otherwise prohibited by section 17(a) if it finds that (i) the terms of the proposed transaction are fair and reasonable and do not involve overreaching on the part of any person concerned; (ii) the proposed transaction is consistent with the policies of each registered investment company involved; and (iii) the proposed transaction is consistent with the general purposes of the Act. Section 6(c) of the Act permits the Commission to exempt any person or transactions from any provision of the Act if such exemption is necessary or appropriate in the public interest and consistent with the protection of investors and the purposes fairly intended by the policy and provisions of the Act.

4. Applicants submit that the proposed transactions satisfy the standards for relief under sections 17(b) and 6(c) of the Act.[7] Applicants state that the terms of the transactions are reasonable and fair and do not involve overreaching. Applicants note that any consideration paid for the purchase or redemption of shares directly from an Underlying Fund will be based on the net asset value of the Underlying Fund. Applicants state that the proposed transactions will be consistent with the policies of each Underlying Fund and Unrelated Fund of Funds and with the general purposes of the Act.

Other Investments by Related Funds of Funds

1. Section 12(d)(1)(G) of the Act provides that section 12(d)(1) will not apply to securities of an acquired company purchased by an acquiring company if: (i) The acquiring company and acquired company are part of the same group of investment companies; (ii) the acquiring company holds only securities of acquired companies that are part of the same group of investment companies, government securities, and short-term paper; (iii) the aggregate sales loads and distribution-related fees of the acquiring company and the acquired company are not excessive under rules adopted pursuant to section 22(b) or section 22(c) of the Act by a securities association registered under section 15A of the Exchange Act or by the Commission; and (iv) the acquired company has a policy that prohibits it from acquiring securities of registered open-end management investment companies or registered unit investment trusts in reliance on section 12(d)(1)(F) or (G) of the Act.

2. Rule 12d1–2 under the Act permits a registered open-end investment company or a registered unit investment trust that relies on section 12(d)(1)(G) of the Act to acquire, in addition to securities issued by another registered investment company in the same group of investment companies, government securities, and short-term paper: (1) Securities issued by an investment company that is not in the same group of investment companies, when the acquisition is in reliance on section 12(d)(1)(A) or 12(d)(1)(F) of the Act; (2) securities (other than securities issued by an investment company); and (3) securities issued by a money market fund, when the investment is in reliance on rule 12d1–1 under the Act. For the purposes of rule 12d1–2, ''securities'' means any security as defined in section 2(a)(36) of the Act.

3. Applicants state that the proposed arrangement would comply with the provisions of rule 12d1–2 under the Act, but for the fact that the Related Funds of Funds may invest a portion of their assets in Other Investments. Applicants request an order under section 6(c) of the Act for an exemption from rule 12d1–2(a) to allow the Related Funds of Funds to invest in Other Investments. Applicants assert that permitting the Related Funds of Funds to invest in Other Investments as described in the application would not raise any of the concerns that the requirements of section 12(d)(1) were designed to address.

Applicants' Conditions

Applicants agree that any order granting the requested relief will be subject to the following conditions:

Investments in Underlying Funds by Unrelated Funds of Funds

1. The members of an Unrelated Fund of Funds Advisory Group will not control (individually or in the aggregate) an Underlying Fund within the meaning of section 2(a)(9) of the Act. The members of an Unrelated Fund of Funds Subadvisory Group will not control (individually or in the aggregate) an Underlying Fund within the meaning of section 2(a)(9) of the Act. If, as a result of a decrease in the outstanding voting securities of an Underlying Fund, the Unrelated Fund of Funds Advisory Group or the Unrelated Fund of Funds Subadvisory Group, each in the aggregate, becomes a holder of more than 25 percent of the outstanding voting securities of an Underlying Fund, it (except for any member of the Unrelated Fund of Funds Advisory Group or Unrelated Fund of Funds Subadvisory Group that is a separate account funding variable insurance contract) will vote its shares of the Underlying Fund in the same proportion as the vote of all other holders of the Underlying Fund's shares. This condition does not apply to the Unrelated Fund of Funds Subadvisory Group with respect to an Underlying Fund for which the Unrelated Fund of Funds Subadvisers or a person controlling, controlled by, or under common control with the Unrelated Fund of Funds Subadvisers acts as the investment adviser within the meaning of section 2(a)(20)(A) of the Act. A registered separate account funding variable insurance contracts will seek voting instructions from its contract holders and will vote its shares in accordance with the instructions received and will vote those shares for which no instructions were received in the same proportion as the shares for which instructions were received. An unregistered separate account funding variable insurance contracts will either (i) vote its shares of the Underlying Fund in the same proportion as the vote of all other holders of the Underlying Fund's shares; or (ii) seek voting instructions from its contract holders and vote its shares in accordance with the instructions received and vote those shares for which no instructions were received in the same proportion as the shares for which instructions were received.

2. No Unrelated Fund of Funds or Unrelated Fund of Funds Affiliate will cause any existing or potential investment by the Unrelated Fund of Funds in shares of an Underlying Fund to influence the terms of any services or transactions between the Unrelated Fund of Funds or an Unrelated Fund of Funds Affiliate and the Underlying Fund or an Underlying Fund Affiliate.

3. The board of directors or trustees of an Unrelated Fund of Funds, including a majority of the Independent Board Members, will adopt procedures reasonably designed to assure that the Unrelated Fund of Funds Adviser or Unrelated Fund Funds Sponsor and any Unrelated Fund of Funds Subadviser(s) are conducting the investment program of the Unrelated Fund of Funds without taking into account any consideration received by the Unrelated Fund of Funds or an Unrelated Fund of Funds Affiliate from an Underlying Fund or an

[7] Applicants acknowledge that receipt of compensation by (a) an affiliated person of an Unrelated Fund of Funds, or an affiliated person of such person, for the purchase by the Unrelated Fund of Funds of shares of an Underlying Fund or (b) an affiliated person of an Underlying Fund, or an affiliated person of such person, for the sale by the Underlying Fund of its shares to an Unrelated Fund of Funds may be prohibited by section 17(e)(1) of the Act. The Participation Agreement also will include this acknowledgment.

Underlying Fund Affiliate in connection with any services or transactions.

4. Once an investment by an Unrelated Fund of Funds in the securities of an Underlying Fund exceeds the limit in section 12(d)(1)(A)(i) of the Act, the board of directors or trustees of the Underlying Fund (the ''Board''), including a majority of the Independent Board Members, will determine that any consideration paid by the Underlying Fund to an Unrelated Fund of Funds or an Unrelated Fund of Funds Affiliate in connection with any services or transactions: (a) Is fair and reasonable in relation to the nature and quality of the services and benefits received by the Underlying Fund; (b) is within the range of consideration that the Underlying Fund would be required to pay to another unaffiliated entity in connection with the same services or transactions; and (c) does not involve overreaching on the part of any person concerned. This condition does not apply with respect to any services or transactions between an Underlying Fund and its investment adviser(s) or any person controlling, controlled by, or under common control with such investment adviser(s).

5. No Unrelated Fund of Funds or Unrelated Fund of Funds Affiliate (except to the extent it is acting in its capacity as an investment adviser to an Underlying Fund) will cause an Underlying Fund to purchase a security in any Affiliated Underwriting.

6. The Board, including a majority of the Independent Board Members, will adopt procedures reasonably designed to monitor any purchases of securities by the Underlying Fund in an Affiliated Underwriting once an investment by an Unrelated Fund of Funds in the securities of the Underlying Fund exceeds the limit of section 12(d)(1)(A)(i) of the Act, including any purchases made directly from an Underwriting Affiliate. The Board will review these purchases periodically, but no less frequently than annually, to determine whether the purchases were influenced by the investment by the Unrelated Fund of Funds in the Underlying Fund. The Board shall consider, among other things, (i) whether the purchases were consistent with the investment objectives and policies of the Underlying Fund; (ii) how the performance of securities purchased in an Affiliated Underwriting compares to the performance of comparable securities purchased during a comparable period of time in underwritings other than Affiliated Underwritings or to a benchmark such as a comparable market index; and (iii) whether the amount of securities purchased by the Underlying Fund in Affiliated Underwritings and the amount purchased directly from an Underwriting Affiliate have changed significantly from prior years. The Board shall take any appropriate actions based on its review, including, if appropriate, the institution of procedures designed to assure that purchases of securities in Affiliated Underwritings are in the best interests of shareholders.

7. Each Underlying Fund will maintain and preserve permanently in an easily accessible place a written copy of the procedures described in the preceding condition, and any modifications to such procedures, and will maintain and preserve for a period of not less than six years from the end of the fiscal year in which any purchase in an Affiliated Underwriting occurred, the first two years in an easily accessible place, a written record of each purchase of securities in Affiliated Underwritings once an investment by an Unrelated Fund of Funds in the securities of an Underlying Fund exceeds the limit in section 12(d)(1)(A)(i) of the Act, setting forth from whom the securities were acquired, the identity of the underwriting syndicate's members, the terms of the purchase, and the information or materials upon which the Board's determinations were made.

8. Before investing in shares of an Underlying Fund in excess of the limits in section 12(d)(1)(A), the Unrelated Fund of Funds and Underlying Fund will execute a Participation Agreement stating, without limitation, that their boards of directors or trustees and their investment advisers and/or sponsors understand the terms and conditions of the order and agree to fulfill their responsibilities under the order. At the time of its investment in shares of an Underlying Fund in excess of the limit in section 12(d)(1)(A)(i), an Unrelated Fund of Funds will notify the Underlying Fund of the investment. At such time, the Unrelated Fund of Funds will also transmit to the Underlying Fund a list of the names of each Unrelated Fund of Funds Affiliate and Underwriting Affiliate. The Unrelated Fund of Funds will notify the Underlying Fund of any changes to the list of the names as soon as reasonably practicable after a change occurs. The Underlying Fund and the Unrelated Fund of Funds will maintain and preserve a copy of the order, the Participation Agreement, and the list with any updated information for the duration of the investment and for a period of not less than six years thereafter, the first two years in an easily accessible place.

9. Before approving any advisory contract under section 15 of the Act, the board of directors or trustees of each Unrelated Fund of Funds, including a majority of the Independent Board Members, will find that the advisory fees charged under such advisory contract are based on services provided that will be in addition to, rather than duplicative of, the services provided under the advisory contract(s) of any Underlying Fund in which the Unrelated Fund of Funds may invest. These findings and their basis will be recorded fully in the minute books of the appropriate Unrelated Fund of Funds.

10. An Unrelated Fund of Funds Adviser or Unrelated Fund of Funds Sponsor will waive fees otherwise payable to it by the Unrelated Fund of Funds in an amount at least equal to any compensation (including fees received pursuant to any plan adopted by an Underlying Fund under rule 12b-1 under the Act) received from an Underlying Fund by the Unrelated Fund of Funds Adviser or Unrelated Fund of Funds Sponsor, or an affiliated person of the Unrelated Fund of Funds Adviser or Unrelated Fund of Funds Sponsor, other than any advisory fees paid to the Unrelated Fund of Funds Adviser or Unrelated Fund of Funds Sponsor or affiliated persons of the Unrelated Fund of Funds Adviser or Unrelated Fund of Funds Sponsor by the Underlying Fund, in connection with the investment by the Unrelated Fund of Funds in the Underlying Fund. Any Unrelated Fund of Funds Subadvisers will waive fees otherwise payable to the Unrelated Fund of Funds Subadvisers, directly or indirectly, by the Unrelated Fund of Funds in an amount at least equal to any compensation received from any Underlying Fund by the Unrelated Fund of Funds Subadvisers, or an affiliated person of the Unrelated Fund of Funds Subadvisers, other than any advisory fees paid to the Unrelated Fund of Funds Subadvisers or its affiliated person by the Underlying Fund, in connection with the investment by the Unrelated Fund of Funds in the Underlying Fund made at the direction of the Unrelated Fund of Funds Subadvisers. In the event that the Unrelated Fund of Funds Subadvisers waives fees, the benefit of the waiver will be passed through to the Unrelated Fund of Funds.

11. With respect to registered separate accounts that invest in an Unrelated Fund of Funds, no sales load will be charged at the Unrelated Fund of Funds level or at the Underlying Fund level.

Other sales charges and service fees, as defined in Rule 2830 of the NASD Conduct Rules, if any, will only be charged at the Unrelated Fund of Funds level or at the Underlying Fund level, not both. With respect to other investments in an Unrelated Fund of Funds, any sales charges and/or service fees charged with respect to shares of the Unrelated Fund of Funds will not exceed the limits applicable to a fund of funds as set forth in Rule 2830 of the NASD Conduct Rules.

12. No Underlying Fund will acquire securities of any investment company or company relying on section 3(c)(1) or 3(c)(7) of the Act in excess of the limits contained in section 12(d)(1)(A) of the Act, except to the extent that the Underlying Fund: (a) acquires such securities in compliance with section 12(d)(1)(E) of the Act; (b) receives securities of another investment company as a dividend or as a result of a plan of reorganization of a company (other than a plan devised for the purpose of evading section 12(d)(1) of the Act); or (c) acquires (or is deemed to have acquired) securities of another investment company pursuant to exemptive relief from the Commission permitting such Underlying Fund to engage in interfund borrowing and lending transactions; or (d) acquires securities of one or more investment companies for short-term cash management purposes.

Other Investments by Related Funds of Funds

13. The Applicants will comply with all provisions of rule 12d1–2 under the Act, except for paragraph (a)(2), to the extent that it restricts any Related Fund of Funds from investing in Other Investments as described in the application.

For the Commission, by the Division of Investment Management, pursuant to delegated authority.

Kevin M. O'Neill,

Deputy Secretary.

[FR Doc. 2012–17575 Filed 7–18–12; 8:45 am]

BILLING CODE 8011–01–P

SECURITIES AND EXCHANGE COMMISSION

Sunshine Act Meetings

Notice is hereby given, pursuant to the provisions of the Government in the Sunshine Act, Public Law 94–409, that the Securities and Exchange Commission will hold a Closed Meeting on Monday, July 16, 2012 at 11:00 a.m.

Commissioners, Counsel to the Commissioners, the Secretary to the Commission, and recording secretaries will attend the Closed Meeting. Certain staff members who have an interest in the matters also may be present.

The General Counsel of the Commission, or his designee, has certified that, in his opinion, one or more of the exemptions set forth in 5 U.S.C. 552b(c)(3), (4), and (8) and 17 CFR 200.402(a)(3), (4), and (8) permit consideration of the scheduled matters at the Closed Meeting.

Commissioner Aguilar, as duty officer, voted to consider the items listed for the Closed Meeting in a closed session.

The subject matters of the Closed Meeting scheduled for Monday, July 16, 2012 will be examinations of financial institutions and a regulatory matter regarding a financial institution.

At times, changes in Commission priorities require alterations in the scheduling of meeting items.

For further information and to ascertain what, if any, matters have been added, deleted or postponed, please contact: The Office of the Secretary at (202) 551–5400.

Dated: July 16, 2012.

Elizabeth M. Murphy,

Secretary.

[FR Doc. 2012–17609 Filed 7–17–12; 11:15 am]

BILLING CODE 8011–01–P

SECURITIES AND EXCHANGE COMMISSION

[Release No. 34–67433; File No. SR–BX–2012–052]

Self-Regulatory Organizations; NASDAQ OMX BX, Inc.; Notice of Filing of Proposed Rule Change With Respect to the Amendment of the By-Laws of Its Parent Corporation, The NASDAQ OMX Group, Inc. (''NASDAQ OMX'')

July 13, 2012.

Pursuant to Section 19(b)(1) of the Securities Exchange Act of 1934 (''Act'')[1] and Rule 19b–4 thereunder,[2] notice is hereby given that on July 11, 2012, NASDAQ OMX BX, Inc. (''BX'' or the ''Exchange'') filed with the Securities and Exchange Commission (''Commission'') the proposed rule change as described in Items II and III below, which Items have been prepared by the Exchange. The Commission is publishing this notice to solicit comments on the proposed rule change from interested persons.

[1] 15 U.S.C. 78s(b)(1).

[2] 17 CFR 240.19b–4.

I. Self-Regulatory Organization's Statement of the Terms of Substance of the Proposed Rule Change

The Exchange proposes a rule change with respect to the amendment of the by-laws of its parent corporation, The NASDAQ OMX Group, Inc. (''NASDAQ OMX''). The text of the proposed rule change is available at the Exchange's Web site, at the Exchange's principal office, and at the Commission's Public Reference Room.

II. Self-Regulatory Organization's Statement of the Purpose of, and Statutory Basis for, the Proposed Rule Change

In its filing with the Commission, the Exchange included statements concerning the purpose of and basis for the proposed rule change and discussed any comments it received on the proposed rule change. The text of these statements may be examined at the places specified in Item IV below. The Exchange has prepared summaries, set forth in Sections A, B, and C below, of the most significant aspects of such statements.

A. Self-Regulatory Organization's Statement of the Purpose of, and Statutory Basis for, the Proposed Rule Change

1. Purpose

NASDAQ OMX is proposing amendments to provisions of its by-laws pertaining to the composition of the Management Compensation Committee of the NASDAQ OMX Board of Directors. Specifically, NASDAQ OMX is amending the compositional requirements of its Management Compensation Committee in Section 4.13 to replace a requirement that the committee be composed of a majority of Non-Industry Directors[3] with a

[3] An ''Industry Director'' means a Director (excluding any two officers of NASDAQ OMX, selected at the sole discretion of the Board, amongst those officers who may be serving as Directors (the ''Staff Directors'')) who (1) is or has served in the prior three years as an officer, director, or employee of a broker or dealer, excluding an outside director or a director not engaged in the day-to-day management of a broker or dealer; (2) is an officer, director (excluding an outside director), or employee of an entity that owns more than ten percent of the equity of a broker or dealer, and the broker or dealer accounts for more than five percent of the gross revenues received by the consolidated entity; (3) owns more than five percent of the equity securities of any broker or dealer, whose investments in brokers or dealers exceed ten percent of his or her net worth, or whose ownership interest otherwise permits him or her to be engaged in the day-to-day management of a broker or dealer; (4) provides professional services to brokers or dealers, and such services constitute 20 percent or more of the professional revenues received by the Director or 20 percent or more of the gross revenues received by the Director's firm or partnership; (5)

requirement that the number of Non-Industry Directors on the committee equal or exceed the number of Industry Directors. Thus, in the case of a committee composed of four Directors, the current by-law provides that only one Director may be an Industry Director, while the amended by-law would allow up to two Directors to be Industry Directors. The proposed compositional requirement for the committee with regard to the balance between Industry Directors and Non-Industry Directors would be the same as that already provided for in the by-laws with respect to the Executive Committee and the Nominating and Governance Committee, as well as the full Board of Directors.

NASDAQ OMX and the Exchange believe that the change will provide greater flexibility to NASDAQ OMX with regard to populating a committee that includes Directors with relevant expertise and that is not excessively large in relation to the size of the full Board of Directors, while continuing to ensure that Directors associated with Exchange members and other broker-dealers do not exert disproportionate influence of the governance of NASDAQ OMX. As required by NASDAQ Stock Market Rule 5605(d), the committee would continue at all times to be composed solely of Directors who are independent within the meaning of that rule.

2. Statutory Basis

BX believes that the proposed rule change is consistent with the provisions of Section 6 of the Act,[4] in general, and with Sections 6(b)(1) and (b)(5) of the Act,[5] in particular, in that the proposal enables BX to be so organized and to have the capacity to be able to carry out the purposes of the Act and to comply with and enforce compliance by members and persons associated with members with provisions of the Act, the rules and regulations thereunder, and BX rules, and is designed to prevent fraudulent and manipulative acts and practices, to promote just and equitable principles of trade, to foster cooperation and coordination with persons engaged in regulating, clearing, settling, processing information with respect to, and facilitating transactions in securities, to remove impediments to and perfect the mechanism of a free and open market and a national market system, and, in general, to protect investors and the public interest.

BX believes that the change will provide greater flexibility to NASDAQ OMX with regard to populating a committee that includes Directors with relevant expertise and that is not excessively large in relation to the size of the full Board of Directors, while continuing to ensure that Directors associated with Exchange members and other broker-dealers do not exert disproportionate influence of the governance of NASDAQ OMX.

B. Self-Regulatory Organization's Statement on Burden on Competition

The Exchange does not believe that the proposed rule change will impose any burden on competition not necessary or appropriate in furtherance of the purposes of the Act.

C. Self-Regulatory Organization's Statement on Comments on the Proposed Rule Change Received From Members, Participants, or Others

Written comments were neither solicited nor received.

III. Date of Effectiveness of the Proposed Rule Change and Timing for Commission Action

Within 45 days of the date of publication of this notice in the **Federal Register** or within such longer period (i) as the Commission may designate up to 90 days of such date if it finds such longer period to be appropriate and publishes its reasons for so finding or (ii) as to which the Exchange consents, the Commission shall:

A. By order approve or disapprove such proposed rule change; or

B. Institute proceedings to determine whether the proposed rule change should be disapproved.

IV. Solicitation of Comments

Interested persons are invited to submit written data, views, and arguments concerning the foregoing, including whether the proposed rule change is consistent with the Act. Comments may be submitted by any of the following methods:

Electronic Comments

- Use the Commission's Internet comment form (*http://www.sec.gov/rules/sro.shtml*); or
- Send an email to *rule-comments@sec.gov*. Please include File Number SR–BX–2012–052 on the subject line.

Paper Comments

- Send paper comments in triplicate to Elizabeth M. Murphy, Secretary, Securities and Exchange Commission, 100 F Street NE., Washington, DC 20549–1090.

All submissions should refer to File Number SR–BX–2012–052. This file number should be included on the subject line if email is used. To help the Commission process and review your comments more efficiently, please use only one method. The Commission will post all comments on the Commission's Internet Web site (*http://www.sec.gov/rules/sro.shtml*). Copies of the submission, all subsequent amendments, all written statements with respect to the proposed rule change that are filed with the Commission, and all written communications relating to the proposed rule change between the Commission and any person, other than those that may be withheld from the public in accordance with the provisions of 5 U.S.C. 552, will be available for Web site viewing and printing in the Commission's Public Reference Room, 100 F Street NE., Washington, DC 20549, on official business days between the hours of 10:00 a.m. and 3:00 p.m. Copies of the filing also will be available for inspection and copying at the principal office of the Exchange. All comments received will be posted without change; the Commission does not edit personal identifying information from submissions. You should submit only information that you wish to make available publicly. All submissions should refer to File Number SR–BX–2012–052 and should be submitted on or before August 9, 2012.

For the Commission, by the Division of Trading and Markets, pursuant to delegated authority.[6]

Kevin M. O'Neill,

Deputy Secretary.

[FR Doc. 2012–17547 Filed 7–18–12; 8:45 am]

BILLING CODE 8011–01–P

provides professional services to a director, officer, or employee of a broker, dealer, or corporation that owns 50 percent or more of the voting stock of a broker or dealer, and such services relate to the director's, officer's, or employee's professional capacity and constitute 20 percent or more of the professional revenues received by the Director or 20 percent or more of the gross revenues received by the Director's firm or partnership; or (6) has a consulting or employment relationship with or provides professional services to NASDAQ OMX or any affiliate thereof or to the Financial Industry Regulatory Authority (''FINRA'') or has had any such relationship or provided any such services at any time within the prior three years.

A ''Non-Industry Director'' means a Director (excluding the Staff Directors) who is (1) a Public Director; (2) an officer, director, or employee of an issuer of securities listed on a national securities exchange operated by any subsidiary of NASDAQ OMX that is a self-regulatory organization; or (3) any other individual who would not be an Industry Director.

A ''Public Director'' means a Director who has no material business relationship with a broker or dealer, NASDAQ OMX or its affiliates, or FINRA.

[4] 15 U.S.C. 78f.

[5] 15 U.S.C. 78f(b)(1), (5).

[6] 17 CFR 200.30–3(a)(12).

SECURITIES AND EXCHANGE COMMISSION

[Release No. 34–67434; File No. SR–Phlx-2012–95]

Self-Regulatory Organizations; NASDAQ OMX PHLX LLC; Notice of Filing of Proposed Rule Change With Respect to the Amendment of the By-Laws of its Parent Corporation, The NASDAQ OMX Group, Inc. (''NASDAQ OMX'') July 13, 2012.

Pursuant to Section 19(b)(1) of the Securities Exchange Act of 1934 (''Act'')[1] and Rule 19b–4 thereunder,[2] notice is hereby given that on July 11, 2012, NASDAQ OMX PHLX LLC (''Phlx'' or the ''Exchange'') filed with the Securities and Exchange Commission (''Commission'') the proposed rule change as described in Items II and III below, which Items have been prepared by the Exchange. The Commission is publishing this notice to solicit comments on the proposed rule change from interested persons.

I. Self-Regulatory Organization's Statement of the Terms of Substance of the Proposed Rule Change

The Exchange proposes a rule change with respect to the amendment of the by-laws of its parent corporation, The NASDAQ OMX Group, Inc. (''NASDAQ OMX''). The text of the proposed rule change is available at the Exchange's Web site, at the Exchange's principal office, and at the Commission's Public Reference Room.

II. Self-Regulatory Organization's Statement of the Purpose of, and Statutory Basis for, the Proposed Rule Change

In its filing with the Commission, the Exchange included statements concerning the purpose of and basis for the proposed rule change and discussed any comments it received on the proposed rule change. The text of these statements may be examined at the places specified in Item IV below. The Exchange has prepared summaries, set forth in Sections A, B, and C below, of the most significant aspects of such statements.

A. Self-Regulatory Organization's Statement of the Purpose of, and Statutory Basis for, the Proposed Rule Change

1. Purpose

NASDAQ OMX is proposing amendments to provisions of its by-laws pertaining to the composition of the Management Compensation Committee of the NASDAQ OMX Board of Directors. Specifically, NASDAQ OMX is amending the compositional requirements of its Management Compensation Committee in Section 4.13 to replace a requirement that the committee be composed of a majority of Non-Industry Directors[3] with a requirement that the number of Non-Industry Directors on the committee equal or exceed the number of Industry Directors. Thus, in the case of a committee composed of four Directors, the current by-law provides that only one Director may be an Industry Director, while the amended by-law would allow up to two Directors to be Industry Directors. The proposed compositional requirement for the committee with regard to the balance between Industry Directors and Non-Industry Directors would be the same as that already provided for in the by-laws with respect to the Executive Committee and the Nominating and Governance Committee, as well as the full Board of Directors.

NASDAQ OMX and the Exchange believe that the change will provide greater flexibility to NASDAQ OMX with regard to populating a committee that includes Directors with relevant expertise and that is not excessively large in relation to the size of the full Board of Directors, while continuing to ensure that Directors associated with Exchange members and other broker-dealers do not exert disproportionate influence of the governance of NASDAQ OMX. As required by NASDAQ Stock Market Rule 5605(d), the committee would continue at all times to be composed solely of Directors who are independent within the meaning of that rule.

2. Statutory Basis

Phlx believes that the proposed rule change is consistent with the provisions of Section 6 of the Act,[4] in general, and with Sections 6(b)(1) and (b)(5) of the Act,[5] in particular, in that the proposal enables Phlx to be so organized and to have the capacity to be able to carry out the purposes of the Act and to comply with and enforce compliance by members and persons associated with members with provisions of the Act, the rules and regulations thereunder, and Phlx rules, and is designed to prevent fraudulent and manipulative acts and practices, to promote just and equitable principles of trade, to foster cooperation and coordination with persons engaged in regulating, clearing, settling, processing information with respect to, and facilitating transactions in securities, to remove impediments to and perfect the mechanism of a free and open market and a national market system, and, in general, to protect investors and the public interest.

Phlx believes that the change will provide greater flexibility to NASDAQ OMX with regard to populating a committee that includes Directors with relevant expertise and that is not excessively large in relation to the size of the full Board of Directors, while continuing to ensure that Directors associated with Exchange members and other broker-dealers do not exert disproportionate influence of the governance of NASDAQ OMX.

B. Self-Regulatory Organization's Statement on Burden on Competition

The Exchange does not believe that the proposed rule change will impose any burden on competition not

[1] 15 U.S.C. 78s(b)(1).

[2] 17 CFR 240.19b–4.

[3] An ''Industry Director'' means a Director (excluding any two officers of NASDAQ OMX, selected at the sole discretion of the Board, amongst those officers who may be serving as Directors (the ''Staff Directors'')) who (1) Is or has served in the prior three years as an officer, director, or employee of a broker or dealer, excluding an outside director or a director not engaged in the day-to-day management of a broker or dealer; (2) is an officer, director (excluding an outside director), or employee of an entity that owns more than ten percent of the equity of a broker or dealer, and the broker or dealer accounts for more than five percent of the gross revenues received by the consolidated entity; (3) owns more than five percent of the equity securities of any broker or dealer, whose investments in brokers or dealers exceed ten percent of his or her net worth, or whose ownership interest otherwise permits him or her to be engaged in the day-to-day management of a broker or dealer; (4) provides professional services to brokers or dealers, and such services constitute 20 percent or more of the professional revenues received by the Director or 20 percent or more of the gross revenues received by the Director's firm or partnership; (5) provides professional services to a director, officer, or employee of a broker, dealer, or corporation that owns 50 percent or more of the voting stock of a broker or dealer, and such services relate to the director's, officer's, or employee's professional capacity and constitute 20 percent or more of the professional revenues received by the Director or 20 percent or more of the gross revenues received by the Director's firm or partnership; or (6) has a consulting or employment relationship with or provides professional services to NASDAQ OMX or any affiliate thereof or to the Financial Industry Regulatory Authority (''FINRA'') or has had any such relationship or provided any such services at any time within the prior three years.

A ''Non-Industry Director'' means a Director (excluding the Staff Directors) who is (1) A Public Director; (2) an officer, director, or employee of an issuer of securities listed on a national securities exchange operated by any subsidiary of NASDAQ OMX that is a self-regulatory organization; or (3) any other individual who would not be an Industry Director.

A ''Public Director'' means a Director who has no material business relationship with a broker or dealer, NASDAQ OMX or its affiliates, or FINRA.

[4] 15 U.S.C. 78f.

[5] 15 U.S.C. 78f(b)(1), (5).

necessary or appropriate in furtherance of the purposes of the Act.

C. Self-Regulatory Organization's Statement on Comments on the Proposed Rule Change Received From Members, Participants, or Others

Written comments were neither solicited nor received.

III. Date of Effectiveness of the Proposed Rule Change and Timing for Commission Action

Within 45 days of the date of publication of this notice in the **Federal Register** or within such longer period (i) as the Commission may designate up to 90 days of such date if it finds such longer period to be appropriate and publishes its reasons for so finding or (ii) as to which the Exchange consents, the Commission shall:

A. By order approve or disapprove such proposed rule change; or

B. Institute proceedings to determine whether the proposed rule change should be disapproved.

IV. Solicitation of Comments

Interested persons are invited to submit written data, views, and arguments concerning the foregoing, including whether the proposed rule change is consistent with the Act. Comments may be submitted by any of the following methods:

Electronic Comments

- Use the Commission's Internet comment form (*http://www.sec.gov/rules/sro.shtml*); or
- Send an email to *rule-comments@sec.gov*. Please include File Number SR–Phlx–2012–95 on the subject line.

Paper Comments

- Send paper comments in triplicate to Elizabeth M. Murphy, Secretary, Securities and Exchange Commission, 100 F Street NE., Washington, DC 20549–1090.

All submissions should refer to File Number SR–Phlx-2012–95. This file number should be included on the subject line if email is used. To help the Commission process and review your comments more efficiently, please use only one method. The Commission will post all comments on the Commission's Internet Web site (*http://www.sec.gov/rules/sro.shtml*). Copies of the submission, all subsequent amendments, all written statements with respect to the proposed rule change that are filed with the Commission, and all written communications relating to the proposed rule change between the Commission and any person, other than those that may be withheld from the public in accordance with the provisions of 5 U.S.C. 552, will be available for Web site viewing and printing in the Commission's Public Reference Room, 100 F Street NE., Washington, DC 20549, on official business days between the hours of 10:00 a.m. and 3:00 p.m. Copies of the filing also will be available for inspection and copying at the principal office of the Exchange. All comments received will be posted without change; the Commission does not edit personal identifying information from submissions. You should submit only information that you wish to make available publicly. All submissions should refer to File Number SR–Phlx-2012–95 and should be submitted on or before August 9, 2012.

For the Commission, by the Division of Trading and Markets, pursuant to delegated authority.[6]

Kevin M. O'Neill,

Deputy Secretary.

[FR Doc. 2012–17548 Filed 7–18–12; 8:45 am]

BILLING CODE 8011–01–P

[6] 17 CFR 200.30–3(a)(12).

SECURITIES AND EXCHANGE COMMISSION

[Release No. 34–67437; File Nos. SR–NYSE–2011–56; SR–NYSEAmex–2011–86]

Self-Regulatory Organizations; New York Stock Exchange LLC; NYSE Amex LLC; Order Disapproving Proposed Rule Changes To Codify Certain Traditional Trading Floor Functions That May Be Performed by Designated Market Makers and To Permit Designated Market Makers and Floor Brokers Access to Disaggregated Order Information

July 13, 2012.

On October 31, 2011, the New York Stock Exchange LLC (''NYSE'') and NYSE Amex LLC (''NYSE Amex'') (collectively, the ''SROs'') each filed with the Securities and Exchange Commission (''Commission''), pursuant to Section 19(b)(1) of the Securities Exchange Act of 1934 (''Act'')[1] and Rule 19b–4 thereunder,[2] proposed rule changes (''SRO Proposals'') to amend certain of their respective rules relating to Designated Market Makers (''DMMs'')[3] and Floor brokers. The SRO Proposals were published for comment in the **Federal Register** on November 17, 2011.[4] The Commission received no comment letters on the proposals. On December 22, 2011, the Commission extended the time period in which to either approve the SRO Proposals, disapprove the SRO Proposals, or to institute proceedings to determine whether to disapprove the SRO Proposals, to February 15, 2012.[5]

On February 15, 2012, the Commission instituted proceedings to determine whether to disapprove the proposed rule changes.[6] The Commission thereafter received five comment letters on the proposals.[7] NYSE Euronext, on behalf of the SROs, submitted a response letter on March 28, 2012.[8] On May 14, 2012, the Commission issued a notice of designation of longer period for Commission action on proceedings to determine whether to disapprove the proposed rule changes.[9] This order disapproves the proposed rule changes.

I. Description of the Proposals

The SRO Proposals seek to amend the SROs' rules in several ways. First, the

[1] 15 U.S.C. 78s(b)(1).

[2] 17 CFR 240.19b–4.

[3] *See* NYSE Rule 98(b)(2). ''DMM unit'' means any member organization, aggregation unit within a member organization, or division or department within an integrated proprietary aggregation unit of a member organization that (i) Has been approved by NYSE Regulation pursuant to section (c) of NYSE Rule 98, (ii) is eligible for allocations under NYSE Rule 103B as a DMM unit in a security listed on the Exchange, and (iii) has met all registration and qualification requirements for DMM units assigned to such unit. The term ''DMM'' means any individual qualified to act as a DMM on the floor of the Exchange under NYSE Rule 103. *See also* NYSE Amex Equities Rule 2(i). Rule 2(i) defines the term ''DMM'' to mean an individual member, officer, partner, employee or associated person of a DMM unit who is approved by the Exchange to act in the capacity of a DMM. NYSE Amex Equities Rule 2(j) defines the term ''DMM unit'' as a member organization or unit within a member organization that has been approved to act as a DMM unit under NYSE Amex Equities Rule 98.

[4] *See* Securities Exchange Act Release Nos. 65735 (November 10, 2011), 76 FR 71405 (SR–NYSEAmex-2011–86) (''NYSE Amex Notice'') and 65736 (November 10, 2011), 76 FR 71399 (SR–NYSE–2011–56) (''NYSE Notice'').

[5] *See* Securities Exchange Act Release No. 66036, 76 FR 82011 (December 29, 2011).

[6] *See* Securities Exchange Act Release No. 66397, 77 FR 10586 (February 22, 2012) (''Order Instituting Proceedings'').

[7] *See* Letters to Elizabeth M. Murphy, Secretary, Commission, from Kenneth Polcari, dated March 12, 2012 (''Polcari Letter''); Patrick Armstrong and Daniel Tandy, Co-Presidents, Alliance of Floor Brokers (''AFB''), dated March 13, 2012 (''AFB Letter''); Jonathan Corpina, President, and Jennifer Lee, Vice President, Organization of Independent Floor Brokers (''OIFB''), dated March 13, 2012 (''OIFB Letter''); James J. Angel, Ph.D., CFA, dated March 15, 2012 (''Angel Letter''); and John Petschauer, CEO, EZX, Inc., dated March 14, 2012 (''EZX Letter'').

[8] *See* Letter to Elizabeth M. Murphy, Secretary, Commission, from Janet McGinness, Executive Vice President and Corporate Secretary, NYSE Euronext, dated March 28, 2012 (''SRO Response Letter'').

[9] *See* Securities Exchange Act Release No. 66981, 77 FR 29730 (May 18, 2012).

SROs propose to codify certain trading floor functions that may be performed by DMMs. Second, the SROs propose to allow DMMs to access Exchange systems that would provide DMMs with additional order information about the securities in which they are registered. Third, the SROs propose to make certain conforming amendments to their rules to reflect the additional order information that would be available to DMMs through Exchange systems, and to specify what information about Floor broker agency interest file (''e-Quotes'') is available to the DMM. Finally, the SROs propose to modify the terms under which DMMs would be permitted to provide market information to Floor brokers and others.

A. Trading Floor Functions

The SROs propose to codify certain trading floor functions formerly performed by specialists that are now performed by DMMs, and were described in each SRO's respective Floor Official Manual.[10]

The proposed rules would specify four categories of trading floor functions that DMMs could perform: (1) Maintaining order among Floor brokers manually trading at the DMM's assigned panel;[11] (2) bringing Floor brokers together to facilitate trading;[12] (3) assisting Floor brokers with respect to their orders by providing information regarding the status of a Floor broker's orders, helping to resolve errors or questioned trades, adjusting errors, and cancelling or inputting Floor broker agency interest on behalf of a Floor broker;[13] and (4) researching the status of orders or questioned trades.[14]

B. DMM Access to Additional Order Information

Each SRO proposes to make Exchange systems available to a DMM at the post that display the following types of information about securities in which the DMM is registered: (A) Aggregated information about buying and selling interest;[15] (B) disaggregated information about the price and size of any individual order or e-Quotes and the entering and clearing firm information for such orders, except that Exchange systems would not make available to DMMs information about any order or e-Quote, or portion thereof, that a market participant has elected not to display to a DMM; and (C) post-trade information.[16] The proposals would make available to DMMs disaggregated information about the following interest in securities in which the DMM is registered: (a) the price and size of all displayable interest submitted by off-Floor participants (off-Floor participants may submit non-displayable interest that is hidden from the DMM);[17] and (b) all e-Quotes, including reserve e-Quotes, that the Floor broker has not elected to exclude from availability to the DMM.[18]

C. Conforming Amendments and Floor Broker e-Quote Information

The SROs also propose to make conforming amendments to their rules to reflect the additional order information that would be available to DMMs through Exchange systems, and to specify what information about e-Quotes is available to the DMM. Specifically, the SROs propose to revise NYSE Rule 70 and NYSE Amex Rule 70 governing e-Quotes to reflect that disaggregated order information would be available to the DMM except as elected otherwise. The SROs would allow a Floor broker to enter e-Quotes with reserve interest (''Reserve e-Quote'') with or without a displayable portion.

A Reserve e-Quote with a displayable portion would participate in manual and automatic executions. Order information at each price point, including the reserve portion, would be included in the aggregate interest available to the DMM. Order information at each price point would be available to the DMM on a disaggregated basis as well. If the Floor broker chooses to exclude the Reserve e-Quote with a displayable portion from the DMM, then the DMM would have access to the entire portion on an aggregated basis but would not have access to any of that interest on a disaggregated basis.

A Reserve e-Quote with an undisplayable portion would also participate in manual and automatic executions. Like the Reserve e-Quote with a displayable portion, order information at each price point would be included in the aggregate interest available to the DMM. Again, like the Reserve e-Quote with a displayable portion, order information at each price point would be available to the DMM on a disaggregated basis as well. If the Floor broker chooses to exclude the Reserve e-Quote with an undisplayable portion from the DMM, however, then the DMM would not have access to such interest on either an aggregated basis or a disaggregated basis. Such interest would not participate in manual executions.

In addition, the SROs propose to delete rules which currently prohibit DMMs from using the Display Book system to access information about e-Quotes excluded from the aggregated agency interest and Minimum Display Reserve Order information, other than for the purpose of effecting transactions that are reasonably imminent where such Floor broker agency and Minimum Display Reserve Order interest information is necessary to effect such transaction.[19]

D. Ability of DMMs to Provide Market Information on the Trading Floor

The SROs also propose to modify the manner under which DMMs would be permitted to provide market information to Floor brokers and visitors on the trading floor. Specifically, the proposed

[10] *See, e.g.,* NYSE *2004 Floor Official Manual, Market Surveillance June 2004 Edition,* Chapter Two, Section I.

[11] *See id.* at Section I.A. at 7 (''specialist helps ensure that such markets are fair, orderly, operationally efficient and competitive with all other markets in those securities'').

[12] *See id.* at Section I.B.3. at 10–11 (''[i]n opening and reopening trading in a listed security, a specialist should * * * [s]erve as the market coordinator for the securities in which the specialist is registered by exercising leadership and managing trading crowd activity and promptly identifying unusual market conditions that may affect orderly trading in those securities, seeking the advice and assistance of Floor Officials when appropriate'' and ''[a]ct as a catalyst in the markets for the securities in which the specialist is registered, making all reasonable efforts to bring buyers and sellers together to facilitate the public pricing of orders, without acting as principal unless reasonably necessary'').

[13] *See id.* at Section I.B.4. at 11 (''In view of the specialist's central position in the Exchange's continuous two-way agency auction market, a specialist should proceed as follows * * * [e]qually and impartially provide accurate and timely market information to all inquiring members in a professional and courteous manner.'').

[14] *See id.* at Section I.B.5. at 12 (A specialist should ''[p]romptly provide information when necessary to research the status of an order or a questioned trade and cooperate with other members in resolving and adjusting errors.'').

[15] Exchange systems currently make available to DMMs aggregate information about the following interest in securities in which the DMM is registered: (a) All displayable interest submitted by off-floor participants; (b) all Minimum Display Reserve orders, including the reserve portion; (c) all displayable floor broker agency interest files (''e-Quotes''); (d) all Minimum Display Reserve e-Quotes, including the reserve portion; and (e) the reserve quantity of Non-Display Reserve e-Quotes, unless the floor broker elects to exclude that reserve quantity from availability to the DMM.

[16] For the latter two categories, the DMM also would have access to entering and clearing firm information for each order and, as applicable, the badge number of the floor broker representing the order. According to the SROs, the systems would not contain any information about the ultimate customer (*i.e.,* the name of the member or member organization's customer) in a transaction.

[17] *See* NYSE and NYSE Amex Rule 13, defining non-displayed order types.

[18] The SROs previously permitted DMMs to have access to Exchange systems that contained the disaggregated order information described above. The SROs stopped making such information available to DMMs on January 19, 2011. *See* NYSE and NYSE Amex Information Memo 11–03.

[19] *See* proposed deletions to NYSE Rule 104(a)(6) and NYSE Amex Rule 104(a)(b).

rules would permit a DMM to provide the market information to which he or she has access to a: (1) Floor broker in response to an inquiry in the normal course of business; or (2) visitor to the trading floor for the purpose of demonstrating methods of trading. As such, Floor brokers would be able to access disaggregated order information that market participants have not otherwise elected to be hidden from the DMM. A Floor broker would not be able to submit such an inquiry for market information by electronic means, and the DMM's response containing market information could not be delivered through electronic means.

Because the proposed rule expands on and incorporates the current SRO rules regarding disclosure of order information by DMMs, the SROs are proposing to delete these rules.[20] The current rules provide that a DMM may disclose market information for three purposes. First, a DMM may disclose market information for the purpose of demonstrating the methods of trading to visitors to the trading floor. This aspect of the current rule is replicated in the proposed rules. Second, a DMM may disclose market information to other market centers in order to facilitate the operation of the Intermarket Trading System (''ITS''). According to the SROs, this text is obsolete as the ITS Plan has been eliminated and therefore the SROs are proposing to delete it. Third, a DMM may, while acting in a market making capacity, provide information about buying or selling interest in the market, including (a) Aggregated buying or selling interest contained in Floor broker agency interest files other than interest the broker has chosen to exclude from the aggregated buying and selling interest, (b) aggregated interest of Minimum Display Reserve Orders and (c) the interest included in DMM interest files, excluding Capital Commitment Schedule (''CCS'') interest as described in Rule 1000(c), in response to an inquiry from a member conducting a market probe in the normal course of business. The proposed rules would permit DMMs to provide Floor brokers not only with the same aggregated order information that DMMs currently are permitted to provide under current rules, but also with the disaggregated and post-trade order information described above.[21]

The proposed rules would permit a DMM to provide market information to a Floor broker in response to a specific request by the Floor broker to the DMM at the post, rather than specifying that the information must be provided ''in response to an inquiry from a member conducting a market probe in the normal course of business,'' as currently provided in the SRO rules. Under the proposed rule change, Floor brokers would not have access to Exchange systems that provide disaggregated order information, and Floor brokers would only be able to access such market information through a direct manual interaction with a DMM at the post.

II. Disapproval Proceedings, Summary of Comment Letters and the SROs' Response

In the Order Instituting Proceedings, the Commission expressed concern about the consistency of the proposals with Section 6(b)(5) of the Act, including whether they would permit unfair discrimination, promote just and equitable principles of trade, and protect investors and the public interest.[22] Among other things, the Commission noted that, while the proposals may improve the ability of DMMs and Floor brokers to trade on the Exchanges, the proposals also would provide them access to potentially valuable information about Exchange orders that is not available to other members or market participants, including the identity of the entering and clearing firm.[23] The Commission stated that, while exchanges may legitimately confer special benefits on market participants willing to accept substantial responsibilities to contribute to market quality, such benefits must not be disproportionate to the services provided.[24] The Commission noted that the Exchanges were not proposing to require any additional obligations from DMMs and Floor brokers in exchange for the additional order information, and had not clearly explained how the proposals would materially improve the quality of the SROs' markets.[25] As a result, the Commission was concerned that the proposals unfairly discriminated in favor of DMMs and Floor brokers, might not have been designed to protect the broad group of investors that trade on the SROs, and otherwise might be inequitable.[26]

The Commission received five comment letters in support of the proposed rule changes,[27] along with a response from the SROs.[28] In general, the commenters believed that the floors of the Exchanges continued to provide a valuable service to the markets, particularly with respect to the facilitation of block trades, and they broadly indicated that the proposed provision of disaggregated order information to Floor members would further this important function.[29] One commenter also stated that the access to this information would enable DMMs to assist Floor brokers in the event of a technical failure.[30] Some noted that this type of information had historically been made available to Floor members.[31]

Commenters did not believe the proposals were unfairly discriminatory because, in their view, DMMs would be obligated to provide disaggregated order information to Floor brokers in a non-discriminatory fashion, and Floor brokers would be obligated to do the same for their customers.[32] Commenters also expressed the view that the disaggregated order information would be of limited utility because it could only be accessed manually,[33] and they noted that Floor brokers were restricted from trading proprietarily and thus could not directly benefit from this information.[34]

Commenters also emphasized that market participants that do not wish to allow their disaggregated order information to be provided to DMMs and Floor brokers can use undisplayed orders or place orders on a competing exchange.[35] One commenter urged the Commission to allow exchange experimentation and believed that, if the proposals resulted in information leakage or degraded market quality, then order flow would rapidly shift to other trading venues.[36]

[20] The SROs are also proposing conforming amendments to correct cross-references to the former rule.

[21] Because DMMs on the trading floor do not have access to CCS interest information, the proposed rule does not specify that DMMs would not be disseminating such information.

[22] 15 U.S.C. 78f(b)(5).

[23] *See* Order Instituting Proceedings, *supra* note 6, at 10589.

[24] *See* Order Instituting Proceedings, *supra* note 6, at 10588.

[25] *Id.* at 10589.

[26] *See id.*

[27] *See supra* note 7.

[28] *See supra* note 8.

[29] AFB Letter, *supra* note 7, at 3; Angel Letter, *supra* note 7, at 2; EZX Letter, *supra* note 7; OIFB Letter, *supra* note 7, at 1; and Polcari Letter, *supra* note 7, at 2.

[30] *See* OIFB Letter, *supra* note 7, at 1.

[31] *See* AFB Letter, *supra* note 7, at 2; Angel Letter, *supra* note 7, at 2; and OIFB Letter, *supra* note 7, at 1.

[32] *See* AFB Letter, *supra* note 7, at 3; Angel Letter, *supra* note 7, at 3; OIFB Letter, *supra* note 7, at 1–2; and Polcari Letter, *supra* note 7, at 2.

[33] *See* OIFB Letter, *supra* note 7, at 2.

[34] *See* AFB Letter, *supra* note 7, at 4; OIFB Letter, *supra* note 7, at 2; Polcari Letter; *supra* note 7, at 3.

[35] *See* AFB Letter, *supra* note 7, at 2; Angel Letter, *supra* note 7, at 3; and OIFB Letter, *supra* note 7, at 1.

[36] *See* Angel Letter, *supra* note 7, at 3–4.

In their response, the SROs, among other things, emphasized that ''[t]he purpose of the Proposals is to help DMMs facilitate large orders on the Trading Floor if an investor wishes to utilize the resources of a Floor broker,'' [37] and argued that the proposals would ''potentially make the Floor more hospitable to large orders, reduce transaction costs and produce savings for long-term investors.'' [38] In proposing to provide disaggregated order information to Floor members, the SROs ''seek to provide improved conditions for buyers and sellers to interact at potentially more favorable prices, or in larger-sized executions, on the Floors of the Exchanges.'' [39] The SROs believe that ''making this information available to Floor brokers [would make] it easier for * * * size trades to be arranged, and for leakage and market impact to be avoided.'' [40]

At the same time, the SROs take the position that ''any informational advantage conveyed is extremely slight.'' [41] They note that DMMs and Floor brokers already have access to aggregated order information, and that the proposals would allow them ''to see the disaggregated form of such aggregated interest, which means simply that the components of the aggregated interest and the entering and clearing firms that are associated with those components (but not the ultimate customers) will be visible.'' [42] The SROs also point out that the disaggregated information ''is only available to a DMM while on the trading Floor at the trading post,'' and take the position that the ''DMM must query the specific information about a particular security, a process which limits the number of securities for which information can be obtained at any given time,'' so that ''[a]ny actual informational advantage resulting from viewing disaggregated information would be eliminated by the staleness of the information.'' [43] In the view of the SROs, because the proposals do ''not convey any truly exclusive or significant benefit to DMMs and Floor brokers, new, additional obligations are not necessary.''[44]

In addition, the SROs believe that existing restrictions on trading by DMMs and Floor brokers address concerns associated with any potential informational advantage.[45] According to the SROs, the disaggregated order information would not be available to a DMM's trading algorithm, and Exchange rules effectively erect an information barrier between DMM personnel on the Floor and the DMM's off-Floor trading operations.[46] With respect to Floor brokers, the SROs state that, because ''they are prohibited from trading on a principal basis, any potential benefit accrues to the investor, not the Floor broker.'' [47] The SROs also note that, prior to the adoption of their ''Hybrid Market,'' specialists were permitted to provide disaggregated order information to Floor brokers.[48] Finally, the SROs take the position that ''access to the disaggregated order information is entirely consensual,'' [49] because a market participant that does not want its interest shown can ''(1) choose to have the order not display on a disaggregated basis or (2) place the order with a NYSE competitor.'' [50]

III. Discussion

Under Section 19(b)(2)(C) of the Act, the Commission shall approve a proposed rule change of a self-regulatory organization if the Commission finds that such proposed rule change is consistent with the requirements of the Act, and the rules and regulations thereunder that are applicable to such organization.[51] The Commission shall disapprove a proposed rule change if it does not make such a finding.[52] The Commission's Rules of Practice, under Rule 700(b)(3), state that the ''burden to demonstrate that a proposed rule change is consistent with the Exchange Act and the rules and regulations issued thereunder * * * is on the self-regulatory organization that proposed the rule change'' and that a ''mere assertion that the proposed rule change is consistent with those requirements * * * is not sufficient.'' [53]

After careful consideration, the Commission does not find that the proposed rule changes are consistent with the requirements of the Act and the rules and regulations thereunder applicable to a national securities exchange. In particular, the Commission does not find that the proposals are consistent with Section 6(b)(5) of the Act,[54] which, among other things, requires that the rules of a national securities exchange be designed to promote just and equitable principles of trade, to protect investors and the public interest, and not to permit unfair discrimination between customers, issuers, brokers, or dealers.

Specifically, the SROs propose to provide their Floor members—DMMs and Floor brokers—special access to information about individual orders on the Exchanges. The proposals would permit DMMs to access information about the price and size of individual orders on the Exchange books, as well as Floor broker e-Quotes, along with the identity of the broker-dealer that entered the order and the clearing firm. DMMs also would be provided post-trade information with respect to Exchange orders that, similarly, includes the identity of the broker-dealer that entered the order and the clearing firm.

In the Order Instituting Proceedings, the Commission expressed concern that, while the proposals may improve the ability of DMMs and Floor brokers to trade on the SROs, the proposals also would provide DMMs and Floor brokers access to potentially valuable information about Exchange orders generated both on and off the Floor that is not made available to other Exchange members or market participants, unless it is acquired through a Floor broker. The Commission also noted that the SROs were not proposing to require any additional obligations from DMMs and Floor brokers in exchange for the additional order information, and had not clearly explained how the proposals would materially improve the quality of the SROs' markets. In response, commenters and the SROs made general arguments that the proposals would facilitate the ability of DMMs and Floor brokers to perform important trading floor functions, such as bringing together market participants seeking to trade large orders or assisting Floor members in the event they experience a technical failure. Neither the SROs nor the commenters explained, however, how the particular information proposed to be provided—disaggregated information about public orders on the Exchange books as well as Floor broker

[37] SRO Response Letter, *supra* note 7, at 15–16.

[38] *Id.* at 3.

[39] *Id.* at 4–5.

[40] *Id.* at 11.

[41] *Id.* at 11.

[42] *Id.* at 10–11.

[43] *Id.* at 12.

[44] *Id.* at 13.

[45] *Id.* at 3.

[46] *Id.* at 11–12.

[47] *Id.* at 12.

[48] *Id.* at 5 and 16.

[49] *Id.* at 11.

[50] *Id.* at 16.

[51] *See* 15 U.S.C. 78s(b)(2)(C)(i).

[52] *See* 15 U.S.C. 78s(b)(2)(C)(ii); *see also* 17 CFR 201.700 (b)(3) and note 56 *infra,* and accompanying text.

[53] *See* 17 CFR 201.700. The description of a proposed rule change, its purpose and operation, its effect, and a legal analysis of its consistency with applicable requirements must all be sufficiently detailed and specific to support an affirmative Commission finding. *See id.* Any failure of a self-regulatory organization to provide the information elicited by Form 19b–4 may result in the Commission not having a sufficient basis to make an affirmative finding that a proposed rule change is consistent with the Act and the rules and regulations issued thereunder that are applicable to the self-regulatory organization. *Id.*

[54] 15 U.S.C. 78f(b)(5).

e-Quotes—would further those legitimate Floor functions. Although not articulated by the SROs or commenters, the Commission could envision an argument that allowing DMMs to see information about individual Floor broker e-Quotes, including the identity of the responsible Floor broker, and convey that information to other Floor brokers, could facilitate the bringing together of buyers and sellers of large orders on the Floor more efficiently than through verbal communications. However, neither the SROs nor the commenters have offered any specific explanation, nor has the Commission been able to otherwise discern, how the provision of disaggregated pre-trade and post-trade information about public orders on the Exchange books, including the identity of the entering and clearing firms, would promote a legitimate Floor function. Nor have the SROs or the commenters provided any specific justification for allowing Floor brokers to pass on to their customers the identity of the responsible Floor broker for e-Quotes, or any disaggregated order information (pre-trade or post trade) with respect to orders on the Exchange books that originate off the Exchange floors.

Although the SROs and commenters have taken the position that the disaggregated order information proposed to be provided would afford only a slight benefit to Floor members, given that it must be accessed manually, they have not clearly explained why this is the case, particularly with respect to less liquid securities where order information is less likely to become rapidly stale. In addition, neither the SROs nor the commenters have articulated a rationale for providing disaggregated order information—particularly that relating to public orders on the Exchange books—exclusively to DMMs and Floor brokers and, by extension, exclusively to Floor broker customers, and not to all Exchange members and customers. While the SROs and commenters believe that the proposals are not unfairly discriminatory because DMMs must provide the information to Floor brokers in a non-discriminatory fashion, and Floor brokers must do the same with respect to their customers, they do not explain why it is not unfairly discriminatory to offer this information only through Floor brokers and not through other Exchange members.

The SROs and commenters point out that customers can prevent their disaggregated order information from being accessed by DMMs and Floor brokers by submitting a non-displayable order or, with respect to Floor broker e-Quotes, instructing that the information be withheld from the DMM. They also note that Floor brokers are not permitted to trade on a proprietary basis, and that DMMs are subject to restrictions that limit their ability to benefit directly from their receipt of disaggregated order information by trading proprietarily. Although these are factors that may mitigate potential harm that may result from the proposals, they do not in themselves offer an affirmative justification as to why the specific proposals under consideration would not permit unfair discrimination, or would promote just and equitable principles of trade and protect investors and the public interest, or would otherwise be consistent with the Act. Similarly, while the SROs and commenters note that specialists historically were permitted to provide disaggregated order information to Floor brokers prior to the Exchanges' conversion to a more automated ''Hybrid Market,'' they do not articulate how this former practice is relevant to whether the proposed provision of disaggregated order information to Floor members in the context of the current market models of the SROs is consistent with the Act.

When the Commission is engaged in rulemaking or the review of a rule filed by a self-regulatory organization, and is required to consider or determine whether an action is necessary or appropriate in the public interest, the Commission shall also consider, in addition to the protection of investors, whether the action will promote efficiency, competition, and capital formation.[55] Based on the evidence presented, the Commission notes that making the information that is proposed to be provided under this filing exclusively available to DMMs and Floor brokers could have a detrimental effect on competition between on-Floor and off-Floor members of the Exchanges. Moreover, while providing DMMs and Floor brokers with order information related to Floor broker interest may promote efficiency, the SROs have not demonstrated that other aspects of these proposals—specifically, providing DMMs and Floor brokers with order information about public orders on the Exchange books—would have a similar effect.

As noted above, Rule 700(b)(3) of the Commission's Rules of Practice states that ''[t]he burden to demonstrate that a proposed rule change is consistent with the Exchange Act and the rules and regulations issued thereunder * * * is on the self-regulatory organization that proposed the rule change'' and that a ''mere assertion that the proposed rule change is consistent with those requirements * * * is not sufficient.'' [56] For the reasons set forth above, the Commission does not believe that the SROs have met their burden to demonstrate that the proposed rule changes are consistent with the requirements of the Act and the rules and regulations thereunder.

IV. Conclusion

For the foregoing reasons, the Commission does not find that the proposed rule changes are consistent with the Act and the rules and regulations thereunder applicable to a national securities exchange, and, in particular, with Section 6(b)(5) of the Act.

It is therefore ordered, pursuant to Section 19(b)(2) of the Act,[57] that the proposed rule changes (SR–NYSE–2011–56 and SR–NYSEAmex–2011–86) be, and hereby are, disapproved.

For the Commission, by the Division of Trading and Markets, pursuant to delegated authority.[58]

Kevin M. O'Neill,

Deputy Secretary.

[FR Doc. 2012–17551 Filed 7–18–12; 8:45 am]

BILLING CODE 8011–01–P

[55] *See* 15 U.S.C. 78c(f).

[56] 17 CFR 201.700(b)(3).

[57] 15 U.S.C. 78s(b)(2).

[58] 17 CFR 200.30–3(a)(12).

SECURITIES AND EXCHANGE COMMISSION

[Release No. 34–67436; File No. SR–NYSEArca–2012–73]

Self-Regulatory Organizations; NYSE Arca, Inc.; Notice of Filing and Immediate Effectiveness of Proposed Rule Change Establishing a Fee for Television Distribution of the NYSE Arca Trades Data Product

July 13, 2012.

Pursuant to Section 19(b)(1) [1] of the Securities Exchange Act of 1934 (the ''Act'') [2] and Rule 19b-4 thereunder,[3] notice is hereby given that, on July 3, 2012, NYSE Arca, Inc. (the ''Exchange'' or ''NYSE Arca'') filed with the Securities and Exchange Commission (the ''Commission'') the proposed rule change as described in Items I, II, and III below, which Items have been prepared by the self-regulatory organization. The Commission is publishing this notice to solicit

[1] 15 U.S.C. 78s(b)(1).

[2] 15 U.S.C. 78a.

[3] 17 CFR 240.19b–4.

comments on the proposed rule change from interested persons.

I. Self-Regulatory Organization's Statement of the Terms of Substance of the Proposed Rule Change

The Exchange proposes to establish a fee for television distribution of the NYSE Arca Trades data product. The text of the proposed rule change is available on the Exchange's Web site at *www.nyse.com,* at the principal office of the Exchange, and at the Commission's Public Reference Room.

II. Self-Regulatory Organization's Statement of the Purpose of, and Statutory Basis for, the Proposed Rule Change

In its filing with the Commission, the self-regulatory organization included statements concerning the purpose of, and basis for, the proposed rule change and discussed any comments it received on the proposed rule change. The text of those statements may be examined at the places specified in Item IV below. The Exchange has prepared summaries, set forth in sections A, B, and C below, of the most significant parts of such statements.

A. Self-Regulatory Organization's Statement of the Purpose of, and the Statutory Basis for, the Proposed Rule Change

1. Purpose

The Exchange proposes to establish a fee for television distribution of the NYSE Arca Trades data product.

In 2009, the Commission approved the NYSE Arca Trades data product and its fees.[4] NYSE Arca Trades is a NYSE Arca-only market data service that allows a vendor to redistribute on a real-time basis the same last sale information that the Exchange reports under the Consolidated Tape Association (''CTA'') Plan and the NASDAQ Unlisted Trading Privileges Plan (''NASDAQ UTP Plan'') for including in those plans' consolidated data streams and certain other related data elements (''NYSE Arca Last Sale Information'').

In 2010, the Commission approved changes to the fees for NYSE Arca Trades that modified the professional subscriber fee to consolidate the per-display device fee for NYSE Arca Last Sale Information relating to Network A and Network B Eligible Securities and securities listed on NASDAQ and provide an alternative to the per-device fee based on the number of ''Subscriber Entitlements,'' rather the basis of the number of devices.[5] The Exchange charges the datafeed recipients (a) an access fee of $750 per month (the ''Access Fee''), and (b) at the election of the vendor, either (i) a device fee for professional subscribers of $10.00 per month or (ii) a fee based on the number of ''Subscriber Entitlements '' (the latter two fees together, ''User Fees'').[6]

The Exchange proposes to add a new fee category for NYSE Arca Trades to provide television broadcasters[7] with an alternative enterprise fee (the ''Broadcast Fee''). For the receipt of access to and the ability to display the datafeeds of the NYSE Arca Trades service by a television broadcaster, the Exchange proposes to charge a flat fee of $20,000 per month.[8] Broadcasters will not be required to track the number of viewers.

2. Statutory Basis

The Exchange believes that the proposed rule change is consistent with the provisions of Section 6 of the Securities Exchange Act of 1934 (the ''Act'')[9] in general and with Section 6(b)(4) and 6(b)(5) of the Act[10] in particular in that it provides an equitable allocation of reasonable fees among users and recipients of the data and is not designed to permit unfair discrimination among customers, issuers, and brokers. The proposed Broadcast Fee is reasonable, equitable, and not unfairly discriminatory because it will provide a convenient and easy-to-administer way for a television broadcaster to display real-time NYSE Arca-only data on television, thereby providing public investors and other market participants who watch the broadcaster's channel with another means to obtain current market data. The Exchange believes that the Broadcast Fee will be attractive to television broadcasters because it will enable them to provide market data to their viewers that will complement the broadcasters' news reporting services without the added administrative burden and cost of keeping track of the number of viewers of the datafeed. The proposed distribution method differs, however, from other distribution methods in that the data will be available in temporary, view-only mode on television screens.[11] Other available distribution methods for NYSE Arca Trades and alternative data products may allow the end-user to download and analyze last sale data in order to make trading decisions. For these reasons, the Exchange believes that establishing a different pricing scheme for television broadcasters is justified. The Exchange also believes that its pricing is reasonable in light of other similar products. By way of comparison, for example, the television ticker display fee for CTA Network A market data (i.e., consolidated last sale data for securities listed on the New York Stock Exchange) is based on the number of viewers of the ticker, and is capped at $125,000 month, and the television ticker display fee for NASDAQ securities, similarly based on the number of households reached by the broadcaster, is capped at $50,000. Both of these products require the broadcaster to track the number of viewers of the ticker.[12]

The existence of alternatives to the NYSE Arca Trades data product, including real-time consolidated data, free delayed consolidated data, and proprietary last sale data from other sources, ensures that the Exchange cannot set unreasonable fees, or fees that are unreasonably discriminatory, when vendors and subscribers can elect such alternatives. The recent decision of the United States Court of Appeals for the District of Columbia Circuit in *NetCoalition* v. *SEC,* No. 09–1042 (DC Cir. 2010), upheld the Commission's reliance upon the existence of competitive market mechanisms to set reasonable and equitably allocated fees for proprietary market data:

> In fact, the legislative history indicates that the Congress intended that the market system 'evolve through the interplay of competitive forces as unnecessary regulatory restrictions are removed' and that the SEC wield its regulatory power 'in those situations where competition may not be sufficient,' such as in the creation of a 'consolidated transactional reporting system.'

NetCoalition at 15 (quoting H.R. Rep. No. 94–229 at 92 (1975), *as reprinted in* 1975 U.S.C.C.A.N. 321, 323). The court agreed with the Commission's conclusion that ''Congress intended that 'competitive forces should dictate the services and practices that constitute the

[4] *See* Securities Exchange Act Release No. 59598 (Mar. 18, 2009); 74 FR 12919 (Mar. 25, 2009) (SR–NYSEArca–2009–05).

[5] *See* Securities Exchange Act Release No. 62188 (May 27, 2010); 75 FR 31484 (June 3, 2010) (SR–NYSEArca–2010–23).

[6] *Id.* at 31485–31486.

[7] Television broadcast can be through cable, satellite, or traditional means.

[8] Although the Broadcast Fee will not vary based on the amount of time that the datafeed is displayed during the day or the number of channels the broadcaster utilizes, it will be prorated if a television broadcaster initiates the service during the middle of a month.

[9] 15 U.S.C. 78f(b).

[10] 15 U.S.C. 78f(b)(4) and (5).

[11] A television broadcaster could elect to combine for broadcast the NYSE Arca Trades data with other data available to it for broadcast.

[12] The Network A Rate Schedule is available at *http://www.nyxdata.com/CTA. See also* NASDAQ Rule 7039, which sets forth fees for the distribution of NASDAQ Last Sale Data Products via Television.

U.S. national market system for trading equity securities.' '' [13]

As explained below in the Exchange's Statement on Burden on Competition, the Exchange believes that there is substantial evidence of competition in the marketplace for data and that the Commission can rely upon such evidence in concluding that the fees established in this filing are the product of competition and therefore satisfy the relevant statutory standards.[14]

As the *NetCoalition* decision noted, the Commission is not required to undertake a cost-of-service or ratemaking approach, and the Exchange incorporates by reference into this proposed rule change its analysis of this topic in another recent rule filing.[15]

For these reasons, the Exchange believes that the proposed fee is reasonable, equitable, and not unfairly discriminatory.

B. Self-Regulatory Organization's Statement on Burden on Competition

The Exchange does not believe that the proposed rule change will impose any burden on competition that is not necessary or appropriate in furtherance of the purposes of the Act. An exchange's ability to price its datafeed products is constrained by (1) competition among exchanges and other trading platforms that compete with one another in a variety of dimensions, (2) the existence of inexpensive real-time consolidated data and free delayed consolidated data, and (3) the inherent contestability of the market for proprietary last sale data.

The market for proprietary last sale data products is currently competitive and inherently contestable because there is fierce competition for the inputs necessary to the creation of proprietary data and strict pricing discipline for the proprietary products themselves. Numerous exchanges compete with each other for listings, trades, and market data itself, providing virtually limitless opportunities for entrepreneurs who wish to produce and distribute their own market data. This proprietary data is produced by each individual exchange, as well as other entities, in a vigorously competitive market.

It is common for broker-dealers to further exploit this competition by sending their order flow and transaction reports to multiple markets, rather than providing them all to a single market. As a recent Commission Concept Release noted, the ''current market structure can be described as dispersed and complex'' with ''trading volume * * * dispersed among many highly automated trading centers that compete for order flow in the same stocks'' and ''trading centers offer[ing] a wide range of services that are designed to attract different types of market participants with varying trading needs.'' [16]

Competitive markets for order flow, executions, and transaction reports provide pricing discipline for the inputs of proprietary data products and therefore constrain markets from overpricing proprietary market data. The U.S. Department of Justice recently acknowledged the aggressive competition among exchanges. In announcing the abandoned bid for NYSE Euronext by NASDAQ OMX Group Inc. and IntercontinentalExchange Inc., Assistant Attorney General Christine Varney stated that exchanges ''compete head to head to offer real-time equity data products. These data products include the best bid and offer of every exchange and information on each equity trade, including the last sale.'' [17]

Transaction execution and proprietary data products are complementary in that market data is both an input and a byproduct of the execution service. In fact, market data and trade execution are a paradigmatic example of joint products with joint costs. The decision whether and on which platform to post an order will depend on the attributes of the platform where the order can be posted, including the execution fees, data quality, and price and distribution of its data products. Without trade executions, exchange data products cannot exist.

Further, data products are valuable to many end users only insofar as they provide information that end users expect will assist them or their customers in making trading decisions. The Exchange notes in that respect that making the NYSE Arca Trades service available on television at a more economical and easier to administer fee would encourage more television broadcasters to choose to offer the datafeed and thereby benefit public investors and other market participants who follow market developments through that medium by providing them with a convenient way to track price trends while watching news programs during the course of the trading day, thereby complementing NYSE Arca Trades offerings through other means.

The costs of producing market data include not only the costs of the data distribution infrastructure, but also the costs of designing, maintaining, and operating the exchange's transaction execution platform and the cost of regulating the exchange to ensure its fair operation and maintain investor confidence. The total return that a trading platform earns reflects the revenues it receives from both products and the joint costs it incurs. Moreover, an exchange's broker-dealer customers view the costs of transaction executions and of data as a unified cost of doing business with the exchange.

Similarly, in the case of products that are distributed through market data vendors, the vendors provide price discipline for proprietary data products because they control the primary means of access to certain end users. Vendors impose price restraints based upon their business models. For example, vendors such as Bloomberg and Thomson Reuters that assess a surcharge on data they sell may refuse to offer proprietary products that end users will not purchase in sufficient numbers. Internet portals, such as Google, impose a discipline by providing only data that will enable them to attract ''eyeballs'' that contribute to their advertising revenue. Similarly, television broadcasters will not elect to display NYSE Arca Trades unless they believe it will help them attract or maintain viewers.

Other market participants have noted that the liquidity provided by the order book, trade execution, core market data, and non-core market data are joint products of a joint platform and have common costs.[18] The Exchange agrees

[13] *NetCoalition* at 16.

[14] Section 916 of the Dodd-Frank Wall Street Reform and Consumer Protection Act of 2010 (''Dodd-Frank Act'') amended paragraph (A) of Section 19(b)(3) of the Act, 15 U.S.C. 78s(b)(3), to make clear that all exchange fees for market data may be filed by exchanges on an immediately effective basis.

[15] *See* Securities Exchange Act Release No. 63291 (Nov. 9, 2010), 75 FR 70311 (Nov. 17, 2010) (SR–NYSEArca-2010–97).

[16] Concept Release on Equity Market Structure, Securities Exchange Act Release No. 61358 (Jan. 14, 2010), 75 FR 3594 (Jan. 22, 2010) (File No. S7–02–10). This Concept Release included data from the third quarter of 2009 showing that no market center traded more than 20% of the volume of listed stocks, further evidencing the dispersal of and competition for trading activity. *Id.* at 3598.

[17] Press Release, U.S. Department of Justice, Assistant Attorney General Christine Varney Holds Conference Call Regarding NASDAQ OMX Group Inc. and IntercontinentalExchange Inc. Abandoning Their Bid for NYSE Euronext (May 16, 2011), available at *http://www.justice.gov/iso/opa/atr/speeches/2011/at-speech-110516.html.*

[18] *See* Securities Exchange Act Release No. 62887 (Sept. 10, 2010), 75 FR 57092, 57095 (Sept. 17, 2010) (SR–Phlx–2010–121); Securities Exchange Act Release No. 62907 (Sept. 14, 2010), 75 FR 57314, 57317 (Sept. 20, 2010) (SR–NASDAQ–2010–110); and Securities Exchange Act Release No. 62908 (Sept. 14, 2010) (SR–NASDAQ–2010–111), 75 FR 57321, 57324 (Sept. 20, 2010) (''all of the exchange's costs are incurred for the unified purposes of attracting order flow, executing and/or routing orders, and generating and selling data

Continued

with and adopts those discussions and the arguments therein. The Exchange also notes that the economics literature confirms that there is no way to allocate common costs between joint products that would shed any light on competitive or efficient pricing.[19]

Analyzing the cost of market data distribution in isolation from the cost of all of the inputs supporting the creation of market data will inevitably underestimate the cost of the data. Thus, because it is impossible to create data without a fast, technologically robust, and well-regulated execution system, system costs and regulatory costs affect the price of market data. It would be equally misleading, however, to attribute all of an exchange's costs to the market data portion of an exchange's joint product. Rather, all of an exchange's costs are incurred for the unified purposes of attracting order flow, executing and/or routing orders, and generating and selling data about market activity. The total return that an exchange earns reflects the revenues it receives from the joint products and the total costs of the joint products.

Competition among trading platforms can be expected to constrain the aggregate return that each platform earns from the sale of its joint products, but different platforms may choose from a range of possible, and equally reasonable, pricing strategies as the means of recovering total costs. For example, some platforms may choose to pay rebates to attract orders, charge relatively low prices for market information (or provide information free of charge), and charge relatively high prices for accessing posted liquidity. Other platforms may choose a strategy of paying lower rebates (or no rebates) to attract orders, setting relatively high prices for market information, and setting relatively low prices for accessing posted liquidity. In this environment, there is no economic basis for regulating maximum prices for one of the joint products in an industry in which suppliers face competitive constraints with regard to the joint offering.

The level of competition and contestability in the market is evident in the numerous alternative venues that compete for order flow, including 12 equities self-regulatory organization (''SRO'') markets, as well as internalizing broker-dealers (''BDs'') and various forms of alternative trading systems (''ATSs''), including dark pools and electronic communication networks (''ECNs''). Each SRO market competes to produce transaction reports via trade executions, and two FINRA-regulated Trade Reporting Facilities (''TRFs'') compete to attract internalized transaction reports.

The large number of SROs, TRFs, BDs, and ATSs that currently produce proprietary data or are currently capable of producing it provides further pricing discipline for proprietary data products. Each SRO, TRF, ATS, and BD is currently permitted to produce proprietary data products, and many currently do or have announced plans to do so, including but not limited to the Exchange, NYSE, NYSE Amex, NASDAQ OMX, BATS, and Direct Edge.

The fact that proprietary data from ATSs, BDs, and vendors can bypass SROs is significant in two respects. First, non-SROs can compete directly with SROs for the production and sale of proprietary data products. Second, because a single order or transaction report can appear in an SRO proprietary product, a non-SRO proprietary product, or both, the amount of data available via proprietary products is greater in size than the actual number of orders and transaction reports that exist in the marketplace. Because market data users can thus find suitable substitutes for most proprietary market data products (in this case both a CTA product and a NASDAQ proprietary product are direct alternatives), a market that overprices its market data products stands a high risk that users may substitute another source of market information for its own.

Moreover, consolidated data provides two additional measures of pricing discipline for proprietary data products that are a subset of the consolidated data stream. First, the consolidated data is widely available in real-time at $1 per month for non-professional users. Second, consolidated data is also available at no cost with a 15- or 20-minute delay. Because consolidated data contains marketwide information, it effectively places a cap on the fees assessed for proprietary data (such as last sale data) that is simply a subset of the consolidated data. The mere availability of low-cost or free consolidated data provides a powerful form of pricing discipline for proprietary data products that contain data elements that are a subset of the consolidated data, by highlighting the optional nature of proprietary products. The Exchange notes that its Broadcast Fee for NYSE Arca Trades is substantially less than the fee for a similar CTA product.

In addition to the competition and price discipline described above, the market for proprietary data products is also highly contestable because market entry is rapid, inexpensive, and profitable. The history of electronic trading is replete with examples of entrants that swiftly grew into some of the largest electronic trading platforms and proprietary data producers: Archipelago, Bloomberg Tradebook, Island, RediBook, Attain, TrackECN, BATS Trading and Direct Edge. Today, BATS and Direct Edge provide data at no charge on their Web sites in order to attract more order flow, and use market data revenue rebates from resulting additional executions to maintain low execution charges for their users.[20]

In establishing the Broadcast Fee for the NYSE Arca Trades Service, the Exchange considered the competitiveness of the market for data and all of the implications of that competition. The Exchange believes that it has considered all relevant factors and has not considered irrelevant factors in order to establish fair, reasonable, and not unreasonably discriminatory fees and an equitable allocation of fees among all users. The existence of numerous alternatives to the Exchange's product, including real-time consolidated data, free delayed consolidated data, and proprietary data from other sources, ensures that the

about market activity. The total return that an exchange earns reflects the revenues it receives from the joint products and the total costs of the joint products.''); *see also* August 1, 2008 Comment Letter of Jeffrey S. Davis, Vice President and Deputy General Counsel, NASDAQ OMX Group, Inc., Statement of Janusz Ordover and Gustavo Bamberger (''because market data is both an input to and a byproduct of executing trades on a particular platform, market data and trade execution services are an example of 'joint products' with 'joint costs.' ''), attachment at pg. 4, available at *www.sec.gov/comments/34-57917/3457917-12.pdf.*

[19] *See generally* Mark Hirschey, Fundamentals of Managerial Economics, at 600 (2009) (''It is important to note, however, that although it is possible to determine the separate marginal costs of goods produced in variable proportions, it is impossible to determine their individual average costs. This is because common costs are expenses necessary for manufacture of a joint product. Common costs of production—raw material and equipment costs, management expenses, and other overhead—cannot be allocated to each individual by-product on any economically sound basis.* * * Any allocation of common costs is wrong and arbitrary.''). This is not new economic theory. *See, e.g.*, F.W. Taussig, ''A Contribution to the Theory of Railway Rates,'' *Quarterly Journal of Economics* V(4) 438, 465 (July 1891) (''Yet, surely, the division is purely arbitrary. These items of cost, in fact, are jointly incurred for both sorts of traffic; and I cannot share the hope entertained by the statistician of the Commission, Professor Henry C. Adams, that we shall ever reach a mode of apportionment that will lead to trustworthy results.'').

[20] This is simply a securities market-specific example of the well-established principle that in certain circumstances more sales at lower margins can be more profitable than fewer sales at higher margins; this example is additional evidence that market data is an inherent part of a market's joint platform.

Exchange cannot set unreasonable fees, or fees that are unreasonably discriminatory, when vendors and subscribers can elect these alternatives. Accordingly, the Exchange believes that the acceptance of datafeed products in the marketplace demonstrates the consistency of these fees with applicable statutory standards.

C. Self-Regulatory Organization's Statement on Comments on the Proposed Rule Change Received From Members, Participants, or Others

No written comments were solicited or received with respect to the proposed rule change.

III. Date of Effectiveness of the Proposed Rule Change and Timing for Commission Action

The foregoing rule change is effective upon filing pursuant to Section 19(b)(3)(A) [21] of the Act and subparagraph (f)(2) of Rule 19b–4 [22] thereunder, because it establishes a due, fee, or other charge imposed by the NYSE Arca.

At any time within 60 days of the filing of such proposed rule change, the Commission summarily may temporarily suspend such rule change if it appears to the Commission that such action is necessary or appropriate in the public interest, for the protection of investors, or otherwise in furtherance of the purposes of the Act.

IV. Solicitation of Comments

Interested persons are invited to submit written data, views, and arguments concerning the foregoing, including whether the proposed rule change is consistent with the Act. Comments may be submitted by any of the following methods:

Electronic Comments

- Use the Commission's Internet comment form (*http://www.sec.gov/rules/sro.shtml*); or
- Send an email to *rule-comments@sec.gov.* Please include File Number SR–NYSEArca–2012–73 on the subject line.

Paper Comments

- Send paper comments in triplicate to Elizabeth M. Murphy, Secretary, Securities and Exchange Commission, 100 F Street NE., Washington, DC 20549–1090.

All submissions should refer to File Number SR–NYSEArca–2012–73. This file number should be included on the subject line if email is used. To help the Commission process and review your comments more efficiently, please use only one method. The Commission will post all comments on the Commission's Internet Web site (*http://www.sec.gov/rules/sro.shtml*). Copies of the submission, all subsequent amendments, all written statements with respect to the proposed rule change that are filed with the Commission, and all written communications relating to the proposed rule change between the Commission and any person, other than those that may be withheld from the public in accordance with the provisions of 5 U.S.C. 552, will be available for Web site viewing and printing in the Commission's Public Reference Room, 100 F Street NE., Washington, DC 20549, on official business days between the hours of 10:00 a.m. and 3:00 p.m. Copies of such filing also will be available for inspection and copying at the principal offices of the Exchange. All comments received will be posted without change; the Commission does not edit personal identifying information from submissions. You should submit only information that you wish to make available publicly. All submissions should refer to File Number SR–NYSEArca–2012–73, and should be submitted on or before August 9, 2012.

For the Commission, by the Division of Trading and Markets, pursuant to delegated authority.[23]

Kevin M. O'Neill,

Deputy Secretary.

[FR Doc. 2012–17550 Filed 7–18–12; 8:45 am]

BILLING CODE 8011–01–P

[21] 15 U.S.C. 78s(b)(3)(A).

[22] 17 CFR 240.19b–4(f)(2).

[23] 17 CFR 200.30–3(a)(12).

SECURITIES AND EXCHANGE COMMISSION

[Release No. 34–67435; File No. SR–NYSEArca–2012–45]

Self-Regulatory Organizations; NYSE Arca, Inc.; Order Granting Approval of Proposed Rule Change Amending Its Rules To Reflect the Merger of Archipelago Holdings, Inc. (''Archipelago Holdings''), An Intermediate Holding Company, Into and With NYSE Group, Inc., Thereby Eliminating Archipelago Holdings From the Ownership Structure of the Exchange

July 13, 2012.

I. Introduction

On May 14, 2012, NYSE Arca, Inc. (''NYSE Arca'' or ''Exchange'') filed with the Securities and Exchange Commission (''Commission''), pursuant to Section 19(b)(1) of the Securities Exchange Act of 1934 (''Act'') [1] and Rule 19b–4 thereunder,[2] proposed rule changes to reflect the merger of Archipelago Holdings, Inc. (''Archipelago Holdings''), an intermediate holding company, into and with NYSE Group, Inc. (''NYSE Group''), thereby eliminating Archipelago Holdings from the ownership structure of the Exchange (the ''Merger''). The proposed rule changes were published for comment in the **Federal Register** on May 31, 2012.[3] The Commission received no comment letters on the proposal. The Commission has reviewed carefully the proposed rule changes and finds that the proposed rule changes are consistent with the requirements of the Act and the rules and regulations thereunder applicable to a national securities exchange.[4] This order approves the proposed rule changes.

II. Description

NYSE Euronext intends to merge Archipelago Holdings with and into NYSE Group, effective following approval of the proposed rule change.[5] According to the Exchange, the reason for the Merger is to eliminate an unnecessary intermediate holding company.[6] Following the Merger, the Exchange would continue to be wholly-owned by NYSE Arca Holdings, which in turn would be wholly-owned by NYSE Group, which in turn would be wholly-owned by NYSE Euronext.

The Exchange has submitted its proposal to (i) Amend and restate the Amended and Restated Certificate of Incorporation of NYSE Arca Holdings, Inc. (the ''NYSE Arca Holdings Certificate''), (ii) amend and restate the NYSE Arca Holdings, Inc. Bylaws (''NYSE Arca Holdings Bylaws'') as required by the NYSE Arca Holdings Certificate, (iii) amend the rules of NYSE Arca and NYSE Arca Equities, Inc., (iv) delete in its entirety the Amended and Restated Certificate of Archipelago Holdings (''Archipelago

[1] 15 U.S.C. 78s(b)(1).

[2] 17 CFR 240.19b–4.

[3] *See* Securities Exchange Act Release No. 67058 (May 31, 2012), 77 FR 32155 (''Notice'').

[4] In approving the proposed rule changes, the Commission has considered their impact on efficiency, competition, and capital formation. *See* 15 U.S.C. 78c(f).

[5] Currently, NYSE Arca Holdings, Inc. (''NYSE Arca Holdings'') owns all of the equity interest of the Exchange. Archipelago Holdings owns all of the equity interest of NYSE Arca Holdings, and NYSE Group owns all of the equity interest of Archipelago Holdings. NYSE Euronext owns all of the equity interest of NYSE Group.

[6] *See* Notice, 77 FR at 32156.

Holdings Certificate''), (v) delete in its entirety the Amended and Restated Bylaws of Archipelago Holdings (''Archipelago Holdings Bylaws'') and (vi) file the resolution (the ''Resolution'') of the Board of Directors of NYSE Arca Holdings (the ''Board'') in connection with the Merger.

Section 19(b) of the Act and Rule 19b–4 thereunder require a self-regulatory organization (''SRO'') to file proposed rule changes with the Commission. Although NYSE Arca Holdings and Archipelago Holdings are not SROs, the NYSE Arca Holdings Certificate, NYSE Arca Holdings Bylaws, Archipelago Holdings Certificate, and Archipelago Holdings Bylaws, along with other corporate documents, are rules of the Exchange [7] and must be filed with the Commission pursuant to Section 19(b)(4) of the Act and Rule 19b–4 thereunder. Accordingly, the Exchange filed the NYSE Arca Holdings Certificate and NYSE Arca Holdings Bylaws with the Commission, along with other corporate governance documents.[8]

A. Waiver of the NYSE Arca Holdings Ownership and Voting Limits

The NYSE Arca Holdings Certificate imposes certain ownership and voting restrictions on the shares of NYSE Arca Holdings. Specifically, Article 9, Section 1(b)(i) of the NYSE Arca Holdings Certificate provides that for so long as NYSE Arca Holdings directly or indirectly controls the Exchange, no Person either alone or together with its Related Persons,[9] may own, directly or indirectly, of record or beneficially shares of the capital stock (whether common or preferred stock) of NYSE Arca Holdings constituting more than 40% of the outstanding shares of any class of capital stock of NYSE Arca Holdings (the ''Ownership Limit'') unless the Board has adopted an amendment to the NYSE Arca Holdings Bylaws waiving such a restriction. In connection with such amendment, the Board must adopt resolutions stating that: such amendment will not impair the ability of the Exchange to carry out its functions and responsibilities under the Securities Exchange Act of 1934, as amended (the ''Act''), and the rules thereunder; is otherwise in the best interests of NYSE Arca Holdings, its stockholders, and the Exchange; and will not impair the ability of the Commission to enforce the Act. Such amendment is not effective until approved by the Commission. The Board also must find that no such Person or Related Person is subject to a statutory disqualification under Section 3(a)(39) of the Act. Similarly, Article 9, Section 1(c) of the NYSE Arca Holdings Certificate provides that no Person, either alone or together with its Related Persons, may directly or indirectly vote more than 20% of the shares of NYSE Arca Holdings (the ''Voting Limit'') unless the Board adopts an amendment to the NYSE Arca Holdings Bylaws waiving such a restriction and, in connection with such amendment, adopts resolutions and makes a determination with respect to statutory disqualification substantially the same as those described above for the Ownership Limit.[10]

The Board made these findings as set forth in the Resolution. The Board found, in pertinent part, that (1) The Merger will not impair the ability of the Exchange to carry out its functions and responsibilities as an ''exchange'' under the Act and the rules promulgated thereunder; (2) the Merger will not impair the ability of the Commission to enforce the Act; (3) neither NYSE Group nor any of its Related Persons is subject to any applicable ''statutory disqualification'' within the meaning of Section 3(a)(39) of the Act; and (4) neither NYSE Group nor any of its Related Persons is an ETP Holder of NYSE Arca Equities, Inc. or an OTP Firm of the Exchange, except as permitted by Article 9, Section 4 of the NYSE Arca Holdings Certificate.

The Exchange also proposes to amend the NYSE Arca Holdings Bylaws by adding a new Article 11 that sets forth the waiver of the Ownership and Voting Limits, as required by the NYSE Arca Holdings Certificate, solely for purposes of the Merger.

B. Changes in Corporate Structure and Deletion of Duplicative or Obsolete Text

The proposed rule changes reflect the elimination of Archipelago Holdings from the Exchange's ownership structure and delete duplicative or obsolete text. For example, the Exchange proposes to replace references to Archipelago Holdings in Article 9, Section 4 of the NYSE Arca Holdings Certificate with references to NYSE Group. In addition, the Exchange proposes to delete the last sentence of that section, which relates to certain voting and ownership restrictions that were put in place when the Exchange combined with the New York Stock Exchange in 2005 but have been superseded by other requirements.[11]

The Exchange proposes to delete in its entirety the text of the Archipelago Holdings Certificate and the Archipelago Holdings Bylaws because Archipelago Holdings will no longer exist upon consummation of the Merger. Accordingly, these documents will no longer be rules of the Exchange.[12]

Discussion

The Commission finds that the proposed rule changes are consistent with the requirements of the Act and the rules and regulations thereunder applicable to a national securities

[7] *See* Section 3(a)(27) of the Act, 15 U.S.C. 78c(a)(27).

[8] *See* proposed Second Amended and Restated Certificate of Incorporation of NYSE Arca Holdings, attached as Exhibit A to the Notice; proposed Amended and Restated Bylaws of NYSE Arca Holdings, attached as Exhibit B to the Notice. The Exchange also filed the proposed rule changes to its rules as well as the rules of NYSE Arca Equities, Inc., attached as Exhibit C to the Notice. The Exchange also proposes to delete the entirety of the Amended and Restated Certificate of Incorporation of Archipelago Holdings and the Amended and Restated Bylaws of Archipelago Holdings, attached as Exhibit D and Exhibit E, respectively, to the Notice. The Exchange also filed the Resolution made by the Board as Exhibit F to the Notice. These exhibits are available on the Commission's Web site (*http://www.sec.gov/rules/sro.shtml*) and at the Commission's Public Reference Room.

[9] The terms ''Person'' and ''Related Persons'' are defined in the NYSE Arca Holdings Certificate.

[10] Article 9, Section 4 of the NYSE Arca Holdings Certificate currently provides certain exceptions to these ownership and voting restrictions for Archipelago Holdings.

[11] *See* Notice, 77 FR at 32156; *see also* Securities Exchange Act Release No. 55294 (Feb. 14, 2007), 72 FR 8046 (Feb. 22, 2007) (SR–NYSEArca–2007–05); *see also* Securities Exchange Act Release No. 55293 (Feb. 14, 2007), 72 FR 8033 (Feb. 22, 2007) (SR–NYSE–2006–120).

[12] Other changes include amending the NYSE Arca Holdings Bylaws to change references to the Pacific Exchange, Inc. to NYSE Arca, Inc.; changing references to PCX Holdings, Inc. to NYSE Arca Holdings; and deleting obsolete references to trading in minimum lots. The Exchange also proposes to delete NYSE Arca Rule 1.1(cc) and (gg), which set forth the definitions for Archipelago Holdings and Related Person, and to delete NYSE Arca Rule 3.4, which sets forth ownership and voting restrictions for Archipelago Holdings. Upon the elimination of Archipelago Holdings, NYSE Group would be the next holding company, and voting and ownership restrictions are currently set forth in its Second Amended and Restated Certificate of Incorporation of NYSE Group, Inc. (''NYSE Group Certificate'') in Article IV, Section 4(b). NYSE Arca Equities Rule 14.3(b) provides that all officers and directors of Archipelago Holdings shall be deemed to be officers and directors of the Exchange and NYSE Arca Equities for purposes of, and subject to oversight pursuant to, the Act. NYSE Arca Equities Rule 14.3(d) provides that Archipelago Holdings must maintain all books and records related to the Exchange within the United States. The Exchange proposes to delete this text and make a conforming change to NYSE Arca Equities Rule 14.3(c). Comparable provisions are already contained in NYSE Group's governing documents. The Exchange notes that, under Article IX of the NYSE Group Certificate, NYSE Group's directors and officers already are subject to the jurisdiction of the Commission, and under Article X, NYSE Group's books and records relating to the Exchange must be maintained within the United States. *See* Notice, 77 FR at 32156.

exchange.[13] Specifically, the Commission finds that the proposal is consistent with Section 6(b)(5) of the Act,[14] which requires, among other things, that the rules of a national securities exchange be designed to prevent fraudulent and manipulative acts and practices, to promote just and equitable principles of trade, to foster cooperation and coordination with persons engaged in facilitating transactions in securities, to remove impediments to and perfect the mechanism of a free and open market and a national market system, and, in general, to protect investors and the public interest.

The proposal would accommodate the merger of Archipelago Holdings, an intermediate holding company, into and with NYSE Group, thereby eliminating Archipelago Holdings from the ownership structure of the Exchange. The Commission notes that the proposed rule changes would otherwise have no substantive impact on other rules of the Exchange, including those concerning the voting and ownership restrictions that currently apply to the Exchange and its affiliates.[15] The Exchange would continue as an indirect wholly-owned subsidiary of NYSE Euronext. In addition, the Commission notes that the Board made certain findings set forth in the Resolution that the direct ownership of NYSE Arca Holdings by NYSE Group as contemplated by the Merger is in the best interests of NYSE Arca Holdings, its shareholders, and the Exchange. In addition, the Board found that neither NYSE Group, nor any of its Related Persons, is (1) An ETP Holder of NYSE Arca Equities, Inc. (except as otherwise permitted by the NYSE Arca Holdings Certificate) (2) an OTP Holder of the Exchange (except as otherwise permitted by the NYSE Arca Holdings Certificate); or (3) subject to any ''statutory disqualification.'' [16]

In light of these representations and findings, the Commission believes that the proposed rule changes are consistent with the Act and will not impair the ability of the Commission or the Exchange to discharge their respective responsibilities under the Act.

IV. Conclusion

It is therefore ordered, pursuant to Section 19(b)(2) of the Act,[17] that the proposed rule change (SR–NYSEArca–2012–45) be, and it hereby is, approved.

For the Commission, by the Division of Trading and Markets, pursuant to delegated authority.[18]

Kevin M. O'Neill,

Deputy Secretary.

[FR Doc. 2012–17549 Filed 7–18–12; 8:45 am]

BILLING CODE 8011–01–P

[13] In approving this proposed rule change, the Commission has considered the proposed rule's impact on efficiency, competition, and capital formation. *See* 15 U.S.C. 78c(f).

[14] 15 U.S.C. 78f(b)(5).

[15] *See supra* note 11.

[16] *See* Resolution.

[17] 15 U.S.C. 78s(b)(2).

[18] 17 CFR 200.30–3(a)(12).

SECURITIES AND EXCHANGE COMMISSION

[Release No. 34–67438; File No. SR–NYSEMKT–2012–19]

Self-Regulatory Organizations; NYSE MKT LLC; Notice of Filing and Immediate Effectiveness of Proposed Rule Change Establishing a Fee for Television Distribution of the NYSE MKT Trades Data Product

July 13, 2012.

Pursuant to Section 19(b)(1) [1] of the Securities Exchange Act of 1934 (the ''Act'') [2] and Rule 19b–4 thereunder,[3] notice is hereby given that, on July 3, 2012, NYSE MKT LLC (the ''Exchange'' or ''NYSE MKT'') filed with the Securities and Exchange Commission (the ''Commission'') the proposed rule change as described in Items I, II, and III below, which Items have been prepared by the self-regulatory organization. The Commission is publishing this notice to solicit comments on the proposed rule change from interested persons.

I. Self-Regulatory Organization's Statement of the Terms of Substance of the Proposed Rule Change

The Exchange proposes to establish a fee for television distribution of the NYSE MKT Trades data product. The text of the proposed rule change is available on the Exchange's Web site at *www.nyse.com,* at the principal office of the Exchange, and at the Commission's Public Reference Room.

II. Self-Regulatory Organization's Statement of the Purpose of, and Statutory Basis for, the Proposed Rule Change

In its filing with the Commission, the self-regulatory organization included statements concerning the purpose of, and basis for, the proposed rule change and discussed any comments it received on the proposed rule change. The text of those statements may be examined at the places specified in Item IV below. The Exchange has prepared summaries, set forth in sections A, B, and C below, of the most significant parts of such statements.

A. Self-Regulatory Organization's Statement of the Purpose of, and the Statutory Basis for, the Proposed Rule Change

1. Purpose

The Exchange proposes to establish a fee for television distribution of the NYSE MKT Trades data product.

In 2010, the Commission approved the NYSE MKT Trades data product and its fees.[4] NYSE MKT Trades is a NYSE MKT-only market data service that allows a vendor to redistribute on a real-time basis the same last sale information that the Exchange reports under the Consolidated Tape Association (''CTA'') Plan and the NASDAQ Unlisted Trading Privileges Plan (''NASDAQ UTP Plan'') for including in those plans' consolidated data streams and certain other related data elements (''NYSE MKT Last Sale Information''). The Exchange currently charges the datafeed recipients (a) an access fee of $750 per month (the ''Access Fee''),[5] and (b) at the election of the vendor, either (i) a device fee for professional subscribers of $10.00 per month or (ii) a fee based on the number of ''Subscriber Entitlements'' (the latter two fees together, ''User Fees'').

The Exchange proposes to add a new fee category for NYSE MKT Trades to provide television broadcasters [6] with an alternative enterprise fee (the ''Broadcast Fee''). For the receipt of access to and the ability to display the datafeeds of the NYSE MKT Trades service by a television broadcaster, the Exchange proposes to charge a flat fee of $5,000 per month.[7] Broadcasters will not be required to track the number of viewers.

2. Statutory Basis

The Exchange believes that the proposed rule change is consistent with the provisions of Section 6 of the

[1] 15 U.S.C. 78s(b)(1).

[2] 15 U.S.C. 78a.

[3] 17 CFR 240.19b–4.

[4] *See* Securities Exchange Act Release No. 62187 (May 27, 2010); 75 FR 31500 (Jun. 3, 2010) (SR–NYSEAmex–2010–35) (the ''2010 Release''). Since that filing, the Exchange has changed its name from NYSE Amex LLC to NYSE MKT LLC. *See* Securities Exchange Act Release No. 67037 (May 21, 2012), 77 FR 31415 (May 25, 2012) (SR–NYSEAmex–2012–32).

[5] The Access Fee also covers the NYSE MKT BBO service. *See* the 2010 Release at 31501.

[6] Television broadcast can be through cable, satellite, or traditional means.

[7] Although the Broadcast Fee will not vary based on the amount of time that the datafeed is displayed during the day or the number of channels the broadcaster utilizes, it will be prorated if a television broadcaster initiates the service during the middle of a month.

Securities Exchange Act of 1934 (the ''Act'') [8] in general and with Section 6(b)(4) and 6(b)(5) of the Act [9] in particular in that it provides an equitable allocation of reasonable fees among users and recipients of the data and is not designed to permit unfair discrimination among customers, issuers, and brokers. The proposed Broadcast Fee is reasonable, equitable, and not unfairly discriminatory because it will provide a convenient and easy-to-administer way for a television broadcaster to display real-time NYSE MKT-only data on television, thereby providing public investors and other market participants who watch the broadcaster's channel with another means to obtain current market data. The Exchange believes that the Broadcast Fee will be attractive to television broadcasters because it will enable them to provide market data to their viewers that will complement the broadcasters' news reporting services without the added administrative burden and cost of keeping track of the number of viewers of the datafeed. The proposed distribution method differs, however, from other distribution methods in that the data will be available in temporary, view-only mode on television screens.[10] Other available distribution methods for NYSE MKT Trades and alternative data products may allow the end-user to download and analyze last sale data in order to make trading decisions. For these reasons, the Exchange believes that establishing a different pricing scheme for television broadcasters is justified. The Exchange also believes that its pricing is reasonable in light of other similar products. By way of comparison, for example, the television ticker display fee for CTA Network A market data (i.e., consolidated last sale data for securities listed on the New York Stock Exchange) is based on the number of viewers of the ticker, and is capped at $125,000/month, and the television ticker display fee for NASDAQ securities, similarly based on the number of households reached by the broadcaster, is capped at $50,000. Both of these products require the broadcaster to track the number of viewers of the ticker.[11]

The existence of alternatives to the NYSE MKT Trades data product, including real-time consolidated data, free delayed consolidated data, and proprietary last sale data from other sources, ensures that the Exchange cannot set unreasonable fees, or fees that are unreasonably discriminatory, when vendors and subscribers can elect such alternatives. The recent decision of the United States Court of Appeals for the District of Columbia Circuit in *NetCoalition* v. *SEC,* No. 09–1042 (D.C. Cir. 2010), upheld the Commission's reliance upon the existence of competitive market mechanisms to set reasonable and equitably allocated fees for proprietary market data:

> In fact, the legislative history indicates that the Congress intended that the market system 'evolve through the interplay of competitive forces as unnecessary regulatory restrictions are removed' and that the SEC wield its regulatory power 'in those situations where competition may not be sufficient,' such as in the creation of a 'consolidated transactional reporting system.'

NetCoalition at 15 (quoting H.R. Rep. No. 94–229 at 92 (1975), *as reprinted in* 1975 U.S.C.C.A.N. 321, 323). The court agreed with the Commission's conclusion that ''Congress intended that 'competitive forces should dictate the services and practices that constitute the U.S. national market system for trading equity securities.' '' [12]

As explained below in the Exchange's Statement on Burden on Competition, the Exchange believes that there is substantial evidence of competition in the marketplace for data and that the Commission can rely upon such evidence in concluding that the fees established in this filing are the product of competition and therefore satisfy the relevant statutory standards.[13]

As the *NetCoalition* decision noted, the Commission is not required to undertake a cost-of-service or ratemaking approach, and the Exchange incorporates by reference into this proposed rule change its affiliate's analysis of this topic in another recent rule filing.[14]

For these reasons, the Exchange believes that the proposed fee is reasonable, equitable, and not unfairly discriminatory.

B. Self-Regulatory Organization's Statement on Burden on Competition

The Exchange does not believe that the proposed rule change will impose any burden on competition that is not necessary or appropriate in furtherance of the purposes of the Act. An exchange's ability to price its datafeed products is constrained by (1) Competition among exchanges and other trading platforms that compete with one another in a variety of dimensions, (2) the existence of inexpensive real-time consolidated data and free delayed consolidated data, and (3) the inherent contestability of the market for proprietary last sale data.

The market for proprietary last sale data products is currently competitive and inherently contestable because there is fierce competition for the inputs necessary to the creation of proprietary data and strict pricing discipline for the proprietary products themselves. Numerous exchanges compete with each other for listings, trades, and market data itself, providing virtually limitless opportunities for entrepreneurs who wish to produce and distribute their own market data. This proprietary data is produced by each individual exchange, as well as other entities, in a vigorously competitive market.

It is common for broker-dealers to further exploit this competition by sending their order flow and transaction reports to multiple markets, rather than providing them all to a single market. As a recent Commission Concept Release noted, the ''current market structure can be described as dispersed and complex'' with ''trading volume * * * dispersed among many highly automated trading centers that compete for order flow in the same stocks'' and ''trading centers offer[ing] a wide range of services that are designed to attract different types of market participants with varying trading needs.'' [15]

Competitive markets for order flow, executions, and transaction reports provide pricing discipline for the inputs of proprietary data products and therefore constrain markets from overpricing proprietary market data. The U.S. Department of Justice recently acknowledged the aggressive competition among exchanges. In announcing the abandoned bid for NYSE Euronext by NASDAQ OMX Group Inc. and

[8] 15 U.S.C. 78f(b).

[9] 15 U.S.C. 78f(b)(4) and (5).

[10] A television broadcaster could elect to combine for broadcast the NYSE MKT Trades data with other data available to it for broadcast.

[11] The Network A Rate Schedule is available at *http://www.nyxdata.com/CTA. See also* NASDAQ Rule 7039, which sets forth fees for the distribution of NASDAQ Last Sale Data Products via Television.

[12] *NetCoalition* at 16.

[13] Section 916 of the Dodd-Frank Wall Street Reform and Consumer Protection Act of 2010 (''Dodd-Frank Act'') amended paragraph (A) of Section 19(b)(3) of the Act, 15 U.S.C. 78s(b)(3), to make clear that all exchange fees for market data may be filed by exchanges on an immediately effective basis.

[14] *See* Securities Exchange Act Release No. 63291 (Nov. 9, 2010), 75 FR 70311 (Nov. 17, 2010) (SR–NYSEArca–2010–97).

[15] Concept Release on Equity Market Structure, Securities Exchange Act Release No. 61358 (Jan. 14, 2010), 75 FR 3594 (Jan. 22, 2010) (File No. S7–02–10). This Concept Release included data from the third quarter of 2009 showing that no market center traded more than 20% of the volume of listed stocks, further evidencing the dispersal of and competition for trading activity. *Id.* at 3598.

IntercontinentalExchange Inc., Assistant Attorney General Christine Varney stated that exchanges ''compete head to head to offer real-time equity data products. These data products include the best bid and offer of every exchange and information on each equity trade, including the last sale.'' [16]

Transaction execution and proprietary data products are complementary in that market data is both an input and a byproduct of the execution service. In fact, market data and trade execution are a paradigmatic example of joint products with joint costs. The decision whether and on which platform to post an order will depend on the attributes of the platform where the order can be posted, including the execution fees, data quality, and price and distribution of its data products. Without trade executions, exchange data products cannot exist.

Further, data products are valuable to many end users only insofar as they provide information that end users expect will assist them or their customers in making trading decisions. The Exchange notes in that respect that making the NYSE MKT Trades service available on television at a more economical and easier to administer fee would encourage more television broadcasters to choose to offer the datafeed and thereby benefit public investors and other market participants who follow market developments through that medium by providing them with a convenient way to track price trends while watching news programs during the course of the trading day, thereby complementing NYSE MKT Trades offerings through other means.

The costs of producing market data include not only the costs of the data distribution infrastructure, but also the costs of designing, maintaining, and operating the exchange's transaction execution platform and the cost of regulating the exchange to ensure its fair operation and maintain investor confidence. The total return that a trading platform earns reflects the revenues it receives from both products and the joint costs it incurs. Moreover, an exchange's broker-dealer customers view the costs of transaction executions and of data as a unified cost of doing business with the exchange.

Similarly, in the case of products that are distributed through market data vendors, the vendors provide price discipline for proprietary data products because they control the primary means of access to certain end users. Vendors impose price restraints based upon their business models. For example, vendors such as Bloomberg and Thomson Reuters that assess a surcharge on data they sell may refuse to offer proprietary products that end users will not purchase in sufficient numbers. Internet portals, such as Google, impose a discipline by providing only data that will enable them to attract ''eyeballs'' that contribute to their advertising revenue. Similarly, television broadcasters will not elect to display NYSE MKT Trades unless they believe it will help them attract or maintain viewers.

Other market participants have noted that the liquidity provided by the order book, trade execution, core market data, and non-core market data are joint products of a joint platform and have common costs.[17] The Exchange agrees with and adopts those discussions and the arguments therein. The Exchange also notes that the economics literature confirms that there is no way to allocate common costs between joint products that would shed any light on competitive or efficient pricing.[18]

Analyzing the cost of market data distribution in isolation from the cost of all of the inputs supporting the creation of market data will inevitably underestimate the cost of the data. Thus, because it is impossible to create data without a fast, technologically robust, and well-regulated execution system, system costs and regulatory costs affect the price of market data. It would be equally misleading, however, to attribute all of an exchange's costs to the market data portion of an exchange's joint product. Rather, all of an exchange's costs are incurred for the unified purposes of attracting order flow, executing and/or routing orders, and generating and selling data about market activity. The total return that an exchange earns reflects the revenues it receives from the joint products and the total costs of the joint products.

Competition among trading platforms can be expected to constrain the aggregate return that each platform earns from the sale of its joint products, but different platforms may choose from a range of possible, and equally reasonable, pricing strategies as the means of recovering total costs. For example, some platforms may choose to pay rebates to attract orders, charge relatively low prices for market information (or provide information free of charge), and charge relatively high prices for accessing posted liquidity. Other platforms may choose a strategy of paying lower rebates (or no rebates) to attract orders, setting relatively high prices for market information, and setting relatively low prices for accessing posted liquidity. In this environment, there is no economic basis for regulating maximum prices for one of the joint products in an industry in which suppliers face competitive constraints with regard to the joint offering.

The level of competition and contestability in the market is evident in the numerous alternative venues that compete for order flow, including 12 equities self-regulatory organization (''SRO'') markets, as well as internalizing broker-dealers (''BDs'') and various forms of alternative trading systems (''ATSs''), including dark pools and electronic communication networks (''ECNs''). Each SRO market competes to produce transaction reports via trade executions, and two FINRA-regulated Trade Reporting Facilities (''TRFs'') compete to attract internalized transaction reports.

[16] Press Release, U.S. Department of Justice, Assistant Attorney General Christine Varney Holds Conference Call Regarding NASDAQ OMX Group Inc. and IntercontinentalExchange Inc. Abandoning Their Bid for NYSE Euronext (May 16, 2011), available at *http://www.justice.gov/iso/opa/atr/speeches/2011/at-speech-110516.html.*

[17] *See* Securities Exchange Act Release No. 62887 (Sept. 10, 2010), 75 FR 57092, 57095 (Sept. 17, 2010) (SR–Phlx–2010–121); Securities Exchange Act Release No. 62907 (Sept. 14, 2010), 75 FR 57314, 57317 (Sept. 20, 2010) (SR–NASDAQ–2010–110); and Securities Exchange Act Release No. 62908 (Sept. 14, 2010) (SR–NASDAQ–2010–111), 75 FR 57321, 57324 (Sept. 20, 2010) (''all of the exchange's costs are incurred for the unified purposes of attracting order flow, executing and/or routing orders, and generating and selling data about market activity. The total return that an exchange earns reflects the revenues it receives from the joint products and the total costs of the joint products.''); *see also* August 1, 2008 Comment Letter of Jeffrey S. Davis, Vice President and Deputy General Counsel, NASDAQ OMX Group, Inc., Statement of Janusz Ordover and Gustavo Bamberger (''because market data is both an input to and a byproduct of executing trades on a particular platform, market data and trade execution services are an example of 'joint products' with 'joint costs.'''), attachment at pg. 4, available at *www.sec.gov/comments/34-57917/3457917-12.pdf.*

[18] *See generally* Mark Hirschey, Fundamentals of Managerial Economics, at 600 (2009) (''It is important to note, however, that although it is possible to determine the separate marginal costs of goods produced in variable proportions, it is impossible to determine their individual average costs. This is because common costs are expenses necessary for manufacture of a joint product. Common costs of production—raw material and equipment costs, management expenses, and other overhead—cannot be allocated to each individual by-product on any economically sound basis.* * * Any allocation of common costs is wrong and arbitrary.''). This is not new economic theory. *See, e.g.,* F.W. Taussig, ''A Contribution to the Theory of Railway Rates,'' *Quarterly Journal of Economics* V(4) 438, 465 (July 1891) (''Yet, surely, the division is purely arbitrary. These items of cost, in fact, are jointly incurred for both sorts of traffic; and I cannot share the hope entertained by the statistician of the Commission, Professor Henry C. Adams, that we shall ever reach a mode of apportionment that will lead to trustworthy results.'').

The large number of SROs, TRFs, BDs, and ATSs that currently produce proprietary data or are currently capable of producing it provides further pricing discipline for proprietary data products. Each SRO, TRF, ATS, and BD is currently permitted to produce proprietary data products, and many currently do or have announced plans to do so, including but not limited to the Exchange, NYSE, NYSE Arca, NASDAQ OMX, BATS, and Direct Edge.

The fact that proprietary data from ATSs, BDs, and vendors can bypass SROs is significant in two respects. First, non-SROs can compete directly with SROs for the production and sale of proprietary data products. Second, because a single order or transaction report can appear in an SRO proprietary product, a non-SRO proprietary product, or both, the amount of data available via proprietary products is greater in size than the actual number of orders and transaction reports that exist in the marketplace. Because market data users can thus find suitable substitutes for most proprietary market data products (in this case both a CTA product and a NASDAQ proprietary product are direct alternatives), a market that overprices its market data products stands a high risk that users may substitute another source of market information for its own.

Moreover, consolidated data provides two additional measures of pricing discipline for proprietary data products that are a subset of the consolidated data stream. First, the consolidated data is widely available in real-time at $1 per month for non-professional users. Second, consolidated data is also available at no cost with a 15- or 20-minute delay. Because consolidated data contains marketwide information, it effectively places a cap on the fees assessed for proprietary data (such as last sale data) that is simply a subset of the consolidated data. The mere availability of low-cost or free consolidated data provides a powerful form of pricing discipline for proprietary data products that contain data elements that are a subset of the consolidated data, by highlighting the optional nature of proprietary products. The Exchange notes that its Broadcast Fee for NYSE MKT Trades is substantially less than the fee for a similar CTA product.

In addition to the competition and price discipline described above, the market for proprietary data products is also highly contestable because market entry is rapid, inexpensive, and profitable. The history of electronic trading is replete with examples of entrants that swiftly grew into some of the largest electronic trading platforms and proprietary data producers: Archipelago, Bloomberg Tradebook, Island, RediBook, Attain, TrackECN, BATS Trading and Direct Edge. Today, BATS and Direct Edge provide data at no charge on their Web sites in order to attract more order flow, and use market data revenue rebates from resulting additional executions to maintain low execution charges for its users.[19]

In establishing the Broadcast Fee for the NYSE MKT Trades service, the Exchange considered the competitiveness of the market for data and all of the implications of that competition. The Exchange believes that it has considered all relevant factors and has not considered irrelevant factors in order to establish fair, reasonable, and not unreasonably discriminatory fees and an equitable allocation of fees among all users. The existence of numerous alternatives to the Exchange's product, including real-time consolidated data, free delayed consolidated data, and proprietary data from other sources, ensures that the Exchange cannot set unreasonable fees, or fees that are unreasonably discriminatory, when vendors and subscribers can elect these alternatives. Accordingly, the Exchange believes that the acceptance of datafeed products in the marketplace demonstrates the consistency of these fees with applicable statutory standards.

C. Self-Regulatory Organization's Statement on Comments on the Proposed Rule Change Received From Members, Participants, or Others

No written comments were solicited or received with respect to the proposed rule change.

III. Date of Effectiveness of the Proposed Rule Change and Timing for Commission Action

The foregoing rule change is effective upon filing pursuant to Section 19(b)(3)(A)[20] of the Act and subparagraph (f)(2) of Rule 19b–4[21] thereunder, because it establishes a due, fee, or other charge imposed by NYSE MKT.

At any time within 60 days of the filing of such proposed rule change, the Commission summarily may temporarily suspend such rule change if it appears to the Commission that such action is necessary or appropriate in the public interest, for the protection of investors, or otherwise in furtherance of the purposes of the Act.

IV. Solicitation of Comments

Interested persons are invited to submit written data, views, and arguments concerning the foregoing, including whether the proposed rule change is consistent with the Act. Comments may be submitted by any of the following methods:

Electronic Comments

- Use the Commission's Internet comment form (*http://www.sec.gov/rules/sro.shtml*); or
- Send an email to *rule-comments@sec.gov.* Please include File Number SR–NYSEMKT–2012–19 on the subject line.

Paper Comments

- Send paper comments in triplicate to Elizabeth M. Murphy, Secretary, Securities and Exchange Commission, 100 F Street NE., Washington, DC 20549–1090.

All submissions should refer to File Number SR–NYSEMKT–2012–19. This file number should be included on the subject line if email is used. To help the Commission process and review your comments more efficiently, please use only one method. The Commission will post all comments on the Commission's Internet Web site (*http://www.sec.gov/rules/sro.shtml*). Copies of the submission, all subsequent amendments, all written statements with respect to the proposed rule change that are filed with the Commission, and all written communications relating to the proposed rule change between the Commission and any person, other than those that may be withheld from the public in accordance with the provisions of 5 U.S.C. 552, will be available for Web site viewing and printing in the Commission's Public Reference Room, 100 F Street NE., Washington, DC 20549, on official business days between the hours of 10:00 a.m. and 3:00 p.m. Copies of the filing also will be available for inspection and copying at the principal office of the Exchange. All comments received will be posted without change; the Commission does not edit personal identifying information from submissions. You should submit only information that you wish to make available publicly. All submissions should refer to File Number SR–NYSEMKT–2012–19 and should be submitted on or before August 9, 2012.

[19] This is simply a securities market-specific example of the well-established principle that in certain circumstances more sales at lower margins can be more profitable than fewer sales at higher margins; this example is additional evidence that market data is an inherent part of a market's joint platform.

[20] 15 U.S.C. 78s(b)(3)(A).

[21] 17 CFR 240.19b–4(f)(2).

For the Commission, by the Division of Trading and Markets, pursuant to delegated authority.[22]

Kevin M. O'Neill,

Deputy Secretary.

[FR Doc. 2012–17552 Filed 7–18–12; 8:45 am]

BILLING CODE 8011–01–P

SECURITIES AND EXCHANGE COMMISSION

[Release No. 34–67440; File No. SR–CBOE–2012–062]

Self-Regulatory Organizations; Chicago Board Options Exchange, Incorporated; Notice of Filing and Immediate Effectiveness of a Proposed Rule Change To Amend the Fees Schedule

July 13, 2012.

Pursuant to Section 19(b)(1) of the Securities Exchange Act of 1934 (the ''Act''),[1] and Rule 19b–4 thereunder,[2] notice is hereby given that on July 2, 2012, Chicago Board Options Exchange, Incorporated (the ''Exchange'' or ''CBOE'') filed with the Securities and Exchange Commission (the ''Commission'') the proposed rule change as described in Items I, II and III below, which items have been prepared by the Exchange. The Commission is publishing this notice to solicit comments on the proposed rule change from interested persons.

I. Self-Regulatory Organization's Statement of the Terms of Substance of the Proposed Rule Change

The Exchange proposes to amend its Fees Schedule. The text of the proposed rule change is available on the Exchange's Web site (*http://www.cboe.org/legal*), at the Exchange's Office of the Secretary, and at the Commission's Public Reference Room.

II. Self-Regulatory Organization's Statement of the Purpose of, and Statutory Basis for, the Proposed Rule Change

In its filing with the Commission, the Exchange included statements concerning the purpose of and basis for the proposed rule change and discussed any comments it received on the proposed rule change. The text of these statements may be examined at the places specified in Item IV below. The Exchange has prepared summaries, set forth in sections A, B, and C below, of the most significant aspects of such statements.

A. Self-Regulatory Organization's Statement of the Purpose of, and Statutory Basis for, the Proposed Rule Change

1. Purpose

The Exchange proposes to raise from $0.25 per contract to $0.30 per contract the fee for electronic executions by voluntary professionals and professionals in equity options and index, ETF, ETN and HOLDRs options (excluding OEX, XEO, SPXW and Volatility Indexes) classes. The Exchange also proposes to raise from $0.45 per contract to $0.60 per contract the fee for electronic executions by broker-dealers in non-Penny Pilot equity options and index, ETF, ETN and HOLDRs options (excluding OEX, XEO, SPXW and Volatility Indexes) classes. Transactions executed as Qualified Contingent Cross (''QCC'') trades or transactions executed through the Exchange's Automated Improvement Mechanism (''AIM'') when the professional, voluntary professional or broker-dealer is on the Agency/Primary side are excepted from these changes.

These changes are proposed to better reflect the costs associated with supporting a larger number of option classes, option series, and overall transaction volumes that have grown over time which has caused the Exchange to continually invest in software, hardware and personnel, including increased costs for network infrastructure and regulatory systems. The Exchange also believes that increasing the broker-dealer fees for electronic executions by broker-dealers in non-Penny Pilot equity options and index, ETF, ETN and HOLDRs options (excluding OEX, XEO, SPXW and Volatility Indexes) classes will allow the Exchange to compete more effectively by covering these increased costs while still subsidizing lower customer fees. The amounts of these new fees are in line with those assessed by other exchanges. NASDAQ OMX PHLX LLC (''Phlx'') assesses to broker-dealers a fee of $0.60 per contract for electronic transactions in non-Penny Pilot options on equities, indexes, ETFs, ETNs, and HOLDRs that are multiply-listed.[3] The NASDAQ Options Market (''NOM'') assesses to professional customers a Maker fee of $0.30 per contract and a Taker fee of $0.50 per contract for electronic transactions.[4]

The proposed changes are to take effect on July 1, 2012.

2. Statutory Basis

The Exchange believes the proposed rule change is consistent with the Act and the rules and regulations thereunder applicable to the Exchange and, in particular, the requirements of Section 6(b) of the Act.[5] Specifically, the Exchange believes the proposed rule change is consistent with Section 6(b)(4) of the Act,[6] which provides that Exchange rules may provide for the equitable allocation of reasonable dues, fees, and other charges among its Trading Permit Holders and other persons using its facilities. Increasing fees for electronic executions by voluntary professionals and professionals in equity options and index, ETF, ETN and HOLDRs options (excluding OEX, XEO, SPXW and Volatility Indexes) classes is reasonable because the new proposed fee amounts are in line with comparable fees assessed by other exchanges.[7] Further, this would allow the Exchange to recoup costs associated with the growth in professional and voluntary professional trading volume while continuing to assess such fees at a rate that is lower than fees assessed to broker-dealers for similar transactions.

Increasing fees for electronic executions by professionals and voluntary professionals is equitable and not unfairly discriminatory and [sic] because of the growth in trading volume that requires the Exchange to continually invest in software and hardware (the increase in professional and voluntary professional trading volume is much greater than any increases in trading volume over the same period of time by any other type of Exchange market participant).[8] Further, professionals and voluntary professionals will still be assessed lower fees than broker-dealers for electronic executions in equity options and index, ETF, ETN and HOLDRs options (excluding OEX, XEO, SPXW and Volatility Indexes) classes[9] (broker-dealers, as Trading Permit Holders, have direct access to the Exchange's trade engine, while professionals and voluntary professionals do not). CBOE Market-Makers/DPMs/e-DPMs will be assessed lower fees of $0.20 per contract

[22] 17 CFR 200.30–3(a)(12).

[1] 15 U.S.C. 78s(b)(1).

[2] 17 CFR 240.19b–4.

[3] *See* Phlx Fee Schedule, Section II.

[4] *See* NOM Fee Schedule, Section 2(1).

[5] 15 U.S.C. 78f(b).

[6] 15 U.S.C. 78f(b).

[7] *See* NOM Fee Schedule, Section 2(1).

[8] Exchange professional and voluntary professional trading volume has increased from 49,313 contract sides in February 2009 to 3,946,055 contract sides in May 2012.

[9] *See* CBOE Fees Schedule, Section 1, which shows that broker-dealers are assessed $0.45 per contract for Penny Pilot transactions and, following the submission of this proposed rule change, $0.60 per contract for non-Penny Pilot transactions.

for electronic executions in equity options and index, ETF, ETN and HOLDRs options (excluding OEX, XEO, SPXW and Volatility Indexes) classes than similar transactions by voluntary professionals and professionals because CBOE Market-Makers/DPMs/e-DPMs have burdensome quoting obligations which professionals and voluntary professionals do not have. Customers are assessed lower fees (and in the case of equity options, no fees) [10] for electronic executions in equity options and index, ETF, ETN and HOLDRs options (excluding OEX, XEO, SPXW and Volatility Indexes) classes than similar transactions by voluntary professionals and professionals because customer order flow brings liquidity to the market, which in turn benefits all market participants. Clearing Trading Permit Holder Proprietary orders are assessed lower fees for electronic executions in equity options and index, ETF, ETN and HOLDRs options (excluding OEX, XEO, SPXW and Volatility Indexes) classes than similar transactions by voluntary professionals and professionals [11] because Clearing Trading Permit Holders have higher capital requirements, must clear trades for other market participants, must be members of the Options Clearing Corporation, and must back up the trades of the market participants that trade through them, obligations that professionals and voluntary professionals do not have.

Limiting this increase in professional and voluntary professional fees to electronic trading is equitable and not unfairly discriminatory because electronic trading by professionals and voluntary professionals (greater than 99% of all trading by professionals and voluntary professionals on CBOE is done electronically) has caused the increased investment in software and hardware, and therefore professionals and voluntary professionals who are trading electronically should bear the costs related to that increased investment.

The increased fee for electronic executions by broker-dealers in non-Penny Pilot equity options and index, ETF, ETN and HOLDRs options (excluding OEX, XEO, SPXW and Volatility Indexes) classes is reasonable because the amount is equal to that assessed by other exchanges,[12] and because such increased fees will allow the Exchange to recoup the aforementioned costs while also continuing to subsidize lower fees for customer transactions in order to compete more effectively.

The Exchange's proposal to increase the fee for electronic executions by broker-dealers in non-Penny Pilot equity options and index, ETF, ETN and HOLDRs options (excluding OEX, XEO, SPXW and Volatility Indexes) classes is equitable and not unfairly discriminatory because, currently, broker-dealers are assessed higher fees as compared to customers, professionals, voluntary professionals, CBOE Market-Makers/DPMs/e-DPMs, and Clearing Trading Permit Holders (proprietary). Customers are assessed lower fees (and in the case of equity options, no fees) for electronic executions in non-Penny Pilot equity options and index, ETF, ETN and HOLDRs options (excluding OEX, XEO, SPXW and Volatility Indexes) classes because customer order flow brings liquidity to the market, which, in turn, benefits all market participants. CBOE Market-Makers/DPMs/e-DPMs are assessed lower fees for electronic executions in non-Penny Pilot equity options and index, ETF, ETN and HOLDRs options (excluding OEX, XEO, SPXW and Volatility Indexes) classes than broker-dealers because Market-Makers/DPMs/e-DPMs have burdensome quoting obligations which broker-dealers do not have. Further, Market-Makers/DPMs/e-DPMs pay a $0.65 per contract Marketing Fee for many non-Penny Pilot transactions, which broker-dealers do not pay.[13] This increased fee for non-Penny Pilot broker-dealer transactions brings broker-dealer fees for such transactions into a closer alignment with the fees paid by Market-Makers/DPMs/e-DPMs.

Professionals and voluntary professionals are assessed lower fees for electronic executions in non-Penny Pilot equity options and index, ETF, ETN and HOLDRs options (excluding OEX, XEO, SPXW and Volatility Indexes) classes than broker-dealers because broker-dealers, as Trading Permit Holders, have direct access to the Exchange's trade engine, while professionals and voluntary professionals do not. Clearing Trading Permit Holder proprietary orders are assessed lower fees for electronic executions in non-Penny Pilot equity options and index, ETF, ETN and HOLDRs options (excluding OEX, XEO, SPXW and Volatility Indexes) classes than broker-dealer orders because Clearing Trading Permit Holders have higher capital requirements, must clear trades for other market participants, must be members of the Options Clearing Corporation, and must back up the trades of the market participants that trade through them, obligations that broker-dealers do not have.

Assessing higher fees for broker-dealer transactions in electronic, non-Penny Pilot classes is equitable and not unfairly discriminatory because in non-Penny Pilot classes the spreads are naturally larger than in Penny Pilot classes, and these wider spreads allow for greater profit potential. Limiting this fee increase to electronic transactions is equitable and not unfairly discriminatory because electronic trading requires constant system development and maintenance.

Finally, the Exchange believes that increasing the fee for electronic executions by broker-dealers in non-Penny Pilot equity options and index, ETF, ETN and HOLDRs options (excluding OEX, XEO, SPXW and Volatility Indexes) classes is equitable and not unfairly discriminatory because this will allow the Exchange to compete more effectively by covering the increased costs for software, hardware and personnel, including increased costs for network infrastructure and regulatory systems, while still subsidizing lower customer fees, thereby attracting customer order flow, which benefits all market participants.

B. Self-Regulatory Organization's Statement on Burden on Competition

CBOE does not believe that the proposed rule change will impose any burden on competition that is not necessary or appropriate in furtherance of the purposes of the Act.

C. Self-Regulatory Organization's Statement on Comments on the Proposed Rule Change Received From Members, Participants, or Others

The Exchange neither solicited nor received comments on the proposed rule change.

III. Date of Effectiveness of the Proposed Rule Change and Timing for Commission Action

The foregoing rule change has become effective pursuant to Section 19(b)(3)(A) [14] of the Act and paragraph (f) of Rule 19b–4 [15] thereunder. At any time within 60 days of the filing of the proposed rule change, the Commission summarily may temporarily suspend such rule change if it appears to the Commission that such action is necessary or appropriate in the public interest, for the protection of investors,

[10] *See* CBOE Fees Schedule, Section 1.

[11] *See* CBOE Fees Schedule, Section 1.

[12] *See* Note 1.

[13] *See* CBOE Fees Schedule, Section 2.

[14] 15 U.S.C. 78s(b)(3)(A).

[15] 17 CFR 240.19b–4(f).

or otherwise in furtherance of the purposes of the Act.

IV. Solicitation of Comments

Interested persons are invited to submit written data, views, and arguments concerning the foregoing, including whether the proposed rule change is consistent with the Act. Comments may be submitted by any of the following methods:

Electronic Comments

- Use the Commission's Internet comment form (*http://www.sec.gov/rules/sro.shtml*); or
- Send an email to *rule-comments@sec.gov*. Please include File Number SR–CBOE–2012–062 on the subject line.

Paper Comments

- Send paper comments in triplicate to Elizabeth M. Murphy, Secretary, Securities and Exchange Commission, 100 F Street NE., Washington, DC 20549–1090.

All submissions should refer to File Number SR–CBOE–2012–062. This file number should be included on the subject line if email is used. To help the Commission process and review your comments more efficiently, please use only one method. The Commission will post all comments on the Commission's Internet Web site (*http://www.sec.gov/rules/sro.shtml*). Copies of the submission, all subsequent amendments, all written statements with respect to the proposed rule change that are filed with the Commission, and all written communications relating to the proposed rule change between the Commission and any person, other than those that may be withheld from the public in accordance with the provisions of 5 U.S.C. 552, will be available for Web site viewing and printing in the Commission's Public Reference Room, 100 F Street NE., Washington, DC 20549, on official business days between the hours of 10:00 a.m. and 3:00 p.m. Copies of the filing also will be available for inspection and copying at the principal office of the Exchange. All comments received will be posted without change; the Commission does not edit personal identifying information from submissions. You should submit only information that you wish to make available publicly. All submissions should refer to File Number SR–CBOE–2012–062 and should be submitted on or before August 9, 2012.

For the Commission, by the Division of Trading and Markets, pursuant to delegated authority.[16]

Kevin M. O'Neill,

Deputy Secretary.

[FR Doc. 2012–17574 Filed 7–18–12; 8:45 am]

BILLING CODE 8011–01–P

[16] 17 CFR 200.30–3(a)(12).

SECURITIES AND EXCHANGE COMMISSION

[Release No. 34–67439; File No. SR–Phlx–2012–90]

Self-Regulatory Organizations; NASDAQ OMX PHLX LLC; Notice of Filing and Immediate Effectiveness of Proposed Rule Change Relating to Pricing in Select Symbols and Multiply-Listed Options

July 13, 2012.

Pursuant to Section 19(b)(1) of the Securities Exchange Act of 1934 (''Act''),[1] and Rule 19b–4 [2] thereunder, notice is hereby given that, on July 2, 2012, NASDAQ OMX PHLX LLC (''Phlx'' or ''Exchange'') filed with the Securities and Exchange Commission (''SEC'' or ''Commission'') the proposed rule change as described in Items I, II and III below, which Items have been prepared by the Exchange. The Commission is publishing this notice to solicit comments on the proposed rule change from interested persons.

I. Self-Regulatory Organization's Statement of the Terms of Substance of the Proposed Rule Change

The Exchange proposes to amend the Select Symbols [3] and fees in Section I and amend a fee and adopt a Customer Rebate Program in Section II of the Pricing Schedule. The Exchange also proposes to make a minor amendment to Section I.

The text of the proposed rule change is available on the Exchange's Web site at *http://www.nasdaqtrader.com/micro.aspx?id=PHLXfilings,* at the principal office of the Exchange, and at the Commission's Public Reference Room.

II. Self-Regulatory Organization's Statement of the Purpose of, and Statutory Basis for, the Proposed Rule Change

In its filing with the Commission, the Exchange included statements concerning the purpose of and basis for the proposed rule change and discussed any comments it received on the proposed rule change. The text of these statements may be examined at the places specified in Item IV below. The Exchange has prepared summaries, set forth in sections A, B, and C below, of the most significant aspects of such statements.

A. Self-Regulatory Organization's Statement of the Purpose of, and Statutory Basis for, the Proposed Rule Change

1. Purpose

The Exchange proposes to make various amendments to Section I of the Pricing Schedule entitled ''Fees and Rebates for Adding and Removing Liquidity in Select Symbols.'' The Exchange proposes to delete the following Select Symbols from the list of symbols subject to the fees and rebates in Section I: Barrick Gold Corporation (''ABX''), eBay Inc. (''EBAY''), Corning Inc. (''GLW''), Procter & Gamble Co. (''PG''), Potash Corp. of Saskatchewan, Inc. (''POT''), Starbucks Corporation (''SBUX''), SanDisk Corp. (''SNDK'') and United Continental Holdings, Inc. (''UAL'') (collectively ''Proposed Deleted Symbols''). These Proposed Deleted Symbols would be subject to the rebates and fees in Section II of the Pricing Schedule entitled ''Multiply Listed Options Fees.'' [4]

The Exchange proposes to amend the title of Section I, Part A from ''Single contra-side'' to ''Simple Order.'' The Exchange believes this amendment better describes the type of orders subject to the fees and rebates in Section I, Part A of the Pricing Schedule. The Exchange also proposes to increase the Specialist [5] and Market Maker [6] Fees for Removing Liquidity in Section I, Part A from $0.38 per contract to $0.39 per contract. The Exchange believes that the increased fees better align the Fees for Removing Liquidity by assessing Customers the same fee as a Specialist and Market Maker.

The Exchange proposes to amend the Electronic Firm Fee Discount which

[1] 15 U.S.C. 78s(b)(1).

[2] 17 CFR 240.19b–4.

[3] The Select Symbols are subject to the fees and rebates in Section I of the Pricing Schedule. *See* Section I for a complete list of Select Symbols.

[4] Section II includes options overlying equities, ETFs, ETNs, indexes and HOLDRs which are Multiply Listed.

[5] A Specialist is an Exchange member who is registered as an options specialist pursuant to Rule 1020(a). An options Specialist includes a Remote Specialist which is a defined as an options specialist in one or more classes that does not have a physical presence on an Exchange floor and is approved by the Exchange pursuant to Rule 501.

[6] For purposes of the Pricing Schedule, the term ''Market Maker'' is utilized to describe fees and rebates applicable to ROTs, SQTs and RSQTs. The term ''ROT, SQT and RSQT'' applies to transactions for the accounts of Registered Option Traders (''ROTs''), Streaming Quote Traders (''SQTs''), and Remote Streaming Quote Traders (''RSQTs'').

today provides that Firm electronic Options Transaction Charges in Penny Pilot[7] and non-Penny Pilot Options will be reduced to $0.11 per contract for a given month provided the Firm has volume greater than 750,000 electronically-delivered contracts in a month. The Exchange proposes to reduce the amount of the discount by increasing the Options Transaction Charge to $0.13 per contract from $0.11 per contract. While the Exchange desires to continue to incentivize Firms to increase the volume executed on Phlx, the Exchange believes that reducing the Options Transactions Charges to $0.13 per contract is still a significant incentive for Firms.

The Exchange also proposes to cap the Qualified Contingent Cross Rebate (''QCC Rebate'') to be paid in a given month at $275,000. The QCC Rebate is applicable to both electronic QCC Orders (''eQCC'')[8] and Floor QCC Orders,[9] except where the transaction is either: (i) Customer-to-Customer; or (ii) a dividend,[10] merger[11] or short stock interest strategy[12] and executions subject to the Reversal and Conversion Cap[13] (as defined in Section II). QCC Transaction Fees apply to Sections I and II of the Pricing Schedule and are subject to the Monthly Firm Fee Cap[14] and the Monthly Market Maker Cap.[15] The Exchange believes that the proposed cap, while limiting the amount of rebate a market participant may obtain in extremely high industry volume months, will not hinder participants in continuing to execute QCC Orders to obtain the highest possible rebate.

The Exchange proposes to eliminate the $0.07 per contract rebate for members executing electronically-delivered Customer Orders when that member transacts an average daily volume of 50,000 Customer contracts or greater in a given month. Also, the additional rebate of $0.03 per contract, which is paid to members for electronically-delivered Customer orders that qualified for the $0.07 rebate and added liquidity in a Simple Order in a non-Penny Pilot Option or added or removed liquidity (including auctions) in a Complex Order in a Penny Pilot Option, would be eliminated.[16] The Exchange proposes to instead offer a more detailed Customer Rebate Program as described below, which will replace the rebates that are being eliminated.

The Exchange proposes to adopt a revised rebate program entitled ''Customer Rebate Program'' for Multiply Listed Options,[17] which has some similarities to the rebates that are being eliminated in Section II of the Pricing Schedule. The proposed Customer Rebate Program will consist of three tiers. The first tier (''Tier 1'') (0 to 49,999 contracts in a month) will not earn any rebates. This is the case today. The second tier (''Tier 2'') (50,000 to 99,999 contracts in a month) will remain the same as the current rebate offered today that is being eliminated.[18] The third tier (''Tier 3'') (over 100,000 contracts in a month) will introduce higher rebates as an additional incentive for member organizations to route Customer order flow to the Exchange for execution, with the exception of Category C, which will remain the same as it is today ($0.10 per contract).

Each tier or ''Threshold'' would be calculated by totaling all applicable Multiply-Listed electronically-delivered Customer Orders, except electronic Qualified Contingent Cross Orders (eQCC Orders). PIXL orders are currently excluded from the Threshold computations for the rebates that exist today and are being eliminated; this differs for the Customer Rebate Program. The rebates would be paid for all

[7] The Penny Pilot was established in January 2007 and in October 2009 was expanded and extended through December 31, 2010. *See* Securities Exchange Act Release Nos. 55153 (January 23, 2007), 72 FR 4553 (January 31, 2007)(SR–Phlx–2006–74)(notice of filing and approval order establishing Penny Pilot); 60873 (October 23, 2009), 74 FR 56675 (November 2, 2009)(SR–Phlx–2009–91)(notice of filing and immediate effectiveness expanding and extending Penny Pilot); 60966 (November 9, 2009), 74 FR 59331 (November 17, 2009)(SR–Phlx–2009–94)(notice of filing and immediate effectiveness adding seventy-five classes to Penny Pilot); 61454 (February 1, 2010), 75 FR 6233 (February 8, 2010)(SR–Phlx–2010–12)(notice of filing and immediate effectiveness adding seventy-five classes to Penny Pilot); 62028 (May 4, 2010), 75 FR 25890 (May 10, 2010)(SR–Phlx–2010–65)(notice of filing and immediate effectiveness adding seventy-five classes to Penny Pilot); 62616 (July 30, 2010), 75 FR 47664 (August 6, 2010)(SR–Phlx–2010–103)(notice of filing and immediate effectiveness adding seventy-five classes to Penny Pilot); 63395 (November 30, 2010), 75 FR 76062 (December 7, 2010)(SR–Phlx–2010–167)(notice of filing and immediate effectiveness extending the Penny Pilot); 65976 (December 15, 2011), 76 FR 79247 (December 21, 2011)(SR–Phlx–2011–172)(notice of filing and immediate effectiveness extending the Penny Pilot); and (SR–Phlx–2012–86) (notice of filing and immediate effectiveness extending the Penny Pilot). *See also* Exchange Rule 1034.

[8] A QCC Order is comprised of an order to buy or sell at least 1000 contracts that is identified as being part of a qualified contingent trade, as that term is defined in Rule 1080(o)(3), coupled with a contra-side order to buy or sell an equal number of contracts. The QCC Order must be executed at a price at or between the National Best Bid and Offer (''NBBO'') and be rejected if a Customer order is resting on the Exchange book at the same price. A QCC Order shall only be submitted electronically from off the floor to the PHLX XL II System. *See* Rule 1080(o). *See also* Securities Exchange Act Release No. 64249 (April 7, 2011), 76 FR 20773 (April 13, 2011) (SR–Phlx–2011–47) (a rule change to establish a QCC Order to facilitate the execution of stock/option Qualified Contingent Trades (''QCTs'') that satisfy the requirements of the trade through exemption in connection with Rule 611(d) of the Regulation NMS).

[9] A Floor QCC Order must: (i) be for at least 1,000 contracts, (ii) meet the six requirements of Rule 1080(o)(3) which are modeled on the QCT Exemption, (iii) be executed at a price at or between the NBBO; and (iv) be rejected if a Customer order is resting on the Exchange book at the same price. In order to satisfy the 1,000-contract requirement, a Floor QCC Order must be for 1,000 contracts and could not be, for example, two 500-contract orders or two 500-contract legs. *See* Rule 1064(e). *See also* Securities Exchange Act Release No. 64688 (June 16, 2011), 76 FR 36606 (June 22, 2011) (SR–Phlx–2011–56).

[10] A dividend strategy is defined as transactions done to achieve a dividend arbitrage involving the purchase, sale and exercise of in-the-money options of the same class, executed the first business day prior to the date on which the underlying stock goes ex-dividend. *See* Section II of the Pricing Schedule.

[11] A merger strategy is defined as transactions done to achieve a merger arbitrage involving the purchase, sale and exercise of options of the same class and expiration date, executed the first business day prior to the date on which shareholders of record are required to elect their respective form of consideration, i.e., cash or stock. *See* Section II of the Pricing Schedule.

[12] A short stock interest strategy is defined as transactions done to achieve a short stock interest arbitrage involving the purchase, sale and exercise of in-the-money options of the same class. *See* Section II of the Pricing Schedule.

[13] Specialist, Market Maker, Professional, Firm and Broker-Dealer options transaction fees in Multiply Listed Options are capped at $500 per day for reversal and conversion strategies executed on the same trading day in the same options class when such members are trading in their own proprietary accounts.

[14] Firms are subject to a maximum fee of $75,000 (''Monthly Firm Fee Cap''). Firm non-electronic equity option transaction fees and QCC Transaction Fees in the aggregate, for one billing month, may not exceed the Monthly Firm Fee Cap per member organization when such members are trading in their own proprietary account. All dividend, merger, short stock interest and reversal and conversion strategy executions are excluded from the Monthly Firm Fee Cap. The Firm equity options transaction fees are waived for members executing facilitation orders pursuant to Exchange Rule 1064 when such members are trading in their own proprietary account.

[15] Specialists and Market Makers are currently subject to a Monthly Market Maker Cap of $550,000 for equity option transaction fees and QCC Transaction Fees. The trading activity of separate Specialist and Market Maker member organizations will be aggregated in calculating the Monthly Market Maker Cap if there is at least 75% common ownership between the member organizations.

[16] PIXL Orders and QCC Orders are not eligible for the rebate and are excluded from the calculation of the average daily volume.

[17] This includes options overlying equities, ETFs, ETNs, indexes and HOLDRS which are Multiply Listed and excludes SOX, HGX and OSX and the Select Symbols.

[18] The Exchange currently offers a rebate of $0.07 per contract, which is paid to members executing electronically-delivered Customer Orders when the member transacts an average daily volume of 50,000 Customer contracts or greater in a given month. Further, an additional rebate of $0.03 per contract is paid to members for those electronically-delivered Customer orders that: qualified for the $0.07 rebate; and added liquidity in a Simple Order in a non-Penny Pilot Option or added or removed liquidity (including auctions) in a Complex Order in a Penny Pilot Option. This rebate scheme is being eliminated and replaced with the Customer Rebate Program.

electronically delivered Customer orders in a given month as follows:

Average daily volume threshold	Rebate per contract categories		
	Category A	Category B	Category C
0 to 49,999 contracts in a month	$0.00	$0.00	$0.00
50,000 to 99,999 contracts in a month	0.07	0.10	0.10
Over 100,000 contracts in a month	0.09	0.12	0.10

Category A rebates would be paid to members executing electronically-delivered Customer Simple Orders in Penny Pilot Options, Simple Orders in Non-Penny Pilot Options that removed liquidity and Complex Orders in Non-Penny Pilot Options. Category B rebates would be paid to members executing electronically-delivered Customer Complex Orders in Penny Pilot Options and Category C rebates would be paid to members executing electronically-delivered Customer Simple Orders in Non-Penny Pilot Options that added liquidity. The Threshold would be calculated by totaling Customer volume in Multiply Listed Options that are electronically-delivered, except electronic QCC Orders (eQCC Orders) as defined in Exchange Rule 1080(o) (''Threshold Volume''). Rebates will be paid on Threshold Volume in a given month, excluding electronically-delivered Customer volume associated with PIXL.[19] The Exchange believes that this proposed Customer Rebate Program will attract additional Customer order flow to the Exchange for the benefit of all market participants through increased liquidity.

Finally, the Exchange is proposing to increase the current fee applicable to Specialists and Market Makers that are on the contra-side of an electronically-delivered and executed Customer order and have reached the Monthly Market Maker Cap. Today, the Exchange assesses Specialists and Market Makers a $0.07 per contract fee, in both Select Symbols and Multiply Listed Symbols (Sections I and II) when contra to an electronically-delivered and executed Customer order and when the Monthly Market Maker Cap is exceeded. PIXL Orders are excluded today. This would remain the same except the Exchange proposes to increase this fee from $0.07 to $0.12 per contract to assist in recouping costs associated with providing a Customer Rebate Program. The Exchange believes that this fee increase would enable the Exchange to offer the Customer Rebate Program as proposed.

2. Statutory Basis

The Exchange believes that its proposal to amend its Pricing Schedule is consistent with Section 6(b) of the Act[20] in general, and furthers the objectives of Section 6(b)(4) of the Act[21] in particular, in that it is an equitable allocation of reasonable fees and other charges among Exchange members and other persons using its facilities.

Select Symbols

The Exchange believes that it is reasonable to remove the Proposed Deleted Symbols from its list of Select Symbols to attract additional order flow to the Exchange. The Exchange believes that applying the fees in Section II of the Pricing Schedule to the Proposed Deleted Symbols, including the opportunity to receive payment for order flow, will continue to attract order flow to the Exchange.

The Exchange believes that it is equitable and not unfairly discriminatory to amend its list of Select Symbols to remove the Proposed Deleted Symbols because the list of Select Symbols would apply uniformly to all categories of participants in the same manner. All market participants who trade the Select Symbols would be subject to the rebates and fees in Section I of the Pricing Schedule, which would not include the Proposed Deleted Symbols. Also, all market participants would be uniformly subject to the fees and Customer Rebate Program in Section II, which would include the Proposed Deleted Symbols.

Section I—Fee Amendments

The Exchange believes its proposal to amend the Specialist and Market Maker Fees for Removing Liquidity in Section I, Part A from $0.38 per contract to $0.39 per contract is reasonable, equitable and not unfairly discriminatory because the Exchange would assess Specialists and Market Makers the same Fee for Removing Liquidity as a Customer. The Exchange notes that Specialists and Market Makers are assessed lower Options Transaction Charges as compared to other market participants, except Customers, because they have burdensome quoting obligations[22] to the market which do not apply to Customers, Professionals, Firms and Broker-Dealers. The proposed differentiation as between Customers, Specialists and Market Makers as compared to Professionals, Firms and Broker-Dealers recognizes the differing contributions made to the liquidity and trading environment on the Exchange by these market participants. The Exchange believes that the increased fees better align the Fees for Removing Liquidity by assessing Customers the same fee as a Specialist and Market Maker.

Section II—Electronic Firm Fee Discount

The Exchange's proposal to increase the fee thereby decrease the Electronic Firm Fee Discount for both electronic Penny Pilot and non-Penny Pilot Options from $0.11 per contract to $0.13 per contract is reasonable because the amendment would enable the Exchange to reward market participants that directed Customer orders to the Exchange by paying rebates as proposed herein, which in turn benefits all market participants.

The Exchange believes decreasing the Electronic Firm Fee Discount for both electronic Penny Pilot and non-Penny Pilot Options from $0.11 per contract to $0.13 per contract is equitable and not unfairly discriminatory because the Exchange is continuing to incentivize Firms by providing the ability to significantly lower fees and also earn rebates in the Customer Rebate Program. All Firms will continue to have an opportunity to qualify for a lower fee provided they achieve the requisite volume. The Exchange believes this Electronic Firm Fee Discount will continue to act as an incentive to attract electronic Firm volume to the Exchange.

QCC Rebate

The Exchange believes that its proposal to cap the QCC Rebate at

[19] PIXL is the Exchange's price improvement mechanism known as Price Improvement XL or (PIXL SM).

[20] 15 U.S.C. 78f(b).

[21] 15 U.S.C. 78f(b)(4).

[22] *See* Rule 1014 titled ''Obligations and Restrictions Applicable to Specialists and Registered Options Traders.''

$275,000 per month is reasonable because the Exchange is proposing to provide other incentives in Section II to attract volume. Also, this cap, while limiting the amount of rebate that a market participant would receive for transacting a certain amount of QCC volume, will continue to incentivize market participants to seek to obtain the highest rebate possible. The Exchange believes that its proposal to cap the QCC Rebate at $275,000 per month is equitable and not unfairly discriminatory because all market participants would be uniformly capped at $275,000 per month.

Elimination of Rebate

The Exchange's proposal to eliminate the $0.07 per contract rebate for members executing electronically-delivered Customer Orders when that member transacts an average daily volume of 50,000 Customer contracts or greater in a given month and the additional rebate of $0.03 per contract for electronically-delivered Customer orders that qualified for the $0.07 rebate are reasonable because the elimination of these rebates will enable the Exchange to reward market participants that add liquidity to the Exchange with the proposed Customer Rebate Program and in turn benefit all market participants. The elimination of the two-tiered rebate is equitable and not unfairly discriminatory because it would be uniformly eliminated and unavailable to all market participants. In addition, the Customer Rebate Program would be available to these market participants.

Customer Rebate

The Exchange's adoption of a Customer Rebate Program in Section II of the Pricing Schedule is reasonable because the Exchange is seeking to incentivize members to route Multiply-Listed electronically-delivered Customer orders to the Exchange, with the exception of electronic QCC Orders. The Exchange believes that the proposed Volume Thresholds are reasonable because the Exchange believes that the thresholds are attainable to members desiring to increase their volume to achieve certain rebates and also bring greater Customer liquidity to the Exchange. By incentivizing members to route Customer orders, the Exchange desires to attract Customer orders which benefits all market participants by increasing liquidity on the Exchange. Other exchanges employ incentive programs.[23] The Exchange believes that its proposed volume thresholds and rates will be competitive as compared to rebate structures at other exchanges and attract order flow to the Exchange.

The Exchange also believes that it is reasonable to base rebates not only on volume but on the type of order by creating three categories, A, B and C, which specify the type of order that is eligible for certain rebates within each volume tier or Threshold. The Exchange is not only seeking to incentivize volume in Multiply-Listed Options but also seeks to incentivize market participants to transact certain types of Simple and Complex Orders in both Penny Pilot and non-Penny Pilot Options. The Exchange believes that the proposed calculation of the Volume Threshold, totaling all Multiply-Listed electronically delivered Customer volume, is reasonable because the Exchange believes that too will incentivize members to route Multiply-Listed electronically-delivered Customer orders to the Exchange, with the exception of electronic QCC Orders (eQCC Orders). The Exchange believes that its proposal to exclude electronic QCC Orders (eQCC Orders) from the Threshold calculation is reasonable because QCC has its own rebate schedule. Finally, the Exchange believes that excluding PIXL from the rebates is reasonable because the Exchange is not seeking to incentivize members to transact PIXL Orders. Also, today PIXL Orders and QCC Orders are not eligible for the rebate and are excluded from the calculation of the average daily volume. The Exchange assesses PIXL Orders its own fees as set forth in Section IV, Part A of the Pricing Schedule. Certain rebates are available for PIXL Orders as noted in that section of the Pricing Schedule.

The Exchange also believes the proposed Customer Rebate Program is equitable and not unfairly discriminatory because all market participants are eligible to receive a rebate provided they meet both the volume and order type requirements. The Exchange believes that incentivizing members to direct Customer order flow to the Exchange will provide all market participants an opportunity to interact with that order flow. Also, the Exchange believes it is equitable and not unfairly discriminatory to base rebates not only on volume but on the type of orders because the Exchange would uniformly apply the rebates to all market participants by order type. The Exchange currently offers no rebate for Tier 1 (between 0 and 49,999 contracts in a month). The Exchange currently offers a rebate of $0.07 per contract to members that execute electronically-delivered Customer orders (Simple or Complex) when transacting an average daily volume of 50,000 contracts.[24] This is similar to the Category A rebate in Tier 2 (50,000 to 99,999 contracts in a month) of $0.07 per contract. Further, Categories B[25] and C[26] in Tier 2 would receive a $0.10 per contract rebate similar to today. The Exchange currently pays an additional rebate of $0.03 per contract to members for electronically-delivered Customer orders that qualified for the $0.07 rebate and added liquidity in a Simple Order in a non-Penny Pilot or added or removed liquidity in a Complex Order in a Penny Pilot Option for a total rebate of $0.10 per contract. With respect to Tier 3 (over 100,000 contracts in a month), the Exchange would pay an increased rebate of $0.09 per contract to members that qualify for Category A (today those members receive a $0.07 per contract rebate). Members that qualify for Category B would receive an increased rebate of $0.12 per contract (today those members receive a $0.10 per contract rebate). Members that qualify for Category C would receive the same $0.10 per contract rebate as today. In assessing the threshold categories and rates for rebates, the Exchange proposed rebates that it believes are competitive in light of other rebate structures offered today at other options exchanges.

The Exchange believes that the proposed calculation of the Volume Threshold, totaling all Multiply-Listed electronically delivered Customer volume, is equitable and not unfairly discriminatory because the calculation of the Volume Threshold would be uniformly applied to all market

[23] *See* the Chicago Board Options Exchange, Incorporated's (''CBOE'') Fees Schedule. CBOE offers each Trading Permit Holder (''TPH'') a credit for each public customer order transmitted by the TPH which is executed electronically in all multiply-listed option classes, excluding QCC trades and executions related to contracts that are routed to one or more exchanges in connection with the Options Order Protection and Locked/Crossed Market Plan, provided the TPH meets certain volume thresholds in a month (Volume Incentive Program).

[24] The Exchange is proposing to pay a $0.07 rebate to members that qualify for a Category A, Tier 2 rebate for electronically-delivered Customer Simple Orders in Penny Pilot Options, Simple Orders in Non-Penny Pilot Options that remove liquidity and Complex Orders in Non-Penny Pilot Options.

[25] A Category B rebate will be paid to members executing electronically-delivered Customer Complex Orders in Penny Pilot Options.

[26] A Category C rebate will be paid to members executing electronically-delivered Customer Simple Orders in Non-Penny Pilot Options that add liquidity.

participants. The Exchange believes that its proposal to exclude electronic QCC Orders (eQCC Orders) from the Threshold calculation is equitable and not unfairly discriminatory because no rebate would be paid on QCC Orders as a result of their exclusion from this section, but this would not impact the ability to obtain a rebate for QCC Orders as per the QCC Rebate schedule. Finally, the Exchange believes that excluding PIXL Orders from the rebates is equitable and not unfairly discriminatory because the Exchange would uniformly allow market participants to count PIXL Orders in the Volume Threshold but would uniformly not pay rebates on those orders.

The Exchange also believes it is reasonable, equitable and not unfairly discriminatory to only offer rebates for Customer orders and not to other market participants. Customer order flow brings unique benefits to the marketplace in terms of liquidity and order interaction. It is an important Exchange function to provide an opportunity to all market participants to trade against Customer orders.

Section II Monthly Market Cap

The Exchange's proposal to increase the current fee applicable to Specialists and Market Makers that are on the contra-side of an electronically-delivered and executed Customer order and have reached the Monthly Market Maker Cap from $0.07 to $0.12 per contract is reasonable because it would enable the Exchange to offer the proposed Customer Rebate Program to market participants that direct Customer orders to the Exchange and in turn benefits all market participants.

The proposed increase to the current fee applicable to Specialists and Market Makers that are on the contra-side of an electronically-delivered and executed Customer order and have reached the Monthly Market Maker Cap from $0.07 to $0.12 per contract is equitable and not unfairly discriminatory because this fee would be uniformly applied to all Specialists and Market Makers that qualified for the Cap and are on the contra-side of an electronically-delivered and executed Customer order. The Exchange recently amended the Monthly Firm Fee Cap to only apply to non-electronic equity options transaction fees. A Specialist or Market Maker is able to qualify for the Monthly Market Maker Cap without such a limitation as is currently applied to the Monthly Firm Fee Cap. There is no corresponding fee for the Monthly Firm Fee Cap because fees from electronically-delivered and executed volume are not included in the Monthly Firm Fee Cap and therefore the Exchange does not need to implement a similar fee to cover the cost of offering rebates for electronically-delivered and executed Customer volume.

Miscellaneous

The Exchange's proposal to amend the title of Part A from ''Single contra-side'' to ''Simple Order'' is reasonable, equitable and not unfairly discriminatory because the Exchange believes the caption ''Simple Orders'' more accurately describes the types of orders subject to the fees and rebates in Section I, Part A of the Pricing Schedule. This amendment is merely technical in nature and does not impact pricing.

The Exchange operates in a highly competitive market, comprised of ten exchanges, in which market participants can easily and readily direct order flow to competing venues if they deem fee and rebate levels at a particular venue to be excessive. Accordingly, the fees that are assessed and the rebates paid by the Exchange must remain competitive with fees charged and rebates paid by other venues and therefore must continue to be reasonable and equitably allocated to those members that opt to direct orders to the Exchange rather than competing venues.

B. Self-Regulatory Organization's Statement on Burden on Competition

The Exchange does not believe that the proposed rule change will impose any burden on competition not necessary or appropriate in furtherance of the purposes of the Act. To the contrary, the Exchange believes that incentivizing members with a Customer Rebate Program and increasing other fees to allow the Exchange to offer competitive rebates will attract Customer liquidity to the Exchange and benefit all market participants.

C. Self-Regulatory Organization's Statement on Comments on the Proposed Rule Change Received From Members, Participants, or Others

No written comments were either solicited or received.

III. Date of Effectiveness of the Proposed Rule Change and Timing for Commission Action

The foregoing rule change has become effective pursuant to Section 19(b)(3)(A)(ii) of the Act.[27] At any time within 60 days of the filing of the proposed rule change, the Commission summarily may temporarily suspend such rule change if it appears to the Commission that such action is necessary or appropriate in the public interest, for the protection of investors, or otherwise in furtherance of the purposes of the Act. If the Commission takes such action, the Commission shall institute proceedings to determine whether the proposed rule should be approved or disapproved.

[27] 15 U.S.C. 78s(b)(3)(A)(ii).

IV. Solicitation of Comments

Interested persons are invited to submit written data, views, and arguments concerning the foregoing, including whether the proposed rule change is consistent with the Act. Comments may be submitted by any of the following methods:

Electronic Comments:

- Use the Commission's Internet comment form (*http://www.sec.gov/rules/sro.shtml*); or
- Send an email to *rule-comments@sec.gov.* Please include File Number SR–Phlx–2012–90 on the subject line.

Paper Comments

- Send paper comments in triplicate to Elizabeth M. Murphy, Secretary, Securities and Exchange Commission, 100 F Street NE., Washington, DC 20549–1090.

All submissions should refer to File Number SR–Phlx-2012–90. This file number should be included on the subject line if email is used. To help the Commission process and review your comments more efficiently, please use only one method. The Commission will post all comments on the Commission's Internet Web site (*http://www.sec.gov/rules/sro.shtml*). Copies of the submission, all subsequent amendments, all written statements with respect to the proposed rule change that are filed with the Commission, and all written communications relating to the proposed rule change between the Commission and any person, other than those that may be withheld from the public in accordance with the provisions of 5 U.S.C. 552, will be available for Web site viewing and printing in the Commission's Public Reference Room, 100 F Street NE., Washington, DC 20549, on official business days between the hours of 10:00 a.m. and 3:00 p.m. Copies of the filing also will be available for inspection and copying at the principal office of the Exchange. All comments received will be posted without change; the Commission does not edit personal identifying information from submissions. You should submit only information that you wish to make

available publicly. All submissions should refer to File Number SR–Phlx–2012–90 and should be submitted on or before August 9, 2012.

For the Commission, by the Division of Trading and Markets, pursuant to delegated authority.[28]

Kevin M. O'Neill,

Deputy Secretary.

[FR Doc. 2012–17573 Filed 7–18–12; 8:45 am]

BILLING CODE 8011–01–P

[28] 17 CFR 200.30–3(a)(12).

SMALL BUSINESS ADMINISTRATION

[Disaster Declaration #13103 and #13104]

Florida Disaster Number FL–00071

AGENCY: U.S. Small Business Administration.

ACTION: Amendment 1.

SUMMARY: This is an amendment of the Presidential declaration of a major disaster for the State of Florida (FEMA–4068–DR), dated 07/03/2012.

Incident: Tropical Storm Debby.

Incident Period: 06/23/2012 and continuing.

Effective Date: 07/04/2012.

Physical Loan Application Deadline Date: 09/04/2012.

EIDL Loan Application Deadline Date: 04/03/2013.

ADDRESSES: Submit completed loan applications to: U.S. Small Business Administration, Processing and Disbursement Center, 14925 Kingsport Road, Fort Worth, TX 76155.

FOR FURTHER INFORMATION CONTACT: A. Escobar, Office of Disaster Assistance, U.S. Small Business Administration, 409 3rd Street SW., Suite 6050, Washington, DC 20416.

SUPPLEMENTARY INFORMATION: The notice of the Presidential disaster declaration for the State of Florida, dated 07/03/2012 is hereby amended to include the following areas as adversely affected by the disaster:

Primary Counties: (Physical Damage and Economic Injury Loans):

Clay; Franklin; Hernando; Highlands; Pinellas; Suwannee.

Contiguous Counties: (Economic Injury Loans Only):

Florida: Charlotte; Citrus; Desoto; Glades; Gulf; Hardee; Lafayette; Madison; Okeechobee; Osceola; Saint Johns.

All other information in the original declaration remains unchanged.

(Catalog of Federal Domestic Assistance Numbers 59002 and 59008)

Joseph P. Loddo,

Acting Associate Administrator for Disaster Assistance.

[FR Doc. 2012–17243 Filed 7–18–12; 8:45 am]

BILLING CODE 8025–01–M

DEPARTMENT OF STATE

[Public Notice 7957]

In the Matter of the Designation of Ahmed Abdulrahman Sihab Ahmed Sihab as a Specially Designated Global Terrorist Pursuant to Section 1(b) of Executive Order 13224, as Amended

Acting under the authority of and in accordance with section 1(b) of Executive Order 13224 of September 23, 2001, as amended by Executive Order 13268 of July 2, 2002, and Executive Order 13284 of January 23, 2003, I hereby determine that the individual known as Ahmed Abdulrahman Sihab Ahmed Sihab, committed, or poses a significant risk of committing, acts of terrorism that threaten the security of U.S. nationals or the national security, foreign policy, or economy of the United States.

Consistent with the determination in Section 10 of Executive Order 13224 that ''prior notice to persons determined to be subject to the Order who might have a constitutional presence in the United States would render ineffectual the blocking and other measures authorized in the Order because of the ability to transfer funds instantaneously,'' I determine that no prior notice needs to be provided to any person subject to this determination who might have a constitutional presence in the United States, because to do so would render ineffectual the measures authorized in the Order.

This notice shall be published in the **Federal Register**.

Dated: April 18, 2012.

William J. Burns,

Deputy Secretary of State.

[FR Doc. 2012–17639 Filed 7–18–12; 8:45 am]

BILLING CODE 4710–10–P

DEPARTMENT OF TRANSPORTATION

Office of the Secretary

Notice of Funding Availability for the Small Business Transportation Resource Center Program

AGENCY: Department of Transportation (DOT), Office of the Secretary of Transportation (OST), Office of Small and Disadvantaged Business Utilization (OSDBU).

ACTION: Notice of Funding Availability; Extension of closing and award dates.

SUMMARY: This action extends the closing and award dates for a Notice of Funding Availability for the Small Business Transportation Resource Center that was published on June 15, 2012, 77 FR 36034. USDOT OSDBU is extending the closing date to allow eligible entities time to adequately submit a proposal.

DATES: The submission period for the Notice of Funding Availability published on June 15, 2012 closing on July 16, 2012 is extended until July 31, 2012, 5 p.m. Eastern Standard Time. Also, the notice of award for the competed region on or before August 13, 2012 is extended until August 16, 2012.

ADDRESSES: Proposals must be electronically submitted to OSDBU via email at *SBTRC@dot.gov.*

FOR FURTHER INFORMATION CONTACT: For further information concerning this notice, contact Ms. Patricia Martin, U.S. Department of Transportation, Office of Small and Disadvantaged Business Utilization, 1200 New Jersey Avenue SE., W56–462, Washington, DC, 20590. Telephone: 1–800–532–1169. Email: *patricia.martin@dot.gov.*

SUPPLEMENTARY INFORMATION: In the June 15, 2012 document (Notice No. USDOT–OST–OSDBU–SBTRC2012–10; Docket Number: DOT–OST–2009–0092), the Department of Transportation (DOT), Office of the Secretary (OST), Office of Small and Disadvantaged Business Utilization (OSDBU) announces the opportunity for; (1) Business centered community-based organizations; (2) transportation-related trade associations; (3) colleges and universities; (4) community colleges or; (5) chambers of commerce, registered with the Internal Revenue Service as 501 C(6) or 501 C(3) tax-exempt organizations, to compete for participation in OSDBU's Small Business Transportation Resource Center (SBTRC) program in the Central Region.

Issued in Washington, DC on July 12, 2012.

Brandon Neal,

Director, Office of Small and Disadvantaged Business Utilization, Office of the Secretary, U.S. Department of Transportation.

[FR Doc. 2012–17570 Filed 7–18–12; 8:45 am]

BILLING CODE 4910–9X–P

DEPARTMENT OF TRANSPORTATION

Federal Aviation Administration

Agency Information Collection Activities: Requests for Comments; Clearance of Renewed Approval of Information Collection: Suspected Unapproved Parts Notification

AGENCY: Federal Aviation Administration (FAA), DOT.

ACTION: Notice and request for comments.

SUMMARY: In accordance with the Paperwork Reduction Act of 1995, FAA invites public comments about our intention to request the Office of Management and Budget (OMB) approval to renew an information collection. The **Federal Register** Notice with a 60-day comment period soliciting comments on the following collection of information was published on May 9, 2012, vol. 77, no. 90, page 27271. The information collected on the FAA Form 8120–11 is used by those who wish to report suspected unapproved parts to the FAA for review.

DATES: Written comments should be submitted by August 20, 2012.

FOR FURTHER INFORMATION CONTACT: Kathy DePaepe at (405) 954–9362, or by email at: *Kathy.A.DePaepe@faa.gov*.

SUPPLEMENTARY INFORMATION:

OMB Control Number: 2120–0552.

Title: Suspected Unapproved Parts Notification.

Form Numbers: FAA Form 8120–11.

Type of Review: Renewal of an information collection.

Background: 49 U.S.C. 44701 empowers the Administrator of the FAA to provide reasonable rules and regulations for minimum standards governing the design, materials, construction, and performance of aircraft, engines, and propellers as may be required to ensure safety in air transportation. Submission of the Suspected Unapproved Parts Report, FAA Form 8120–11, is necessary to ensure that only FAA-approved parts are installed on type certificated aircraft, and that continued airworthiness is maintained.

Respondents: Approximately 150 manufacturers, repair stations, aircraft owner/operators, and air carriers.

Frequency: Information is collected on occasion.

Estimated Average Burden per Response: 30 minutes.

Estimated Total Annual Burden: 75 hours.

ADDRESSES: Interested persons are invited to submit written comments on the proposed information collection to the Office of Information and Regulatory Affairs, Office of Management and Budget. Comments should be addressed to the attention of the Desk Officer, Department of Transportation/FAA, and sent via electronic mail to *oira_submission@omb.eop.gov*, or faxed to (202) 395–6974, or mailed to the Office of Information and Regulatory Affairs, Office of Management and Budget, Docket Library, Room 10102, 725 17th Street NW., Washington, DC 20503.

Public Comments Invited: You are asked to comment on any aspect of this information collection, including (a) Whether the proposed collection of information is necessary for FAA's performance; (b) the accuracy of the estimated burden; (c) ways for FAA to enhance the quality, utility and clarity of the information collection; and (d) ways that the burden could be minimized without reducing the quality of the collected information. The agency will summarize and/or include your comments in the request for OMB's clearance of this information collection.

Issued in Washington, DC on July 12, 2012.

Albert R. Spence,

FAA Assistant Information Collection Clearance Officer, IT Enterprises Business Services Division, AES–200.

[FR Doc. 2012–17614 Filed 7–18–12; 8:45 am]

BILLING CODE 4910–13–P

DEPARTMENT OF TRANSPORTATION

Federal Aviation Administration

Agency Information Collection Activities: Requests for Comments; Clearance of Renewed Approval of Information Collection: Damage Tolerance and Fatigue Evaluation of Composite Rotorcraft Structures

AGENCY: Federal Aviation Administration (FAA), DOT.

ACTION: Notice and request for comments.

SUMMARY: In accordance with the Paperwork Reduction Act of 1995, FAA invites public comments about our intention to request the Office of Management and Budget (OMB) approval to renew an information collection. To obtain type certification of a rotorcraft, an applicant must show that the rotorcraft complies with specific certification requirements. To show compliance, the applicant must submit substantiating data.

DATES: Written comments should be submitted by September 17, 2012.

FOR FURTHER INFORMATION CONTACT: Kathy DePaepe at (405) 954–9362, or by email at: *Kathy.A.DePaepe@faa.gov*.

SUPPLEMENTARY INFORMATION:

OMB Control Number: 2120–0753.

Title: Damage Tolerance and Fatigue Evaluation of Composite Rotorcraft Structures.

Form Numbers: There are no FAA forms associated with this collection.

Type of Review: Renewal of an information collection.

Background: The ''Damage Tolerance and Fatigue Evaluation of Composite Rotorcraft Structures'' final rule (76 FR 74655) revised parts 27 and 29 of Title 14 of the Code of Federal Regulations to add new certification standards for normal and transport category rotorcraft to address advances in structural damage tolerance and fatigue substantiation technology for composite rotorcraft structures. To obtain type certification of a rotorcraft, an applicant must show that the rotorcraft complies with specific certification requirements. To show compliance, the applicant must submit substantiating data. FAA engineers or designated engineer representatives from industry review the required data submittals to determine if the rotorcraft complies with the applicable minimum safety requirements for damage tolerance and fatigue evaluation of composite structures and that the rotorcraft has no unsafe features in the composite structures.

Respondents: 6 applicants for certification for 10.5 part 27 rotorcraft and 6 part 29 rotorcraft.

Frequency: Information is collected on occasion. The total burden estimate has been calculated over a 27 year analysis period.

Estimated Average Burden per Response: 178 hours.

Estimated Total Annual Burden: 109 hours.

ADDRESSES: Send comments to the FAA at the following address: Ms. Kathy DePaepe, Room 126B, Federal Aviation Administration, AES–200, 6500 S. MacArthur Blvd., Oklahoma City, OK 73169.

Public Comments Invited: You are asked to comment on any aspect of this information collection, including (a) Whether the proposed collection of information is necessary for FAA's performance; (b) the accuracy of the estimated burden; (c) ways for FAA to enhance the quality, utility and clarity of the information collection; and (d) ways that the burden could be minimized without reducing the quality of the collected information. The agency will summarize and/or include your

comments in the request for OMB's clearance of this information collection.

Issued in Washington, DC on July 12, 2012.

Albert R. Spence,

FAA Assistant Information Collection Clearance Officer, IT Enterprises Business Services Division, AES–200.

[FR Doc. 2012–17613 Filed 7–18–12; 8:45 am]

BILLING CODE 4910–13–P

DEPARTMENT OF TRANSPORTATION

Federal Aviation Administration

Agency Information Collection Activities: Requests for Comments; Clearance of Renewed Approval of Information Collection: Commercial Air Tour Operator Reports

AGENCY: Federal Aviation Administration (FAA), DOT.

ACTION: Notice and request for comments.

SUMMARY: In accordance with the Paperwork Reduction Act of 1995, FAA invites public comments about our intention to request the Office of Management and Budget (OMB) approval to renew for three-year clearance an information collection that has been granted emergency clearance. The **Federal Register** Notice with a 60-day comment period soliciting comments on the following collection of information was published on May 9, 2012, vol. 77, no. 90, page 27271–27272. The commercial air tour operational data provided to the FAA and NPS will be used by the agencies as background information useful in the development of air tour management plans and voluntary agreements for purposes of meeting the mandate of the National Parks Air Tour Management Act (NPATMA) of 2000.

DATES: Written comments should be submitted by August 20, 2012.

FOR FURTHER INFORMATION CONTACT: Kathy DePaepe at (405) 954–9362, or by email at: *Kathy.A.DePaepe@faa.gov*.

SUPPLEMENTARY INFORMATION:

OMB Control Number: 2120–0750.

Title: Commercial Air Tour Operator Reports.

Form Numbers: There are no FAA forms associated with this collection.

Type of Review: Request for three-year clearance of an information collection that has been granted short-term emergency clearance.

Background: The FAA Modernization and Reform Act of 2012 included amendments to the National Parks Air Tour Management Act (NPATMA) of 2000. One of these amendments requires commercial air tour operators conducting tours over national park units to begin reporting on the number of operations they conduct and any such other information prescribed by the FAA Administrator and the Director of the National Park Service (NPS). The Administrator and Director have 90 days from date of enactment of the FAA Modernization and Reform Act of 2012 (enacted February 14, 2012) to jointly issue an initial request for reports and the specified frequency and format of these reports. OMB granted emergency clearance of this information collection on April 25, 2012, expiring on October 31, 2012.

Respondents: Approximately 75 air tour operators.

Frequency: Information is collected quarterly, or annually for park units with fewer than 50 tours per year.

Estimated Average Burden per Response: 11.66 hours.

Estimated Total Annual Burden: 3,300 hours.

ADDRESSES: Interested persons are invited to submit written comments on the proposed information collection to the Office of Information and Regulatory Affairs, Office of Management and Budget. Comments should be addressed to the attention of the Desk Officer, Department of Transportation/FAA, and sent via electronic mail to *oira_submission@omb.eop.gov*, or faxed to (202) 395–6974, or mailed to the Office of Information and Regulatory Affairs, Office of Management and Budget, Docket Library, Room 10102, 725 17th Street NW., Washington, DC 20503.

Public Comments Invited: You are asked to comment on any aspect of this information collection, including (a) Whether the proposed collection of information is necessary for FAA's performance; (b) the accuracy of the estimated burden; (c) ways for FAA to enhance the quality, utility and clarity of the information collection; and (d) ways that the burden could be minimized without reducing the quality of the collected information. The agency will summarize and/or include your comments in the request for OMB's clearance of this information collection.

Issued in Washington, DC on July 12, 2012.

Albert R. Spence,

FAA Assistant Information Collection Clearance Officer, IT Enterprises Business Services Division, AES–200.

[FR Doc. 2012–17612 Filed 7–18–12; 8:45 am]

BILLING CODE 4910–13–P

DEPARTMENT OF TRANSPORTATION

Federal Motor Carrier Safety Administration

[Docket No. FMCSA–2012–0243]

Privacy Act of 1974; Department of Transportation, Federal Motor Carrier Safety Administration (FMCSA) 007 Pre-Employment Screening Program

AGENCY: Federal Motor Carrier Safety Administration (FMCSA) Department of Transportation (DOT).

ACTION: Notice to amend a system of records.

SUMMARY: In accordance with the Privacy Act of 1974, the Department of Transportation proposes to update and reissue a Department of Transportation system of records notice titled Department of Transportation/Federal Motor Carrier Safety Administration—007 Pre-Employment Screening Program. The updated system of records consists of information that is created and used by the Department's Pre-Employment Screening program to provide commercial drivers and persons conducting pre-employment screening services for the motor carrier industry electronic access to driver history reports extracted from the Department's Motor Carrier Management Information System (MCMIS).

As a result of biennial review of this system, the Privacy Office has made the five major modifications to the systems of records. The category of records identified as ''Financial Transaction Records'' in the previously published System of Records Notice for this system has been removed as the Department does not maintain these records. The ''Access Transaction Records'' record category also has been revised to clarify the types of information maintained about the two categories of users permitted to request access to records for the purposes of pre-employment screening. The routine uses have been updated to clarify disclosure of Pre-Employment Screening Program (PSP) records to industry service providers directly involved in the hiring of commercial motor vehicle (CMV) drivers on behalf of motor carriers and/or CMV drivers and the routine use concerning the sharing of CMV driver access transaction records with Validation Authorities (e.g. Lexis-Nexis). The system owner information has been modified to omit the contact information for the MCMIS and Freedom of Information Act systems of records and, instead, include only contact information for the PSP system

of records. Additionally, this Notice includes non-substantive changes to simplify the formatting and text of the previously published Notice. This updated system will be included in the Department of Transportation's inventory of record systems.

DATES: *Effective* August 21, 2012. Written comments should be submitted on or before the effective date. If no comments are received, the proposal will become effective on the above date. If comments are received, the comments will be considered and, where adopted, the documents will be republished with changes.

ADDRESSES: You may submit comments, identified by Docket No. FMCSA–2012–0243 by one of the following methods:

■ *Federal e-Rulemaking Portal: http://www.regulations.gov.* Follow the instructions for submitting comments.

■ *Mail:* Department of Transportation Docket Management, Room W12–140, 1200 New Jersey Ave. SE. Washington, DC 20590.

■ *Instructions:* All submissions received must include the agency name and docket number for this rulemaking. All comments received will be posted without change to *www.regulations.gov*, including any personal information provided.

■ *Docket:* For access to the docket to read background documents or comments received go to *www.regulations.gov.* Follow the online instructions for accessing the docket.

■ *Fax:* 202–493–2251. *Instructions:* You must include the agency name and Docket Number FMCSA–2012–0243. All comments received will be posted without change to *http://www.regulations.gov*, including any personal information provided.

Privacy Act: Anyone is able to search the electronic form of all comments received in any of our dockets by the name of the individual submitting the comment (or signing the comment, if submitted on behalf of an association, business, labor union, etc.). You may review DOT's Privacy Act notice in the **Federal Register** published on January 17, 2008 (73 FR 3316–3317), or you may visit *www.dot.gov/privacy.*

Docket: For access to the docket to read background documents or comments received, go to *http://www.regulations.gov* or to the street address listed above. Follow the online instructions for accessing the docket.

FOR FURTHER INFORMATION CONTACT: For general questions, please contact: Arlene Thompson, (202) 366–2094, *Arlene.Thompson@dot.gov.* For privacy issues please contact: Claire W. Barrett, Departmental Chief Privacy Officer, Privacy Office, Department of Transportation, Washington, DC 20590; *privacy@dot.gov;* or (202) 527–3284.

SUPPLEMENTARY INFORMATION: In accordance with the Privacy Act of 1974, the Department of Transportation (DOT)/Federal Motor Carrier Administration (FMCSA or Administration) proposes to update and reissue a current DOT system of records notice titled, ''Department of Transportation/Federal Motor Carrier Safety Administration—007 Pre-Employment Screening Program.'' The FMCSA's primary mission is to prevent commercial motor vehicle-related fatalities and injuries. The FMCSA contributes to safe motor carrier operations through strong enforcement of safety regulations; targeting high-risk carriers and commercial motor vehicle drivers; improving safety information systems and commercial motor vehicle technologies; strengthening commercial motor vehicle equipment and operating standards; and increasing safety awareness. To accomplish these activities, the FMCSA works with Federal, State, and local enforcement agencies, the motor carrier industry, labor safety interest groups, and others.

This system of records is used to satisfy requirements mandated by Congress in the Safe, Accountable, Flexible, Efficient Transportation Equity Act: A Legacy for Users, 49 U.S.C. 31150, Public Law 109–59, Section 4117. FMCSA believes that making this driver data available to potential employers and operator-applicants will improve the quality of safety data and help employers make more informed decisions when hiring commercial drivers. The PSP is a screening tool that allows motor carriers and individual drivers to purchase driving records from the FMCSA MCMIS system. A record purchased through PSP contains the most recent five years of crash data and the most recent three years of roadside inspection data, including serious safety violations for an individual driver. The record displays a snapshot in time, based on the most recent MCMIS data extract loaded into the PSP system.

This SORN makes four primary changes to the existing system of records. It removes an existing category of records, clarifies the information maintained in the ''Access Transaction Records,'' adds a new routine use, and clarifies an existing routine use. The category of records has been revised to exclude the category of ''Financial Transaction Records'' as this information is maintained exclusively by DOT's PSP Service Provider and these records are not considered federal records under the stewardship of the DOT. The ''Access Transaction Records'' record category was revised to clarify that information is maintained on the two categories of users permitted to request access to records for the purposes of pre-employment screening. In addition to transactions initiated by motor carriers, the record will include information on transactions initiated by industry service providers as authorized by the routine use added as part of this system of records notice. The category of records more clearly states the information maintained on requests initiated by operator-applicant requesting his or her own PSP record. This information establishes a record of account access to ensure that operator-applicants only access their own information. These changes have been made to more clearly reflect existing FMCSA processes and do not introduce changes in actual operations.

The routine uses have been updated to permit disclosure of PSP records to industry service providers directly involved in the hiring of commercial motor vehicle (CMV) drivers on behalf of motor carriers and/or CMV drivers. This change reflects motor carrier business models which may include the use of industry service providers to directly hire commercial motor vehicle drivers on behalf of motor carriers. Additionally, the routine use concerning the sharing of CMV driver Access Transaction Records with Validation Authorities (e.g. Lexis-Nexis) was clarified by removing information incorrectly included in the routine use that should be discussed in the Notice's categories of information.

The system owner information has been modified to include only contact information for the PSP system of records and no longer included information for the MCMIS and Freedom of Information Act (FOIA) systems, which are separate and distinct system of records. The complete system of records notices for these systems may be found at *www.dot.gov/privacy.*

FMCSA plans to introduce PSP Mobile iOS Application as an alternative means of providing information available through the PSP Web site to the authorized users. FMCSA does not require individuals to register or provide any PII as a condition of downloading PSP iOS application. Individuals downloading the PSP iOS application must fulfill Apple's registration requirements prior to downloading the application. Apple does not provide FMCSA any PII of individuals who download the PSP iOS application from its site. Requesters seeking information on CMV drivers

through the PSP iOS mobile application can only access PSP records using the same authorization process and data elements described in this System of Records Notice.

This updated system will be included in DOT's inventory of record systems.

SYSTEM NUMBER:

DOT/FMCSA 007.

SYSTEM NAME:

Department of Transportation Federal Motor Carrier Safety Administration Pre-Employment Screening Program.

SECURITY CLASSIFICATION:

Unclassified, Sensitive.

SYSTEM LOCATION:

Records are maintained at the DOT Service Provider sites managed by AT&T in Ashburn, VA and Allen, TX.

CATETORIES OF INDIVIDUALS COVERED BY THE SYSTEM OF RECORDS:

PSP records will include personally identifiable information (PII) pertaining to Commercial Motor Vehicle (CMV) drivers, as defined by 49 CFR 390.5, (referred to in this system of records notice as operator-applicants). PSP will also include access transaction records. For CMV drivers, this will include personal information submitted by the CMV driver to access his or her personal PSP record. For motor carriers or authorized industry service provider, Access Transaction Records will include the unique username and password submitted by the user to access the PSP system and the CMV driver information submitted by the motor carrier or authorized industry service provider to retrieve a PSP record.

CATEGORIES OF RECORDS:

Categories of records in this system include:

CMV crash and inspection records. Data extract from the FMCSA Motor Carrier Management Information System (MCMIS) containing the most recent five years' crash data and the most recent three years' inspection information for operator-applicants including:

- CMV driver name (last, first)
- CMV driver date of birth
- CMV driver license number
- CMV driver license State

Access transaction records. In the case of a motor carrier or industry service provider accessing a CMV driver's PSP record, transaction records include information about the subject of the electronic record request including:

- CMV driver name (last, first, middle initial)
- CMV driver date of birth
- CMV driver license number
- CMV driver license State

Access Transaction Records also include information about the motor carrier or industry service provider accessing the record including:

- User unique system username
- User unique system password

In the case of an operator-applicant requesting his or her own PSP record, the Access Transaction Record will include:

- CMV driver name (last, first, middle initial)
- CMV driver date of birth
- CMV driver license number
- CMV driver license State
- CMV driver address.

AUTHORITY FOR MAINTENANCE OF THE SYSTEM:

49 U.S.C. 31150, as added by section 4117 of Public Law 109–59 [Safe, Accountable, Flexible, Efficient Transportation Equity Act: A Legacy for Users (SAFETEA–LU)].

PURPOSE(S):

The purpose of this system is to make CMV crash and inspection records available to authorized operator-applicants, authorized industry service providers, and authorized motor carriers. Records maintained in the system will also support operational management of the PSP program.

ROUTINE USES OF RECORDS MAINTAINED IN THE SYSTEM, INCLUDING CATEGORIES OF USERS AND PRUPOSES OF USE:

In addition to those disclosures generally permitted under Section (b) of the Privacy Act, 5 U.S.C. 552a(b), all or a portion of the records or information contained in this system may be disclosed outside of DOT as a routine use pursuant to 5 U.S.C. 552a(b)(3) as follows:

1. To authorized industry service providers and motor carriers as part of the operator-applicant's PSP record; authorized industry service providers and motor carriers may use PSP records only for purposes of pre-employment safety screening of operator-applicants and must have the operator-applicant's consent to access the PSP record;

2. To the DOT Validation Authority (e.g., Lexis-Nexis) to verify and validate the presented identity of the individual operator-applicant requesting access to his or her own inspection and crash data.

3. Other possible routine uses of the information, applicable to all DOT Privacy Act systems of records, are published in the **Federal Register** at 75 FR 82132, December 29, 2010, under ''Prefatory Statement of General Routine Uses'' (available at *http://www.dot.gov/privacy/privacyactnotices*).

DISCLOSURE TO CONSUMER REPORTING AGENCIES:

None.

POLICIES AND PRACTICES FOR STORING, RETRIEVING, ACCESSING, RETAINING, AND DISPOSING OF RECORDS:

STORAGE:

Records in this system are stored electronically or on paper in secure facilities. Electronic records may be stored on magnetic disc, tape, digital media, and CD–ROM. Any paper records received or required for purposes of processing data requests will be stored in secure file folders at the DOT Service Provider's secure storage facility.

RETRIEVABILITY:

Records will be retrieved by using the operator-applicant's last name, date of birth, license number, and license State.

SAFEGUARDS:

All records in the system will be protected from unauthorized access through appropriate administrative, physical, and technical safeguards. Electronic files will be stored in a database secured by password security, encryption, firewalls, and secured operating systems, to which only authorized Service Provider or DOT/FMCSA personnel will have access, on a need-to-know basis. Paper files will be stored in file cabinets in a locked file room to which only the authorized Service Provider and DOT/FMCSA personnel will have access, on a need-to-know basis. All access to the electronic system and paper files will be logged and monitored. All PII data elements will be encrypted in the PSP system.

The Service Provider will be subject to routine audits of the PSP program by FMCSA to ensure compliance with the Privacy Act, applicable sections of the Fair Credit Reporting Act and other applicable Federal laws, regulations, or other requirements.

Access by external users (operator-applicants, authorized industry service providers and motor carriers) will be restricted within the system based upon the user's role as an authorized industry service provider, motor carrier, or validated operator-applicant. An authorized industry service provider or motor carrier is an entity or person who has been provided a unique user identification and password and must use the unique identification and password to access data in PSP. External users will be able to query the CMV

crash and inspection database only. The Service Provider will provide users with an advisory statement that authorized industry service providers and motor carriers could be subject to criminal penalties and other sanctions under 18 U.S.C. 1001 for misuse of the PSP system.

In order for an authorized industry service provider or motor carrier to receive an individual operator-applicant's crash and inspection data, the authorized industry service provider or motor carrier must certify, for each request, under penalty of perjury, that the request is for pre-employment purposes only and that written or electronic consent of the operator-applicant has been obtained. Upon completion of certification, the Service Provider will provide the individual operator-applicant data to the industry service provider or motor carrier via the secure PSP Web site. The authorized industry service provider or motor carrier will access this individual's information by entering a unique identification username and password. Authorized industry service providers or motor carriers will be required to maintain each operator-applicant's signed, written consent form or electronic signature for five years. Authorized industry service providers or motor carriers are subject to random audits by DOT to ensure that written or electronic consent of operator-applicants was obtained.

The PSP system also allows validated operator-applicants to access their own crash and inspection data upon written or electronic request. Upon receipt of an operator-applicant's request, the Service Provider will validate the identity of the requestor (operator-applicant) by using his or her full name, date of birth, driver license number, driver license State and current address against a validation authority.

The contractor and FMCSA have established an ongoing, random-selection audit process to monitor compliance with the written consent obligation. The audit requirements and penalties process is incorporated by reference as part of the contract between FMCSA and the contractor. The purpose of the audit requirements and penalties process is to ensure that the account holder obtains a driver-signed consent form prior to completing a PSP driver record inquiry in accordance with the Fair Credit Reporting Act, 15 U.S.C. 1681 *et seq.,* and 49 U.S.C. 31150. The contractor will penalize an account holder, who fails to comply with the audit requirements. Based on the nature and frequency of these violations, the contractor may send a written warning, suspend, or terminate the account holder from the PSP.

Individuals who access the PSP system via the iOS application are subject to the privacy policy integrated in the application.

RETENTION AND DISPOSAL:

1. CMV crash and inspection records: Pursuant to General Records Schedule (GRS) 20 (''Electronic Records,'' February 2008, see *http://www.archives.gov/records-mgmt/ardor/grs20.html*), governing extract files, each monthly MCMIS extract in PSP is deleted approximately three months after being superseded by a current MCMIS extract, unless needed longer for administrative, legal, audit or other operational purposes.

2. Access Transaction Records: Pursuant to GRS 24, ''Information Technology Operations and Management Records,'' Item 6, April 2010, see *http://www.archives.gov/records-mgmt/grs/grs24.html*) Access Transaction Records are retained for a period of five years.

SYSTEM MANAGER CONTACT INFORMATION:

PSP System Manager: Office of Information Technology; Federal Motor Carrier Safety Administration; U.S. Department of Transportation; 1200 New Jersey Avenue SE., W65–319; Washington, DC 20590.

NOTIFICATION PROCEDURE:

Operator-applicants wishing to know if their inspection and crash records appear in this system may directly access the PSP system or make a request in writing to the PSP System Manager identified under ''System Manager Contact Information.''

Individual operator-applicants wishing to know if their Access Transaction Records appear in this system may make a written request to the following address: NIC Technologies, 4601 N. Fairfax Drive, Suite 1160, Arlington, VA 22203.

Any other requests for records about yourself from this system of records or any other Departmental system of records your request must conform with the Privacy Act regulations set forth in 49 CFR part 10. You must sign your request, and your signature must either be notarized or submitted under 28 U.S.C. 1746, a law that permits statements to be made under penalty of perjury as a substitute for notarization. While no specific form is required, you may obtain forms for this purpose from the Chief Freedom of Information Act Officer, *http://www.dot.gov/foia* or 202.366.4542. In addition you should provide the following:

An explanation of why you believe the Department would have information on you;

■ Identify which component(s) of the Department you believe may have the information about you;

■ Specify when you believe the records would have been created;

■ Provide any other information that will help the FOIA staff determine which DOT component agency may have responsive records; and

■ If your request is seeking records pertaining to another living individual, you must include a statement from that individual certifying his/her agreement for you to access his/her records.

Without this bulleted information the component(s) may not be able to conduct an effective search, and your request may be denied due to lack of specificity or lack of compliance with applicable regulations.

RECORD ACCESS PROCEDURES:

See ''Notification Procedure'' above.

CONTESTING RECORDS PROCEDURE:

Operator-applicants seeking to contest the content of information about them in this system should apply to the System Manager by following the same procedures as indicated under ''Notification Procedure.'' Operator-applicants may also submit a data challenge to FMCSA's online system to record and monitor challenges to FMCSA data, DataQs. The system can be accessed via the DataQs Web site (*https://dataqs.fmcsa.dot.gov/login.asp*). The DataQs system, provides an electronic means for operator-applicants to file concerns about Federal and State data contained in the PSP report. Specifically, DataQs allows an individual to challenge data maintained by FMCSA on, among other things, crashes, inspections, registration, operating authority, safety audits and enforcement actions. Through this system, data concerns are automatically forwarded to the appropriate Federal or State office for processing and resolution. Any challenges to data provided by State agencies must be resolved by the appropriate State agency. Additionally, FMCSA is not authorized to direct a State to change or alter MCMIS data for violations or inspections originating within a particular State(s). Once a State office makes a determination on the validity of a challenge, FMCSA considers that decision as the final resolution of the challenge. FMCSA cannot change State records without State consent. The system also allows filers to monitor the status of each filing.

RECORD SOURCE CATEGORIES:

1. CMV crash and inspection records: All commercial driver crash and inspection data in PSP is received from a monthly MCMIS data extract. The MCMIS SORN identifies the source(s) of the information in MCMIS. (FMCSA modified the MCMIS SORN to describe the system's sharing of PII with the Driver Information Resource and PSP systems. See 74 FR 66391, December 15, 2009). All DOT SORNs may be found at *www.dot.gov/privacy.*

2. Access transaction records: An audit trail of those entities or persons that accessed the PSP (i.e. authorized motor carriers, authorized industry service providers, or validated operator-applicants) is automatically created when requests are initiated and when data is released by the Service Provider. These records are internal documents to be used by the Service Provider and FMCSA for auditing, monitoring and compliance purposes.

EXEMPTIONS CLAIMED FOR THE SYSTEM:

None.

Issued in Washington, DC on July 13, 2012.

Claire W. Barrett,

Departmental Privacy Officer.

[FR Doc. 2012–17597 Filed 7–18–12; 8:45 am]

BILLING CODE 4910–EX–P

DEPARTMENT OF TRANSPORTATION

Surface Transportation Board

Notice and Request for Comments

AGENCY: Surface Transportation Board.

ACTION: 30-day notice of request for approval: Statutory Licensing and Consolidation Authority.

SUMMARY: As required by the Paperwork Reduction Act of 1995, 44 U.S.C. 3501–3519 (PRA), the Surface Transportation Board (STB or Board) gives notice that it has submitted a request to the Office of Management and Budget (OMB) for approval of the information collection required from those seeking licensing authority under 49 U.S.C. 10901–03 and consolidation authority under §§ 11323–26. Under these Title 49 provisions, rail carriers and non-carriers are required to file an application with the Board, or seek an exemption (through petition or notice) from the full application process under § 10502, before they may construct, acquire, or operate a line of railroad; abandon or discontinue operations over a line of railroad; or consolidate their interests through a merger or common-control arrangement. The Board previously published a notice about this collection in the **Federal Register** on December 12, 2011, at 76 FR 77312–14 (60-day notice). That notice allowed for a 60-day public review and comment period. No comments were received.

The information collection for which approval is sought is described in detail below. Comments may now be submitted to OMB concerning: (1) The accuracy of the Board's burden estimates; (2) ways to enhance the quality, utility, and clarity of the information collected; (3) ways to minimize the burden of the collection of information on the respondents, including the use of automated collection techniques or other forms of information technology, when appropriate; and (4) whether this collection of information is necessary for the proper performance of the functions of the Board, including whether the collection has practical utility.

Description of Collection

Title: Statutory Licensing and Consolidation Authority.

OMB Control Number: 2140–00##.

STB Form Number: None.

Type of Review: Existing collection in use without an OMB control number.

Respondents: Rail carriers and non-carriers seeking statutory licensing or consolidation authority or an exemption from filing an application for such authority.

Number of Respondents: 106.[1]

Estimated Time per Response: Between 5 hours and 300 hours, depending on the type of request and complexity of the circumstances surrounding request for authority (based on actual survey of respondents).

Frequency: On occasion.

TABLE—NUMBER OF RESPONSES IN FY 2011

Type of filing	Number of filings under 49 U.S.C. 10901–03 and 11323–26
Applications	3
Petitions*	18
Notices*	156

* Under § 10502, petitions for exemption and notices of exemption are permitted in lieu of an application.

Total Burden Hours (annually including all respondents): 4,317 hours (sum total of estimated hours per response × number of responses for each type of filing).

TABLE—ESTIMATED HOURS PER RESPONSE

Type of filing	Number of hours per response under 49 U.S.C. 10901–03 and 11323–26
Applications[2]	524
Petitions*	58
Notices*	19

* Under § 10502, petition for exemptions and notices of exemption are permitted in lieu of an application.

Total "Non-hour Burden" Cost (such as filing fees): $669,950 (Sum of estimated "non-hour burden" cost per response × Number of Responses for each statutory section and type of filing).[3]

TABLE—ESTIMATED "NON-HOUR BURDEN" COST PER RESPONSE

Type of Cost	§ 10901	§ 10902	§ 10903	§§ 11323–26
Applications Filing Fees	Extension, Acquisition, etc.—$7,200 Construction—$74,500	$6,200	$22,100	Major—$1,488,500 Significant—$297,700 Minor—$7,500

[1] In Fiscal Year (FY) 2011, there were 177 filings under 49 U.S.C. 10901–03 and 11323–26. See *Table—Number of Responses in FY 2011.* However, approximately 40% of the filings were additional filings submitted by railroads that had already submitted filings during the time period. Therefore, the number of respondents is approximately 40% less than the number of filings.

[2] Because most respondents seek authority under the Board's expedited exemption process, rather than the more burdensome application process, the sample size for applications filed under §§ 10901–03 and 11323–26 is small. For example, under these provisions, only 3 applications were filed with the Board during the FY 2011, all of which were reported by the industry as routine and noncontroversial. In the 60-day notice, the Board reported these numbers as they were provided by industry, explaining in a footnote that the available survey data appeared to understate the substantial time and cost often associated with the application process. Since that time, the Board has compiled additional data and has adjusted the burden hours for applications to reflect the addition to the sample of a traditionally larger application that was filed in FY 2010. Thus, the hourly burden per application has been increased to more accurately reflect the differences among the types of filings.

[3] Because filing fees may vary within a particular statutory section, an average filing fee was used (except for applications under §§ 11323–26, where only minor transactions were filed in FY 2011).

TABLE—ESTIMATED "NON-HOUR BURDEN" COST PER RESPONSE—Continued

Type of Cost	§ 10901	§ 10902	§ 10903	§§ 11323–26
Petitions* Filing Fees	Extension, Acquisition, etc.—$12,500 Construction—$74,500	$6,600	$6,300	$6,600—$9,300
Notices* Filing Fees	$1,800	1,800	3,600	$1,100—$2,400
Other Costs (i.e., copying and mailing)	$450	450	450	$450

* Under § 10502, petition for exemptions and notices of exemption are permitted in lieu of an application.

Needs and Uses: Under the Interstate Commerce Act, persons seeking to construct, acquire or operate a line of railroad, and railroads seeking to abandon or to discontinue operations over a line of railroad or, in the case of two or more railroads, to consolidate their interests through merger or a common-control arrangement are required to file an application for prior approval and authority with the Board. *See* 49 U.S.C. 10901–03 and 11323–26. Under 49 U.S.C. 10502, persons may seek an exemption from many of the application requirements of §§ 10901–03 and 11323–26 by filing with the Board a petition for exemption or notice of exemption in lieu of an application. The collection by the Board of these applications, petitions, and notices enables the Board to meet its statutory duty to regulate the referenced rail transactions.

DATES: Comments on this information collection should be submitted by August 15, 2012.

ADDRESSES: Written comments should be identified as ''Paperwork Reduction Act Comments, Surface Transportation Board, Statutory Licensing and Consolidation Authority.'' These comments should be directed to the Office of Management and Budget, Office of Information and Regulatory Affairs, Attention: Patrick Fuchs, Surface Transportation Board Desk Officer, by fax at (202) 395–5167; by mail at OMB, Room 10235, 725 17th Street NW., Washington, DC 20500; or by email at *OIRA_SUBMISSION @OMB.EOP.GOV.*

FOR FURTHER INFORMATION CONTACT: Marilyn Levitt, (202) 245–0269. [Federal Information Relay Service (FIRS) for the hearing impaired: (800) 877–8339.] Relevant STB regulations are referenced below and may be viewed on the STB's Web site under E-Library > Reference: STB Rules, <*http://www.stb.dot.gov/stb/elibrary/ref_stbrules.html*>.

SUPPLEMENTARY INFORMATION: Under §§ 10901–03 and 11323–26, an application is required to seek authority under these sections, unless an applicant receives an exemption under 49 U.S.C. 10502. Respondents seeking such authority from the Board must submit certain information required under the Board's related regulations. The table below shows the statutory and regulatory provisions under which the Board requires the information collection that are the subject of this notice.

TABLE—STATUTORY AND REGULATORY PROVISIONS

Certificate required	Statutory provision	Regulations
Construct, Acquire, or Operate Railroad Lines	49 U.S.C. 10901	49 CFR part. 1150.
Short Line purchases by Class II and Class III Rail Carriers	49 U.S.C. 10902	49 CFR 1150.41–45.
Abandonments and Discontinuances	49 U.S.C. 10903	49 CFR part. 1152.
Railroad Acquisitions, Trackage Rights, and Leases	49 U.S.C. 11323–26	49 CFR part. 1180.

Under the PRA, a Federal agency conducting or sponsoring a collection of information must display a currently valid OMB control number. A collection of information, which is defined in 44 U.S.C. 3502(3) and 5 CFR 1320.3(c), includes agency requirements that persons submit reports, keep records, or provide information to the agency, third parties, or the public. Under § 3506(b) of the PRA, Federal agencies are required to provide, concurrent with an agency's submitting a collection to OMB for approval, a 30-day notice and comment period, through publication in the **Federal Register**, concerning each proposed collection of information, including each proposed extension of an existing collection of information.

Dated: July 16, 2012.

Jeffrey Herzig,

Clearance Clerk.

[FR Doc. 2012–17615 Filed 7–18–12; 8:45 am]

BILLING CODE 4915–01–P

DEPARTMENT OF THE TREASURY

Fiscal Service

Surety Companies Acceptable on Federal Bonds—Termination and Merger: Harleysville Mutual Insurance Company (NAIC #14168)

AGENCY: Financial Management Service, Fiscal Service, Department of the Treasury.

ACTION: Notice.

SUMMARY: This is Supplement No. 22 to the Treasury Department Circular 570, 2011 Revision, published July 1, 2011, at 76 FR 38892.

FOR FURTHER INFORMATION CONTACT: Surety Bond Branch at (202) 874–6850.

SUPPLEMENTARY INFORMATION: Notice is hereby given that the Certificate of Authority issued by the Treasury to the above-named company under 31 U.S.C. 9305 to qualify as acceptable surety on Federal bonds has been terminated. The above-named company merged with and into Nationwide Mutual Insurance Company (NAIC #23787) effective May 1, 2012. The surviving corporation of the merger activity is Nationwide Mutual Insurance Company (NAIC #23787), an Ohio domiciled corporation. Federal bond-approving officials should annotate their reference copies of the Treasury Department Circular 570 (''Circular''), 2011 Revision, to reflect this change.

In the event bond-approving officers have questions relating to bonds issued by the above-named company, they should contact Nationwide Mutual Insurance Company at (614) 249–7111.

The Circular may be viewed and downloaded through the Internet at *www.fms.treas.gov/c570.*

Questions concerning this notice may be directed to the U.S. Department of the Treasury, Financial Management Service, Financial Accounting and

Services Division, Surety Bond Branch, 3700 East-West Highway, Room 6F01, Hyattsville, MD 20782.

Dated: June 29, 2012.

Laura Carrico,

Director, Financial Accounting and Services Division, Financial Management Service.

[FR Doc. 2012–17359 Filed 7–18–12; 8:45 am]

BILLING CODE 4810–35–M

DEPARTMENT OF THE TREASURY

Fiscal Service

Surety Companies Acceptable on Federal Bonds—Termination: Peerless Insurance Company (NAIC #24198)

AGENCY: Financial Management Service, Fiscal Service, Department of the Treasury.

ACTION: Notice.

SUMMARY: This is Supplement No. 21 to the Treasury Department Circular 570, 2011 Revision, published July 1, 2011, at 76 FR 38892.

FOR FURTHER INFORMATION CONTACT: Surety Bond Branch at (202) 874–6850.

SUPPLEMENTARY INFORMATION: Notice is hereby given that the Certificate of Authority issued by the Treasury to the above-named company under 31 U.S.C. 9305 to qualify as acceptable surety on Federal bonds is terminated effective June 30, 2012. Federal bond-approving officials should annotate their reference copies of the Treasury Department Circular 570 (''Circular''), 2011 Revision, to reflect this change.

With respect to any bonds currently in force with this company, bond-approving officers may let such bonds run to expiration and need not secure new bonds. However, no new bonds should be accepted from this company, and bonds that are continuous in nature should not be renewed.

The Circular may be viewed and downloaded through the Internet at *www.fms.treas.gov/c570.*

Questions concerning this notice may be directed to the U.S. Department of the Treasury, Financial Management Service, Financial Accounting and Services Division, Surety Bond Branch, 3700 East-West Highway, Room 6F01, Hyattsville, MD 20782.

Dated: June 20, 2012.

Laura Carrico,

Director, Financial Accounting and Services Division.

[FR Doc. 2012–17360 Filed 7–18–12; 8:45 am]

BILLING CODE 4810–35–M

DEPARTMENT OF VETERANS AFFAIRS

[OMB Control No. 2900–0740]

Proposed Information Collection (Authorization To Substitute a Claim of a Deceased Claimant) Activity: Comment Request

AGENCY: Veterans Benefits Administration, Department of Veterans Affairs.

ACTION: Notice.

SUMMARY: The Veterans Benefits Administration (VBA), Department of Veterans Affairs (VA), is announcing an opportunity for public comment on the proposed collection of certain information by the agency. Under the Paperwork Reduction Act (PRA) of 1995, Federal agencies are required to publish notice in the **Federal Register** concerning each proposed collection of information, including each proposed extension of a currently approved collection, and allow 60 days for public comment in response to the notice. This notice solicits comments on the information needed to allow claimants to request substitution for a claimant, who passed away, prior to VA processing a claim to completion.

DATES: Written comments and recommendations on the proposed collection of information should be received on or before September 17, 2012.

ADDRESSES: Submit written comments on the collection of information through Federal Docket Management System (FDMS) at *www.Regulations.gov* or to Nancy J. Kessinger, Veterans Benefits Administration (20M35), Department of Veterans Affairs, 810 Vermont Avenue NW., Washington, DC 20420 or email to *nancy.kessinger@va.gov.* Please refer to ''OMB Control No. 2900–0740'' in any correspondence. During the comment period, comments may be viewed online through FDMS.

FOR FURTHER INFORMATION CONTACT: Nancy J. Kessinger at (202) 632–8924 or Fax (202) 275–5947.

SUPPLEMENTARY INFORMATION: Under the PRA of 1995 (Pub. L. 104–13; 44 U.S.C. 3501–3521), Federal agencies must obtain approval from the Office of Management and Budget (OMB) for each collection of information they conduct or sponsor. This request for comment is being made pursuant to Section 3506(c)(2)(A) of the PRA.

With respect to the following collection of information, VBA invites comments on: (1) Whether the proposed collection of information is necessary for the proper performance of VBA's functions, including whether the information will have practical utility; (2) the accuracy of VBA's estimate of the burden of the proposed collection of information; (3) ways to enhance the quality, utility, and clarity of the information to be collected; and (4) ways to minimize the burden of the collection of information on respondents, including through the use of automated collection techniques or the use of other forms of information technology.

Title: Authorization to Substitute a Claim of a Deceased Claimant, VA Form 21–0847.

OMB Control Number: 2900–0740.

Type of Review: Extension of a currently approved collection.

Abstract: VA Form 21–0847 will be used to allow claimants to request substitutions for a claimant, who passed away, prior to VA processing a claim to completion. This is only allowed when a claimant dies while a claim or appeal for any benefit under a law administered by the VA is pending. The substitute claimant would be eligible to receive accrued benefits due to a deceased claimant under Section 5121(a). The substitute claim must be filed no later than one year after the date of the death of the claimant. By law, VA must have a claimant's or beneficiary's written permission (an ''authorization'') to be a substitute claimant. The claimant or beneficiary may revoke the authorization at any time, except if VA has already acted based on the permission.

Affected Public: Individuals or households.

Estimated Annual Burden: 1,667.

Estimated Average Burden per Respondent: 5 minutes.

Frequency of Response: One time.

Estimated Number of Respondents: 20,000.

Dated: July 13, 2012.

By direction of the Secretary.

Denise McLamb,

Program Analyst, Enterprise Records Service.

[FR Doc. 2012–17504 Filed 7–18–12; 8:45 am]

BILLING CODE 8320–01–P

DEPARTMENT OF VETERANS AFFAIRS

[OMB Control No. 2900–0113]

Agency Information Collection (Application for Fee or Personnel Designation) Activity Under OMB Review

AGENCY: Veterans Benefits Administration, Department of Veterans Affairs.

ACTION: Notice.

SUMMARY: In compliance with the Paperwork Reduction Act (PRA) of 1995 (44 U.S.C. 3501–3521), this notice announces that the Veterans Benefits Administration, Department of Veterans Affairs, has submitted the collection of information abstracted below to the Office of Management and Budget (OMB) for review and comment. The PRA submission describes the nature of the information collection and its expected cost and burden and includes the actual data collection instrument.

DATES: Comments must be submitted on or before August 20, 2012.

ADDRESSES: Submit written comments on the collection of information through *www.Regulations.gov;* or to VA's OMB Desk Officer, OMB Human Resources and Housing Branch, New Executive Office Building, Room 10235, Washington, DC 20503 (202) 395–7316. Please refer to ''OMB Control No. 2900–0113'' in any correspondence.

FOR FURTHER INFORMATION CONTACT: Denise McLamb, Enterprise Records Service (005R1B), Department of Veterans Affairs, 810 Vermont Avenue NW., Washington, DC 20420, (202) 632–7479, fax (202) 632–7583 or email *denise.mclamb@mail.va.gov.* Please refer to ''OMB Control No. 2900–0113.''

SUPPLEMENTARY INFORMATION:

Title: Application for Fee or Personnel Designation, VA Form 26–6681.

OMB Control Number: 2900–0113.

Type of Review: Extension of a currently approved collection.

Abstract: Applicants complete VA Form 26–6681 to apply for a position as a designate fee appraiser or compliance inspector. VA will use the data collected to determine the applicant's experience in the real estate valuation field.

An agency may not conduct or sponsor, and a person is not required to respond to a collection of information unless it displays a currently valid OMB control number. The **Federal Register** Notice with a 60-day comment period soliciting comments on this collection of information was published on May 10, 2012, at page 27543.

Affected Public: Individuals or households.

Estimated Annual Burden: 1,000 hours.

Estimated Average Burden per Respondent: 30 minutes.

Frequency of Response: One-time.

Estimated Number of Respondents: 2,000.

Dated: July 13, 2012.

By direction of the Secretary.

Denise McLamb,

Program Analyst, Enterprise Records Service.

[FR Doc. 2012–17508 Filed 7–18–12; 8:45 am]

BILLING CODE 8320–01–P

DEPARTMENT OF VETERANS AFFAIRS

[OMB Control No. 2900–0260]

Proposed Information Collection (Request for and Authorization To Release Medical Records or Health Information) Activity: Comment Request

AGENCY: Veterans Health Administration, Department of Veterans Affairs.

ACTION: Notice.

SUMMARY: The Veterans Health Administration (VHA) is announcing an opportunity for public comment on the proposed collection of certain information by the agency. Under the Paperwork Reduction Act (PRA) of 1995, Federal agencies are required to publish notice in the **Federal Register** concerning each proposed collection of information, including each proposed revision of a currently approved collection, and allow 60 days for public comment in response to the notice. This notice solicits comments on information needed to obtain a patient written consent to disclose medical records or health information to individuals or third parties.

DATES: Written comments and recommendations on the proposed collection of information should be received on or before September 17, 2012.

ADDRESSES: Submit written comments on the collection of information through the Federal Docket Management System (FDMS) at *www.Regulations.gov;* or to Cynthia Harvey-Pryor, Veterans Health Administration (10P7BFP), Department of Veterans Affairs, 810 Vermont Avenue NW., Washington, DC 20420 or email: *cynthia.harvey-pryor@va.gov.* Please refer to ''2900–0260'' in any correspondence. During the comment period, comments may be viewed online through FDMS.

FOR FURTHER INFORMATION CONTACT: Cynthia Harvey-Pryor (202) 461–5870 or Fax (202) 273–9387.

SUPPLEMENTARY INFORMATION: Under the PRA of 1995 (Pub. L. 104–13; 44 U.S.C. 3501–3521), Federal agencies must obtain approval from the Office of Management and Budget (OMB) for each collection of information they conduct or sponsor. This request for comment is being made pursuant to Section 3506(c)(2)(A) of the PRA.

With respect to the following collection of information, VHA invites comments on: (1) Whether the proposed collection of information is necessary for the proper performance of VHA's functions, including whether the information will have practical utility; (2) the accuracy of VHA's estimate of the burden of the proposed collection of information; (3) ways to enhance the quality, utility, and clarity of the information to be collected; and (4) ways to minimize the burden of the collection of information on respondents, including through the use of automated collection techniques or the use of other forms of information technology.

Titles:

a. Request for and Authorization to Release Medical Records or Health Information, VA Form 10–5345.

b. Individual's Request for a Copy of their Own Health Information, VA Form 10–5345a.

c. My Health*e*Vet (MHV)—Individuals' Request for a Copy of Their Own Health Information, VA Form 10–5345a–MHV.

d. Restriction of the Release of Individually-Identifiable Health Information through Nationwide Health Information Network (NwHIN), VA Form 10–0525a.

e. Request for and Authorization to Release Protected Health Information to Nationwide Health Information Network, VA Form 10–0485.

OMB Control Number: 2900–0260.

Type of Review: Revision of a currently approved collection.

Abstracts:

a. VA Form 10–5345 is used to obtain a written consent from patients before information concerning his or her treatment for alcoholism or alcohol abuse, drug abuse, sickle cell anemia, or infection with the human immunodeficiency virus (HIV) can be disclosed to private insurance companies, physicians and other third parties.

b. Patients complete VA Form 10–5345a to request a copy of their health information maintained at Department of Veterans Affairs.

c. VA Form 10–5345a–MHV is completed by individuals requesting their health information electronically through My Health*e*Vet.

d. VA Form 10–0525a is completed by individuals to restrict the sharing their electronic health information through the NWHIN.

e. VA Form 10–0485 is used to electronically exchange protected health information between VA and approved

Nationwide Health Information Network participants.

Affected Public: Individuals or households.

Estimated Total Annual Burden

a. VA Form 10–5345—10,000 hours.
b. VA Form 10–5345a—15,000 hours.
c. VA Form 10–5345a–MVH—35,000 hours.
d. VA Form 10–0525a—50 hours.
e. VA Form 10–0485—500 hours.

Estimated Average Burden Per Respondent—2 minutes for VA Form 10–5345 and 3 minutes for VA Forms 10–5345a, 10–5345a–MVH, 10–0525a, 10–0485.

Frequency of Response: On occasion.

Estimated Number of Respondents:

a. VA Form 10–5345—300,000.
b. VA Form 10–5345a—300,000.
c. 10–5345a–MVH—700,000.
d. VA Form 10–0525a—1,000.
e. VA Form 10–0485—10,000.

Dated: July 13, 2012.

By direction of the Secretary.

Denise McLamb,

Program Analyst, Enterprise Records Service.

[FR Doc. 2012–17506 Filed 7–18–12; 8:45 am]

BILLING CODE 8320–01–P

DEPARTMENT OF VETERANS AFFAIRS

[OMB Control No. 2900–NEW (VA Form 21–0958)]

Proposed Information Collection (Notice of Disagreement) Activity: Comment Request

AGENCY: Veterans Benefits Administration, Department of Veterans Affairs.

ACTION: Notice.

SUMMARY: The Veterans Benefits Administration (VBA), Department of Veterans Affairs (VA), is announcing an opportunity for public comment on the proposed collection of certain information by the agency. Under the Paperwork Reduction Act (PRA) of 1995, Federal agencies are required to publish notice in the **Federal Register** concerning each proposed collection of information, including each proposed new collection, and allow 60 days for public comment in response to the notice. This notice solicits comments for information needed to indicate disagreement with a decision issues by a Regional Office.

DATES: Written comments and recommendations on the proposed collection of information should be received on or before September 17, 2012.

ADDRESSES: Submit written comments on the collection of information through Federal Docket Management System (FDMS) at *www.Regulations.gov* or to Nancy J. Kessinger, Veterans Benefits Administration (20M33), Department of Veterans Affairs, 810 Vermont Avenue NW, Washington, DC 20420 or email to *nancy.kessinger@va.gov.* Please refer to ''OMB Control No. 2900–NEW 21–0958'' in any correspondence. During the comment period, comments may be viewed online through FDMS.

FOR FURTHER INFORMATION CONTACT: Nancy J. Kessinger at (202) 632–8924 or Fax (202) 275–5947.

SUPPLEMENTARY INFORMATION: Under the PRA of 1995 (Pub. L. 104–13; 44 U.S.C. 3501–3521), Federal agencies must obtain approval from the Office of Management and Budget (OMB) for each collection of information they conduct or sponsor. This request for comment is being made pursuant to Section 3506(c)(2)(A) of the PRA.

With respect to the following collection of information, VBA invites comments on: (1) Whether the proposed collection of information is necessary for the proper performance of VBA's functions, including whether the information will have practical utility; (2) the accuracy of VBA's estimate of the burden of the proposed collection of information; (3) ways to enhance the quality, utility, and clarity of the information to be collected; and (4) ways to minimize the burden of the collection of information on respondents, including through the use of automated collection techniques or the use of other forms of information technology.

Title: Notice of Disagreement, VA Form 21–0958.

OMB Control Number: 2900–NEW.

Type of Review: New data collection.

Abstract: Veterans complete VA Form 21–0958 to indicate disagreement with a decision issued by Regional Office. This is the first step in the appeal process. The respondent may or may not continue with an appeal to the Board of Veterans Appeals (BVA). If the Veteran opts to continue to BVA for an appeal, this form will be included in the claim folder as evidence.

Affected Public: Individuals or households.

Estimated Annual Burden: 65,000 hours.

Estimated Average Burden per Respondent: 30 minutes.

Frequency of Response: One-time.

Estimated Number of Respondents: 130,000.

Dated: July 13, 2012.

By direction of the Secretary.

Denise McLamb,

Program Analyst, Enterprise Records Service.

[FR Doc. 2012–17505 Filed 7–18–12; 8:45 am]

BILLING CODE 8320–01–P

DEPARTMENT OF VETERANS AFFAIRS

[OMB Control No. 2900–0739]

Proposed Information Collection (Access to Financial Records) Activity: Comment Request

AGENCY: Veterans Benefits Administration, Department of Veterans Affairs.

ACTION: Notice.

SUMMARY: The Veterans Benefits Administration (VBA), Department of Veterans Affairs (VA), is announcing an opportunity for public comment on the proposed collection of certain information by the agency. Under the Paperwork Reduction Act (PRA) of 1995, Federal agencies are required to publish notice in the **Federal Register** concerning each proposed collection of information, including each proposed extension of a currently approved collection, and allow 60 days for public comment in response to the notice. This notice solicits comments for information needed to request the addresses of beneficiaries whose VA payments are deposited into financial institutions.

DATES: Written comments and recommendations on the proposed collection of information should be received on or before *September 17, 2012.*

ADDRESSES: Submit written comments on the collection of information through Federal Docket Management System (FDMS) at *www.Regulations.gov* or to Nancy J. Kessinger, Veterans Benefits Administration (20M33), Department of Veterans Affairs, 810 Vermont Avenue NW., Washington, DC 20420 or email to *nancy.kessinger@va.gov.* Please refer to ''OMB Control No. 2900–0739'' in any correspondence. During the comment period, comments may be viewed online through FDMS.

FOR FURTHER INFORMATION CONTACT: Nancy J. Kessinger at (202) 632–8924 or Fax (202) 275–5947.

SUPPLEMENTARY INFORMATION: Under the PRA of 1995 (Pub. L. 104–13; 44 U.S.C. 3501–3521), Federal agencies must obtain approval from the Office of Management and Budget (OMB) for each collection of information they conduct or sponsor. This request for comment is being made pursuant to Section 3506(c)(2)(A) of the PRA.

With respect to the following collection of information, VBA invites comments on: (1) Whether the proposed collection of information is necessary for the proper performance of VBA's functions, including whether the information will have practical utility; (2) the accuracy of VBA's estimate of the burden of the proposed collection of information; (3) ways to enhance the quality, utility, and clarity of the information to be collected; and (4) ways to minimize the burden of the collection of information on respondents, including through the use of automated collection techniques or the use of other forms of information technology.

Title: Access to Financial Records, 38 CFR 3.115.

OMB Control Number: 2900–0739.

Type of Review: Extension of a currently approved collection.

Abstract: Under 38 CFR. 3.115, VA is authorized to request access to financial records to obtain a current address of beneficiaries from financial institutions in receipt of a VA direct deposit payment. VA will only request the current address for beneficiaries whose mail was returned to the VA.

Affected Public: Business or Other for-Profit.

Estimated Annual Burden: 4,167 hours.

Estimated Average Burden per Respondent: 5 minutes.

Frequency of Response: On occasion.

Estimated Number of Respondents: 50,000.

Dated: July 13, 2012.

By direction of the Secretary.

Denise McLamb,

Program Analyst, Enterprise Records Service.

[FR Doc. 2012–17509 Filed 7–18–12; 8:45 am]

BILLING CODE 8320–01–P

FEDERAL REGISTER

Vol. 77 Thursday,

No. 139 July 19, 2012

Part II

Commodity Futures Trading Commission

17 CFR Part 39

End-User Exception to the Clearing Requirement for Swaps; Final Rule

COMMODITY FUTURES TRADING COMMISSION

17 CFR Part 39

RIN 3038–AD10

End-User Exception to the Clearing Requirement for Swaps

AGENCY: Commodity Futures Trading Commission.

ACTION: Final rule.

SUMMARY: The Commodity Futures Trading Commission (Commission or CFTC) is adopting final regulations to implement certain provisions of the Dodd-Frank Wall Street Reform and Consumer Protection Act (Dodd-Frank Act). These regulations govern the exception to the clearing requirement available to swap counterparties meeting certain conditions under the Commodity Exchange Act (CEA), as amended by the Dodd-Frank Act.

DATES: Effective September 17, 2012.

FOR FURTHER INFORMATION CONTACT: Erik F. Remmler, Associate Director, 202–418–7630, *eremmler@cftc.gov;* or Eileen A. Donovan, Associate Director, 202–418–5096, *edonovan@cftc.gov,* Division of Clearing and Risk, Commodity Futures Trading Commission, Three Lafayette Centre, 1155 21st Street NW., Washington, DC 20581.

SUPPLEMENTARY INFORMATION:

I. Background

The CEA, as amended by Title VII of the Dodd-Frank Act, establishes a comprehensive new regulatory framework for swaps. The CEA requires a swap: (1) To be cleared through a derivatives clearing organization (DCO) if the Commission has determined that the swap is required to be cleared, unless an exception to the clearing requirement applies; (2) to be reported to a swap data repository (SDR) or the Commission; and (3) if the swap is subject to a clearing requirement, to be executed on a designated contract market (DCM) or swap execution facility (SEF), unless no DCM or SEF has made the swap available to trade.

Section 2(h)(1)(A) of the CEA establishes a clearing requirement for swaps, providing that ''it shall be unlawful for any person to engage in a swap unless that person submits such swap for clearing to a [DCO] that is registered under [the CEA] or a [DCO] that is exempt from registration under [the CEA] if the swap is required to be cleared.'' [1] However, Section 2(h)(7)(A) of the CEA provides that the clearing requirement of Section 2(h)(1)(A) shall not apply to a swap if one of the counterparties to the swap: ''(i) Is not a financial entity; (ii) is using swaps to hedge or mitigate commercial risk; and (iii) notifies the Commission, in a manner set forth by the Commission, how it generally meets its financial obligations associated with entering into non-cleared swaps'' (referred to hereinafter as the ''end-user exception'').[2] The Commission is adopting § 39.6 herein to implement certain provisions of Section 2(h)(7). Accordingly, any swap that is required to be cleared by the Commission pursuant to Section 2(h)(2) of the CEA must be submitted to a DCO for clearing by the parties thereto unless the conditions of Section 2(h)(7)(A) and § 39.6 are satisfied.

Congress promulgated the end-user exception in Section 2h(7) of the CEA to permit non-financial companies to continue using non-cleared swaps to hedge risks associated with their underlying business, such as manufacturing, energy exploration, farming, transportation, or other commercial activities. Additionally, Section 2(h)(7)(F) gives the Commission the authority to prescribe rules (or interpretations of such rules) that may be necessary to prevent abuse of the end-user exception, and Section 2(h)(4)(A) requires the Commission to prescribe rules as determined by the Commission to be necessary to prevent evasions of the clearing requirement.[3]

Regulation 39.6 implements Section 2(h)(7) of the CEA by: (1) Establishing the criteria for determining whether a swap hedges or mitigates commercial risk for purposes of Section 2(h)(7)(A)(ii); (2) specifying the information that counterparties must report to satisfy the notification requirement of Section 2(h)(7)(A)(iii); and (3) establishing an exemption for small financial institutions pursuant to Section 2(h)(7)(C)(ii) of the CEA. The rule also requires reporting of certain information that the Commission will use to monitor compliance with, and prevent abuse or evasion of, the end-user exception.

On December 23, 2010, the Commission published for public comment a notice of proposed rulemaking (NPRM) for § 39.6.[4] The Commission received approximately 2,000 comment letters, approximately 1,650 of which were form letters (cited herein as ''Form Letters''), and Commission staff participated in approximately 30 *ex parte* meetings and teleconferences concerning the rulemaking.[5] The Commission considered each of these comments in formulating the final regulations, as discussed below.[6]

II. Comments on the Notice of Proposed Rulemaking

A. Scope of the End-User Exception

As proposed, § 39.6(a) would provide that a counterparty to a swap (an ''electing counterparty'') may elect the end-user exception to the clearing requirement provided in Section 2(h)(7)(A) of the CEA (*i.e.,* the end-user exception) if the electing counterparty: (1) Is not a ''financial entity'' as defined in Section 2(h)(7)(C)(i) of the CEA; (2) is using the swap to hedge or mitigate commercial risk as defined in § 39.6(c); and (3) provides or causes to be provided to a SDR or, if no SDR is available, the Commission, the information specified in proposed § 39.6(b).

1. General Scope of Regulation 39.6(a)

The Commission received a number of comments regarding the general scope of § 39.6(a). Commodity Markets Council (CMC) and Riverside Risk Advisors, LLC (Riverside) recommended that the end-user exception should be available to a wide variety of entities. According to CMC, many market participants rely on customized over-the-counter swaps because they have small volume transactions or there are no standardized contracts available to hedge their specific commercial risks. Riverside requested that the Commission allow all potential counterparties other than swap dealers or major swap participants (MSPs) to elect the end-user exception.

In contrast, Idaho Petroleum Marketers & Convenience Store Association (IPM&CSA) stated that the end-user exception should be narrowly tailored to businesses that produce, refine, process, market, or consume underlying commodities and to counterparties transacting with non-financial counterparties. The Form Letters generally agreed with the scope of the proposed rule's exception from

[1] *See* Section 2(h)(1)(A) of the CEA, 7 U.S.C. 2(h)(1)(A).

[2] *See* Section 2(h)(7)(A) of the CEA, 7 U.S.C. 2(h)(7)(A).

[3] 7 U.S.C. 2(h)(7)(F) and 7 U.S.C. 2(h)(4)(A).

[4] *See* 75 FR 80747 (Dec. 23, 2010).

[5] The comment file for the proposed rulemaking can be found on the Commission Web site, *www.cftc.gov.*

[6] The Commission notes that the Securities and Exchange Commission has proposed regulations concerning an exception for end-users from clearing requirements applicable to security-based swaps. *See* 75 FR 79992 (Dec. 21, 2010). The Commission has reviewed the SEC's proposal and consulted with SEC staff regarding the SEC's proposal and this final rulemaking.

clearing for non-financial companies engaging in commercial hedging and expressed concern with broadening the rule to include financial institutions or non-commercial hedges.[7]

In response to the comments from CMC and Riverside seeking a broader end-user exception, the Commission notes that the exception to the clearing requirement provided by Section 2(h)(7)(A) is based on the type of counterparty (*e.g.,* the electing counterparty must not be a financial entity) and the type of risk hedged or mitigated (commercial risk). The Commission believes the general scope of the rule provides an appropriately flexible exception to the clearing requirement for commercial entities within the limits of these two parameters established in the CEA. In response to Riverside's other comment, the Commission notes that Congress specifically required all financial entities as defined in Section 2(h)(7)(C) (with certain exceptions specifically identified in that section) to submit for clearing swaps that are subject to the clearing requirement. Therefore, the Commission is adopting § 39.6(a) largely as proposed, except for changes to clarify the rule language and to make it consistent with other provisions of the rule as finalized.

2. Application of the End-User Exception to Certain Entities

The Commission received a number of specific requests from commenters that the Commission determine that certain entities, or types of entities, are able to elect the end-user exception.[8] The commenters asked for relief in one of two ways: (i) That the Commission provide an express exemption from the clearing requirement for such entity; or (ii) that the Commission determine that the specific entity in question is not a financial entity and is hedging commercial risk.

Regulation 39.6(a), as adopted, sets forth the basic conditions that an entity must satisfy to elect the end-user exception. Except with respect to foreign governments, foreign central banks, international financial institutions, and state and local government entities as discussed below, the Commission is declining to determine at this time whether certain specific entities, or types of entities, are exempt from the clearing requirement or would qualify for the end-user exception based on their specific circumstances.[9] This release addresses comments and questions that are generally applicable to the rule. Any exemptive or interpretive determinations based on the specific nature or circumstances of a particular entity can better be addressed on a case-by-case basis, with the benefit of all relevant facts and circumstances, through the interpretive or exemptive relief processes available for such purposes under the CEA and the Commission's regulations.

3. Definition of ''Financial Entity'' and ''Financial Institution'' for Purposes of FDICIA

The International Energy Credit Association (IECA) requested that the Commission clarify the meaning of ''financial entity'' in the regulation. According to IECA, because of the implications of being labeled a ''financial entity'' under the Dodd-Frank Act, an entity may be reluctant to represent that it is a ''financial institution'' for purposes of the Federal Deposit Insurance Corporation Improvement Act (FDICIA).[10] IECA recommended that proposed § 39.6(a) be revised in part to state that a counterparty may elect the end-user exception if the electing counterparty (new language emphasized): ''Is not a 'financial entity' as defined in section 2(h)(7)(C)(i) of the Act *(determined without regard to whether such entity believes itself to be, or in fact constitutes, a 'financial institution' within the meaning of FDICIA).*''

The Commission declines to revise proposed § 39.6(a) as requested by IECA because ''financial entity'' and ''financial institution'' are different terms referenced in different statutes. Interpreting the meaning and use of ''financial institution'' under FDICIA is within the jurisdiction of the Federal Deposit Insurance Corporation. Accordingly, the Commission is not inclined to render a view on the meaning of that term.

4. Status of Foreign Governments, Foreign Central Banks, and International Financial Institutions as ''Financial Entities''

The Commission received a comment from Milbank, Tweed, Hadley & McCloy LLP (Milbank) recommending that foreign governments and their agencies be excluded from the definition of ''financial entity.'' Milbank cited central banks, treasury ministries, export agencies, and housing finance authorities as examples of agencies of foreign governments that could be affected. Milbank expressed concern that these entities might be treated as ''financial entities'' that would not be permitted to use the end-user exception if, for example, they are viewed as ''predominately engaged in * * * activities that are financial in nature, as defined by Section 4(k) of the Bank Holding Company Act of 1956.''[11] In a separate letter, the World Bank commented that it should not be subject to the clearing requirement under Section 2(h)(1) of the CEA.

The Commission recognizes that there are important public policy implications related to the application of the end-user exception, and the clearing requirement generally, to foreign governments,[12] foreign central banks,[13] and international financial institutions.[14] The Commission expects

[7] The Form Letters stated:

''The big banks and their allies * * * are calling for exemptions for a very broad array of companies from the clearing and margin requirements of the act. Dodd-Frank already contains an exception for legitimate end-users, such as airlines and farmers, who are doing commercial hedging as part of their business from clearing and exchange trading requirements. We must not broaden this narrow, commonsense exception to include financial and commercial institutions that want to gamble in the derivatives markets. Doing so would allow systemically important companies to enter into risky trades in a market with zero transparency and accountability.''

[8] *See, e.g.,* American Securitization Forum (ASF), American Public Gas Association (APGA), National Rural Utilities Cooperative Finance Corp. (CFC), Coalition of Physical Energy Companies (COPE), Dairy Farmers of America (DFA), EDF Trading North America, LLC (EDF Trading), Farm Credit Council (FCC), Garkane Energy Cooperative (Garkane), Government Finance Officers Association (GFOA), Kraft Foods, Inc. (Kraft), National Association of Regulatory Utility Commissioners (NARUC), National Council of State Housing Agencies (NCSHA), Not for Profit Electricity End-Users (NFPEEU), National Milk Producers Foundation (NMPF), and Pacific Gas and Electric Co. (PG&E).

[9] An exemption for small financial institutions from the definition of ''financial entity,'' which Congress directed the Commission to consider in Section 2(h)(7)(C)(ii) of the CEA, is addressed in section II.D hereof.

[10] Public Law 102–242, 105 Stat. 2236 (1991).

[11] 12 U.S.C. 1841 *et seq.*

[12] For this purpose, the Commission considers that the term ''foreign government'' includes KfW, which is a non-profit, public sector entity responsible to and owned by the federal and state authorities in Germany, mandated to serve a public purpose, and backed by an explicit, full statutory guarantee provided by the German federal government.

[13] For this purpose, the Commission considers the Bank for International Settlements, in which the Federal Reserve and foreign central banks are members, to be a foreign central bank. *See http://www.bis.org/about/orggov.htm.*

[14] For this purpose, the Commission considers the ''international financial institutions'' to be those institutions defined as such in 22 U.S.C. 262r(c)(2) and the institutions defined as ''multilateral development banks'' in the Proposal for the Regulation of the European Parliament and of the Council on OTC Derivative Transactions, Central Counterparties and Trade Repositories, Council of the European Union Final Compromise Text, Article 1(4a(a)) (March 19, 2012). There is overlap between the two definitions, but together they include the following institutions: The International

Continued

that if any of the Federal Government, Federal Reserve Banks, or international financial institutions of which the United States is a member were to engage in swap transactions in foreign jurisdictions, the actions of those entities with respect to those transactions would not be subject to foreign regulation. However, if foreign governments, foreign central banks, or international financial institutions were subjected to regulation by the Commission in connection with their swap transactions, foreign regulators could treat the Federal Government, Federal Reserve Banks, or international financial institutions of which the United States is a member in a similar manner. The Commission notes that the Federal Reserve Banks and the Federal Government are not subject to the clearing requirement under the Dodd-Frank Act.

Canons of statutory construction ''assume that legislators take account of the legitimate sovereign interests of other nations when they write American laws.'' [15] In addition, international financial institutions operate with the benefit of certain privileges and immunities under U.S. law indicating that such entities may be viewed similarly under certain circumstances.[16] There is nothing in the text or history of the swap-related provisions of Title VII of the Dodd-Frank Act to establish that Congress intended to deviate from these traditions of the international system by subjecting foreign governments, foreign central banks, or international financial institutions to the clearing requirement set forth in Section 2(h)(1) of the CEA.[17]

Given these considerations of comity and in keeping with the traditions of the international system, the Commission believes that foreign governments, foreign central banks, and international financial institutions should not be subject to Section 2(h)(1) of the CEA.[18] Accordingly, it is not necessary to determine whether these entities are ''financial entities'' under Section 2(h)(7) of the CEA.

The Commission notes, however, that if a foreign government, foreign central bank, or international financial institution enters into a non-cleared swap with a counterparty who is subject to the CEA and Commission regulations with regard to that transaction, then the counterparty still must comply with the CEA and Commission regulations as they pertain to non-cleared swaps. For example, the party must comply with the recordkeeping and reporting requirements under Parts 23 and 45 of the Commission's regulations.

5. Status of State and Local Government Entities as ''Financial Entities''

NCSHA recommended that the Commission explicitly provide that state and local governmental entities, specifically housing finance agencies, are not ''financial entities'' as defined in Section 2(h)(7) of CEA. In particular, NCSHA expressed concern regarding the applicability of Section 2(h)(7)(C)(VIII), which provides that a person is a financial entity if the person is ''predominantly engaged in activities that are in the business of banking, or in activities that are financial in nature, as defined in section 4(k) of the Bank Holding Company Act of 1956.''

As an initial matter, the Commission notes that Congress did not expressly exclude state and local government entities from the ''financial entity'' definition. On the contrary, in Section 2(h)(7)(C)(VII), Congress expressly included employee benefit plans of state and local governments in the ''financial entity'' definition, thereby prohibiting them from using the end-user exception.[19] A per se exclusion for state and local government entities from the ''financial entity'' definition is inappropriate. A state or local government entity's swap activity may be commercial in nature and such entity may also meet the definition of a ''financial entity'' in Section 2(h)(7)(C) of the CEA. Under such circumstances, the entity would be subject to compliance with the clearing requirement of Section 2(h)(1)(A). As an example, much like state and local government employee benefit plans that are expressly identified in Section 2(h)(7)(C) as financial entities, other state or local government entities that act in the market in the same manner as private asset managers, such as local government investment pools, would need to comply.

The ''business of banking'' is a term of art found in the National Bank Act [20] and is within the jurisdiction of, and therefore subject to interpretation by, the Office of the Comptroller of the

Monetary Fund, International Bank for Reconstruction and Development, European Bank for Reconstruction and Development, International Development Association, International Finance Corporation, Multilateral Investment Guarantee Agency, African Development Bank, African Development Fund, Asian Development Bank, Inter-American Development Bank, Bank for Economic Cooperation and Development in the Middle East and North Africa, Inter-American Investment Corporation, Council of Europe Development Bank, Nordic Investment Bank, Caribbean Development Bank, European Investment Bank and European Investment Fund. (The International Bank for Reconstruction and Development, the International Finance Corporation and the Multilateral Investment Guarantee Agency are parts of the World Bank Group.)

[15] *See F. Hoffman-LaRoche, Ltd.* v. *Empagran S.A.,* 542 U.S. 155, 164 (2004), *citing Murray* v. *Schooner Charming Betsy,* 2 Cranch 64, 118, 2 L.Ed. 208 (1804) (''[A]n act of congress ought never to be construed to violate the law of nations if any other possible construction remains''); *Hartford Fire Insurance Co.* v. *California,* 509 U.S. 764 (1993) (Scalia, J., dissenting). *See also* Restatement (Third) Foreign Relations Law § 403 (scope of a statutory grant of authority must be construed in the context of international law and comity including, as appropriate, the extent to which regulation is consistent with the traditions of the international system).

[16] *See, e.g.,* the International Organization and Immunities Act (22 U.S.C. 288) and the Foreign Sovereign Immunities Act (28 U.S.C. 1602). The United States has taken appropriate actions to implement international obligations with respect to such immunities and privileges. *See, e.g.,* International Bank for Reconstruction and Development (the ''World Bank'') and International Monetary Fund (22 U.S.C. § 286g and 22 U.S.C. 286h), the European Bank for Reconstruction and Development (22 U.S.C. 290l–6), the Multilateral Investment Guarantee Agency (22 U.S.C. 290k–10), the Africa Development Bank (22 U.S.C. 290i–8), the African Development Fund (22 U.S.C. 290g–7), the Asian Development Bank (22 U.S.C. 285g), the Inter-American Development Bank (22 U.S.C. 283g), the Bank for Economic Cooperation and Development in the Middle East and North Africa (22 U.S.C. 290o), and the Inter-American Investment Corporation (22 U.S.C. 283hh). *See, e.g.,* CFTC *Interpretative Letter regarding World Bank Group, dated* October 30, 1991. ''Based on the unique attributes and status of the World Bank Group as a multinational member agency, * * * the CFTC believes that the World Bank Group need not be treated as a U.S. person for purposes of application of the CFTC's Part 30 rules.'' *See, also e.g.,* Board of Governors of the Federal Reserve approval of the application of BCI to acquire LITCO Bancorporation of New York, Inc., 68 Federal Reserve Bulletin 423 (1982) (the Bank Holding Company Act does not apply to foreign governments because they are not ''companies'' as such term is defined in the Bank Holding Company Act).

[17] To the contrary, Section 752(a) of the Dodd-Frank Act directs the Commission to consult and coordinate with other regulators ''on the establishment of consistent international standards with respect to the regulation (including fees) of swaps [and] swap entities. * * *''

[18] The foregoing rationale and considerations do not, however, extend to sovereign wealth funds or similar entities due to the predominantly commercial nature of their activities. Accordingly, the Commission clarifies that sovereign wealth funds and similar entities are subject to Section 2(h)(1) of the CEA.

[19] The Commission is not convinced by NCHSA's suggestion that Congress would have expressly included in the definition housing finance entities and other state and local government entities if it had intended for them to be ''financial entities.'' Congress did not list every type of entity that is a financial entity, but provided a catch-all definition in Section 2(h)(7)(C)(VIII) to capture various types of entities it did not specifically list. The reference to government employee benefit plans is part of Section 2(h)(7)(C)(VII), which includes various types of employee benefit plans specifically in the definition of ''financial entity,'' does not appear to have been intended as a singular identification of the only type of governmental entity that could be captured by the definition of ''financial entity.''

[20] 12 U.S.C. 24 (Seventh).

Currency.[21] Similarly, Section 4(k) of the Bank Holding Company Act is within the jurisdiction of, and therefore subject to interpretation by, the Board of Governors of the Federal Reserve System. Accordingly, the Commission is not inclined to interpret these provisions. However, even assuming that many state and local government entities may engage in some limited activities that are in the business of banking or are financial in nature as defined by Section 4(k), such activities are likely to be incidental, not primary, activities of those entities. Therefore, most state and local government entities are not likely to be ''financial entities'' under Section 2(h)(7)(C)(VIII), because they are not predominantly engaged in activities that are in the business of banking, or are financial in nature, as defined by Section 4(k) of the Bank Holding Company Act of 1956. Instead, most state and local government entities are ''predominantly engaged'' in other, non-banking and non-financial, activities related to their core public purposes and functions. Such entities therefore would not be ''financial entities'' by virtue of Section 2(h)(7)(C)(VIII) of the CEA.

Regarding NCHSA's request for a specific determination for housing finance agencies, the Commission is not inclined to make such a determination without the opportunity to consider all relevant facts and circumstances.

6. Affiliates

Section 2(h)(7)(D)(i) of the CEA provides that an affiliate of a person that qualifies for the end-user exception (including affiliate entities predominantly engaged in providing financing for the purchase of the merchandise or manufactured goods of the person) may qualify for the exception only if the affiliate, acting on behalf of the person and as an agent, uses the swap to hedge or mitigate the commercial risk of the person or other affiliate of the person that is not a financial entity. The clear implication of this provision is that such an affiliate may elect the end-user exception, even if it is a financial entity, if the swap and the affiliate relationship otherwise comply with the requirements of Section 2(h)(7) and in particular, Section 2(h)(7)(D). Section 2(h)(7)(D)(ii), however, provides that this affiliate exception shall not apply to certain types of entities including, among others, swap dealers or MSPs.

Shell Energy North America (US), L.P. (Shell) commented that, absent clear guidance by the Commission, potential electing counterparties that centralize their risk management through a hedging affiliate that is designated as a swap dealer or MSP may be unable to benefit from the end-user exception. As a result, many potential electing counterparties may need to restructure their businesses and risk management techniques, thereby losing the many benefits of centralized hedging. According to Shell, such a loss might require potential electing counterparties to take on additional risk or to transact with third parties.

In response, the Commission notes that it lacks discretion in this regard because Congress specifically defined financial entities (which cannot use the end-user exception) to include swap dealers and MSPs, and Section 2(h)(7)(D) specifically prohibits swap dealers or MSPs acting on behalf of affiliates from using that provision to elect the end-user exception.[22]

Similarly, Kraft, Philip Morris International, Inc. (Philip Morris), and Siemens Corp. (Siemens) commented that the Commission should exclude wholly-owned treasury subsidiaries of non-financial companies from the ''financial entity'' definition, to the extent that they solely engage in swap transactions to hedge or mitigate the commercial risks of an entire corporate group. These commenters noted in particular that the treasury subsidiaries may be, or are likely to be, ''financial entities'' under Section 2(h)(7)(C)(VIII), because they are predominantly engaged in activities of a financial nature as defined in Section 4(k) of the Bank Holding Company Act. Siemens believes the Commission should amend the proposed rule to clarify that a financial entity acting as a ''Treasury Affiliate'' satisfies the statutory criteria for ''acting on behalf of the person and as an agent,'' as required by section 2(h)(7)(D)(i) of the CEA.

Here too, the Commission notes that Congress specifically defined ''financial entity'' for purposes of Section 2(h)(7) of the CEA, and proposed § 39.6(b)(2) (renumbered as § 39.6(a)(1)(i) in the final rule) simply adopts that definition. Likewise, Congress specifically set out in Section 2(h)(7)(D) who may qualify as an affiliate eligible for the end-user exception. The specificity with which Congress defines ''financial entity'' and sets out when affiliates, including affiliates that may be financial entities, may elect the end-user exception on behalf of an affiliate that is not a financial entity (*i.e.,* the treasury affiliate would need to be ''acting on behalf of the [other affiliate] and as agent''), constrains the Commission's discretion in this area.

However, the Commission notes that it is important to distinguish where the treasury function operates in the corporate structure. Treasury affiliates that are separate legal entities and whose sole or primary function is to undertake activities that are financial in nature as defined under Section 4(k) of the Bank Holding Company Act are financial entities as defined in Section 2(h)(7)(C)(VIII) of the CEA because they are ''predominantly engaged'' in such activities. If, on the other hand, the treasury function through which hedging or mitigating the commercial risks of an entire corporate group is undertaken by the parent or another corporate entity, and that parent or other entity is entering into swaps in its own name, then the application of the end-user exception to those swaps would be analyzed from the perspective of the parent or other corporate entity directly.

For example, consider a parent company or other corporate entity predominantly engaged in manufacturing, agriculture, retailing, energy, or other non-''financial entity'' businesses and which is not one of the types of financial entities described in Sections 2(h)(7)(C)(I) through (VII). If that parent or other corporate entity enters into swaps with an affiliate that hedge or mitigate commercial risk of the affiliate, the affiliate may elect the end-user exception for those inter-affiliate swaps if the affiliate is not a financial entity. If the parent or other corporate entity then aggregates the commercial risks of those swaps with other risks of the commercial enterprise and hedges the aggregated commercial risk using a swap with a swap dealer, that entity may, in its own right, elect the end-user exception for that hedging swap. The parent or other corporate entity in the example is not a ''financial entity'' as defined in Section 2(h)(7)(C)(VIII) of the CEA, because that entity is ''predominantly engaged'' in other, non-financial activities undertaken to fulfill its core commercial enterprise purpose. However, if the parent or other

[21] *Nationsbank of N.C., N.A.* v. *Variable Annuity Life Ins. Co.,* 513 U.S. 251, 258 & n.2 (1995).

[22] The Commission notes that the definition of ''major swap participant'' in Section 1a(33) of the CEA, in which the term ''financial entity'' is also used, does not include a provision that is similar to Section 2(h)(7)(D). In the absence of such a provision, the Commission has defined the term ''financial entity'' in § 1.3(mmm)(1) for purposes of the ''major swap participant'' definition in Section 1a(33) of the CEA and § 1.3(hhh), to exclude certain centralized hedging and treasury entities. *See* 77 FR 30596 at 30750 (May 23, 2012). The Commission does not believe it would be appropriate to take a similar approach with respect to the end-user exception, however, because Section 2(h)(7)(D) specifically addresses when affiliates may be eligible for the end-user exception.

corporate entity, including, for example, a separately incorporated treasury affiliate, is a ''financial entity,'' then that entity cannot elect the end-user exception unless one of the specific affiliate provisions of the statute, Section 2(h)(7)(C)(iii) or Section 2(h)(7)(D), apply.

CFC recommended that the Commission clarify that the definition of ''an affiliate of a person'' includes a nonprofit, tax-exempt cooperative of which the person is a member and which is not a depository institution. Section 2(h)(7)(D)(ii) of the CEA lists certain types of entities that do not qualify as affiliates able to elect the end-user exception. The Commission declines to determine at this time whether specific types of entities would qualify as affiliates able to elect the end-user exception because such determinations are best made on a case-by-case basis with the benefit of all relevant facts and circumstances.

Cravath, Swaine, and Moore, LLP (Cravath), EDF Trading, The Prudential Insurance Company of America (Prudential), and Working Group of Commercial Energy Firms (WGCEF) commented that the Commission should provide an explicit exemption from clearing and notification requirements for inter-affiliate swaps, *i.e.,* swaps between companies that are part of a single group of affiliated companies. EEI & EPSA recommended that the Commission clarify in the regulatory text that ''acting on behalf of the person and as an agent'' to hedge or mitigate commercial risk includes inter-affiliate transactions.

As a general matter, the Commission notes that Congress did not treat inter-affiliate swaps differently from other swaps in Section 2(h)(7) of the CEA. Accordingly, the fact that a swap is between two affiliates would not change the analysis of whether one of the parties to the swap can elect the end-user exception. If one of the affiliates is not a financial entity and is using the swap to hedge or mitigate commercial risk, even if the other affiliate is a financial entity, the non-financial entity affiliate may elect the end-user exception and neither affiliate needs to clear the swap. However, whether the Commission should provide general clearing relief for inter-affiliate swaps for which the statutory requirements of the end-user exception are not satisfied is outside the scope of this rulemaking. Notwithstanding the foregoing, the Commission acknowledges that commenters have raised issues regarding inter-affiliate swaps that warrant further review and the Commission is considering other options regarding these issues.

7. Captive Finance Companies

Section 2(h)(7)(C)(iii) of the CEA provides that the definition of ''financial entity'' in Section 2(h)(7)(C)(i) of the CEA ''shall not include an entity whose primary business is providing financing, and uses derivatives for the purpose of hedging underlying commercial risks related to interest rate and foreign currency exposures, 90 percent or more of which arise from financing that facilitates the purchase or lease of products, 90 percent or more of which are manufactured by the parent company or another subsidiary of the parent company.'' In connection with this ''captive finance company'' exception, the U.S. Chamber of Commerce and the Coalition for Derivatives End Users (CDEU) requested that the Commission interpret the phrase ''90 percent or more of which are manufactured by the parent company or another subsidiary of the parent company'' to include component parts, attachments, systems, and other products that may be manufactured by others, but sold together with the company's products as well as attachments and labor costs that are incidental to the primary purchase.

The Commission believes that the captive finance company exception must be interpreted in a manner consistent with the plain language of the statute. As a result, a person that seeks to fall within the captive finance company exception must be in the ''primary business'' of providing financing of purchases or leases from its parent company or subsidiaries thereof. Consistent with this requirement, the Commission states that the captive finance company exception can be applied when this financing activity finances the purchase or lease of products sold by the parent company or its subsidiaries in a broad sense, including service, labor, component parts, and attachments that are related to the products.

A group of captive finance companies or affiliates of captive finance companies (the ''Captive Finance Companies'')[23] asked the Commission to create a simple test to determine whether an entity qualifies for the captive finance company exception and to clarify whether the two ''90 percent'' prongs should be read separately or together. The Commission believes the test is set out plainly in the statute and only allows for limited interpretation. As to the two prongs, the Commission interprets them separately. That is, 90 percent or more of the interest rate and currency exposures for which the captive finance company is using derivatives to hedge the related underlying commercial risks must arise from financing that facilitates the purchase or lease of products. Ninety percent or more of the products, the purchase or sale of which are being facilitated by the financing, must be manufactured by the parent company or its subsidiary. An entity must satisfy both prongs in order to be eligible for the captive finance company exception.

The Captive Finance Companies expressed concern that the Commission would require a product, in order to qualify as ''manufactured'' by the parent company or a subsidiary, to have 90 percent or more of its components manufactured by the parent company or subsidiary. The Commission requires only that the final product being purchased or sold, regardless of its components, be manufactured by the parent company or subsidiary in order to qualify.

The Captive Finance Companies also asked the Commission whether the ''financing that facilitates the purchase or lease of products'' should be measured on a single-entity or consolidated basis that includes the entity's consolidated subsidiaries. They recommended that it be measured on a consolidated basis to prevent an entity that is a part of a larger group of entities from using corporate structures to manipulate the outcome and because most entities manage the reporting of their finance and leasing portfolios on that basis. The Commission agrees that the financing should be measured on a consolidated basis.

Further, the Captive Finance Companies discussed the ways in which a captive finance company might ''facilitate'' the purchase or lease of the parent company's and subsidiaries' products. For example, a captive finance company for an engine manufacturer may finance the sale of a boat that includes the manufacturer's engine in order to facilitate the sale of the engine, even if the boat itself were manufactured by a different company. As a second example, a captive finance company may provide working capital and related financing to a dealer that sells the parent company's products, even though such financing is not directly related to the sale of products. The Commission agrees that the word ''facilitates'' as used in Section 2(h)(7)(C)(iii) should be interpreted

[23] American Honda Finance Corp., John Deere Financial Services, Inc., Nissan North America, Inc., Toyota Financial Services, and Caterpillar Financial Services Corp.

broadly to include financing that may indirectly help to facilitate the purchase or lease of products.

CFC commented that it should be viewed as a captive finance subsidiary of the entities that own it in a cooperative structure. CFC also discussed whether the captive finance company exception should be available when it provides financing to its member-owners to support their general business activities, rather than to finance purchases from its member-owners. The Commission is declining to determine at this time whether specific entities would qualify for the captive finance company exception because such determinations are best made on a case-by-case basis with the benefit of all relevant facts and circumstances.

B. Reporting Requirements

Section 2(h)(7)(A)(iii) of the CEA requires that, for the end-user exception to apply, one of the counterparties to the swap must notify ''the Commission in a manner set forth by the Commission how it generally meets its financial obligations associated with entering into non-cleared swaps.'' Section 2(h)(7)(F) of the CEA allows the Commission to ''prescribe such rules or issue interpretations of the rules as the Commission determines to be necessary to prevent abuse'' of the end-user exception and to ''request information from those persons claiming the clearing exception as necessary to prevent abuse.'' [24]

Proposed § 39.6(b) would implement Section 2(h)(7)(A)(iii) by requiring one of the counterparties (the ''reporting counterparty'') to provide, or cause to be provided, to a registered SDR, or if no registered SDR is available, to the Commission, information about how the electing counterparty generally expects to meet its financial obligations associated with the non-cleared swap. In addition, proposed § 39.6(b) would require the reporting counterparty to provide certain information that the Commission will use to monitor compliance with, and prevent abuse of, the end-user exception. The reporting counterparty would be required to provide the information at the time the electing counterparty elects the end-user exception.

1. Frequency of Reporting

The Commission received numerous comments suggesting that reporting of the information specified under proposed § 39.6(b) for each swap transaction would be burdensome.[25] A number of commenters recommended that the Commission permit entities to report some or all of the required items on an annual or periodic basis with updates for any material changes.[26] According to these commenters, an annual or periodic filing would provide sufficient notice to the Commission because the reasons for which each entity enters into hedge transactions, and the manner in which each entity generally meets its financial obligations associated with those transactions, do not change materially on a frequent basis.[27] Several commenters believe that a one-time filing of some or all of the required items should suffice.[28]

Hess suggested that, instead of imposing additional reporting requirements, the Commission could prevent abuse of the end-user exception by requiring electing counterparties to represent that they satisfy the requirements of Sections 2(h)(7) and 2(j) of the CEA in swap contracts that they elect not to clear. EEI & EPSA also recommended that if the Commission were to require swap-by-swap reporting, it should adopt a flexible requirement that establishes reasonable time frames for reporting. ATA recommended that the Commission streamline the notice requirement by providing that notice may be satisfied on a one-time basis as part of the ISDA master agreement.

IECA recommended that the rule be revised to state that if more than one, but less than all, parties to a swap are electing counterparties, the information specified in proposed § 39.6(b) shall be provided with respect to each of the electing counterparties. According to IECA, if all parties to a swap are electing counterparties, no report should be required.

NMPF requested that the Commission simplify the reporting requirements, especially for those smaller hedgers for whom the typical reporting requirements would be burdensome, and exempt agricultural swaps between non-financial counterparties from all or most reporting requirements. Federal Home Loan Banks (FHL Banks) commented that certain non-financial entities should have no reporting obligation.

As proposed, the swap-by-swap reporting frequency for all information to be reported may impose unnecessary burdens, and therefore the Commission is revising proposed § 39.6(b) to require only swap-by-swap reporting of the election of the end-user exception and the identity of the electing counterparty to the swap. The other information for which proposed § 39.6(b) would have required reporting on a swap-by-swap basis does not have to be reported for each swap if the electing counterparty has previously provided the information in an annual filing.

In practice, the reporting counterparty will be required to check at least three boxes for each swap for which the end-user exception is elected, indicating: (1) The election of the exception; (2) which party is the electing counterparty; and (3) whether the electing counterparty has already provided the additional required information through an annual filing. If the third box is checked ''no,'' the reporting counterparty will have to provide the additional required information for that swap. The Commission is requiring certain information on a swap-by-swap basis so it can verify that the end-user exception is being elected in compliance with the CEA and Commission regulations.[29] In addition, if a counterparty is eligible to claim the end-user exception for one asset class but not another (for example, if the counterparty is a swap dealer granted limited designation by the Commission pursuant to § 1.3(ggg)(3)), the Commission must be able to distinguish those swaps for which the counterparty may legitimately claim the end-user exception from those for which it cannot. The Commission does not believe this reporting requirement will impose a significant burden on parties because other detailed information for every swap must be reported under

[24] In addition, Section 2(h)(4)(A) requires the Commission to prescribe rules as determined by the Commission to be necessary to prevent evasion of the clearing requirements.

[25] *See, e.g.,* American Bankers Association (ABA), American Gas Association (AGA), APGA, American Petroleum Institute (API), Air Transport Association (ATA), CDEU, COPE, Cravath, EDF Trading, Edison Electric Institute (EEI), EEI and Electric Power Supply Association (EEI & EPSA), Encana Marketing (USA) Inc. (EMUS), IECA, Independent Petroleum Association (IPA), National Council of Farmer Cooperatives (NCFC), NCSHA, National Energy Marketers Association (NEMA), Natural Gas Supply Association (NGSA), NMPF, Noble Energy, Inc. (Noble), National Rural Electric Cooperative Association (NRECA), Peabody Energy Corp. (Peabody), Retail Energy Supply Association (RESA), San Diego Gas and Electric Co. (SDG&E), Shell, Swap Financial Group, LLC (SFG), WGCEF, and WSPP, Inc. (WSPP).

[26] *See, e.g.,* ABA, AGA, API, ATA, CDEU, CFI Industries, Inc. (CFI), Hess Corp. (Hess), NCFC, NCSHA, NFPEEU, Noble, Peabody, SDG&E, Shell, and WGCEF.

[27] *Id.*

[28] *See, e.g.,* APGA, COPE, Cravath, EDF Trading, EEI & EPSA, EMUS, Hess, IECA, IPA, NCSHA, NMPF, Petroleum Marketers Association of America and New England Fuel Institute (PMAA & NEFI), RESA, and SFG.

[29] The Commission's Part 43 rules on real-time public reporting of swap transaction data also require the reporting counterparty to indicate election of the end-user exception on a swap-by-swap basis. *See* 77 FR 1182 at 1250 (Jan. 9, 2012). Indication of the election of the end-user exception will be publicly disseminated as required in Part 43, but the additional information required under § 39.6(b) will not be.

other provisions of the CEA and Commission regulations.[30]

The Commission agrees with commenters that an annual filing for the remaining information will provide sufficient notice to the Commission because the general reasons for which electing counterparties enter into hedge transactions, and the manner in which they generally meet their financial obligations for those transactions, do not change frequently. While this approach may impose additional costs on SDRs and the Commission because each will have to establish and maintain two reporting alternatives,[31] the Commission believes that this approach will impose lower costs on the swap parties than they would incur if all information were required to be reported on a swap-by-swap basis. Accordingly, § 39.6(b) is being revised to permit the following information to be reported on a swap-by-swap or an annual basis: (1) Whether the electing counterparty is a financial entity or a finance affiliate (*i.e.,* is a financial entity electing the end-user exception by virtue of Sections 2(h)(7)(C)(ii) or (iii) or 2(h)(7)(D) of the CEA); (2) whether the swap hedges or mitigates commercial risk (the annual filing will state that the electing counterparty will only elect the end-user exception for swaps that hedge or mitigate commercial risk); (3) how the electing counterparty generally expects to meet its financial obligations; and (4) information related to whether the electing counterparty is an issuer of securities with board approval to not clear the swaps for which the end-user exception is elected.

The Commission has determined not to grant any exemptions to the § 39.6(b) reporting requirements at this time because any such determinations require a consideration of all relevant facts and circumstances. The modified reporting requirements should reduce some of the burdens cited by the commenters and given the low reporting burden under the rule and the general swap-by-swap reporting requirements in other regulations (*e.g.,* Part 45), the Commission does not believe that a special, lesser reporting requirement for smaller parties or certain types of swaps is consistent with the statute. The Commission believes it would not be appropriate to require contract representations instead of reporting, or eliminate all or some reporting requirements for certain types of electing counterparties, because Section 2(h)(7)(A)(iii) of the CEA specifically requires notification to the Commission. Finally, the information required under § 39.6(b) will help to prevent abuse of the end-user exception by allowing the Commission to track when the exception is elected and who is electing it.

2. Identifying the Reporting Counterparty

As noted above, proposed § 39.6(b) would require one of the counterparties to the swap to act as the ''reporting counterparty.'' WSPP requested that the Commission clarify who the reporting counterparty is. WSPP noted that the Commission indicated in the NPRM that the reporting counterparty would be determined in accordance with the swap data recordkeeping and reporting rules and that if one of the counterparties is an MSP or swap dealer, then that entity would be the reporting counterparty. WSPP further noted that proposed § 39.6 itself would not impose such a requirement, and recommended that the Commission either cross-reference the relevant swap reporting rules in § 39.6 or define ''reporting counterparty'' for purposes of § 39.6. WSPP also requested clarification as to how two electing counterparties in an electing counterparty-to-electing counterparty transaction would determine which counterparty is the reporting counterparty, and whether the reporting counterparty would provide information on both electing counterparties at the same time.

The Commission notes that § 45.8 of its swap data recordkeeping and reporting rules sets out how the determination of which counterparty is the reporting counterparty for a swap is to be made.[32] The Commission is revising § 39.6(b) to include a reference to § 45.8.

3. Reporting Methods

As noted above, proposed § 39.6(b) would require the reporting counterparty to provide or cause to be provided to a registered SDR, or if no registered SDR is available, to the Commission, the information set forth in that paragraph. CFI recommended that the Commission revise the proposed rule to permit an electing counterparty to summarize or submit copies of ISDA agreements and credit support agreements to the Commission to demonstrate how the electing counterparty generally meets its financial obligations related to non-cleared swaps. Similarly, EDF Trading stated that for transactions where neither party is a swap dealer or MSP, the Commission should provide an alternative to SDR reporting, such as the opportunity to submit hard copy records.

Better Markets, Inc. (Better Markets) recommended that the Commission require electing counterparties to report directly to the Commission, in addition to an SDR. According to Better Markets, this would ensure that the Commission receives complete and timely information regarding reliance upon the end-user exception. Hess requested that the Commission permit electing counterparties who are not swap dealers or MSPs to report directly to an SDR or the Commission, rather than rely on a swap dealer or MSP counterparty to report. Hess commented that such a requirement would be more efficient and reliable.

The Commission has determined not to revise § 39.6(b) in response to these comments. As discussed further in the considerations of costs and benefits in Section III hereof, the Commission believes that adopting alternative approaches to reporting is unnecessary, unduly burdensome, and may complicate data management and review. In response to Hess' comment, the Commission notes that, as previously discussed, the final rule has been revised to permit electing counterparties to report much of the information required by the rule directly to an SDR or the Commission on an annual basis. For the information required to be reported on a swap-by-swap basis, the reporting counterparty must be determined in accordance with § 45.8.

In the NPRM, the Commission stated that a reporting counterparty would provide the information required by proposed § 39.6(b) via a ''check-the-box'' approach and asked whether such an approach would be appropriate.

EMUS, IECA, National Grain and Feed Association (NGFA), and WSPP commented that a check-the-box approach is sufficient to collect the information required. IECA recommended that the Commission specify the check-the-box system in the rule text.

In contrast, Professor Michael Greenberger commented that a check-the-box approach is inadequate. According to Professor Greenberger, this

[30] *See, e.g.,* Sections 4(g) and 4(r) of the CEA; and Part 45 of the Commission's regulations.

[31] The Commission believes that the cost of establishing an additional reporting alternative is unlikely to be significant because the SDR and the Commission may do so in conjunction with establishing numerous other reporting processes, such as those required by the Commission's Part 43 rules on real-time public reporting of swap transaction data (77 FR 1182 (Jan. 9, 2012)).

[32] *See* 77 FR 2136 at 2207 (Jan. 13, 2012) (Swap Data Recordkeeping and Reporting Requirements; final rule).

approach will almost certainly be unreliable because the Commission will not have the necessary information to monitor and prevent potential abuse of the end-user exception.

EMUS expressed concern that different reporting counterparties could provide the same information to a registered SDR in different formats. It recommended that the Commission adopt a yes-or-no schema for each of the items set forth in proposed § 39.6(b)(1)–(6). According to EMUS, such a system would standardize reporting, which would provide more useful information. EMUS also commented that a standardized submission format would reduce costs and facilitate reporting for electing counterparties.

The Commission is satisfied that a check-the-box approach is an appropriate method to collect the information that the Commission requires to exercise regulatory oversight and that it mitigates the costs of compliance for the electing and reporting counterparties. In addition, a check-the-box approach provides a standardized data collection method for voluminous amounts of data, which will facilitate effective review by the Commission. It would be inefficient for the Commission to monitor and analyze a large volume of unique data points from a potentially wide range of electing counterparties.

The final rule itself does not specify the exact format for reporting purposes because the Commission's Part 45 rules establish the reporting requirements for all swap data, including the information required under § 39.6.

4. Reporting of Inter-Affiliate or Cooperative-to-Member Swaps

A few commenters raised issues regarding reporting of swaps between particular types of counterparties. Shell requested that the Commission clarify that swaps between affiliates need not be reported because such reporting for inter-affiliate swaps provides no useful information to the Commission and would be burdensome.

NCFC requested clarification regarding who provides the financial obligation information in a transaction between a cooperative and its members (such as producers or elevators) or customers (*e.g.,* an electing counterparty-to-electing counterparty transaction). NCFC also questioned whether an SDR or the Commission will accept the data for transactions that cooperatives enter into with their members and customers and whether the Commission has the resources to accept such data.

In response to Shell's comment, the Commission notes that, although Congress expressly addressed in Section 2(h)(7)(D) of the CEA when an affiliate executing a swap on behalf of another affiliate may qualify for the end-user exception, Congress did not exempt such inter-affiliate swaps from the reporting requirements. Because inter-affiliate swaps must be reported, the parties also must provide the information required under § 39.6(b) so that the Commission will know why a swap that would otherwise be subject to clearing is not being cleared. In response to NCFC's request for clarification as to who provides the financial obligation information for cooperative-to-member swaps, the Commission notes that the reporting counterparty in such electing counterparty-to-electing counterparty transactions is to be determined in accordance with § 45.8, as previously discussed.

5. Finance Affiliates

As previously noted, Section 2(h)(7)(C)(iii) of the CEA provides that the definition of ''financial entity'' ''shall not include an entity whose primary business is providing financing, and uses derivatives for the purpose of hedging underlying commercial risks related to interest rate and foreign currency exposures, 90 percent or more of which arise from financing that facilitates the purchase or lease of products, 90 percent or more of which are manufactured by the parent company or another subsidiary of the parent company.'' Section 2(h)(7)(D)(i) of the CEA provides that an affiliate of a person that qualifies for the end-user exception also may qualify for the exception but only if the affiliate, acting on behalf of the person and as an agent, uses the swap to hedge or mitigate the commercial risk of the person or other affiliate of the person that is not a financial entity. Section 2(h)(7)(D)(ii) identifies certain types of financial entities that cannot act as an affiliate electing counterparty on behalf of another person under Section 2(h)(7)(D)(i), indicating that financial entities that are not identified in Section 2(h)(7)(D)(ii) may do so. Proposed § 39.6(b)(3) would implement these provisions and require the reporting counterparty to report, or cause to be reported, whether the electing counterparty is a ''finance affiliate'', *i.e.,* a financial entity electing the end-user exception by virtue of Section 2(h)(7)(C)(iii) or 2(h)(7)(D) of the CEA.

EMUS requested that the Commission clarify whether the reporting counterparty must report that the electing counterparty is an affiliate of another person qualifying for the end-user exception under Section 2(h)(7)(D)(i) of the CEA or a finance affiliate of such a person. According to EMUS, the NPRM indicated that the notification requirement would apply to all affiliates, while the rule text indicated a notification requirement would apply only to finance affiliates.

In response to EMUS, the Commission is revising § 39.6(b)(3) (renumbered in the final rule as § 39.6(b)(1)(iii)(A)(*1*)) to clarify that the notification requirement only applies to financial entities acting as affiliates. While identification of financial entities acting as affiliates is important because they are an exception to the prohibition on financial entities electing the end-user exception, the Commission does not believe that identification of non-financial entities acting as agents for affiliated entities is necessary. Similarly, the Commission is further revising this provision to add a requirement for electing counterparties to report whether they are ''financial entities'' as defined in Section 2(h)(7)(C)(i) of the CEA that are nevertheless exempt from the definition of ''financial entity'' as described in § 39.6(d). But for the exemption provided in § 39.6(d), such entities would be prohibited from electing the end-user exception (the exemption in § 39.6(d) is discussed in Section D below).

6. Reporting How an Electing Counterparty Generally Meets Financial Obligations Associated With Non-Cleared Swaps

As noted above, Section 2(h)(7)(A)(iii) of the CEA requires that the Commission be notified as to how an electing counterparty generally meets its financial obligations associated with entering into non-cleared swaps. Proposed § 39.6(b)(5) would implement this provision.

NGSA recommended that the Commission modify the language of its proposed rule to be identical to the statutory language—namely, that the words ''expects to meet'' and ''swap'' in proposed § 39.6(b)(5) should be replaced with the words ''meets'' and ''swaps,'' respectively.

CFC recommended that the information contained in the notice should be general enough to encompass all transactions of an electing counterparty, and the notice should contain information as to how entities meet the obligations of multiple types of non-cleared swaps, not individual swaps.

CDEU and EMUS commented that the information the Commission proposed

to collect is sufficient. According to CDEU, any additional information on meeting obligations would be non-standardized information that is not easily captured and reportable in a systematic fashion. CDEU commented that non-financial counterparties do not pose systemic risk and it is not clear how the reporting of more information on meeting financial obligations comports with the legislative intent of the Dodd-Frank Act.

Several commenters recommended that the Commission collect substantially more information, including specific information such as the types of collateral the electing counterparty will use to satisfy its financial obligations, the exact collateral terms and arrangements, and the contractual terms and provisions.[33]

The Commission is modifying proposed § 39.6(b)(5) (renumbered in the final rule as § 39.6(b)(1)(iii)(C)) to read as follows: ''How the electing counterparty generally meets its financial obligations associated with entering into non-cleared swaps by identifying one or more of the following categories, as applicable. * * *'' The Commission believes this revision more accurately reflects the Dodd-Frank Act's intent that an electing counterparty must demonstrate how it ''*generally* meets its financial obligations'' (emphasis added) with respect to non-cleared swaps. Furthermore, the Commission is declining to modify proposed § 39.6(b)(5) to require reporting of additional, specific information because the statute only requires the electing counterparty to provide notice of how it ''generally meets its financial obligations.'' The Commission believes that the information required by the regulation will enable the Commission to exercise its regulatory oversight in an efficient and effective manner given the wide variety of different types of swaps and swap hedging strategies used by commercial entities.

7. How a Counterparty Meets Its Financial Obligations

Proposed § 39.6(b)(5)(i) through (v) would set forth categories of means by which an electing counterparty could generally meet its financial obligations associated with non-cleared swaps.

The National Rural Electric Cooperative Association (NRECA) asked the Commission to confirm that, in representing which swaps are secured by collateral, the counterparty should check the box under proposed § 39.6(b)(5)(ii) only if all or any portion of the financial obligations associated with the reported swap are secured by collateral that has been pledged to the swap counterparty at the time the swap is entered into. NRECA also asked whether that counterparty should check the box under proposed § 39.6(b)(5)(i) only if the obligations associated with the reported swap are to be secured in the future by collateral that is to be, or may in the future be, pledged to the swap counterparty pursuant to a master agreement or other credit support agreement applicable to the swap. NRECA also asked whether proposed § 39.6(b)(5)(i) is the appropriate box to check when the counterparties have in place collateralization arrangements subject to agreed-upon unsecured credit thresholds.

NRECA asked how a reporting counterparty may satisfy proposed § 39.6(b)(5) where the financial obligations are not satisfied by any of the collateral set forth under proposed § 39.6(b)(5)(i) through (iii) and the electing counterparty ''intends to generally meet its financial obligations associated with non-cleared swaps'' by managing its commercial risks prudently, offsetting its obligations under its non-cleared swaps against those commercial risks and, for a not-for-profit electricity provider, passing through its costs and benefits of hedging to its retail energy customers during the time period(s) for which a swap hedges or mitigates commercial risk. NRECA asked the Commission to clarify whether such a reporting counterparty should check the box for proposed § 39.6(b)(iv) or (v). NRECA also asked whether the financial resources must be ''available'' for purposes of proposed § 39.6(b) at the time the swap is executed or by the time the swap is expected to settle and hedge or mitigate the commercial risk.

In response to NRECA's comments, the Commission is modifying the text of proposed § 39.6(b)(5)(i)–(v) (renumbered in the final rule as § 39.6(b)(1)(iii)(C)(*1*) through (*5*)) to provide greater clarity as follows (new language emphasized): ''(*1*) A written credit support agreement; (*2*) Pledged or segregated assets (including posting or receiving margin *pursuant to a credit support agreement or otherwise*); (*3*) A written third-party guarantee; (*4*) The electing counterparty's available financial resources; or (*5*) Means other than those described in paragraphs (b)(1)(iii)(C)(*1*), (*2*), (*3*) or (*4*) of this section * * *.''

In response to the comment regarding reporting of multiple sources, the Commission believes the word ''solely'' in proposed § 39.6(b)(5)(iv) may have created some uncertainty and has deleted this word from the final rule text. The NPRM stated that parties are required to check multiple boxes if multiple sources of financial resources may be used. For clarity, the Commission is modifying the text of proposed § 39.6(b)(5) (renumbered as § 39.6(b)(1)(iii)(C)) to expressly require the checking of all applicable categories. In the example provided by NRECA, where the parties have a credit support arrangement subject to a threshold, the reporting counterparty would check one or more of the following: (1) Proposed § 39.6(b)(5)(i) if the credit support arrangement is subject to a credit support agreement; (2) proposed § 39.6(b)(5)(ii) if the credit support arrangement provided for pledging or segregating assets; and (3) proposed § 39.6(b)(5)(iv) if the electing counterparty will use available financial resources to cover any amount up to the threshold listed in the credit support agreement.

Finally, the Commission believes that NRECA's example, where no collateral is used to satisfy obligations, falls squarely in proposed § 39.6(b)(5)(iv). The rule only requires that the electing counterparty identify how it generally meets its financial obligations with regard to uncleared swaps.

8. Board Approval for SEC Filers

Under Section 2(j) of the CEA, exemptions from the requirements of Section 2(h)(1) to clear a swap and Section 2(h)(8) to execute a swap through a board of trade or SEF are available to a counterparty that is an issuer of securities that are registered under Section 12 of the Securities Exchange Act of 1934 or that is required to file reports pursuant to Section 15(d) of the Securities Exchange Act of 1934 (an ''SEC Filer''), but only if an appropriate committee of the issuer's board or governing body has reviewed and approved the decision to enter into swaps that are subject to such exemptions. Proposed § 39.6(b)(6) would implement this provision and require an SEC Filer to report, on a swap-by-swap basis, whether an appropriate committee of its board of directors (or equivalent body) has reviewed and approved the decision not to clear the swap subject to the clearing requirement.

A number of commenters interpreted proposed § 39.6(b)(6) as requiring an SEC Filer's board of directors to approve each decision to not clear a swap (*i.e.,* to grant approval on a swap-by-swap basis) and commented that Section 2(j)

[33] *See, e.g.,* Americans for Financial Reform (AFR), American Federation of State, County and Municipal Employees (AFSCME), Better Markets, PMAA & NEFI, and Professor Greenberger.

of the Dodd-Frank Act does not impose such a requirement.[34] COPE noted that companies generally do not engage in transaction-specific board actions.

According to most of these commenters, swap-by-swap board approval would impose excessive costs and burdens on companies.[35] AGA stated that a requirement that a board convene, review, and approve each and every decision to enter into a non-cleared swap transaction would be so administratively burdensome as to preclude its use.

Several commenters remarked that boards should be given broad discretion over their hedging strategies and how they choose to authorize entering into non-cleared swaps.[36] Commenters also recommended that companies should be able to delegate board approval to the appropriate board, committee, or corporate official on a general or ''blanket'' basis for either all swaps or various categories of swaps.[37] For example, COPE recommended that the Commission revise proposed § 39.6(b)(6)(ii) to state that a board or committee may authorize the company to adopt a policy which grants general and continuing authority to enter into one or more swaps which are not cleared, and that specific approval is not required before entering into each and every swap. NGSA and the Committee on Futures and Derivatives Regulation of the New York City Bar Association (NYCBA) commented that the Commission should clarify footnote 18 [38] of the NPRM and revise proposed § 39.6(b)(6)(ii) by replacing the words ''the decision not to clear the swap'' with the words ''the decision not to clear such swaps.''

Cravath commented that the requirements should be flexible enough such that companies are able to manage and supervise their non-cleared swaps in a manner that is consistent with their existing governance policies.

On the other hand, Better Markets suggested imposing additional disclosure requirements on the companies, including specific justification for why each swap is not cleared. Better Markets also recommended that the SEC Filer's CEO and CFO be required to certify that they have conducted a substantive review of the board committee's action and decision not to clear the swaps.

The Commission believes that Section 2(j) of the Dodd-Frank Act does not require board approval of each decision by an SEC Filer to enter into a swap that is exempt from the clearing requirement. As noted above, Section 2(j) of the CEA states that exemptions from Sections 2(h)(1) and 2(h)(8) (*i.e.,* the clearing and trade execution requirements) shall be available to an SEC Filer ''only if an appropriate committee of the [SEC Filer]'s board or governing body has reviewed and approved its decision to enter into swaps that are subject to such exemptions.'' The Commission interprets this language to allow board approval on a general basis. To remove any ambiguity, the Commission is modifying proposed § 39.6(b)(6)(ii) (renumbered as § 39.6(b)(1)(iii)(D)(*2*)) to read as follows: ''Whether an appropriate committee of that counterparty's board of directors (or equivalent body) has reviewed and approved the decision to enter into swaps that are exempt from the requirements of sections 2(h)(1) and 2(h)(8) of the Act.'' This change allows for board approval on a general, as opposed to swap-by-swap, basis. Also, the reference to both Sections 2(h)(1) and 2(h)(8) makes clear that the board must have approved the decision to enter into swaps that are neither cleared nor executed on a DCM or SEF, as required by Section 2(j).

Commenters also discussed how frequently the counterparty should be required to provide notice that the board has approved use of the end-user exception and how frequently the board must renew its approval. A number of commenters suggested that an annual certification of board approval of a general hedging policy would be sufficient.[39] NRECA stated that annual certification should be sufficient unless there is an intervening material change in the board approval information previously submitted. AGA commented that the Commission should be satisfied if the company's officers and/or risk committee annually reports to the board to ensure that the board remains informed of hedging activities. Hess, NRECA, and Shell commented that boards or board-appointed committees should be able to approve swaps on a periodic basis for either several months or years. IECA recommended that board approval be required whenever a company enters into a new ISDA agreement for swap transactions.

EEI and RESA recommended a one-time notice that the board has approved the use of the end-user exception. WGCEF commented that companies should be able to adopt a single continuing resolution approving any decision to use the end-user exception. Peabody agreed that a single determination by a committee, which would only be revisited as the committee deems necessary, is appropriate.

As noted above, the Commission has revised proposed § 39.6(b)(6) so that entities have the option to report board approval information annually or on a swap-by-swap basis. The Commission would expect an SEC Filer's board to set appropriate policies governing the SEC Filer's use of swaps subject to the end-user exception and to review those policies at least annually and, as appropriate, more often upon a triggering event (*e.g.,* a new hedging strategy is to be implemented that was not contemplated in the original board approval).

A number of commenters requested that the Commission clarify some of the terms used in proposed § 39.6(b)(6)(ii). NYCBA requested clarification as to what constitutes an ''appropriate committee'' for purposes of reviewing and approving the decision not to clear a swap. AGA asked the Commission to confirm that if a utility is a subsidiary of an SEC Filer, then the subsidiary's board committee would authorize the swap, not the board of the SEC Filer. IECA recommended that the rule be revised to expressly provide that approval must be given by the board of the transacting entity, not the board of an affiliate. Finally, EMUS requested clarification as to the meaning of ''issuer of securities.''

The Commission considers a committee to be appropriate if it is specifically authorized to review and approve the SEC Filer's decision to enter into swaps.[40] The SEC Filer's board would have reasonable discretion to determine the appropriate committee for approving decisions on swaps for its subsidiaries or affiliates.

[34] *See, e.g.,* AGA, API, CDEU, COPE, Cravath, EEI & EPSA, EMUS, EPSA, IECA, NFPEEU, NGSA, NRECA, Mr. Steve Quinlivan, RESA, SDG&E, WGCEF, and WSPP.

[35] *See, e.g.,* AGA, COPE, Cravath, EEI, EMUS, Hess, IECA, NGSA, NREC, NYCBA, Mr. Quinlivan, SDG&E, and WSPP.

[36] *See, e.g.,* ATA, COPE, EMUS, SDG&E, and WGCEF.

[37] *See, e.g.,* AGA, API, ATA, Cope, Cravath, EEI, EEI & EPSA, Hess, NFPEEU, NRECA, NYCBA, NGSA, Mr. Quinlivan, SDG&E, and WGCEF.

[38] Footnote 18 of the NPRM stated: ''For example, a board resolution or an amendment to a board committee's charter could expressly authorize such committee to review and approve decisions of the electing person not to clear the swap being reported. In turn, such board committee could adopt policies and procedures to review and approve decisions not to clear swaps, on a periodic basis or subject to other conditions determined to be satisfactory to the board committee.'' 75 FR at 80750.

[39] *See, e.g.,* AGA, EEI, EMUS, Hess, NEMA, and SDG&E.

[40] *See* 75 FR at 80750 n. 16.

In response to the comment regarding the meaning of ''issuer of securities,'' the Commission notes that Section 2(j) of the CEA refers to an ''an issuer of securities that are registered under section 12 of the Securities Exchange Act of 1934 (15 U.S.C. 78l) or that is required to file reports pursuant to section 15(d) of the Securities Exchange Act of 1934 (15 U.S.C. 78o).'' The SEC has stated that, for purposes of its proposed rule governing the end-user exception to mandatory clearing of security-based swaps, ''a counterparty invoking the end-user clearing exception is considered by the [SEC] to be an issuer of securities registered under Exchange Act Section 12 or required to file reports pursuant to Exchange Act Section 15(d) if it is controlled by a person that is an issuer of securities registered under Exchange Act Section 12 or required to file reports pursuant to Exchange Act Section 15(d).'' [41] The Commission is interpreting this term in the same manner as the SEC.

9. Liability for Reporting

Several commenters recommended that the Commission provide a safe harbor from liability for firms who report on behalf of other firms.[42] These commenters expressed concern that the proposed regulations may not protect the electing counterparty from potential liability if the reporting counterparty misreports information regarding the electing counterparty. These commenters also expressed concern that a swap dealer or MSP may be liable if the electing counterparty provides the swap dealer or MSP with false information and the swap dealer or MSP then provides the false information to an SDR or the Commission. NGSA, CDEU, and RESA commented that the Commission should authorize a reporting entity to rely on the written representations or affirmations of the electing counterparty. NCFC stated that the Commission should not require a reporting firm to verify the information provided by the electing counterparty. In the event that a reporting counterparty incorrectly reports a swap, CDEU recommended that the Commission provide a procedure to cure a notice failure.

The Commission notes that proposed § 23.505 addresses obtaining and reporting end-user exception information by swap dealers and MSPs.[43] Under that proposed rule, ''[e]ach swap dealer and major swap participant shall obtain documentation sufficient to provide a reasonable basis on which to believe that its counterparty meets the statutory conditions required for an exception from a mandatory clearing requirement, as defined in section 2(h)(7) of the Act and § 39.6 of this chapter.''

To provide greater clarification for the end-user exception, the Commission is modifying § 39.6 to add § 39.6(b)(3), which states: ''Each reporting counterparty shall have a reasonable basis to believe that the electing counterparty meets the requirements for an exception to the clearing requirement under section 2(h)(7) of the Act and this section.'' [44] The Commission believes that establishing this explicit standard will give reporting counterparties greater clarity as to how to comply with the requirements of the rule and will help prevent abuse of the end-user exception. What constitutes a ''reasonable basis to believe'' will depend on the applicable facts and circumstances. For example, a reporting counterparty that has a long-standing business relationship with the electing counterparty and knows that the electing counterparty is doing the same repetitive swap trades for the same commercial risk hedging purposes may be able to rely on its due diligence for the initial swap in the series and not need to re-establish the due diligence for every subsequent swap trade. As a further example, it may be reasonable in many circumstances for the reporting counterparty to rely on appropriate representations from the electing counterparty. On the other hand, if the reporting counterparty has a reasonable basis to believe that the representations of the electing counterparty are not accurate for a particular swap being considered, then the reporting counterparty may not reasonably rely on those representations for that swap.

In response to comments concerning the liability of electing counterparties that are dependent on reporting counterparties to fulfill the reporting requirements of the rule, the electing counterparty is entitled to rely on reasonable representations by the reporting counterparty that the notification information has been properly transmitted. In such circumstances, the electing counterparty would not be subject to adverse consequences and the swap will not be deemed ineligible for the end-user exception for failure of the reporting counterparty to properly report the information.

Regarding CDEU's comment on correcting information later determined to have been reported incorrectly, the Commission notes that its swap data recordkeeping and reporting rules address this issue for reported information generally in § 45.14.[45]

10. Commission Approval for Use of the End-User Exception

NCSHA requested that the Commission clarify how the notification and reporting requirements of § 39.6 will affect the approval process for eligible counterparties electing the end-user exception. According to NCSHA, it is unclear whether the Commission will deny a counterparty the right to elect the end-user exception on the basis of ''insufficiently meeting the Commission's notification and reporting requirements.'' NCSHA does not believe the Commission has the authority to reject eligible counterparties from electing the end-user exception on the basis of a failure to meet the Commission reporting or notification standards. However, if the Commission determines that it has that authority, NCSHA requested that the Commission provide a detailed list of the criteria it deems as necessary for a counterparty to sufficiently meet the CEA's notification and reporting requirements.

The Commission notes that § 39.6 does not include a process for approving a counterparty's election of the end-user exception, but a potential electing counterparty must meet the notification and reporting requirements in order to be eligible to elect the exception.

C. Hedging or Mitigating Commercial Risk

Section 2(h)(7)(A)(2) of the CEA provides that a swap shall not be subject to the clearing requirement if, among other things, one of the counterparties to the swap ''is using swaps to hedge or mitigate commercial risk * * *.'' Proposed § 39.6(c) provides potential electing counterparties with criteria for

[41] *See* 75 FR 79992 at 79996 n. 34 (Dec. 21, 2010) (End-User Exception to Mandatory Clearing of Security-Based Swaps).

[42] *See, e.g.,* Cravath, EMUS, IECA, NCFC, NGSA & NCGA, NRECA, and Peabody.

[43] *See* 76 FR 6715 at 6726 (Feb. 8, 2011) (Swap Trading Relationship Documentation Requirements for Swap Dealers and Major Swap Participants).

[44] Unlike proposed § 23.505, this provision does not include a requirement to ''obtain documentation.'' This is because proposed § 23.505 applies only to swap dealers and MSPs, whereas the reporting counterparty under § 39.6 may be a non-swap dealer/MSP. Such entities are less likely to have standardized documentation compliance systems in place and therefore obtaining documentation may be burdensome. To reduce this burden, the Commission has determined to provide greater flexibility in this rule.

[45] *See* 77 FR 2136 at 2210 (Jan. 13, 2012) (Swap Data Recordkeeping and Reporting Requirements; final rule).

determining whether a swap hedges or mitigates commercial risk.[46]

1. Breadth of the Criteria

As noted in the NPRM, the criteria for what constitutes hedging or mitigating commercial risk in proposed § 39.6(c) are generally designed to allow a wide variety of potential electing counterparties to structure their swaps in a manner that fits their particular businesses while also providing guidance and a measure of certainty in discerning the line between swaps used for hedging or mitigating commercial risk and swaps used for other purposes.

Many commenters supported a broad set of criteria that would provide entities with sufficient flexibility to accommodate different risk mitigation strategies.[47] EEI & EPSA stated that a limited set of criteria (particularly with regard to hedging financial risks, as discussed in Section II.C.2 below) would prevent non-financial entities from effectively hedging risks associated with significant parts of their commercial businesses and could conflict with Section 737 of the Dodd-Frank Act (which concerns position limits). CDEU recommended that commercial risk be construed more broadly to incorporate all risks associated with an entity's operations, including, but not limited to, interest rate risk, currency risk, credit risk, equity price risk, and risks arising from the purchase, ownership, production, storage, sale, financing, or transportation of commodities.

Conversely, other commenters suggested that the Commission should construe commercial risk more narrowly.[48] A number of commenters recommended that the definition of ''commercial risk'' be narrowly tailored to apply only to those entities whose business activities expose them to risk from physical commodity price fluctuations.[49] According to these commenters, ''commercial risk'' should not include risks that are purely financial in nature. AFR expressed concern that the proposed rule construes commercial risk too broadly and would provide little direction as to whether a swap position is hedging or mitigating commercial risk. In AFR's view, any business risks might qualify under the proposed regulations. AFR recommended that the Commission provide a narrower, prescriptive definition.

The Commission has determined that the criteria described in proposed § 39.6(c) should not change except for certain limited changes specifically discussed below. The Commission believes that by limiting the end-user exception to swaps that hedge or mitigate commercial risk, Congress made clear that it did not intend the exception to be applicable for all types of risk. Given the wide variety of potential electing counterparties, swaps, and hedging scenarios, the Commission believes that the rule strikes an appropriate balance between providing flexibility for entities to qualify for the end-user exception and clarity on the limits of the exception.

2. Treatment of Commodity Risks and Financial Risks

Proposed § 39.6(c) sets out criteria for hedging certain financial risks such as interest, currency, or foreign exchange rate risks. The Commission asked in the NPRM whether the rule should only apply to swaps involving non-financial commodities.

Several commenters noted that non-financial entities regularly hedge financial risks related to their business operations and that limiting the rule to risks related to non-financial commodities would be unduly restrictive.[50] In contrast, other commenters stated that the rule should be limited to risks related to physical commodity price fluctuations and the principal business of the electing counterparty and should not include purely financial risks.[51] Some commenters expressed the view that the end-user exception should be limited so that it can only be used in direct proportion to the electing counterparty's physical holdings.[52] These commenters believe this approach would prevent an entity that is engaged in commercial activity from claiming the end-user exception for risks that are not commercial. AFSCME expressed concern about including foreign exchange hedging because foreign exchange transactions are alleged to be regularly abused and manipulated.

The Commission declines to revise proposed § 39.6 to exclude hedging of commercial ''financial'' risks from the end-user exception. The Commission believes that an entity that may elect the end-user exception can be subject to financial risks related to its commercial activities and that these risks can constitute commercial risks. For example, a change in interest rate risk on a non-financial entity's debt incurred for commercial business operations (*e.g.,* to fund the purchase of inputs or to build a factory for the entity) can constitute commercial risk. As a further example, § 39.6(c)(1)(i)(F) addresses the risk of a change in interest, currency or foreign exchange risk exposures arising from a person's current or anticipated assets or liabilities in the ordinary course of business.[53]

Furthermore, the Commission does not believe the end-user exception was intended to apply only to physical commodity hedging. The Commission notes that the Dodd-Frank Act did not limit the end-user exception to physical position hedging. However, the Commission acknowledges the concern of commenters that allowing the end-user exception to be used for financial risk hedging might increase the potential for abuse of the exception. The Commission emphasizes that the use by non-financial entities of the end-user exception for financial risk hedging or mitigation must be an incidental part of (*i.e.,* not central to) the electing counterparty's business and must fully qualify under all other applicable provisions of the CEA and § 39.6. The Commission will monitor the use of the end-user exception, particularly when it is used for hedging financial risks. If the Commission finds that the end-user exception is being abused in this regard, it will take appropriate action.

3. Facts and Circumstances Test

The Commission noted in the NPRM that it preliminarily believed that whether a position is used to hedge or mitigate commercial risk should be determined by the facts and circumstances existing at the time the

[46] The phrase ''hedge or mitigate commercial risk'' was also the subject of joint rulemaking by the Commission and the SEC for purposes of the ''major swap participant'' definition under Section 1a(33) of the CEA. The overlap of that joint rulemaking and § 39.6(c) is addressed in Section II.C.11 below.

[47] *See, e.g.,* CDEU, API, APGA, EEI & EPSA, Kraft, CMC, Milbank, and Philip Morris.

[48] *See, e.g.,* AFR, AFSCME, WDM, IPM&CSA, East Coast Petroleum (ECP), Pennsylvania Petroleum Marketers and Convenience Store Association (PPMCSA), Commodity Markets Oversight Coalition (CMOC), Fuel Merchants of New Jersey (FMNJ), Georgia Oilmen's Association (GOA), Skylands Energy Service, Inc. (Skylands), Weiss, Edward M. Minicozzi, Medford Heating (Medford), Tobin, Sullivan, Fay & Grunebaum, and Form Letters.

[49] *See, e.g.,* CMOC, ECP, FMNJ, IPM&CSA, Medford, General Utilities, Inc., PPMCSA, and Skylands.

[50] *See, e.g.,* Independent Community Bankers of America (ICBA), COPE, Peabody, WSPP, and SIFMA.

[51] *See, e.g.,* WDM, IPM&CSA, ECP, PPMCSA, CMOC, FMNJ, GOA, Skylands, General Utilities, Inc., Medford, and Ms. Roselyn Devlin.

[52] *See, e.g.,* Skylands, FMNJ, General Utilities, Inc., Cochrans, ECP, and Medford.

[53] Proposed § 39.6(c)(1)(i)(E) addressed similar financial risks arising from rate ''movements'' rather than ''exposures.'' However, the text of proposed § 39.6(c)(1)(i)(E) inadvertently referred only to foreign exchange rates. Accordingly, the final rule text has been revised to include interest and currency rates to be consistent with § 39.6(c)(1)(i)(F).

swap is entered into, and should take into account the person's overall hedging and risk mitigation strategies.

A number of commenters generally agreed with the Commission's preliminary view.[54] EDF Trading suggested that such an approach is the only commercially practical way to implement the rule. NRECA commented that the Commission should make clear in its rules that it will not second-guess the decision of an electing counterparty to enter into the swap and the decisions related to the terms of the swap for which the end-user exception is elected, and should not provide for review of such commercial risk management decisions with the benefit of hindsight.

The Commission confirms that counterparties should look to the facts and circumstances that exist at the time the swap is executed to determine whether a swap satisfies the criteria for hedging or mitigating commercial risk as set forth in the final rule. In response to NRECA's comment, the Commission does not believe it is necessary to expressly set forth the facts and circumstances test in § 39.6. The Commission notes that nothing in § 39.6 would require ongoing reporting or testing of a swap's hedge effectiveness.[55] The Commission further notes, however, that it may review whether the election of the end-user exception was made in compliance with the CEA and the Commission's regulations at the time such election was made.

4. Commercial Status of the Electing Counterparty

The Commission received a number of comments on whether ''commercial'' refers to (i) the underlying activity being hedged or (ii) the nature of the general activities of the entity claiming the end-user exception. CDEU, ICBA, WSPP, and the Securities Industry and Financial Markets Association (SIFMA) agreed with the Commission's general view expressed in the NPRM that the determinant of whether a risk is ''commercial'' should be based on the underlying activity to which the swap relates and not the general nature of the electing counterparty's activities. A number of commenters requested that, to avoid any uncertainty, the rule language clarify that governmental and non-profit entities can incur commercial risks (such as interest rate risk associated with debt).[56] Similarly, Norges Bank Investment Management asked the Commission to confirm that use of the word ''commercial'' does not preclude foreign central banks and other sovereign entities from relying on the end-user exception.[57]

In response to a question asked in the NPRM, ICBA commented that agricultural cooperatives and non-profit, governmental, or municipal entities should not receive any special considerations. ICBA reasoned that adding further gradations or special considerations could create competitive disadvantages for other entities. ICBA further noted that the Dodd-Frank Act contemplates special treatment under the end-user exception only for small financial institutions and accordingly, special treatment for other types of entities might contravene Congressional intent.

In response to these comments, the Commission confirms that the determination of whether the risk being hedged or mitigated is ''commercial'' will be based on the underlying activity to which the risk relates, not on the type of entity claiming the end-user exception.[58] The Commission confirms that this distinction applies to all potential electing counterparties including governmental entities, both domestic and foreign, and non-profit entities. Their status as governmental or non-profit entities does not control the determination of whether they are hedging or mitigating ''commercial'' risk. Rather, that determination will depend on the nature of the underlying activity to which the risk being hedged or mitigated relates.

Finally, the Commission believes that any additional language adding further gradations or special considerations in this regard could create confusion or unintended distinctions among different types of entities.

5. ''Economically Appropriate'' Standard

Under proposed § 39.6(c)(1)(i), a swap is used to hedge or mitigate commercial risk if the swap is ''economically appropriate'' to the reduction of any of six different categories of commercial risk listed in that section.[59] Kraft commented that the ''economically appropriate'' standard should not be further defined because ''bright-line'' definitions or limitations will result in less effective hedges and increased costs.

Better Markets expressed concern that the proposed ''economically appropriate'' standard may allow the end-user exception to be elected for swaps that do not hedge commercial risk precisely. Better Markets recommended that the Commission adopt a ''congruence'' standard that Better Markets believes fits the statutory language better. The ''congruence'' standard would require each risk in the swap to be congruent with a corresponding commercial risk being hedged.

On the other hand, SFG believes the ''economically appropriate'' standard is too narrow and should be replaced with a ''management or reduction of risks'' standard.

The Commission is adopting the ''economically appropriate'' standard as proposed. The Commission believes that this standard will help interested parties distinguish those swaps that hedge or mitigate commercial risks from those that do not, thereby reducing regulatory uncertainty and helping prevent abuse of Section 2(h)(7) of the CEA. The facts and circumstances will determine whether the swap is economically appropriate to hedge or mitigate commercial risks. While the Commission acknowledges that this standard leaves room for judgment in its application, the Commission believes this flexible approach is needed given the wide variety of swaps, potential electing counterparties, and hedging strategies to which the rule applies. The Commission believes the ''economically appropriate'' standard, together with the identification of the six different categories of permissible commercial risks listed in proposed § 39.6(c)(1)(i), is specific enough, when reasonably applied, to determine whether a swap is being used to hedge or mitigate commercial risk.

The Commission is not adopting a ''congruence'' standard because it

[54] *See, e.g.,* CDEU, Peabody, Philip Morris, EDF Trading, Kraft, NRECA, and AFSCME.

[55] Hedge effectiveness testing is discussed in further detail below in section II.C.9.

[56] *See, e.g.,* SIFMA, SIFMA MFP, SFG, Milbank, NCHSA, and WSPP.

[57] Based on the language of some of the comments, it appears that part of this concern may arise from the use of the phrase ''commercial enterprise'' in the proposed rule. That phrase is used to be consistent with existing § 1.3(z) of the Commission's regulations, which identifies activities that qualify as hedging in the futures markets.

[58] The exception to this approach is with respect to financial entities, which are defined in Section 2(h)(7)(C) of the CEA based on who they are or what they do generally. Financial entities are prohibited from electing the end-user exception under Section 2(h)(7)(A)(i) of the CEA.

[59] In the alternative to meeting the requirements of § 39.6(c)(1)(i), a swap executed by an electing counterparty may also be eligible for the end-user exception if the swap qualifies as a bona fide hedge for purposes of an exception from position limits under the CEA as provided in § 39.6(c)(1)(ii), or if it qualifies for hedging treatment under FASB Accounting Standards Codification Topic 815 or under GASB Statement 53 as provided in § 39.6(c)(1)(iii). Consequently, the universe of swaps that can qualify for the exception is broader than the universe of swaps that qualify as bona fide hedges for purposes of an exception from position limits under the CEA as provided in § 39.6(c)(1)(ii).

believes the standard, which would require that each component risk of the swap be congruent with each risk being hedged, may be too restrictive and difficult to apply given the range of potential electing counterparties, types of swaps, and hedging strategies. Nor is the Commission adopting a ''management or reduction of risks'' standard. SFG's recommendation does not explain what risk ''management'' means. Furthermore, the Commission is concerned that a standard based on ''management'' of risks may be overly inclusive and could apply to any swap that changes risk levels, including swaps that increase risk contrary to the goals of the Dodd-Frank Act.

6. Hedging Treatment Under Accounting Standards

Under proposed § 39.6(c)(1)(iii), a swap may be deemed to hedge or mitigate commercial risk if the swap qualifies for hedging treatment under Financial Accounting Standards Board (FASB) Accounting Standards Codification Topic 815. Professor Greenberger commented that transactions that meet the definition of hedging under accounting standards should qualify as commercial hedges.

SIFMA, SIFMA's Municipal Financial Products Committee (SIFMA MFP), and GFOA asked that the Commission revise the proposed rule to include swaps that qualify for hedging treatment under the Governmental Accounting Standards Board (GASB) Statement 53, Accounting and Financial Reporting for Derivative Instruments (Statement 53). Statement 53 is the accounting standard for establishing a bona fide hedge under the GASB accounting standards used by many local government entities in the United States. Although different from the FASB accounting standard for hedging treatment, Statement 53 is similar in effect.

The Commission agrees that entities that use GASB accounting standards should be able to use Statement 53 to demonstrate that a swap hedges or mitigates commercial risk in the same way that the FASB hedging standard is used. Accordingly, the Commission is revising proposed § 39.6(c)(1)(iii) to include swaps that qualify for hedging treatment under Statement 53.

7. Speculation, Investing, or Trading

Under proposed § 39.6(c)(2)(i), a swap does not hedge or mitigate commercial risk if it is used for a purpose that is in the nature of ''speculation, investing, or trading.'' Commenters expressed different views on whether swaps held for speculative, investing, or trading purposes should qualify as hedging or mitigating commercial risk and whether it is practical for the Commission to include the limitation in the rule. The Commission also received a number of comments that addressed application of the proposed limitation specifically to physical commodity swaps.

A number of commenters agreed that swaps which are used for one or more of the purposes of speculation, trading or investing should not qualify for the end-user exception.[60] Philip Morris commented that the proposed criteria for hedging or mitigating commercial risk sufficiently encompass swaps legitimately used to hedge commercial risks, while excluding those used for speculation, trading, or other non-hedging purposes. The Form Letters supported the general concept of this limitation, noting that the ''common sense'' exception for end users should not be broadened to allow institutions to ''gamble'' in the derivatives markets. AFR agreed with the Commission's approach as explained in footnote 23 of the NPRM, but also expressed concern that the proposed rule may be too flexible and could create a loophole for speculators claiming to be hedging commercial risk when in fact they are not.

Several commenters suggested revising the proposed rule to limit the possibility that the provision would be applied in an overly restrictive manner. IECA recommended that the words ''investing or trading'' be eliminated from § 39.6(c)(2)(i). IECA believes that, because swaps are ''traded'' and can appear on an entity's balance sheet, it is inappropriate to prohibit swaps used for investing or trading purposes. Vitol, Inc. (Vitol) expressed concern that excluding speculative or trading activities might preclude commercial firms that merchandise commodities or act as intermediaries in the supply chain from treating such positions as hedging or mitigating their commercial risk.

Commenters expressed particular concern that the term ''trading'' could be interpreted to include entering and exiting swap positions used to hedge or mitigate commercial risk and therefore such swaps would be ineligible for the end-user exception.[61] For example, WGCEF commented that a ''trading'' position held in anticipation of a potential price increase should qualify as hedging commercial risk, but under the proposed rule it could be interpreted as a ''trading'' position and not qualify for the end-user exception.

Similarly, BG LNG, API, and WGCEF believe, based on their reading of footnote 23 of the NPRM, that certain swaps entered into for the purpose of hedging physical market positions could be excluded. According to BG LNG and EPSA, any rule that prohibits the end-user exception from being applied generally to swaps that hedge physical market positions because they are classified as ''trading'' positions or ''speculative'' positions would have serious, adverse consequences to physical markets for energy and other commodities. Also in reference to footnote 23 in the NPRM, WGCEF and BG LNG commented that many swaps that represent ''arbitrage'' positions are themselves hedges of commercial risk and not the type of speculative swaps that should be denied the end-user exception. BG LNG further commented that the unwinding or offsetting of such swaps should not change their characterization as ''hedging or mitigating commercial risk.''

API, EPSA, and WGCEF recommended that the Commission clarify that swap positions that hedge other speculative or trading swap positions are also speculative or trading positions, unless such swap positions hedge physical commodity positions.

Cravath and Riverside commented that ''investments'' should be deleted from the limitation, noting that certain swaps that hedge or mitigate commercial risks specified in the rule may be treated as investments for accounting or other purposes.

Finally, WGCEF noted that ''trading,'' ''speculation,'' and ''investing'' were not defined in the proposed rule or the CEA.

The Commission is adopting § 39.6(c)(2)(i) as proposed. While the line between hedging or mitigating commercial risk and other uses of swaps can be difficult to discern at times, the Dodd-Frank Act nonetheless requires such determinations to be made. The Commission believes that explicitly prohibiting the end-user exception for swaps entered into for the purpose of speculating, investing, or trading, as opposed to swaps used for the purpose of hedging or mitigating commercial risk, will help entities to understand the limits of hedging or mitigating commercial risk for purposes of § 39.6 and will help prevent abuse of the exception.

The Commission believes that the meaning of § 39.6(c)(2)(i) is apparent when read in the overall context of § 39.6(c), which addresses the requirement in Section 2(h)(7)(A)(ii) of the CEA that the electing counterparty be using the swap to hedge or mitigate commercial risk. This requirement

[60] *See, e.g.,* BG Americas & Global LNG (BG LNG), Peabody, Philip Morris, Form Letters, and Cravath.

[61] *See, e.g.,* Hess, WGCEF, EPSA, and Peabody.

focuses on the purpose for which the potential electing counterparty is using the swap. Swaps executed for the purpose of speculating, investing, or trading are not being used to hedge or mitigate commercial risk. Such positions are, generally speaking, being executed primarily for the purpose of taking an outright view on market direction or to obtain an appreciation in value of the swap position itself and not primarily for hedging or mitigating underlying commercial risks. For example, swap positions held primarily for the purpose of generating profits directly upon closeout of the swap, and not to hedge or mitigate underlying commercial risk, are speculative or serve as investments. Further, as an alternative example, swaps executed for the purpose of offsetting potential future increases in the price of inputs that the entity reasonably expects to purchase for its commercial activities serve to hedge a commercial risk.

As noted above, several commenters expressed concern regarding the inclusion of ''trading'' in § 39.6(c)(2)(i). In the context of the rule, ''trading'' is not used to mean simply buying and selling. Rather, a party is using a swap for the purpose of trading under the rule in this context when the party is entering and exiting swap positions for purposes that have little or no connection to hedging or mitigating commercial risks incurred in the ordinary course of business. ''Trading,'' as used in § 39.6(c)(2)(i), therefore would not include simply the act of entering into or exiting swaps if the swaps are used for the purpose of hedging or mitigating commercial risks incurred in the ordinary course of business.[62]

The Commission acknowledges that some swaps that may be characterized as ''arbitrage'' transactions in certain contexts may also reduce commercial risks enumerated in § 39.6(c)(1). The discussion in footnote 23 of the NPRM was intended to clarify that swaps are speculative for purposes of the rule if entered into principally and directly for profit and not principally to hedge or mitigate commercial risk. The reference to ''arbitrage profits'' in footnote 23 was intended to provide an example of what is commonly a speculative swap, not to characterize all arbitrage swaps as speculative.

The Commission is not revising § 39.6(c)(2)(i) to provide an express exception for swaps related to physical commodity positions. Swaps related to physical positions are not always hedging or mitigating commercial risk. For example, a swap related to physical positions may be a speculative position taking an outright view of the underlying commodity market. In limiting the end-user exception to swaps that hedge or mitigate commercial risk, Congress did not provide an exception from that limitation for swaps related to physical positions.

The Commission also notes that some commenters may have interpreted the proposed rule as prohibiting an entity that claims the end-user exception with respect to certain swaps from entering into other swaps for the purpose of speculation, investing, or trading. The Commission reiterates that a party's ability to elect the end-user exception for a particular swap is a function of the purpose of the particular swap in question. The fact that a party enters into other unrelated swaps for the purpose of speculating, investing, or trading will have no effect on the counterparty's assessment of whether its other swaps meet the requirements of the rule.

8. Swaps Hedging Other Swaps

Under proposed § 39.6(c)(2)(ii), a swap that hedges or mitigates the risk of another swap or security-based swap may qualify as hedging or mitigating commercial risk only if the underlying swap or security-based swap itself is used to hedge or mitigate commercial risk.

Professor Greenberger generally agreed with the limitation in the proposed rule and recommended that the limitation be extended to all swaps hedging other swaps. In his view, hedges of other hedging swaps are inherently speculative and should not be allowed under the end-user exception.

Reval.com, Inc. (Reval) suggested that swap transactions that are executed on a ''matched book'' basis with swaps that are excepted from the clearing requirement should also be eligible for the clearing end-user exception. Several small or regional financial entities commented that swaps executed on a matched book or back-to-back basis with swap dealers, which hedge swaps executed with non-financial entities who themselves are using the swaps to hedge commercial risks, should get the benefit of the end-user exception.[63]

The Commission considered whether a swap that hedges another swap that itself is used to hedge or mitigate commercial risk could qualify for the end-user exception. The Commission determined that such a swap could qualify if it in fact hedges or mitigates commercial risk for a party entering into the swap. In connection therewith, the Commission has determined that ''matched book'' or ''back-to-back'' swaps that hedge or mitigate risks of other swaps may qualify for the end-user exception if the swap is used to reduce risks in the conduct and management of a commercial enterprise as set forth in § 39.6(c)(1) and the ''other swap'' itself qualifies for the end-user exception. This is why § 39.6(c)(2)(ii) provides that a swap that hedges or mitigates the risk of another swap or security-based swap may qualify as hedging or mitigating commercial risk, so long as the underlying swap or security-based swap itself is used to hedge or mitigate commercial risk. This provision allows successive swaps in a chain of back-to-back swaps to qualify for the end-user exception if the first underlying swap qualifies for the exception, and each such successive swap is used by a party to that successive swap that qualifies for the end-user exception to hedge or mitigate commercial risk. This result is only applicable to entities that could otherwise qualify for the end-user exception. Accordingly, in a chain of qualifying swaps involving only qualifying entities, if the ''last'' qualifying entity in the chain hedges its qualifying swap (its ''underlying swap'') by entering into a qualifying swap with a non-qualifying financial entity (its ''hedging swap''), then although the qualifying entity can elect to use the end-user exception with respect to its hedging swap, that financial entity cannot elect the end-user exception for any further swap used by that financial entity to hedge or mitigate its position. In effect, the chain is then broken.

Reval's comment indicates that the text of proposed § 39.6(c)(2) may be unclear. When the wording of proposed § 39.6(c) is read as a whole, the proposed rule provides that a swap qualifies for the end-user exception if it meets one of the conditions stated in proposed § 39.6(c)(1) and if, as stated in proposed § 39.6(c)(2), the swap is (i) not held for a speculative, investing, or trading purpose, or (ii) not hedging another swap unless that swap itself is held for hedging purposes. Accordingly, the literal text of proposed § 39.6(c)(2) could be interpreted to permit a swap to qualify for the end-user exception if the

[62] The Commission further clarifies that merchandising activity in the physical marketing channel qualifies as commercial activity, consistent with the Commission's longstanding bona fide hedging exemption to speculative position limits. *See* § 1.3(ttt)(1)(ii).

[63] *See, e.g.,* Susquehanna Bancshares, Inc., The Private Bank and Trust Company, Commerce Bank, Atlantic Capital Bank, Trustmark, Webster Bank, UMB Bank, Chatham Financial, and Wintrust.

swap is not hedging another swap (*i.e.,* if the second clause is satisfied), even if the swap is itself held for a speculative, investing, or trading purpose (*i.e.,* if the first clause is not satisfied).

The NPRM stated that ''[p]roposed § 39.6(c)(2) further provides, however, that a swap is disqualified from the end-user exception if it is held for a speculative, investing, or trading purpose, or if it hedges another swap unless that swap itself is held for hedging purposes.'' [64] In other words, proposed § 39.6(c)(2) provides that a swap would be disqualified from the end-user exception if either of two conditions were true: If the swap is held for a speculative, investing, or trading purpose, or if the swap hedges another swap unless that swap itself is held for hedging or mitigating purposes.

Accordingly, the Commission is revising the text of § 39.6(c)(2) to clarify the rule text in accordance with the intended purpose by replacing the conjunction ''or'' between clauses (i) and (ii) in § 39.6(c)(2) with the conjunction ''and.'' [65] This clarifies that, in order to qualify for the end-user exception, the swap must not be used for the purposes stated in § 39.6(c)(2)(i), and it must not be used for the purposes stated in § 39.6(c)(2)(ii). The final rule adopted by the Commission includes this change.

In response to Professor Greenberger's comment, the Commission does not believe that a swap that hedges an existing hedge is always speculative. The CEA does not require that the end-user exception be available only if the swap is a perfect or exact hedge. A swap originally designed to hedge commercial risk in compliance with the criteria of the rule may, over time, no longer fully serve its original hedging purpose. For example, if the underlying commercial risk hedged by the original swap or security-based swap no longer exists or changes as a result of changing market conditions or changes in the business needs of the electing counterparty, the risk now posed by the original swap or security-based swap itself is like other commercial risks that arose in the ordinary course of business because that swap originated as a hedge of commercial risk. Accordingly, as the Commission has stated that the entities shall evaluate the facts and circumstances existing at the time a hedge position is initiated [66] when electing the end-user exception, the entity should have the option to elect the end-user exception for swaps that hedge or mitigate risks created by the original swap or security-based swap, even if the original risk hedged no longer exists or has changed.

9. Portfolio and Dynamic Hedging, and Hedge Effectiveness Testing

In the NPRM, the Commission asked whether the end-user exception should apply to swaps that hedge or mitigate commercial risk on a single-risk basis or an aggregate-risk basis or to swaps that facilitate dynamic hedging. The Commission also asked whether hedge effectiveness should be addressed.

A number of commenters stated that portfolio hedging and dynamic hedging may hedge or mitigate commercial risk, and are commonly used by certain potential electing counterparties, and therefore the hedging techniques should be eligible for the end-user exception.[67] WGCEF, Shell, and ATA noted that commercial firms in the physical energy and other markets often hedge underlying physical assets and related positions on a portfolio or aggregate basis and also may dynamically hedge. WGCEF stated that in such cases it would be impracticable to have one-to-one matching of each swap to a specific physical transaction or asset for purposes of complying with the end-user exception. EEI & EPSA and WGCEF commented that excluding hedging of commercial risks on a portfolio basis or dynamic hedging could introduce uncertainty and limit the ability of non-financial entities to effectively manage their commercial risks.

Regarding hedge effectiveness, a number of commenters stated that it is important for entities to know at the time a transaction is executed whether the end-user exception applies. According to these commenters, an effectiveness test should not be used because it can only determine whether the swap appropriately hedges or mitigates commercial risk at the time of the test and not at the time of swap execution.[68] EDF Trading suggested that ''reasonable efforts to hedge commercial risks'' should be considered hedging. EDF Trading noted that tracking and analyzing the hedging or mitigating characteristics of a swap after its inception would be difficult because the hedging value of a swap fluctuates over time and is subject to market forces. EDF Trading further noted that such uncertain market fluctuations are the principal reason for entering into hedging transactions in the first place. EDF Trading believes that requiring an ongoing, periodic assessment of a hedge's effectiveness or purpose would be burdensome for commercial entities and would do little to reduce systemic risk.

CFI suggested that a requirement to report the related risk being hedged, which would be necessary to test hedge effectiveness, would impose an unnecessary burden on electing counterparties. In contrast, Better Markets and PMAA & NEFI commented that entities should be required to disclose what specific risks they are hedging and how the swap hedges those risks so that regulators can police the end-user exception. Furthermore, Better Markets stated that entities should have to certify that excepted swaps are not entered into for speculation either in whole or in part.

The Commission has determined that a swap that facilitates portfolio hedging or dynamic hedging may be eligible for the end-user exception if that swap hedges or mitigates commercial risk. The Commission acknowledges that portfolio hedging and dynamic hedging [69] can be economically appropriate to hedge or mitigate commercial risk, depending on the relevant facts and circumstances.

The Commission has also determined that parties will not be required to demonstrate hedge effectiveness or engage in periodic hedge effectiveness testing. The Commission agrees with commenters that entities need to know whether the swap is eligible for the end-user exception at the time it is executed and should not be subject to second guessing if subsequent hedge effectiveness testing finds that the swap does not, over time, hedge the intended risk as such ineffectiveness may be beyond the control of the electing counterparty. Furthermore, the Commission believes that such a

[64] 75 FR at 80752 (footnote omitted).

[65] The Commission notes that in the definition of ''hedge or mitigate commercial risk'' proposed by the Commission for purposes of defining ''major swap participant'' under Section 1a(33) of the CEA, there was no conjunction between clauses (i) and (ii). *See* Further Definition of ''Swap Dealer,'' ''Security-Based Swap Dealer,'' ''Major Swap Participant,'' ''Major Security-Based Swap Participant'' and ''Eligible Contract Participant,'' 75 FR 80174, 80214, 80217 (Dec. 21, 2010) (proposed § 1.3(ttt)(2)). However, the Commission added the conjunction in the final definition. *See* 77 FR 30596 at 30750 (May 23, 2012) (final § 1.3(kkk)(2)).

[66] *See* section II.C.9 herein.

[67] *See, e.g.,* EEI & EPSA, ATA, WGCEF, RESA, Peabody, Kraft, and American Public Power Association & Large Public Power Council.

[68] *See, e.g.,* ATA, APGA, Cravath, EDF Trading, and Kraft.

[69] Regarding commenters' queries about dynamic hedging, which WGCEF described as the ability to modify the hedging structure related to physical assets or positions when relevant pricing relationships applicable to that asset change, the Commission notes that qualification as bona fide hedging does not require that hedges, once entered into, must remain static. The Commission recognizes that entities may update their hedges periodically when pricing relationships or other market factors applicable to the hedges change.

requirement could potentially add costs and burdens with potentially limited added benefit.

Finally, the Commission has determined not to require entities to document and report the risk being hedged. The Commission believes that such a requirement would create a large volume of unique data that would be difficult to meaningfully review. Although the Commission has determined not to modify § 39.6 to address portfolio hedging or dynamic hedging at this time, the Commission recognizes that the end-user exception could be more easily abused in these contexts. The Commission intends to monitor use of the end-user exception and if such abuse becomes prevalent, it may impose appropriate hedge identification and/or hedge effectiveness testing or reporting requirements.

10. Swap-by-Swap or Swap Portfolio Approach

In a comment submitted prior to publication of the NPRM, NYCBA requested clarification as to whether all swaps entered into by a party, or only a certain percentage of the party's swap portfolio, must hedge or mitigate commercial risk for the party to qualify for the end-user exception. In proposed § 39.6, whether a commercial risk is being hedged or mitigated would be determined for each swap, not for all or a portion of a party's swap portfolio.

As noted above, Section 2(h)(7)(A)(ii) of the CEA provides that a swap shall not be subject to the clearing requirement if, among other things, one of the counterparties to the swap ''is using swaps to hedge or mitigate commercial risk * * *.'' The Commission does not believe that Congress intended this language to automatically apply to all swaps—no matter how numerous and no matter what their purpose—used by an entity that uses some swaps to hedge or mitigate commercial risk. Such an interpretation would extend the end-user exception beyond its purpose of facilitating the use of swaps for hedging or mitigating commercial risk. Conversely, the statutory language does not clearly limit the end-user exception to entities that use swaps solely to hedge or mitigate commercial risk. Implementation of Section 2(h)(7)(A)(ii) thus requires the Commission to determine how the provision should be applied to entities that use swaps to hedge or mitigate commercial risk but also for other purposes.

Broadly speaking, there are two possible ways to do this: Either on a swap-by-swap basis or based on an entity's overall portfolio of swaps. The former approach has a number of important advantages and the Commission therefore is adopting the swap-by-swap approach as proposed. This approach is consistent with the swap-by-swap clearing requirement in Section 2(h)(1) of the CEA. The portfolio approach would present numerous issues that would be difficult to overcome or would render the end-user exception less effective for achieving the stated goals of the Dodd-Frank Act. For example, if the Commission required that a certain minimum percentage of a party's swaps must hedge or mitigate commercial risk, the end-user exception would be unavailable to parties who do not reach the minimum threshold. This could prevent a large number of non-financial entities from using the end-user exception at all. It is unlikely that Congress intended such a result. In addition, if the Commission required a high percentage of a party's swap portfolio to hedge or mitigate commercial risk, potential electing counterparties could be more inclined to abuse the end-user exception and evade clearing by classifying non-hedging swaps as hedges to meet the threshold set forth in the rule. Another concern is that, if a party's swap portfolio satisfied the percentage requirement, the party could elect the end-user exception for all swaps, including swaps that do not hedge or mitigate commercial risk, thereby undermining the systemic risk reduction benefits of the clearing requirement. A swap-by-swap approach is thus consistent with Section 2(h)(7)(F), which authorizes the Commission to prescribe rules to prevent abuse of the end-user exception to the clearing requirement, and Section 2(h)(4)(A), which directs the Commission to prescribe rules as determined by the Commission to be necessary to prevent evasions of the clearing requirement.

The Commission also believes the percentage approach would be difficult to apply as a rule. In addition to determining whether each swap hedges or mitigates commercial risk to calculate a swap portfolio percentage, each such entity would need to repeatedly measure and report portfolio hedging percentages to maintain compliance. A percentage-of-portfolio test could lead to significant regulatory uncertainty given the difficulty of measuring the percentage of swaps that hedge or mitigate commercial risk over time as the portfolio changes.

11. Consistency Across Commission Regulations

The Commission asked in the NPRM whether the criteria for hedging or mitigating commercial risk should be consistent across all Commission regulations. Section 1a(33) of the CEA, which defines ''major swap participant,'' provides for an exclusion of certain swap positions held for ''hedging or mitigating commercial risk'' from the determination of whether an entity maintains a substantial position in swaps. For purposes of Section 1a(33) and the Commission's definition of ''major swap participant'' in § 1.3(hhh), the Commission has adopted § 1.3(kkk) to provide criteria for what constitutes ''hedging or mitigating commercial risk.'' [70]

A number of commenters recommended that the criteria for hedging or mitigating commercial risk be consistent across all Commission regulations. These commenters do not believe it is appropriate to have different hedging criteria under the ''major swap participant'' definition and end-user exception.[71] The ABA recommended that the Commission cross-reference the hedging criteria used in the ''major swap participant'' definition rather than include separate but identical criteria in the end-user exception to avoid the possibility of inadvertent or inconsistent amendments and interpretations.

The ''hedging or mitigating commercial risk'' criteria set forth in § 1.3(kkk) and § 39.6(c) are consistent. The Commission has determined that the criteria will remain as consistent as possible to facilitate consistent interpretation across the CEA and Commission regulations. However, application of the phrase ''hedging or mitigating commercial risk'' serves similar, but different purposes in the two rules. In addition, while the ''major swap participant'' definition allows for application of the criteria to financial entities, pursuant to the limitations in Section 3(h)(7)(C) of the CEA, the end-user exception does not. Accordingly, there is a reasonable possibility that the Commission may determine that the two criteria should be modified in different ways in the future. Therefore, the Commission has determined to publish the criteria in separate rules rather than incorporate them by reference.

[70] 77 FR 30596 at 30750 (May 23, 2012).

[71] *See, e.g.,* ABA, COPE, EMUS, ICBA, Reval, FHL Banks, Philip Morris, and EDF Trading.

D. Exemption of Small Banks, Savings Associations, Farm Credit System Institutions, and Credit Unions From the Definition of ''Financial Entity''

Section 2(h)(7)(C)(ii) of the CEA provides that the Commission ''shall consider whether to exempt from the definition of 'financial entity' small banks, savings associations, farm credit system institutions and credit unions including:

(I) Depository institutions with total assets of $10,000,000,000 or less;

(II) Farm credit system institutions with total assets of $10,000,000,000 or less; or

(III) Credit unions with total assets of $10,000,000,000 or less.''

For purposes of this discussion, all banks, savings associations, farm credit system institutions, and credit unions, regardless of size, are referred to as ''Section 2(h)(7)(C)(ii) institutions'' and the subgroup of Section 2(h)(7)(C)(ii) institutions that are eligible for exemption from the ''financial entity'' definition are collectively referred to as ''small financial institutions'' or ''SFIs.''

In the NPRM, the Commission requested comment regarding the appropriateness, breadth, risk issues, and limits of an exemption for Section 2(h)(7)(C)(ii) institutions. The Commission also asked whether there are appropriate measures for determining whether a Section 2(h)(7)(C)(ii) institution qualifies as a small financial institution other than the $10 billion or less total assets test referenced in the CEA.

A number of commenters supported defining SFIs broadly,[72] but AFR stated that only those small banks that engage in *de minimis* swap activity should be exempted. CII opposed extending the end-user exception to small Section 2(h)(7)(C)(ii) institutions because doing so ''would help preserve a hole in the oversight and regulation of derivatives that would likely be exploited to the detriment of the capital markets.''

A number of commenters [73] recommended that the Commission provide an exemption for SFIs because most small Section 2(h)(7)(C)(ii) institutions only offer swaps to customers in connection with loans for the customers' commercial business activities, and the related swaps hedge interest rate risk. These commenters noted that such swaps are not speculative in nature and are generally low risk. The small Section 2(h)(7)(C)(ii) institutions then enter into swaps with other financial institutions, often on a matched or back-to-back swap basis, to hedge the underlying risk of those customer swaps. According to these commenters, such matched or back-to-back swaps pose less risk to the small Section 2(h)(7)(C)(ii) institutions. For example, MBCA commented that ''[small Section 2(h)(7)(C)(ii) institutions] participate in the swaps markets for purposes of hedging interest rate risk on their balance sheets and offering swaps in connection with loans as a means to deliver long-term fixed rate financing to commercial borrowers.'' Also, these commenters noted that the swaps are often secured by assets funded by the loans and those assets are not liquid. The lack of liquidity of the security means that the small Section 2(h)(7)(C)(ii) institutions cannot simply pass on the security to a DCO as collateral for the matched swaps and must fund the collateral posted to DCOs in other ways.

Commenters also claimed that requiring small Section 2(h)(7)(C)(ii) institutions to clear swaps would impose inordinate costs on them. Chatham and Webster Bank noted that the fees charged by futures commission merchants to clear swaps could be significant for Section 2(h)(7)(C)(ii) institutions that are ineligible for the end-user exception and did not previously clear their swaps, especially those institutions that transact only a small number of swaps. They indicated that these fees generally take the form of a fixed minimum monthly fee, plus a ''ticket'' fee that varies with the volume of swap transactions processed.[74] ABA and ICBA commented that if small Section 2(h)(7)(C)(ii) institutions have to incur high fixed costs for clearing, they might refrain from entering into swaps to avoid having to incur such costs.

ABA and 19 Small Banks commented that Section 2(h)(7)(C)(ii) institutions should be exempted because applicable banking regulations and guidance require banks to establish internal risk management policies and procedures for all operations and activities, including, in some cases, for swap transactions. ABA also noted that banks are limited by the banking regulations applicable to them as to the amount of credit they can extend to each individual or entity to a specified percentage of capital and reserves.

FCC recommended that the Commission adopt rules that would permit farm credit system (FCS) associations and banks to exercise the end-user exception. FCC noted that FCS associations have, on average, total assets under $10 billion, and that FCS banks may have total assets exceeding $10 billion. According to FCC, these FCS institutions are cooperatives owned by their members, and a major function of each cooperative is to act on behalf of its members in the financial markets. FCC further noted that the members of these cooperatives are generally either non-financial entities or small financial institutions. FCC reasoned that, because an FCS cooperative essentially is taking the place of its members to face the larger financial markets on behalf of the members, the end-user exception that would be available to the cooperative's members should pass through to the cooperative. In addition, FCC noted that the Farm Credit Administration effectively regulates FCS institutions; FCS institutions only enter into safe, non-speculative swaps primarily related to member loans backed by collateral; and, unlike large banks, the FCS institutions are not as interconnected with other financial entities.

Regarding the criteria for determining whether a Section 2(h)(7)(C)(ii) institution is eligible for the exemption, a number of commenters recommended that the Commission allow institutions with more than $10 billion in assets to qualify for the exemption.[75] FCC commented that Congress provided the Commission with the authority to exempt financial institutions with more than $10 billion in assets. A number of commenters [76] suggested raising the threshold to $30 billion or higher. Frost, FTN, and MBCA recommended a $50 billion threshold. 19 Small Banks recommended that institutions with assets less than $50 billion and with uncollateralized exposure less than $1 billion should qualify for the exemption. These commenters suggested that historically, the swap activity of financial institutions with these higher asset levels is only a small percentage of the total swaps market

[72] *See, e.g.,* CUNA, FHL Banks, 19 Small Banks, MBCA, Frost, FTNF, ICBA, PCBB, and Reval.

[73] *See, e.g.,* ICBA, 19 Small Banks, MBCA, FCC, Chatham, FTNF, Trustmark, UMB, Webster Bank, and Wintrust.

[74] Chatham indicated that Section 2(h)(7)(C)(ii) institutions will spend between $2,500 and $25,000 in legal fees related to reviewing and negotiating clearing-related documentation, and a Section 2(h)(7)(C)(ii) institution will spend a minimum of between $75,000 and $125,000 per year on fees paid to each FCM with which it maintains a relationship. Webster Bank corroborated these numbers and also noted that a Section 2(h)(7)(C)(ii) institution will incur additional costs from DCO fees, which vary based on collateral delivered.

[75] *See, e.g.,* ABA, FCC, Frost, FTNF, MBCA, Devlin, FHL Banks, 19 Small Banks, Susquehanna Bancshares, Inc., The Private Bank and Trust Company, Commerce Bank, Atlantic Capital Bank, Trustmark, Webster Bank, UMB Bank, Chatham Financial, and Wintrust.

[76] ABA, Susquehanna Bancshares, Inc., The Private Bank and Trust Company, Commerce Bank, Atlantic Capital Bank, Trustmark, Webster Bank, UMB Bank, Chatham Financial, and Wintrust.

and therefore exempting them would not pose risk to the market or the financial system.

FHL Banks commented that the $10 billion asset level should be the baseline for the exemption. For Section 2(h)(7)(C)(ii) institutions with more assets, FHL Banks recommended that the Commission establish objective criteria for the exemption based on the risk that the institution poses to the U.S. financial system. For example, FHL Banks suggested that the Commission could look to the institution's current uncollateralized exposure as well as its potential future exposure.

Similarly, FCC commented that the systemic risk created by derivatives is not a function of an institution's asset size, but a function of the type and amount of derivative activity after netting offsetting positions and collateral. According to FCC, small institutions that enter into many risky trades pose greater risk to the financial system than larger institutions that carefully manage their derivatives portfolios. Accordingly, FCC recommended that the Commission focus on risk instead of asset size and recommended defining ''financial entity'' to mean entities with current uncollateralized exposure and potential future exposure of $3 billion in rate swaps and $1 billion in other major swap categories. FCC noted that such entities could be required to report compliance with the risk-based exposure test when electing the end-user exception. Similarly, CUNA recommended that the Commission should only allow entities with at least $10 billion in assets and that engage in a ''significant volume'' of swaps to qualify for the exemption.

The Commission is adopting § 39.6(d) to provide an exemption from the definition of ''financial entity'' for small Section 2(h)(7)(C)(ii) institutions. The Commission acknowledges that small Section 2(h)(7)(C)(ii) institutions, which tend to serve smaller, local markets, are well situated to provide swaps to the customers in their markets for the purpose of hedging commercial risk. The Commission also acknowledges that historically, as indicated by commenters, a large portion of the swaps executed by small Section 2(h)(7)(C)(ii) institutions with customers likely hedge interest rate risk associated with commercial loans. Many of these loans and the related swaps are not secured by cash or other highly liquid collateral, but by less liquid assets of the customer such as the property or inventory purchased with the loan proceeds. Based on the comments received, it appears that small Section 2(h)(7)(C)(ii) institutions typically hedge customer swaps by entering into matching swaps in the swap market, and if those matched swaps had to be cleared, the small Section 2(h)(7)(C)(ii) institutions would have to post margin to satisfy the requirements of the DCOs.[77] This arrangement could raise the costs for small Section 2(h)(7)(C)(ii) institutions of hedging the risks related to these types of customer swaps to the extent they need to fund the cost of the margin posted. In addition, the Commission acknowledges that some small Section 2(h)(7)(C)(ii) institutions may incur initial and annual fixed clearing fees and other expenses that may be incrementally higher relative to the small number of swaps they execute over a given period of time. Lastly, given the relatively low notional volume swap books held by small Section 2(h)(7)(C)(ii) institutions[78] and the commercial customer purposes these swaps satisfy, the Commission believes that swaps executed by small Section 2(h)(7)(C)(ii) institutions are what Congress was considering when it directed the Commission to consider an exemption from the ''financial entity'' definition for small financial institutions in Section 2(h)(7)(C)(ii) of the CEA. Accordingly, the Commission believes that it is appropriate to exempt small Section 2(h)(7)(C)(ii) institutions from the definition of ''financial entity'' in Section 2(h)(7)(C), thereby permitting small Section 2(h)(7)(C)(ii) institutions to elect not to clear swaps that are otherwise eligible for the end-user exception.[79]

Having determined that an exemption for small Section 2(h)(7)(C)(ii) institutions is appropriate, the Commission considered the comments received regarding whether to use the $10 billion total assets threshold identified in Section 2(h)(7)(C)(ii) of the CEA for determining what is a ''small'' Section 2(h)(7)(C)(ii) institution, or whether to use another test. The Commission has determined to limit the exemption to Section 2(h)(7)(C)(ii) institutions with $10 billion in total assets or less.[80] The Commission acknowledges that the $10 billion level is not required by the CEA. However, the Commission also believes that by specifically identifying that asset level three times, once for each type of Section 2(h)(7)(C)(ii) institution, Congress expressed its clear intent that the Commission should base its consideration of what is a ''small'' institution on the $10 billion asset level. The Commission therefore believes that it is appropriate to use the $10 billion level absent strong and convincing facts or circumstances supporting alternative measures.

The Commission believes that it would be inappropriate to exempt Section 2(h)(7)(C)(ii) institutions with substantially higher total asset amounts, such as the $30 billion, $50 billion, or higher levels recommended by several commenters. Congress has identified large financial institutions as more likely to cause systemic risk and has directed prudential regulators to consider prudential standards for ''large'' institutions having assets of $50 billion or more.[81] Although $30 billion in assets is less than the $50 billion level identified by Congress as being indicative of ''large'' financial institutions, $30 billion is three times greater than the $10 billion level identified by Congress in Section 2(h)(7)(C)(ii) as indicative of a ''small'' financial institution that should have the benefit of the exemption. While some commenters asserted that Section 2(h)(7)(C)(ii) institutions with assets in excess of $10 billion have commonly executed swaps with customers for the same purposes that smaller institutions do, and that these institutions pose less risk to the financial system than much larger institutions, these commenters did not provide specific data applicable to institutions with $10 billion or more of assets that would confirm these assertions.[82] Accordingly, commenters

[77] The Commission notes that if a Section 2(h)(7)(C)(ii) institution, regardless of its size, executes a swap with a customer/counterparty who properly elects the end-user exception for that swap, then neither the customer/counterparty nor the Section 2(h)(7)(C)(ii) institution needs to clear its position in that swap.

[78] See Section III.E hereof for information on the volume of swaps executed by Section 2(h)(7)(C)(ii) institutions.

[79] As noted by the 19 Small Banks in their comment letter, ''it is important to note that an SFI would not be exempt from clearing and trading for any speculative trades. Indeed, SFIs would have to meet the same conditions required for the end-user exception to mandatory clearing of swaps under Proposed Rule 39.6.''

[80] The Commission's $10 billion threshold is in harmony with the SEC's proposed approach to exempt SFIs from clearing security-based swaps that are subject to mandatory clearing. 75 FR 79992 at 80011 (Dec. 21, 2010).

[81] *See, e.g.,* Section 165 of the Dodd-Frank Act. (''In order to prevent or mitigate risks to the financial stability of the United States that could arise from the material financial distress or failure, or ongoing activities, of large, interconnected financial institutions, the Board of Governors shall, on its own or pursuant to recommendations by the Council under section 115, establish prudential standards for nonbank financial companies supervised by the Board of Governors and bank holding companies with total consolidated assets equal to or greater than $50,000,000,000.'')

[82] Furthermore, although not determinative as to what is ''small,'' the Commission is concerned that if Section 2(h)(7)(C)(ii) institutions with assets greater than $10 billion can avail themselves of the exemption, these larger institutions, which have

did not provide strong and convincing evidence that an asset level higher than $10 billion would be more appropriate than the $10 billion or less test for distinguishing ''small'' Section 2(h)(7)(C)(ii) institutions from others.

As a basic check on how many institutions could use the exemption at the $10 billion total assets level, the Commission looked at how many Section 2(h)(7)(C)(ii) institutions had total assets less than $10 billion and how many had more. Approximately 14,700 Section 2(h)(7)(C)(ii) institutions were operating in the United States as of December 31, 2011. Of those, approximately 120 had total assets greater than $10 billion.[83] The remaining 14,580 institutions had less than $10 billion in total assets. In other words, about 99 percent of banks, savings associations, farm credit system institutions, and credit unions will qualify as SFIs using the $10 billion or less test.[84] While this data did not influence the Commission's consideration of what constitutes a ''small'' Section 2(h)(7)(C)(ii) institution, it indicates that a high number of Section 2(h)(7)(C)(ii) institutions would be able to use the exemption for their hedging swap activities.

The Commission also considered whether it should adopt an alternative or additional uncollateralized exposure test, as recommended by some commenters. As noted above, several commenters recommended defining financial institutions that can use the exemption based on whether an institution's current and potential future uncollateralized swap exposure exceeds a certain threshold. Commenters suggested $1 billion or $3 billion as acceptable levels of uncollateralized exposure.

The Commission determined that an uncollateralized exposure test is not consistent with the statutory language of Section 2(h)(7)(C) of the CEA or the reasons for including a central clearing requirement in the Dodd-Frank Act. The Commission takes particular note of the fact that in Section 2(h)(7)(C)(ii), Congress focused exclusively on the size of the entity, based on total amount of assets, for measuring whether a financial institution should be exempt from the ''financial entity'' definition. Congress did not direct the Commission to consider whether uncollateralized risk exposure should be used for this purpose. Furthermore, it is not readily apparent how even full collateralization of exposure on a bilateral basis is an effective substitute for required clearing in the event of a severe financial shock such as occurred in 2008.

Commenters did not establish how an uncollateralized exposure test would be consistent with a definition of ''small'' financial institutions. An uncollateralized exposure test based on an entity's current and potential future exposure from swaps is not linked to the size of the financial institution or its significance to the financial system. For example, an uncollateralized exposure test allowing up to $1 billion in uncollateralized exposure could allow institutions with over $100 billion in assets to qualify as ''small.'' The Commission does not believe such a definition would be consistent with the intent of allowing an exemption for ''small'' Section 2(h)(7)(C)(ii) institutions from the clearing requirement. Had Congress intended such a result, it would have directed the Commission to consider exempting ''low-risk'' institutions.

In addition, the entity-by-entity uncollateralized exposure tests proposed by commenters may not capture the different risks non-cleared swaps may pose to the financial system. Any such test would need to carefully consider risk factors that the clearing requirement under the Dodd-Frank Act addresses, including opaque, non-public risk transference among market participants; buildup of risks in individual entities (such as the swap dealers with whom Section 2(h)(7)(C)(ii) institutions generally hedge swap exposure); effective measurement of risk in ever changing markets; and effective risk management frameworks for extreme market conditions. In this regard, the Commission does not believe that an entity-by-entity uncollateralized exposure test would account for: systemic risks that could arise if many Section 2(h)(7)(C)(ii) institutions are executing non-cleared swaps with only one swap dealer that fails, thereby concentrating uncleared counterparty risk; whether the Section 2(h)(7)(C)(ii) institutions hedging trades are creating other risks because they cannot perfectly match the risks being hedged;[85] rapidly changing market conditions; or a systemic liquidity freeze.

These risks are mitigated through central clearing. DCOs set margin levels and recalculate and collect margin amounts daily (sometimes intra-daily) based on changing market conditions. DCOs also use established and tested processes to swiftly calculate and cover losses resulting from a counterparty default, rapidly closing out or transferring the defaulted positions, and using the liquid collateral posted as margin by the defaulting party (plus other liquid assets available to the DCO, if necessary) to satisfy any losses incurred by the DCO in connection with the default. In this way, DCOs are able to make whole the market participants using its clearing services, notwithstanding a default by a member that may otherwise have been a counterparty to many of those market participants on a bilateral trading basis. As such, a swap clearing requirement protects the financial system from the risks that attend to the interconnectedness of the financial system. The interconnectedness of financial institutions, particularly large institutions, means that severe shocks to the financial system, such as occurred in late 2008, can cause liquidity to dry up in a matter of days or change the perceived credit quality of institutions overnight, vastly increasing their capital requirements. Such rapid changes can cause entities, particularly in the banking system, to fail with little or no forewarning. Notably, these risks are not necessarily ameliorated by a test that looks at uncollateralized exposure, because in the event of a severe financial shock, even swaps that are fully collateralized at the mark-to-market value on one day can fall into default the next as credit conditions change rapidly. In such event, the non-defaulting counterparties become exposed to losses that accumulate rapidly, which in turn can lead to their default.

Because the comments have not demonstrated why the Commission should interpret ''small'' to mean ''low-risk'' based upon an uncollateralized exposure calculus, and why such a calculus is an adequate substitute for the benefits provided by required clearing, the Commission declines to

greater capabilities than institutions with less than $10 billion of assets, are more likely to increase their swap activities at the regional or national level using the commercial advantage that the exemption will provide. Accordingly, it is possible that the amount of swap activity of these larger institutions could increase significantly over time if the exemption were available to them.

[83] Asset level data for banks and savings associations is available at fdic.gov, and for credit unions at ncua.gov. Data for farm credit system institutions was provided to the Commission by the Farm Credit Administration.

[84] In mid-2010, the most recent period for which Section 2(h)(7)(C)(ii) institution swap data could be obtained, approximately 1,015 Section 2(h)(7)(C)(ii) institutions had outstanding swap exposure. Of those institutions, 138 had total assets over $10 billion and 876 had total assets below $10 billion.

[85] For example, if the SFIs internally net large numbers of customer trades and then partially hedge the aggregate risk, or use hedging swaps based on interest rates or durations that do not match the customer swaps precisely, basis risk could be created that could become significant in another financial crisis.

adopt an uncollateralized exposure test at this time.

With regard to FCC's comments regarding FCS institutions, the Commission notes that if any such institution has total assets equal to or less than $10 billion, then it is a small financial institution that can elect the end-user exception. However, for those FCS institutions with assets greater than $10 billion, Section 2(h)(7)(C)(ii) of the CEA does not provide special consideration for cooperatives that meet the definition of ''financial entity'' and therefore the asset size limit applies to them.

The Commission recognizes that cooperatives exist to serve their member owners. The Commission further recognizes that, as described above, some cooperatives represent their members in the financial markets, and the members of some of these cooperatives are entities that could elect the end-user exception if acting alone. Accordingly, the Commission may consider providing exemptive relief for financial cooperatives through a separate action under its authority in Section 4(c) of the CEA.

E. Additional Considerations

1. Consultation With Other Regulatory Agencies; Jurisdictional Issues

Staff of the Federal Energy Regulatory Commission (FERC Staff) commented that ''the CFTC should interpret and apply the CEA as amended by Dodd-Frank to ensure that CFTC jurisdiction and FERC jurisdiction do not overlap.'' FERC Staff believes that, due to FERC's existing comprehensive regulation, ''Dodd-Frank terms should be interpreted as not applying to any contract or instrument traded in an RTO/ISO market pursuant to a FERC accepted or approved rate schedule or tariff. Applying Dodd-Frank swaps regulation to RTOs/ISOs is not only unnecessary but also potentially harmful.''

PG&E and SDG&E recommended that the Commission consult and coordinate with other regulatory agencies and state commissions (such as FERC and the California Public Utilities Commission (CPUC)) to assure regulatory consistency and comparability to the extent that hedging activities are already regulated. They noted that the costs and burdens associated with duplicative or inconsistent regulation would be passed through to ratepayers. As an example, PG&E noted that in certain instances, the CPUC may direct PG&E, as part of their obligation to serve customer load, to perform hedging on behalf of third parties, or assist municipalities in making decisions about hedging transactions. In such cases where the utility is directed to engage in certain derivative transactions by the CPUC, PG&E commented that these activities should be exempt from Commission regulation.

Finally, NRECA stated that the Commission should create a ''Commission-lite'' regime for non-financial entities that are already subject to regulation by energy or environmental federal agencies and do not have the infrastructure/personnel of financial entities.

The Commission has determined not to revise § 39.6 in response to these comments. The Commission does not believe the commenters have identified a conflict between § 39.6 and other regulations. Regulation 39.6 would not prevent entities from entering into swaps that do not hedge commercial risk; it would only identify when a swap may be excepted from the clearing requirement in accordance with the CEA. Accordingly, if other regulators require an entity to enter into swaps that do not hedge commercial risk, these entities can still execute those swaps and clear them as required under the CEA. However, the Commission recognizes that conflict between regulatory regimes may arise and the Commission plans to consult with other regulators as appropriate.

Regarding the FERC comment, the Commission notes that Section 722(f) of the Dodd-Frank Act [86] provides that the Commission may exempt transactions entered into pursuant to, inter alia, a tariff approved by FERC or the Public Utility Commission of Texas (which would include RTO/ISO transactions) if the Commission determines that such an exemption would be consistent with the public interest and the purposes of the CEA. Six RTO/ISOs [87] have submitted a petition for an order of exemption pursuant to Section 722(f) of the Dodd-Frank Act. The Commission intends to act on this petition expeditiously.

Regarding FCC's comment, Section 2(h)(7)(C)(ii) of the CEA expressly provides the Commission with the authority to exempt certain farm credit system institutions from the definition of ''financial entity'' along with other SFIs. Such exemptive authority would be unnecessary if the clearing requirement was not intended to apply to farm credit system institutions.

2. Implementation and Compliance

The Committee on Capital Markets Regulation (CCMR) and CME Group, Inc. (CME) recommended that the end-user exception be finalized early in the establishment of the clearing requirement process. CME commented that the end-user exception should be finalized early so companies know who will be subject to the clearing requirement.

Other commenters, including EEI & EPSA, Shell, EDF Trading, EEI, and CDEU, recommended that the implementation deadline for the Dodd-Frank Act be extended. EDF Trading and EEI recommended that the Commission allow a one-year ''transition period'' following the effective date of the Dodd-Frank Act to allow entities to comply with the new end-user exception regulations.

Finally, a number of commenters recommended that the Commission delay the § 39.6 reporting requirements. ATA recommended that the Commission key implementation of the end-user notification regime to the time when SDRs become operational. COPE suggested that the reporting requirement not be enforced until reporting systems have been largely standardized to avoid the development of multiple, bespoke software programs or systems for compliance. NEMA noted that significant terms have not been defined and that an overly aggressive compliance schedule could force many of its members out of the market for financial products because of their concern of being treated as a financial entity. NEMA also commented that parties must have sufficient time to make the requisite investment in information technology systems and to develop compliance plans.

The Commission has determined that § 39.6 will become effective 60 days after publication in the **Federal Register**. However, the Commission notes that compliance with § 39.6 will not be necessary or possible until swaps become subject to the clearing requirement. The Commission's proposed compliance and implementation schedule for the clearing requirement gives non-financial entities a minimum of 270 days to comply after the Commission issues a clearing requirement determination for a swap or group, category, type or class of swaps.[88] Moreover, the Commission has

[86] 7 U.S.C. 4(c)(6).

[87] The six RTO/ISOs are California Independent System Operator Corporation, Electric Reliability Council of Texas, Inc., ISO New England Inc., Midwest Independent Transmission System Operator, Inc., New York Independent System Operator, Inc., and PJM Interconnection, L.L.C.

[88] *See* 76 FR 58186 (Sept. 20, 2011) (Swap Transaction Compliance and Implementation Schedule: Clearing and Trade Execution Requirements under Section 2(h) of the CEA).

stated that no such clearing requirement determinations will become effective until the Commission adopts certain related rules.

3. Revocation of Election of the End-User Exception

IECA recommended that the Commission establish regulations that would make an election not to clear a swap irrevocable without the consent of both parties.

The Commission notes that Section 2(h)(7)(B) of the CEA provides that the application of the end-user exception is solely at the discretion of the counterparty to the swap that meets the conditions set forth in Section 2(h)(7)(A). Section 2(h)(7) does not address, however, whether the electing counterparty may revoke its election and choose to clear the swap. The Commission believes that any decision to change the clearing status of the swap after it is entered into is a contractual matter between the two parties.

III. Consideration of Costs and Benefits

A. Introduction

The regulations being adopted herein interpret and establish qualifying criteria for the end-user exception provided in Section 2(h)(7) of the CEA from the clearing requirement established in Section 2(h)(1)(A) of the CEA, as amended by the Dodd-Frank Act. An understanding of the costs and benefits of the end-user exception requires background understanding of the Section 2(h)(1)(A) clearing requirement.[89]

Prior to the passage of the Dodd-Frank Act, swap transactions were not required to be cleared. In the wake of the financial crisis of 2008, Congress adopted the Dodd-Frank Act, which, among other things, requires the Commission to determine whether a particular swap, or group, category, type or class of swaps, shall be required to be cleared.[90] Specifically, Section 723(a)(3) of the Dodd-Frank Act amended Section 2(h)(1)(A) of the CEA to make it ''unlawful for any person to engage in a swap unless that person submits such swap for clearing to a derivatives clearing organization that is registered under [the CEA] or a derivatives clearing organization that is exempt from registration under [the CEA] if the swap is required to be cleared.'' This clearing requirement is designed to reduce counterparty risk associated with swaps and, in turn, mitigate the potential systemic impact of such risk and reduce the likelihood for swaps to cause or exacerbate instability in the financial system.[91] It reflects a fundamental premise of the Dodd-Frank Act: The use of properly regulated and functioning central clearing can reduce systemic risk.

Notwithstanding the benefits of clearing, Section 2(h)(7) of the CEA provides for the end-user exception if one of the swap counterparties: ''(i) Is not a financial entity; (ii) is using swaps to hedge or mitigate commercial risk; and (iii) notifies the Commission, in a manner set forth by the Commission, how it generally meets its financial obligations associated with entering into non-cleared swaps.'' Section 2(h)(7)(C)(ii) directs the Commission to consider making the end-user exception available to small banks, savings associations, credit unions, and farm credit institutions, including those institutions with total assets of $10 billion or less, through an exemption from the statutory definition of ''financial entity.''[92] As noted above in section D hereof, for purposes of this final release, all banks, savings associations, farm credit system institutions, and credit unions, regardless of size, are referred to as ''Section 2(h)(7)(C)(ii) institutions'' and the subgroup of Section 2(h)(7)(C)(ii) institutions that are eligible for exemption from the ''financial entity'' definition are collectively referred to as ''small financial institutions'' or ''SFIs.''

In this final rulemaking, the Commission is adopting rules implementing the end-user exception. More specifically, the final rules: (1) Specify the content and manner to effect the required Commission notification (*i.e.,* the reporting requirements); (2) establish the criteria for determining whether a swap is ''hedging or mitigating commercial risk''; and (3) exclude SFIs from the definition of ''financial entity'' for purposes of Section 2(h)(7)(A)(i) of the CEA, making it possible for them to avail themselves of the end-user exception. It is the costs and benefits of this rulemaking that the Commission considers in the discussion that follows.

Important to the Commission's consideration of costs and benefits is that this rulemaking is permissive—that is, the election of the end-user exception is at the discretion of the counterparty to the swap that meets the requisite conditions set forth in the statute and the final rule. In addition, except for the reporting required for those electing the end-user exception set forth in § 39.6(b), the final rule imposes no substantive obligations on the electing parties. Rather, the final rule largely clarifies the statute it implements and provides specific criteria for certain key terms in the statute including ''financial entity'' and ''hedging or mitigating commercial risk.''

This notice also provides statutory interpretation and guidance to potential electing counterparties as to whether they are, for example, a ''financial entity.'' Although that term is defined in statute, the Commission's response to comments regarding application of the definition to certain types of entities should yield a substantial, if unquantifiable, benefit by providing clarity and reducing uncertainty about a market participant's status for purposes of determining the availability of the end-user exception. The added clarity provided by the Commission's statutory interpretation and guidance, although beyond the scope of the Commission's obligation to consider the costs and benefits of its regulations or orders under Section 15(a) of the CEA, should nevertheless promote greater confidence and integrity in the market.

In the NPRM, the Commission asked for public comment on the costs and benefits of the proposed regulations, and specifically invited comments on whether: (1) It would be difficult or prohibitively expensive for persons to report the information required under the proposed rule; (2) there are more feasible and cost effective ways for the Commission to receive notification regarding the use of the end-user exception; (3) the Commission should consider requiring electing counterparties to report additional types of information; (4) collecting notice information regarding use of the end-user exception through SDRs would create significantly greater burdens for some parties to swaps compared to others; and (5) the Commission should

[89] As previously noted, this section states: ''It shall be unlawful for any person to engage in a swap unless that person submits such swap for clearing to a [DCO] that is registered under this Act or a [DCO] that is exempt from registration under [the CEA] if the swap is required to be cleared.''

[90] *See* Section 2(h)(2) of the CEA, 7 U.S.C. 2(h)(2).

[91] When a bilateral swap is moved into clearing, the clearinghouse becomes the counterparty to each of the original participants in the swap. This standardizes counterparty risk for the original swap participants in that they each bear the same risk attributable to facing the clearinghouse as counterparty. In addition, clearing mitigates counterparty risk to the extent that the clearinghouse is a more creditworthy counterparty relative to those that each participant in the trade might have otherwise faced. Clearinghouses have demonstrated resilience in the face of past market stress. Most recently, they remained financially sound and effectively settled positions in the midst of turbulent events in 2007–2008 that threatened the financial health and stability of many other types of entities.

[92] *See* CEA 2(h)(7)(C)(ii).

extend the end-user exception to SFIs.[93] The Commission also asked for commenters to provide an explanation for any preferred alternative and data to support their comments.[94]

The Commission received numerous comments addressing various cost and benefit considerations of the proposed rule and sought to promulgate a final rule that will help swap market participants apply the end-user exception in a uniform and accurate manner, balance the tradeoff of costs and benefits associated with the exemption, and minimize reporting burdens on market participants who elect the exception while still providing the Commission the information that it needs to monitor the markets and use of the exception by market participants. The Commission adopted a number of the alternatives posed by commenters, particularly with regard to the final rule's reporting requirements.[95]

Informed by commenters, the discussion below considers the rule's costs and benefits as well as alternatives to the rule. The discussion concludes with a consideration of the rule's costs and benefits in light of the five factors specified in Section 15(a) of the CEA.

B. Requirement To Consider the Costs and Benefits of the Commission's Action Under Section 15(a) of the CEA

Section 15(a) of the CEA [96] requires the Commission to consider the costs and benefits of its actions before promulgating a regulation under the CEA or issuing certain orders. Section 15(a) further specifies that the costs and benefits shall be evaluated in light of five broad areas of market and public concern: (1) Protection of market participants and the public; (2) efficiency, competitiveness and financial integrity of futures markets; (3) price discovery; (4) sound risk management practices; and (5) other public interest considerations. The Commission considers the costs and benefits resulting from its discretionary determinations with respect to the Section 15(a) factors.

In the sections that follow, the Commission considers the costs and benefits of final § 39.6, namely: (1) The costs and benefits of the reporting requirements; and (2) the costs and benefits of the established criteria for determining whether a swap hedges or mitigates commercial risk for purposes of Section 2(h)(7)(A)(ii). The former is in large part amenable to quantification, but the latter is not due to a lack of data about the manner in which swaps are currently being used to hedge or mitigate commercial risk and the economic terms thereof. Nevertheless, the Commission provides qualitative consideration of the costs and benefits of its approach to establishing criteria for determining whether a swap hedges or mitigates commercial risk. Finally, as required by Sections 2(h)(7)(C)(ii) and 15(a) of the CEA, the Commission considers the costs and benefits of exempting SFIs with total assets of $10 billion or less from the definition of ''financial entity.''

The costs and benefits of the Commission's action in this rulemaking are measured against the level of costs and benefits that would exist absent this rulemaking. With respect to each of this rulemaking's three elements this is as follows:

- *Establishing the reporting requirements.* The requirement that counterparties availing themselves of the end-user exception provide notification to the Commission remains a statutory requisite to invoke the exemption, albeit one that is not self-executing.[97] Thus, the foundation against which this rulemaking's costs and benefits are measured is the minimum notification that the Commission could prescribe to meet the statutory requirement.
- *The ''hedge or mitigate commercial risk'' element.* Absent this rulemaking, ''hedging or mitigating commercial risk'' remains a statutory requisite to invoke the end-user exception.[98] This rulemaking clarifies the Commission's interpretation of the term for purposes of implementing and enforcing the CEA's statutory requirements. Thus, the foundation against which this rulemaking's costs and benefits are measured is the statutory requirement standing alone without the clarification that the rulemaking provides.
- *Excluding qualifying SFIs from the definition of ''financial entity.''* Absent this rulemaking, all financial entities as defined in Section 2(h)(7)(C) of the CEA, including all SFIs, are statutorily disqualified from the end-user exception pursuant to Section 2(h)(7)(A)(i) of the CEA, which specifies that to qualify for the end-user exception the counterparty must not be a financial entity. Thus, the foundation against which this rulemaking's costs and benefits are measured is the statutory requirement that SFIs, as financial entities, remain subject to the clearing requirement of Section 2(h)(1)(A) of the CEA.

Additionally, with respect to the second and third elements, the Commission considers the rulemaking's costs and benefits relative to alternatives besides that of abstaining from action. In the case of articulating reporting requirements, which is statutorily required, the Commission considers the rulemaking's costs and benefits relative to prescribing the minimum obligation.

As discussed in more detail below, the Commission is able to estimate certain reporting costs. The dollar estimates are offered as ranges with upper and lower bounds, which is necessary to accommodate the uncertainty that surrounds them. The Commission notes that the most likely outcome with respect to each estimate is a cost above the lower bound and below the upper bound. The costs and benefits associated with compliance with the Commission's interpretation of the term ''hedging or mitigating commercial risk,'' as well as those that result from the exemption for SFIs, however, are not readily susceptible to meaningful quantification because the requisite data is not available.

For example, to reasonably estimate quantifiable costs and benefits of compliance with this rule's interpretation of ''hedging or mitigating commercial risk,'' relative to alternatives, the Commission would need sufficient information to determine what swaps would be or would not be eligible for the end-user exception under different approaches considered by the Commission. This would require the Commission to identify a representative sample of market participants and collect detailed proprietary information regarding each swap position currently on their books, as well as the economic terms of the swap transactions entered into by those entities over a certain period of time. The Commission would also need detailed information regarding each sample member's business practices, current assets, anticipated acquisition or disposition of assets, and other financial positions related to their commercial operations to determine what swaps are ''hedging or mitigating commercial risk'' under various approaches considered by the Commission.

To estimate the costs and benefits related to the exemption for SFIs, the Commission would need similar information regarding SFIs, including detailed information regarding the swap positions and activities of those entities and sufficient knowledge of their business models, as well as their current and future assets, to determine what

[93] *See* 75 FR at 80750–80751.

[94] Id. at 80754.

[95] *See, e.g.,* sections II.B.1, 6, 7, 8, and 9 and II.C.6.

[96] 7 U.S.C. 19(a).

[97] *See* Section 2(h)(7)(A)(iii) of the CEA.

[98] *See* Section 2(h)(7)(A)(ii) of the CEA.

swaps constitute ''hedging or mitigating commercial risk.'' Again, the data necessary to calculate such estimates is largely proprietary, not available to the Commission, and was not provided by commenters. Notwithstanding these limitations, the Commission identifies and considers the costs and benefits of these aspects of the rule in qualitative terms.

C. Reporting Requirements

1. Introduction

Under Section 2(h)(7)(A)(iii) of the CEA, a condition to electing the end-user exception is that the electing counterparty ''notifies the Commission in a manner set forth by the Commission how it generally meets its financial obligations associated with entering into non-cleared swaps.'' Regulation 39.6(b) provides a mechanism for such reporting to the Commission and also requires the reporting counterparty to report that the end-user exception is being elected, who the electing counterparty is, and that the swap hedges or mitigates commercial risk. In addition, Section 2(j) of the CEA provides that any exception to the clearing requirement of Section 2(h)(1) of the CEA and the trading requirement of Section 2(h)(8) of the CEA are only available to an SEC Filer if the decision to enter into swaps subject to such exceptions has been reviewed by an appropriate committee of the governing body of the SEC Filer. Regulation 39.6(b)(1)(iii)(D)(*2*) would require reporting of confirmation by the SEC Filer that such review has occurred. The information reported under § 39.6(b) is needed for the Commission to be able to determine when the end-user exception is being used and to monitor compliance with the exception.

In the NPRM, the Commission contemplated swap-by-swap reporting of all the information required. As described below, the Commission received comments in response suggesting that the reporting requirements were burdensome and that less costly options may be available. In response to those comments, the Commission has made changes to the final rule that allow an electing counterparty to report certain information on an annual basis and to clarify that SEC Filers can obtain general approval of the end-user exception. The Commission believes that these changes will create significant cost reductions and benefits for electing and reporting counterparties, as described below. In addition, as described in more detail in Section II.B.3 above, the Commission has confirmed that the simple ''check-the-box'' reporting mechanism proposed in the NPRM may be used. A number of commenters agreed that this mechanism would greatly minimize the reporting burden and would provide standardized information that will be easily reviewable for regulatory purposes.

The discussion below of the rule's reporting requirements is divided into three parts. The first part covers the reporting requirements under the rule generally, the second addresses the SEC Filer reporting requirements, and the third provides specific cost estimates. Consideration of alternatives is incorporated within the first two parts.

2. Reporting Generally

In the NPRM, the Commission contemplated requiring the reporting counterparty to provide all information required under the rule on a swap-by-swap basis. The Commission received comments that swap-by-swap reporting of all information required to be reported under the rule could be more burdensome than necessary and that other alternatives are available, such as annual or other periodic reporting, submission of contracts or contract summaries, separate reduced reporting requirements for certain small entities, or reliance on contract representations by electing counterparties instead of reporting.[99]

After consideration of these comments, the Commission believes that certain information required to be reported by § 39.6(b) could be reported on an annual basis without significantly compromising its value to the Commission and the public, and that such an approach is likely to be more cost-effective. Therefore, in response to these comments, the Commission revised the rule to require reporting of the following for each swap for which the end-user exception is elected: (1) That the election of the exception is being made; (2) which party is the electing counterparty; and (3) certain information specific to the electing counterparty unless that information has already been provided by the electing counterparty through an annual filing. The third set of information comprises data that is likely to remain relatively constant for many electing counterparties and therefore can be reported less frequently.

In making this change in the final rule, the Commission believes that allowing the third set of information to be reported on either a swap-by-swap basis or on an annual basis is likely to mitigate reporting costs from the solely swap-by-swap approach proposed in the NPRM because entities will be able to select the most cost-effective option.

As an estimate of cost savings, the Commission expects that the annual report will take approximately 30 minutes to 90 minutes to complete, but then that information will not have to be reported on a swap-by-swap basis, generating incremental savings of one to five minutes per transaction. The Commission does not have adequate data to estimate these costs in the aggregate. However, the Commission believes that the number of swap transactions subject to this rule is likely to be quite large, and therefore, the aggregate savings of one to five minutes per transaction could be significant. Also, the approach has benefits for market participants generally in that the form of data provided to the Commission will enable it to exercise its regulatory oversight in an efficient and effective manner given the wide variety of different types of swaps and swap hedging strategies used by potential electing counterparties. Lastly, standardized reports make it more feasible for the Commission to conduct periodic auditing, which will be less costly to regulators than examining on a case-by-case basis possibly unstructured financial data or different contract security provisions submitted by electing counterparties.

The Commission considered the other reporting frequency and mechanism alternatives proposed in the comments, but other than the annual reporting option provided in § 39.6(b)(2) of the rule, determined not to adopt them for several reasons. First, as mentioned above, Section 2(h)(7)(A) of the CEA requires an electing counterparty to notify the Commission how the counterparty meets its financial obligations associated with entering into non-cleared swaps as a condition to electing the end-user exception. Accordingly, the requirement to report some information is statutory and beyond the discretion of the Commission. Second, for swaps that are subject to the clearing requirement but are not being cleared, the Commission needs notice that the end-user exception is being elected and certain other information to assess compliance with Sections 2(h)(1) and (2)(h)(7) of the CEA and § 39.6. Third, delivery of agreements to the Commission would be almost as burdensome as the check-the-box approach (and in some cases more so) and would provide information in non-standard formats that would be

[99] *See, e.g.,* Cravath, AGA, APGA, SFG, Noble, NCHSA, API, CDEU, Shell, SDG & E, Peabody, FHL Banks, NRECA, WSPP, IPA, COPE, WGCEF, EDF Trading, Hess, EEI & EPSA, API, IECA, and NMPF.

difficult to review for regulatory purposes. Standardized data, on the other hand, will facilitate effective review by the Commission. Fourth, given the low reporting burden under these rules and the general swap-by-swap reporting requirements in other regulations (*e.g.,* Part 45), the Commission does not believe that a special, lesser reporting requirement for smaller parties would result in a materially lower burden while still maintaining compliance with the CEA. And last, the Commission believes that the check-the-box reporting method, and addition of the annual reporting option described above (together with the fact that various other information will already be reported for each swap pursuant to other provisions of the CEA and other regulations promulgated thereunder), minimize the reporting burden.

EDF Trading, API, MarkitSERV, and COPE raised another concern about the costs of reporting. They commented that some potential electing counterparties may bear costs in order to implement new reporting systems to comply with the reporting requirements. The Commission notes that electing counterparties will only incur such costs if they engage in swaps with other electing counterparties. If the electing counterparty enters into swaps with a swap dealer or a major swap participant, the swap dealer or major swap participant will be the reporting counterparty.[100] Based on historical experience, the Commission believes that electing counterparties will generally enter into swaps with swap dealers and major swap participants, and therefore will not be responsible for reporting the swap-by-swap information required in this rule. Moreover, even in the absence of this rule, if electing counterparties entered into swaps with one another they would be required to implement reporting systems in order to meet other swap-by-swap reporting requirements in the CEA and Commission regulations promulgated thereunder. Therefore, the Commission believes that the large majority of costs to implement reporting systems are properly recognized as the result of swap-by-swap reporting requirements that are beyond the scope of this rule. Accordingly, this rule will only result in costs to modify those reporting systems in order to provide the additional information required by this rule.

NGSA, NRECA, IECA, and EEI recommended that the Commission provide a safe harbor from liability for firms who report on behalf of the electing counterparty. The Commission expects that if the electing counterparty has not filed an annual report to provide the information required in § 39.6(b)(1)(iii), the reporting counterparty may choose to conduct some measure of due diligence in order to develop a reasonable basis for believing that the information it reports on behalf of the electing counterparty is accurate and the swap is eligible for the end-user exception. These costs are likely to vary depending on the number of electing counterparties with whom each reporting counterparty transacts, and the amount of due diligence that they choose to conduct, which can vary substantially depending on whether the electing counterparty has done an annual filing, the number of swaps the reporting counterparty executes within a year, and how well the reporting party already knows the electing counterparty's financial strategies and policies. The Commission does not believe that there is sufficient data to estimate the burden hours that will result from this requirement, but believes that: (1) The cost is likely to be relatively low; and (2) such information will frequently be collected along with other information the reporting counterparty will gather from the electing counterparty as part of the process of executing the swap and reporting other details required by the CEA and Commission regulations. Moreover, it is important to consider these costs in light of the benefits achieved by the requirement. The Commission believes that the ''reasonable basis'' standard is likely to deter abuse of the end-user exception, which could mitigate risks and costs that market participants and the public might otherwise face. If the end-user exception were abused, it would lead to reduced clearing and counterparty protection. If such abuse became widespread, it could also reduce the ability of clearinghouses to mitigate the transfer of financial instability among counterparties, thereby increasing risks to the public.

Some commenters favored requiring more information regarding the types of collateral, exact collateral terms and arrangements, and swap contractual terms and provisions.[101] The Commission determined not to require additional information because, on the one hand, the information would be costly for counterparties to provide and on the other, any such requirement would provide little benefit because it would be difficult to capture much of this information in a parameterized form, making it challenging to review the information in a systematic way.

According to EMUS, the NPRM indicated that the notification requirement would apply to all affiliates, while the rule text indicated a notification requirement would apply only to finance affiliates. In response to EMUS, the Commission is revising proposed § 39.6(b)(3) to clarify that the notification requirement only applies to financial entities acting as affiliates. The Commission is also adding a requirement that electing counterparties report whether they are ''financial entities'' as defined in Section 2(h)(7)(C)(i) of the CEA that are nevertheless exempt from the definition of ''financial entity'' as described in § 39.6(d). For entities affected by these provisions, the total impact is the removal or addition of one check-box when reporting.

3. SEC Filers

In accordance with Section 2(j) of the CEA, the proposed rule required a committee of the board of directors (or equivalent body) of an SEC Filer to approve the decision not to clear the swap for which the end-user exception would be elected. The Commission received comments that requiring swap-by-swap board approval would impose excess costs and burdens on SEC Filers.[102] The Commission determined that any additional benefit of a swap-by-swap approval, as compared to a more general approval, was insufficient to justify such an approach and accordingly, has revised the final rule to only require reporting (in the annual or swap-by-swap filing) whether such committee has generally approved entering into swaps subject to an exception to the clearing and trading requirements. The Commission believes this change will mitigate the potential burdens commenters raised by allowing such committees to provide blanket or more limited approvals for the end-user exception on a periodic basis as they deem appropriate for such approval and in a manner that may be consistent with general corporate practice. At the same time, the reporting requirement, while limited, still confirms that a committee of the governing board of the SEC Filer using the end-user exception has

[100] *See* 77 FR 2136 at 2207 (Jan. 13, 2012) (Swap Data Recordkeeping and Reporting Requirements; final rule).

[101] *See, e.g.,* AFR, AFSCME, Better Markets, PMAA & NEFI, and Professor Greenberger.

[102] *See, e.g.,* Hess, EEI & EPSA, NGSA, CDEU, EMUS, SDG & E, WGCEF, Mr. Quinlivan, Cravath, AGA, EMUS, COPE, NYCBA, Shell, ATA, Noble, WSPP, IPA, Hess, IECA, EEI, PMAA & NEFI, CDEU, and NYCBA.

considered such exceptions as required by Section 2(j) of the CEA.

4. Cost Estimates [103]

The Commission lacks data to estimate the precise number of non-financial entities that may be eligible for the end-user exception, and therefore cannot estimate total reporting costs with great accuracy. However, for informational purposes, the Commission has endeavored, where feasible, to estimate quantifiable costs. It has done so by using assumptions to define what it believes to be reasonable parameters for various uncertainties. At times, as noted with more specificity in the discussion that follows, the uncertainties are such that costs are reasonably estimable only within a wide range. For the purposes of these estimates, the Commission assumes a total of 30,000 electing counterparties (which includes SFIs), and that approximately 1,000 of them will function as reporting counterparties in any given year. The Commission further estimates that approximately 125 swap dealers and major swap participants will function as reporting counterparties for swaps for which the end-use exception is elected each year. All of these reporting counterparties likely will need to modify their reporting systems in order to accommodate the additional data fields required by this rule. The Commission estimates that those modifications will create a one-time expense of approximately one to ten burden hours per entity, for a total of approximately 1,125 to 11,250 burden hours. The hourly wage for a senior programmer is $292, which means that the aggregate one-time cost for modifying reporting systems is likely to be between $328,811 and $3,288,110.[104]

Furthermore, the 29,000 electing counterparties who do not function as reporting counterparties may, at certain times, need to communicate information to their respective reporting counterparties in order to facilitate reporting. That information may include, among other things, whether the electing counterparty has filed an annual report pursuant to § 39.6(b)(2) and information to facilitate any due diligence that the reporting counterparty may conduct. These costs will likely vary substantially depending on the number of different reporting counterparties with whom an electing counterparty conducts transactions, how frequently the electing counterparty enters into swaps, whether the electing counterparty undertakes an annual filing, and the due diligence that the reporting counterparty chooses to conduct. Therefore, the Commission believes that it is very difficult to estimate these costs reliably at this time. However, the Commission has endeavored to do so given the concerns commenters expressed about relying on other parties to provide information and to report the information. Accordingly, the Commission estimates that non-reporting electing counterparties will incur between five minutes and ten hours of annual burden hours. The hourly wage for a compliance attorney is $320, which means that the annual per entity cost for communicating information to the reporting counterparty is likely to be between $27 and $3,210. Given the unknowns associated with this cost estimate noted above, the Commission does not believe this wide range can be narrowed at this time.

Also, the Commission estimates that approximately two-thirds of electing counterparties (or 20,000 electing counterparties) will choose to file an annual report pursuant to § 39.6(b)(2). The annual filing option was added in the final rule and therefore an estimate of costs related thereto was not included in the NPRM. The annual filing option will reduce reporting costs overall because it is less costly than swap-by-swap reporting. The Commission estimates that it will take an average of 30 minutes to 90 minutes to complete and submit this filing, for an aggregate total of 10,000 to 30,000 burden hours. The average hourly wage for a compliance attorney is $320, which means that the aggregate annual cost for submitting the annual report is likely to be approximately $3,200,000 to $9,600,000. Other costs and benefits associated with the rule's reporting requirements cannot be monetized at this time because the Commission lacks adequate information to do so.

The rule requires reporting of the following for each swap for which the end-user exception is elected: (1) That the election of the exception is being made; (2) which party is the electing counterparty; and (3) certain information specific to the electing counterparty unless that information has already been provided by the electing counterparty through an annual filing. The third set of information comprises data that is likely to remain relatively constant for many electing counterparties and therefore can be reported either on a transaction-by-transaction basis or through an annual report that is updated as necessary.

As a recurring expense, the reporting counterparty will have to report the information required in § 39.6(b)(1)(i) and (ii) for each swap and the information required in § 39.6(b)(1)(iii) for each swap only if the electing counterparty has not filed an annual report. To comply with § 39.6(b)(1)(i) and (ii), the reporting counterparty will be required to check one box indicating the end-user exception is being elected and complete one field identifying the electing counterparty. The Commission expects that this information will be entered into the appropriate reporting system concurrently with additional information that is required under the CEA and other Commission regulations promulgated thereunder. Therefore, each reporting counterparty is likely to spend 15 seconds to two minutes per transaction in incremental time entering the swap-by-swap information that is required in § 39.6(b)(1)(i) and (ii) into the reporting system. Regarding the § 39.6(b)(1)(iii) information, the Commission expects that, for the first swap conducted involving a particular electing counterparty, it will take approximately 30 minutes to 90 minutes to collect and submit the information required and then approximately one to five minutes to collect and submit this information for subsequent transactions with that same counterparty. The Commission does not have sufficient data to estimate the number of swaps that will be subject to this rule, so it is not possible to estimate these costs in the aggregate.

[103] As discussed above, the statute itself requires some level of reporting. Absent an ability to demarcate between the minimum reporting that the statute would require and that resulting from this rule, the Commission has estimated the costs attributable to this rule from a base of zero, recognizing that the costs attributable to its discretion in this action must necessarily start from some higher base. Accordingly the costs attributable to the Commission's action in this rulemaking are necessarily something below the estimates provided. Also, because the statute requires some reporting, the Commission has not articulated separate benefits attributable to this rulemaking. However, to the extent benefits distinguish this rule from considered alternatives, they are considered in the preceding discussion.

[104] All salaries in these calculations are taken from the 2010 SIFMA Report on Management and Professional Earnings in the Securities Industry. Annual wages were converted to hourly wages assuming 2,000 work hours per year (40 hours per week for 50 weeks), and then multiplying by 5.35 to account for bonuses, firm size, employee benefits and overhead. The remaining calculations used in these cost-benefit considerations are also derived from this source and modified in the same manner.

In addition, for each range of aggregate costs presented in this discussion, the lower bound would be the aggregate cost if every relevant entity experienced the minimum per entity cost, and the upper bound would be the aggregate cost if every relevant entity experienced the maximum per entity cost. It is highly improbable that every entity would experience either the minimum or the maximum per entity cost, and as a consequence, the actual aggregate cost to market participants is likely to lie somewhere in the midst of each range that has been estimated in this section.

D. Hedging or Mitigating Commercial Risk

1. Introduction

Regulation 39.6(c) provides a broad set of criteria for determining what constitutes hedging or mitigating commercial risk for the end-user exception to apply. The Commission's flexible set of criteria allows counterparties to use the end-user exception when appropriate given their specific circumstances. At the same time, the criteria are designed to prevent abuse of the end-user exception, which would hinder one of the primary goals of the Dodd-Frank Act: Moving swaps into central clearing, thereby reducing counterparty risk and its potential to create instability in the financial system.

Congress prescribed ''hedging or mitigating commercial risk'' as a condition for applying the end-user exception, without providing further statutory definition of its meaning. The Commission is exercising its discretion to do so. Thus, relative to the statutory requirement, the costs and benefits of the rule are those attributable to clarifying the Commission's understanding of the term for implementation and enforcement purposes rather than implementing and enforcing the condition without clarifying its interpretation. Relative to other alternatives that the Commission could have selected, the costs or benefits of the rule are generally a function of whether the Commission adopts a more- or less-inclusive approach in articulating what constitutes hedging or mitigating commercial risk for purposes of the end-user exception relative to the theoretically optimal level that Congress presumably intended the statutory language to effect.[105] In addition, a potential electing counterparty will incur some costs in applying the standard set forth in the rule to determine whether a specific swap qualifies as hedging or mitigating commercial risk. Each category—clarification costs and benefits, inclusion costs and benefits, and determination costs—is discussed below.

2. Clarification Costs and Benefits

As stated above, even in the absence of this rulemaking, ''hedging or mitigating commercial risk'' is a necessary condition for being eligible to claim the end-user exception with respect to a particular swap. By clarifying the Commission's interpretation of this term, this rule provides market participants with the benefit of greater regulatory certainty, which will reduce costs associated with, for example, legal opinions to interpret the term or the costs of foregoing the end-user exception to which market participants might otherwise be entitled.

3. Inclusion Costs and Benefits

Regulation 39.6(c)(1)(i) identifies six possible sources of commercial risk and sets forth an ''economically appropriate'' standard for assessing the correspondence between a given swap and the commercial risk that it hedges or mitigates.[106]

As noted above, the Commission has determined not to provide a bright-line definition of ''economically appropriate'' to allow greater flexibility in application of the standard. The Commission cannot anticipate and account for all of the types of potential electing counterparties, swaps, and strategies that might be used to hedge or mitigate commercial risk, so a bright-line approach not allowing for judgment and consideration of all relevant facts and circumstances would likely lead to outcomes in some circumstances that inappropriately include or exclude certain swaps from the end-user exception, particularly with respect to custom swaps and unique hedging strategies.[107] Therefore, the Commission did not adopt alternatives that relied on a bright-line approach.

In addition, the Commission described the six categories of commercial risk in a way that it believes are inclusive of the many different types of commercial risk that can be hedged or mitigated. At the same time, by delineating specific types of commercial risk that can be hedged or mitigated for the end-user exception to apply, the Commission has created boundaries that provide greater clarity for application of the exception and prevent abuse or evasion of the exception thereby reducing the costs that can result from uncertainty or abuse or evasion.

The Commission has determined that alternative approaches proposed by commenters that are significantly more or less inclusive assign undue weight to various costs and benefits that increase or decrease with varying degrees of inclusiveness. The ''management or reduction of risks'' standard proposed by SFG would create the possibility that swaps could be excepted from clearing when they are merely being used to ''manage'' risks. That approach would be contrary to the statute because it could include swaps that are used to increase risk rather than to hedge or mitigate commercial risks. On the other hand, as explained above in Section II.C.5, the ''congruence'' standard proposed by Better Markets would require ''an exact match'' between each component of commercial risk being hedged and the swap that hedges it. However, a hedge does not have to be economically perfect in order to reduce rather than increase risk. Moreover, commenters emphasized the prevalence and necessity of dynamic hedging strategies, which continually rebalance hedges in light of changes or anticipated changes in underlying positions and their alignment with the hedges that offset their risk.[108] In light of this, the Commission believes that the additional costs created by a ''congruence standard'' would not be justified by its benefits and therefore has not adopted that alternative.[109]

Several commenters suggested that excluding swaps that hedge or mitigate financial risks would prevent abuse of the end-user exception by making the exception unavailable for speculative swaps.[110] However, as stated above, the Commission acknowledges that there are various financial risks that may be commercial risks for potential electing counterparties. Section 2(h)(7) of the CEA clearly allows swaps used by qualifying entities to hedge or mitigate commercial risks to be excepted out of the clearing requirement. The

[105] In either case, costs and benefits are not readily quantifiable. Such quantification would require data and information that the Commission does not possess nor have at its disposal. This includes data regarding the number, characteristics, and notional value of swaps that are impacted by these decisions, as well as information about the required margin for the swaps if they are cleared or not cleared, the type and amount of collateral that counterparties require for the swaps, estimates for the affected firms of the cost of capital used to post margin, and pricing for cleared swaps and non-cleared swaps.

[106] In the alternative to meeting the requirements of § 39.6(c)(1)(i), a swap executed by an electing counterparty may also be eligible for the end-user exception if the swap qualifies as a bona fide hedge for purposes of an exception from position limits under the CEA as provided in § 39.6(c)(1)(ii), or if it qualifies for hedging treatment under FASB Accounting Standards Codification Topic 815 or under GASB Statement 53 as provided in § 39.6(c)(1)(iii). No comments raised cost/benefit issues regarding these two bases for electing the end-user exception other than supporting the benefits offered by including these additional alternatives.

[107] The Commission agrees with Kraft that ''[a]ny bright-line definition or exclusion, such as those previously discussed, would infringe on a swap counterparty's ability to effectively hedge or mitigate its commercial risk. * * *''

[108] *See, e.g.,* Kraft, RESA, WGCEF, Peabody, NRECA, American Public Power Association & Large Public Power Council, and EEI & EPSA.

[109] *See* section II.C.5 above.

[110] *See, e.g.,* Tobin, Sullivan, Fay & Grunebaum, CMOC, Skylands, IPM & CSA, and FMNJ.

Commission believes that imposing such a limitation on using the end-user exception for financial swaps without consideration of whether they in fact do hedge or mitigate commercial risk would be inconsistent with the statute, and therefore has not adopted that alternative and accordingly, this alternative is beyond the reach of consideration under Section 15(a) of the CEA.

Various commenters suggested that § 39.6(c)(2)(i), which prohibits use of the end-user exception for swaps used for the purpose of speculation, trading, and investing, would prevent use of the exception for swaps that hedge or mitigate commercial risk.[111] Some of these comments also indicate that the meaning of ''speculation, trading or investing'' is unclear, which could cause some regulatory uncertainty, leading participants to refrain from electing the end-user exception in appropriate circumstances or to avoid entering into some swaps that hedge or mitigate commercial risk altogether.

The Commission has addressed these concerns by clarifying how § 39.6(c)(2)(i) is to be applied in the context of the entire rule. As explained in greater detail in section II.C.7 above, the focus of the limitation is on the purpose of the swap for the potential electing counterparty, *i.e.,* if it is principally used for hedging or mitigating commercial risk as characterized in the rule, then the end-user exception may be elected notwithstanding how the swap may otherwise be characterized, but if it is used for speculative, trading or investing purposes with little or no intent to hedge or mitigate commercial risk, then the end-user exception is not available. Accordingly, the Commission believes that this provision, if applied as intended, provides a benefit to market participants by clarifying the circumstances under which they may claim the end-user exception in accordance with the general requirement in Section 2(h)(7)(A)(ii) of the CEA that the swap must ''hedge or mitigate commercial risk''.

4. Determination Costs

To avail themselves of the end-user exception, potential electing counterparties must determine whether the specific swap in question is being used to ''hedge or mitigate commercial risk'' under the rule.[112] The Commission expects that entities will incur direct costs in the form of personnel hours devoted to analyzing this question. The cost of determining whether a specific swap is being used to ''hedge or mitigate commercial risk'' will depend on the nature of the entity's hedging activities in the relevant situation. Some entities will incur relatively few costs in confirming that they are hedging or mitigating commercial risk. Others will incur little or no cost confirming that they are not covered by the definition. However, for some entities, especially those that use swaps to hedge in a variety of ways and circumstances, the determination could be more complex and may require that personnel with financial and legal expertise review the circumstances of the entity's swap activities to make the determination of whether the swap in question is being used to hedge or mitigate commercial risk.

Notably, entities would incur determination costs regardless of the terms of the rule, because they must in any event interpret the statutory definition to determine whether they, and the swap in question, are eligible. Thus, at a minimum, a significant portion of the costs discussed here are attributable to the inclusion in the Dodd-Frank Act of a restriction on eligible swaps to those that ''hedge or mitigate commercial risk,'' and not from any aspect of this rule. Indeed, the final rule mitigates these costs by providing guidance about the application of the statutory requirements.

The time and resources that must be expended by an entity on this exercise will vary considerably depending on a number of factors, including (1) whether the entity in question must determine whether it is a financial entity; (2) the number and diversity of swaps executed by the entity; and (3) the complexity of the swap strategies being used by the entity. The Commission did not receive any comments quantifying the costs that an entity may incur in making these determinations. The Commission believes that, for most entities and swaps, making the determinations necessary will involve little or no cost because the nature of the electing counterparty and the use of the swaps in the context of the rule will be readily apparent. The Commission also recognizes that for some swaps and entities that have mixed purposes or that have unique characteristics, there will be determination costs; and in limited cases, such costs could be significant. However, it is not possible to estimate such costs for the entire market because the Commission does not have available to it detailed data for the swap market that would be needed to make such an estimate and also because such determinations are highly fact specific and can vary substantially from one swap to the next.

E. Exemption for Small Financial Institutions

Section 2(h)(7)(C)(ii) of the CEA directs the Commission to consider exempting small banks, savings associations, farm credit institutions, and credit unions with $10 billion or less in total assets from the definition of ''financial entity.'' As discussed above, the Commission is adopting such an exemption in § 39.6(d).[113] The Commission notes that as of December 31, 2011, there were approximately 14,700 Section 2(h)(7)(C)(ii) institutions operating in the United States. Of those institutions, approximately 120 of them had total assets greater than $10 billion, while the remaining 14,580 institutions had less than $10 billion in total assets making them SFIs that could elect the end-user exception when using swaps to hedge or mitigate commercial risk.[114] In other words, about 99 percent of banks, savings associations, farm credit system institutions, and credit unions will qualify as SFIs using the $10 billion level.[115] In addition, analysis conducted by the Commission suggests that 99 percent of Section 2(h)(7)(C)(ii) institutions with less than $10 billion in total assets that had open swap positions had gross notional swap books of $2 billion or less. While this data did not influence the Commission's consideration of what constitutes a ''small'' Section 2(h)(7)(C)(ii) institution, it does indicate how many institutions may benefit from the exemption as adopted by the Commission.

Commenters suggested alternative approaches to the exemption for SFIs, such as asset test thresholds above $10 billion, or a test that focuses on uncollateralized exposure. However, commenters did not provide sufficient quantitative or qualitative evidence to persuade the Commission that a threshold greater than $10 billion in

[111] *See* section II.C.7 above.

[112] Entities will also have to determine whether or not they are financial entities according to Section 2(h)(7)(C) of the CEA. Such costs result from the requirements of the Dodd-Frank Act and therefore do not arise as a result of the exercise of discretion by the Commission.

[113] *See* Section II.D.

[114] Asset level data for banks and savings associations is available at *fdic.gov,* and credit unions at *ncua.gov.* Data for farm credit system institutions was provided to the Commission by the Farm Credit Administration.

[115] In mid-2010, the most recent period for which Section 2(h)(7)(C)(ii) institution swap data could be obtained, approximately 1,015 Section 2(h)(7)(C)(ii) institutions had outstanding swap exposure. Of those institutions, 138 had total assets over $10 billion and 876 had total assets below $10 billion.

assets would provide benefits that justify any corresponding costs. In the absence of compelling evidence for a threshold other than that which was suggested by Congress, the Commission has adopted the threshold identified in the statute.

F. Consideration of Section 15(a) Factors

1. Protection of Market Participants and the Public

The reporting requirements help to discourage abuse of the end-user exception by requiring electing counterparties to provide, or cause to be provided, information to the Commission that demonstrates compliance with the legal conditions for using the exception. This helps protect market participants and the public. If the end-user exception were abused or evaded (*i.e.,* if entities wrongfully avoided clearing and trading on an exchange swaps that were required to be cleared and traded), market participants would be exposed to additional counterparty risk. Moreover, the public could be exposed to systemic risk, and the costs associated with large-scale financial system failure, if large aggregate positions of non-cleared, speculative swaps were to accumulate in systemically important institutions.

Although reporting counterparties will incur reporting costs, the rule seeks to minimize these costs and provide flexibility as to the frequency at which the information is reported. The Commission has promulgated rules that require electing counterparties to provide, or cause to be provided, the limited information needed to effectively regulate the end-user exception and meet the statutory requirements. In addition, certain reporting requirements may be satisfied by submitting the required information on a swap-by-swap or annual basis. This enables entities to adopt reporting practices that reduce their reporting costs without compromising the Commission's ability to regulate the market.

The rules also help to protect market participants and the public because they permit boards of SEC Filers to approve swaps on a swap-by-swap or more general basis. The Commission believes that either basis is sufficient to ensure that members of the board are aware that the end-user exception may be elected and to ensure that such an election has been appropriately considered at the top of the corporate responsibility hierarchy. The Commission recognizes that swap-by-swap approval might reduce risk to market participants and the public to a somewhat greater degree than general approval, but it agrees with commenters that any such incremental improvement does not warrant the additional burden.

The ''reasonable basis'' standard required of reporting counterparties is likely to create some costs for market participants who are reporting entities.[116] The Commission expects that if a reporting counterparty is not the electing counterparty and is reporting all information on a swap-by-swap basis, reporting counterparties may choose to conduct some due diligence in order to verify that their counterparty and the swap meet the requirements for eligibility. However, the Commission expects that most reporting entities are likely to know their customers, which will mitigate any costs associated with due diligence. Moreover, these costs must be considered in light of the benefits of such a requirement, namely enhanced compliance with clearing requirements, which serves to protect public interests, as well as the competitiveness and integrity of swap markets.

Finally, as described above, the ''economically appropriate'' hedging standard, together with the six types of commercial risk and specific safe harbors for hedging or mitigating risk that are recognized in the rule, mitigates the risk that market participants could abuse the exception or evade the clearing requirement, which could increase counterparty risk and potentially harm market participants and the public.

2. Efficiency, Competitiveness, and Financial Integrity of Swap Markets

Section 2(h)(8) of the CEA provides that swaps that are subject to the clearing requirement shall be executed on a board of trade or swap execution facility unless no such board or facility makes the swap available for trading. Preventing abuse of the end-user exception promotes exchange trading as intended by the Dodd-Frank Act by ensuring that more swaps that are supposed to be cleared are in fact cleared. This is likely to increase liquidity for these swaps, which should promote competitiveness by increasing the number of market participants that offer certain swaps in any one place. It should also enhance the efficiency of swap markets by reducing the amount of time that market participants must spend looking for willing counterparties and receiving actionable quotes for such swaps.

Certain provisions of this rule, such as the information required to be reported, the requirement for board approval, and the requirement that reporting entities gather sufficient information to have a reasonable basis for concluding that their counterparty is eligible for the end-user exception, will discourage abuse of the exception, thereby promoting the financial integrity of swap markets and financial markets as a whole. Market participants should have confidence that swaps that are not being used to hedge or mitigate commercial risk will be cleared.

3. Price Discovery

As described in greater detail above in Section III.C.1, the Commission believes that the rule reduces the potential for abuse or evasion (which could result in reduced exchange trading and therefore reduced price discovery) while also giving effect to the statutory requirement to create an exception from clearing for non-financial entities and SFIs using swaps to hedge or mitigate commercial risk. To the extent that reducing abuse or evasion results in greater liquidity on boards of trade and swap execution facilities, it promotes improved price discovery.

4. Sound Risk Management Practices

The Commission believes that the rule will lead to sound risk management practices. By requiring that swaps be ''economically appropriate'' to the reduction of the commercial risks that they hedge or mitigate, the rule helps to ensure that changes in the value of non-cleared swaps that otherwise would be subject to clearing are largely offset by changes in the value of assets or liabilities that electing counterparties have or reasonably expect to have (*e.g.,* future changes in variable interest rates, foreign exchange rates, or the price of commodities). The offset should partially or fully ensure that the electing counterparty has sufficient resources to meet the financial commitments incumbent on them by virtue of their hedging positions.

Electing counterparties may be exposed to certain financial risks in the course of ordinary business, such as the risk of exchange rate fluctuations related to foreign transactions and interest rate risk that could impact a potential electing counterparty's cost of debt incurred for commercial business purposes. The rule promotes sound risk management practices by mitigating the cost of collateral for entities to use swaps to hedge these types of financial risks related to their commercial activities.

[116] *See, e.g.,* NGSA, Reval, RESA, NRECA, IECA, and EEI.

For SEC Filers, the governing board or equivalent body is directly responsible to shareholders for the financial condition and performance of the firm, and also has access to information that would give them a comprehensive picture of the company's financial condition and risk management strategies. Therefore, any oversight they provide to the firm's risk management strategies is likely to encourage sound practices. However, the requirement contemplated in the NPRM that boards approve decisions to exempt swaps from clearing on a swap-by-swap basis could have been difficult for some firms to operationalize, and therefore could have undermined a firm's ability to implement risk management strategies that take advantage of the end-user exception. In other words, there is a tradeoff between the risk management benefits associated with more direct and intimate board oversight, and the risk management costs of the same. The Commission believes that the addition of the option to approve use of the end-user exception on a broad basis, rather than swap by swap, effectively balances these concerns, retaining direct board involvement in the firm's decision to exercise the exemption, but in a manner that does not hinder the firm's ability to operationalize their risk management strategies.

5. Other Public Interest Considerations

For purposes of determining whether a swap hedges or mitigates commercial risk, the rule includes swaps that qualify for hedging treatment under Statement 53, Accounting and Financial Reporting for Derivative Instruments, issued by GASB. This change in the final rule expands the range of swaps that state and local government entities can except from the clearing requirement to provide a safe harbor for swaps that are bona fide hedges under Statement 53. As a consequence, the change helps to ensure that U.S. local governmental entities who use what are definitively hedging swaps under accounting standards are able to take advantage of the end-user exception for such purposes.

In addition, the Commission provides guidance in Section II.A.4 that foreign governments, foreign central banks and certain international financial institutions will not be subject to the clearing requirements of Section 2(h)(1) of the CEA as a matter of comity. This guidance is in the public interest because it is premised on the expectation that foreign regulators will reciprocate and provide similar relief to the Federal Government, the Federal Reserve Banks of the United States and the international financial institutions of which the United States is a member.

IV. Related Matters

A. Regulatory Flexibility Act

The Regulatory Flexibility Act (RFA) requires federal agencies, in promulgating regulations, to consider whether those regulations will have a significant economic impact on a substantial number of small entities and, if so, provide a regulatory flexibility analysis respecting the impact.[117] As noted in the NPRM, the regulations adopted herein would affect eligible contract participants (ECPs) and SDRs. The Commission has previously determined that neither ECPs nor SDRs are small entities for purposes of the RFA.[118] Accordingly, the Chairman, on behalf of the Commission, certified in the NPRM pursuant to 5 U.S.C. 605(b) that these regulations will not have a significant economic impact on a substantial number of small entities.

B. Paperwork Reduction Act

The Paperwork Reduction Act (PRA)[119] imposes certain requirements on Federal agencies (including the Commission) in connection with conducting or sponsoring any collection of information as defined by the PRA. An agency may not conduct or sponsor, and a person is not required to respond to, a collection of information unless it displays a currently valid control number. This rulemaking imposes new collection of information requirements within the meaning of the PRA. Accordingly, the Commission requested and the Office of Management and Budget (OMB) assigned a control number for the new collection of information: OMB control number 3038–0085. The Commission has submitted this final rule along with supporting documentation for OMB's review. Responses to this collection of information will be mandatory.

The Commission will protect proprietary information according to the Freedom of Information Act and 17 CFR part 145, ''Commission Records and Information.'' In addition, section 8(a)(1) of the CEA strictly prohibits the Commission, unless specifically authorized by the CEA, from making public ''data and information that would separately disclose the business transactions or market positions of any person and trade secrets or names of customers.'' The Commission is also required to protect certain information contained in a government system of records according to the Privacy Act of 1974, 5 U.S.C. 552a.

1. Information Provided by Reporting Entities/Persons

Regulation 39.6 will require an electing counterparty to provide or cause to be provided certain information about the swap to a registered SDR or, if no registered SDR is available to receive the information, the Commission in the form and manner specified by the Commission. The reporting will occur only once at the beginning of the swap life cycle. If one of the counterparties to the swap is a swap dealer or a major swap participant, the electing counterparty would cause such information to be reported by that swap dealer or major swap participant. The electing counterparty would act as the reporting counterparty only if its counterparty is not a swap dealer or a major swap participant.

As noted in the NPRM, the Commission estimates that there are approximately 30,000 non-financial entities that are counterparties to a swap in a given year. Of those entities, the Commission estimates that the majority will not be required to report under Regulation 39.6 because their counterparty will be a swap dealer or major swap participant. In that case, as described above, the swap dealer or major swap participant will be required to report on behalf of the electing counterparty. Also, the reporting under Regulation 39.6 is only required to be made one time for each swap, with no further notifications or other reporting required in subsequent years. Reducing the number of annual potential electing counterparties by these factors, the Commission estimates that there are approximately 1,000 electing counterparties who will be required to report in a given year. The Commission estimates that the report will require between 10 minutes and one hour of burden, per electing counterparty per year. The number of burden hours per electing counterparty may vary depending on various factors, such as the number of swaps entered into by that electing counterparty in the given year. Therefore, the number of estimated aggregate annual burden hours is between 167 and 1,000 hours.

2. Information Collection Comments

The Commission received a comment from the Electric Trade Associations stating that the Commission rulemakings under the Dodd-Frank Act constitute an accumulation of interrelated regulatory burdens and

[117] 5 U.S.C. 601 *et seq.*

[118] *See* 66 FR 20740 at 20743 (Apr. 25, 2001) (regarding ECPs) and 75 FR 80898 at 80926 (Dec. 23, 2010) (regarding SDRs).

[119] 44 U.S.C. 3501 *et seq.*

costs on nonfinancial small entities and the Commission should conduct a comprehensive analysis under the PRA and other statutes. However, the comment did not specifically address this rulemaking.

List of Subjects in 17 CFR Part 39

Business and industry, Reporting requirements, Swaps.

For the reasons stated in the preamble, amend 17 CFR part 39 as follows:

PART 39—DERIVATIVES CLEARING ORGANIZATIONS

■ 1. The authority citation for part 39 is revised to read as follows:

Authority: 7 U.S.C. 2 and 7a–1 as amended by Pub. L. 111–203, 124 Stat. 1376.

■ 2. Add § 39.6 to read as follows:

§ 39.6 Exceptions to the clearing requirement.

(a) *Non-financial entities.* (1) A counterparty to a swap may elect the exception to the clearing requirement under section 2(h)(7)(A) of the Act if the counterparty:

(i) Is not a ''financial entity'' as defined in section 2(h)(7)(C)(i) of the Act;

(ii) Is using the swap to hedge or mitigate commercial risk as provided in paragraph (c) of this section; and

(iii) Provides, or causes to be provided, the information specified in paragraph (b) of this section to a registered swap data repository or, if no registered swap data repository is available to receive the information from the reporting counterparty, to the Commission. A counterparty that satisfies the criteria in this paragraph (a)(1) and elects the exception is an ''electing counterparty.''

(2) If there is more than one electing counterparty to a swap, the information specified in paragraph (b) of this section shall be provided with respect to each of the electing counterparties.

(b) *Reporting.* (1) When a counterparty elects the exception to the clearing requirement under section 2(h)(7)(A) of the Act, one of the counterparties to the swap (the ''reporting counterparty,'' as determined in accordance with § 45.8 of this part) shall provide, or cause to be provided, the following information to a registered swap data repository or, if no registered swap data repository is available to receive the information from the reporting counterparty, to the Commission, in the form and manner specified by the Commission:

(i) Notice of the election of the exception;

(ii) The identity of the electing counterparty to the swap; and

(iii) The following information, unless such information has previously been provided by the electing counterparty in a current annual filing pursuant to paragraph (b)(2) of this section:

(A) Whether the electing counterparty is a ''financial entity'' as defined in section 2(h)(7)(C)(i) of the Act, and if the electing counterparty is a financial entity, whether it is:

(*1*) Electing the exception in accordance with section 2(h)(7)(C)(iii) or section 2(h)(7)(D) of the Act; or

(*2*) Exempt from the definition of ''financial entity'' as described in paragraph (d) of this section;

(B) Whether the swap or swaps for which the electing counterparty is electing the exception are used by the electing counterparty to hedge or mitigate commercial risk as provided in paragraph (c) of this section;

(C) How the electing counterparty generally meets its financial obligations associated with entering into non-cleared swaps by identifying one or more of the following categories, as applicable:

(*1*) A written credit support agreement;

(*2*) Pledged or segregated assets (including posting or receiving margin pursuant to a credit support agreement or otherwise);

(*3*) A written third-party guarantee;

(*4*) The electing counterparty's available financial resources; or

(*5*) Means other than those described in paragraphs (b)(1)(iii)(C)(*1*), (*2*), (*3*), or (*4*) of this section; and

(D) Whether the electing counterparty is an entity that is an issuer of securities registered under section 12 of, or is required to file reports under section 15(d) of, the Securities Exchange Act of 1934, and if so:

(*1*) The relevant SEC Central Index Key number for that counterparty; and

(*2*) Whether an appropriate committee of that counterparty's board of directors (or equivalent body) has reviewed and approved the decision to enter into swaps that are exempt from the requirements of sections 2(h)(1) and 2(h)(8) of the Act.

(2) An entity that qualifies for an exception to the clearing requirement under this section may report the information listed in paragraph (b)(1)(iii) of this section annually in anticipation of electing the exception for one or more swaps. Any such reporting under this paragraph shall be effective for purposes of paragraph (b)(1)(iii) of this section for swaps entered into by the entity for 365 days following the date of such reporting. During such period, the entity shall amend such information as necessary to reflect any material changes to the information reported.

(3) Each reporting counterparty shall have a reasonable basis to believe that the electing counterparty meets the requirements for an exception to the clearing requirement under this section.

(c) *Hedging or mitigating commercial risk.* For purposes of section 2(h)(7)(A)(ii) of the Act and paragraph (b)(1)(iii)(B) of this section, a swap is used to hedge or mitigate commercial risk if:

(1) Such swap:

(i) Is economically appropriate to the reduction of risks in the conduct and management of a commercial enterprise, where the risks arise from:

(A) The potential change in the value of assets that a person owns, produces, manufactures, processes, or merchandises or reasonably anticipates owning, producing, manufacturing, processing, or merchandising in the ordinary course of business of the enterprise;

(B) The potential change in the value of liabilities that a person has incurred or reasonably anticipates incurring in the ordinary course of business of the enterprise;

(C) The potential change in the value of services that a person provides, purchases, or reasonably anticipates providing or purchasing in the ordinary course of business of the enterprise;

(D) The potential change in the value of assets, services, inputs, products, or commodities that a person owns, produces, manufactures, processes, merchandises, leases, or sells, or reasonably anticipates owning, producing, manufacturing, processing, merchandising, leasing, or selling in the ordinary course of business of the enterprise;

(E) Any potential change in value related to any of the foregoing arising from interest, currency, or foreign exchange rate movements associated with such assets, liabilities, services, inputs, products, or commodities; or

(F) Any fluctuation in interest, currency, or foreign exchange rate exposures arising from a person's current or anticipated assets or liabilities; or

(ii) Qualifies as bona fide hedging for purposes of an exemption from position limits under the Act; or

(iii) Qualifies for hedging treatment under:

(A) Financial Accounting Standards Board Accounting Standards Codification Topic 815, Derivatives and Hedging (formerly known as Statement No. 133); or

(B) Governmental Accounting Standards Board Statement 53, Accounting and Financial Reporting for Derivative Instruments; and

(2) Such swap is:

(i) Not used for a purpose that is in the nature of speculation, investing, or trading; and

(ii) Not used to hedge or mitigate the risk of another swap or security-based swap position, unless that other position itself is used to hedge or mitigate commercial risk as defined by this rule or § 240.3a67–4 of this title.

(d) For purposes of section 2(h)(7)(A) of the Act, a person that is a ''financial entity'' solely because of section 2(h)(7)(C)(i)(VIII) shall be exempt from the definition of ''financial entity'' if such person:

(i) Is organized as a bank, as defined in section 3(a) of the Federal Deposit Insurance Act, the deposits of which are insured by the Federal Deposit Insurance Corporation; a savings association, as defined in section 3(b) of the Federal Deposit Insurance Act, the deposits of which are insured by the Federal Deposit Insurance Corporation; a farm credit system institution chartered under the Farm Credit Act of 1971; or an insured Federal credit union or State-chartered credit union under the Federal Credit Union Act; and

(ii) Has total assets of $10,000,000,000 or less on the last day of such person's most recent fiscal year.

Issued in Washington, DC, on July 10, 2012, by the Commission.

David A. Stawick,

Secretary of the Commission.

Note: The following appendices will not appear in the Code of Federal Regulations.

Appendices to End-User Exception to Mandatory Clearing of Swaps—Commission Voting Summary and Statements of Commissioners

Appendix 1—Commission Voting Summary

On this matter, Chairman Gensler and Commissioners Sommers, Chilton, O'Malia and Wetjen voted in the affirmative; no Commissioner voted in the negative.

Appendix 2—Statement of Chairman Gary Gensler

I support the final rule on the end-user exception to the clearing requirement for swaps. One of the primary goals of the Dodd-Frank Wall Street Reform and Consumer Protection Act (Dodd-Frank Act) was to lower risk to the interconnected financial system by requiring standardized swaps between financial entities to be cleared.

Congress provided that non-financial entities, such as farmers, ranchers, manufacturers and other end-users, should be able to choose whether or not to clear those swaps that hedge or mitigate commercial risks. The Commission's final rule implements this exception for non-financial entities, establishing criteria for hedging or mitigating commercial risk and imposing minimal reporting requirements for those swaps that come under the end-user exception. The final rule benefited from significant public input, including requiring that most of the information be reported annually, rather than transaction by transaction as had been proposed.

In the Dodd-Frank Act, Congress also directed the Commission to consider exempting from the definition of ''financial entity'' small financial institutions with total assets of $10 billion or less, thus making them eligible for the end-user exception. After considering the comments received on the end-user exception proposal, the Commission is exempting small financial institutions, including small banks, savings associations, farm credit system institutions and credit unions, at the $10 billion total asset level, as identified by Congress.

[FR Doc. 2012–17291 Filed 7–18–12; 8:45 am]

BILLING CODE 6351–01–P

FEDERAL REGISTER

Vol. 77 Thursday,

No. 139 July 19, 2012

Part III

Department of Veterans Affairs

Privacy Act of 1974; System of Records; Notices

DEPARTMENT OF VETERANS AFFAIRS

Privacy Act of 1974; System of Records

AGENCY: Department of Veterans Affairs.

ACTION: Notice of Amendment of System of Records, ''VA Compensation, Pension, Education, and Vocational Rehabilitation and Employment Records—VA'' (58VA21/22/28).

SUMMARY: As required by the Privacy Act of 1974 (5 United States Code (U.S.C.) 552a(e)(4)), notice is hereby given that the Department of Veterans Affairs (VA) proposes to modify an existing system of records, ''VA Compensation, Pension, Education, and Vocational Rehabilitation and Employment Records—VA'' (58VA21/22/28).

DATES: Comments on this amended system must be received no later than August 20, 2012. If no public comment is received during the period allowed for comments, the amended system will become effective August 20, 2012.

ADDRESSES: Written comments concerning the proposed system of records may be submitted through *www.Regulations.gov;* by mail or hand-delivery to the Director, Regulations Management (02REG), Department of Veterans Affairs, 810 Vermont Ave. NW., Room 1068, Washington, DC 20420; or by fax to (202) 273–9026. Copies of comments received will be available for public inspection in the Office of Regulation Policy and Management, Room 1063B, between the hours of 8:00 a.m. and 4:30 p.m., Monday through Friday (except holidays). Please call (202) 461–4902 for an appointment. (This is not a toll-free number.) In addition, during the comment period, comments may be viewed online through the Federal Docket Management System (FDMS) at *www.Regulations.gov.*

FOR FURTHER INFORMATION CONTACT: Michael F. Palmer, Program Analyst, Veterans Benefits Management Systems, Department of Veterans Affairs, 810 Vermont Avenue NW., Washington, DC 20420, (336) 251–0392.

SUPPLEMENTARY INFORMATION: This system of records contains information regarding applicants for and beneficiaries of benefits chiefly administered by the Veterans Benefits Administration (VBA). This system is a core system for VBA programs. This system of records does not directly address health or memorial benefits administered respectively by the Veterans Health Administration or the National Cemetery Administration, the other two of the three Administrations within VA. This system was first published on March 3, 1976, and last amended on April 27, 2010, to include the location of a new facility where active educational assistance records will be housed, and by the addition of routine use number 65.

The Department proposes to add the Veterans Benefits Management System (VBMS) to this existing system of records in the storage category. VBMS is an automated, fully electronic, Web-based claims processing system designed to serve as the cornerstone of VBA's transition to paperless claims processing. VBMS features the following electronic core capabilities: claim establishment, claim development, rating management, award management, and appeal management.

The report of intent to amend a current system of records and an advance copy of the proposed changes have been sent to the appropriate Congressional committees and to the Director of the Office of Management and Budget (OMB) as required by (5 U.S.C. 552a(r) (Privacy Act) and guidelines issued by OMB (65 FR 77677)), December 12, 2000.

Approved: June 13, 2012.

John R. Gingrich,

Chief of Staff, Department of Veterans Affairs.

58VA21/22/28

SYSTEM NAME:

Compensation, Pension, Education, and Vocational Rehabilitation and Employment Records-VA.

SYSTEM LOCATION:

Records are maintained at VA regional offices, VA centers, the VA Records Management Center (RMC), St. Louis, Missouri, the Data Processing Center at Hines, Illinois, the Corporate Franchise Data Center in Austin, Texas, the Information Technology Center at Philadelphia, PA., and Terremark Worldwide, Inc., Federal Hosting Facilities in Culpepper, VA, and Miami FL. Active records are generally maintained by the regional offices having jurisdiction over the domicile of the claimant. Active educational assistance records are generally maintained at the regional processing office having jurisdiction over the educational institution, training establishment, or other entity where the claimant pursues or intends to pursue training.

The automated individual employee productivity records are temporarily maintained at the VA data processing facility serving the office in which the employee is located. The paper record is maintained at the VA regional office having jurisdiction over the employee who processed the claim. Records provided to the Department of Housing and Urban Development (HUD) for inclusion on its Credit Alert Interactive Voice Response System (CAIVRS) are located at a data processing center under contract to HUD at Lanham, Maryland. Address locations of VA facilities are listed in the VA Appendix I and are also listed at *http://www2.va.gov/directory/guide/home.asp?isFlash=1.*

CATEGORIES OF INDIVIDUALS COVERED BY THE SYSTEM:

The following categories of individuals will be covered by this system.

1. Veterans who have applied for compensation for service-connected disability under 38 U.S.C. chapter 11.
2. Veterans who have applied for nonservice-connected disability under 38 U.S.C. chapter 15.
3. Veterans entitled to burial benefits under 38 U.S.C. chapter 23.
4. Surviving spouses and children who have claimed pension based on nonservice-connected death of a Veteran under 38 U.S.C. chapter 15.
5. Surviving spouses and children who have claimed death compensation based on service-connected death of a Veteran under 38 U.S.C. chapter 11.
6. Surviving spouses and children who have claimed dependency and indemnity compensation for service-connected death of a Veteran under 38 U.S.C. chapter 13.
7. Parents who have applied for death compensation based on service-connected death of a Veteran under 38 U.S.C. chapter 11.
8. Parents who have applied for dependency and indemnity compensation for service-connected death of a Veteran under 38 U.S.C. chapter 13.
9. Individuals who applied for educational assistance benefits administered by VA under title 38 U.S.C.
10. Individuals who applied for educational assistance benefits maintained by the Department of Defense (DoD) under 10 U.S.C. that are administered by VA.
11. Veterans who apply for training and employers who apply for approval of their programs under the provisions of the Emergency Veterans' Job Training Act of 1983, Public Law 98–77.
12. Any VA employee who generates or finalizes adjudicative actions using the Benefits Delivery Network (BDN) or the Veterans Service Network

(VETSNET) computer processing systems.

13. Veterans who apply for training and employers who apply for approval of their programs under the provisions of the Service Members Occupational Conversion and Training Act of 1992, Public Law 102–484.

14. Representatives of individuals covered by the system.

CATEGORIES OF RECORDS IN THE SYSTEM:

The record, or information contained in the record, may include identifying information (e.g., name, address, social security number); military service and active duty separation information (e.g., name, service number, date of birth, rank, sex, total amount of active service, branch of service, character of service, pay grade, assigned separation reason, service period, whether Veteran was discharged with a disability, reenlisted, received a Purple Heart or other military decoration); payment information (e.g., Veteran payee name, address, dollar amount of readjustment service pay, amount of disability or pension payments, number of nonpay days, any amount of indebtedness (accounts receivable) arising from title 38 U.S.C. benefits and which are owed to the VA); medical information (e.g., medical and dental treatment in the Armed Forces including type of service-connected disability, medical facilities, or medical or dental treatment by VA health care personnel or received from private hospitals and health care personnel relating to a claim for VA disability benefits or medical or dental treatment); personal information (e.g., marital status, name and address of dependents, occupation, amount of education of a Veteran or a dependent, dependent's relationship to Veteran); education benefit information (e.g., information arising from utilization of training benefits such as a Veteran trainee's induction, reentrance or dismissal from a program or progress and attendance in an education or training program); applications for compensation, pension, education and vocational rehabilitation benefits and training which may contain identifying information, military service and active duty separation information, payment information, medical and dental information, personal and education benefit information relating to a Veteran or beneficiary's incarceration in a penal institution (e.g., name of incarcerated Veteran or beneficiary, claims file number, name and address of penal institution, date of commitment, type of offense, scheduled release date, Veteran's date of birth, beneficiary relationship to Veteran and whether Veteran or beneficiary is in a work release or half-way house program, on parole or has been released from incarceration).

The VA employee's BDN, VETSNET or VBMS identification numbers, the number and kind of actions generated and/or finalized by each such employee, the compilation of cases returned for each employee.

AUTHORITY FOR MAINTENANCE OF THE SYSTEM:

Title 10 U.S.C. chapters 106a, 510, 1606 and 1607 and Title 38, U.S.C., section 501(a) and Chapters 11, 13, 15, 18, 23, 30, 31, 32, 33, 34, 35, 36, 39, 51, 53, and 55.

PURPOSE(S):

VA gathers or creates these records in order to enable it to administer statutory benefits programs to Veterans, Servicemembers, reservists, and their spouses, surviving spouses, and dependents, who file claims for a wide variety of Federal Veteran's benefits administered by VA. See the statutory provisions cited in ''Authority for maintenance of the system.''

ROUTINE USES OF RECORDS MAINTAINED IN THE SYSTEM, INCLUDING CATEGORIES OF USERS AND THE PURPOSES OF SUCH USES:

1. The record of an individual who is covered by this system or records may be disclosed to a Member of Congress, or staff person acting for the member when, the member or staff person requests the record on behalf of and at the written request of that individual.

2. Any information in this system may be disclosed to a Federal agency, upon its official request, to the extent that it is relevant and necessary to that agency's decision regarding: The hiring, retention or transfer of an employee; the issuance of a security clearance, the letting of a contract, or the issuance or continuance of a license, grant or other benefit given by that agency. However, in accordance with an agreement with the U.S. Postal Service, disclosures to the U.S. Postal Service for decisions concerning the employment of Veterans will only be made with the Veteran's prior written consent.

3. Any information in this system may be disclosed to a State or local agency, upon official request, to the extent that it is relevant and necessary to that agency's decision on: The hiring, retention or transfer of an employee, the issuance of a security clearance, the letting of a contract, or the issuance or continuance of a license, grant or other benefit by that agency including eligibility for unemployment compensation; provided, that if the information pertains to a Veteran, the name and address of the Veteran will not be disclosed unless the name and address is provided first by the requesting State or local agency.

4. VA may disclose on its own initiative any information in this system, except the names and home addresses of individuals, that are relevant to a suspected violation or reasonably imminent violation of law, whether civil, criminal or regulatory in nature and whether arising by general or program statute or by regulation, rule or order issued pursuant thereto, to a Federal, State, local, tribal, or foreign agency charged with the responsibility of investigating or prosecuting such violation, or charged with enforcing or implementing the statute, rule, regulation or order.

5. VA may disclose on its own initiative the names and addresses of individuals, that are relevant to a suspected violation or reasonably imminent violation of law, whether civil, criminal or regulatory in nature and whether arising by general or program statute or by regulation, rule or order issued pursuant thereto, to a Federal agency charged with the responsibility of investigating or prosecuting such violation or charged with enforcing or implementing the statute, regulation, rule or order.

6. The name and address of an individual, which is relevant to a suspected violation or reasonably imminent violation of law concerning public health or safety, whether civil, criminal or regulatory in nature and whether arising by general or program statute or by regulation, rule or order issued pursuant thereto, may be disclosed to any foreign, State or local governmental agency or instrumentality charged under applicable law with the protection of the public health or safety if a qualified representative of such organization, agency or instrumentality has made a written request that such name and address be provided for a purpose authorized by law.

7. The name, address, entitlement code (e.g., compensation or pension), period(s) of service, sex, and date(s) of discharge may be disclosed to any nonprofit organization if the release is directly connected with the conduct of programs and the utilization of benefits under title 38 U.S.C. Disclosures may be in the form of a computerized list.

8. Any information in this system, except for the name and address of an individual, may be disclosed to a Federal agency in order for VA to obtain information relevant to the issuance of a benefit under title 38 U.S.C. The name and address of an individual may be disclosed to a Federal agency under this routine use if they are required by the

Federal agency to respond to the VA inquiry.)

9. Any information in this system may be disclosed in connection with any proceeding for the collection of an amount owed to the United States by virtue of a person's participation in any benefit program administered by VA when in the judgment of the Secretary, or official generally delegated such authority under standard agency delegation of authority rules (38 CFR 2.6), such disclosure is deemed necessary and proper, in accordance with 38 U.S.C. 5701(b)(6).

10. The name and address of an individual, and other information as is reasonably necessary to identify such individual, may be disclosed to a consumer reporting agency for the purpose of locating the individual, or obtaining a consumer report to determine the ability of the individual to repay an indebtedness to the United States arising by virtue of the individual's participation in a benefits program administered by the VA, provided that the requirements of 38 U.S.C. 5701(g)(2) have been met.

11. The name and address of an individual, and other information as is reasonably necessary to identify such individual, including personal information obtained from other Federal agencies through computer matching programs, and any information concerning the individual's indebtedness to the United States by virtue of the person's participation in a benefits program administered by VA, may be disclosed to a consumer reporting agency for purposes of assisting in the collection of such indebtedness, provided that the provisions of 38 U.S.C. 5701(g)(4) have been met.

12. Any information in this system, including available identifying information regarding the debtor, such as name of debtor, last known address of debtor, VA insurance number, VA loan number, VA claim number, place of birth, date of birth of debtor, name and address of debtor's employer or firm and dates of employment may be disclosed, under this routine use, except to consumer reporting agencies, to a third party in order to obtain current name, address, locator, and credit report in connection with any proceeding for the collection of an amount owed to the United States by virtue of a person's participation in any VA benefit program when in the judgment of the Secretary such disclosure is deemed necessary and proper. This purpose is consistent with the Federal Claims Collection Act of 1966 (Pub. L. 89–508, 31 U.S.C. 951–953 and 4 CFR parts 101–105 and 38 U.S.C. 5701(b)(6)).

13. Any information in this system, including the nature and amount of a financial obligation, may be disclosed to a debtor's employing agency or commanding officer so that the debtor-employee may be counseled by his or her Federal employer or commanding officer and to assist in the collection of unpaid financial obligations owed VA.

14. Payment information may be disclosed to the Department of the Treasury, in accordance with its official request, to permit delivery of benefit payments to Veterans or other beneficiaries.

15. Medical information may be disclosed in response to a request from the superintendent of a State hospital for psychotic patients, a commissioner or head of a State department of mental hygiene, or a head of a State, county or city health department or any fee basis physician or sharing institution in direct connection with authorized treatment for a Veteran, provided the name of the individual to whom the record pertains is given and the information will be treated as confidential, as is customary in civilian professional medical practice.

16. The name, address, VA file number, effective date of compensation or pension, current and historical benefit pay amounts for compensation or pension, service information, date of birth, competency payment status, incarceration status, and social security number of Veterans and their surviving spouses may be disclosed to the following agencies upon their official request: DoD; Defense Manpower Data Center; Marine Corps; Department of Homeland Security; Coast Guard; Public Health Service; National Oceanic and Atmospheric Administration and Commissioned Officer Corps in order for these departments and agencies and VA to reconcile the amount and/or waiver of service, department and retired pay. These records may also be disclosed as a part of an ongoing computer-matching program to accomplish these purposes. This purpose is consistent with 10 U.S.C. 12316, 38 U.S.C. 5304 and 38 U.S.C. 5701.

17. The amount of pension, compensation, dependency and indemnity compensation, educational assistance allowance, retirement pay and subsistence allowance of any individual identified to VA may be disclosed to any person who applies for such information.

18. Identifying, personal, payment and medical information may be disclosed to a Federal, State, or local government agency at the request of a Veteran in order to assist the Veteran and ensure that all of the title 38 U.S.C. or other benefits to which the Veteran is entitled are received. This information may also be disclosed upon the request from a Federal agency, or to a State or local agency, provided the name and address of the Veteran is given beforehand by the requesting agency, in order to assist the Veteran in obtaining a non-title 38 U.S.C. benefit to which the Veteran is entitled. These records may also be disclosed as part of an ongoing computer-matching program to accomplish this purpose.

19. Any information in this system, which directly affects payment or potential payment of benefits to contesting claimants, including parties claiming an apportioned share of benefits, may be coequally disclosed to each affected claimant upon request from that claimant in conjunction with the claim for benefits sought or received.

20. Any information in this system, such as identifying information, nature of a claim, amount of benefit payments, percentage of disability, income and medical expense information maintained by VA which is used to determine the amount payable to recipients of VA income-dependent benefits and personal information, may be disclosed to the Social Security Administration (SSA), upon its official request, in order for that agency to determine eligibility regarding amounts of social security benefits, or to verify other information with respect thereto. These records may also be disclosed as part of an ongoing computer-matching program to accomplish this purpose.

21. VA may disclose an individual's identifying information to an educational institution, training establishment, or other entity which administers programs approved for VA educational assistance in order to assist the individual in completing claims forms, to obtain information necessary to adjudicate the individual's claim, or to monitor the progress of the individual who is pursuing or intends to pursue training at the request of the appropriate institution, training establishment, or other entity administrating approved VA educational programs or at the request of the Veteran.

22. Medical data (excluding the name and address of a Veteran unless the name and address are furnished by the requestor) may be disclosed to epidemiological and other research facilities approved by the Under Secretary for Health to obtain data from those facilities necessary to assist in medical studies on Veterans for VA or

for any research purposes determined to be necessary and proper by the Under Secretary for Health.

23. The name(s) and address(es) of a Veteran may be disclosed to another Federal agency or to a contractor of that agency, at the written request of the head of that agency or designee of the head of that agency for the purpose of conducting government research necessary to accomplish a statutory purpose of that agency.

24. Any information in this system relevant to a Veteran's claim such as the name, address, the basis and nature of a claim, amount of benefit payment information, medical information and military service and active duty separation information may be disclosed at the request of the Veteran to accredited service organizations, VA-approved claims agents and attorneys acting under a declaration of representation so that these individuals can aid Veterans in the preparation, presentation and prosecution of claims under the laws administered by VA.

25. Identifying and payment information may be disclosed, upon the request of a Federal agency, to a State or local government agency, to determine a beneficiary's eligibility under programs provided for under Federal legislation and for which the requesting Federal agency has responsibility. These records may also be disclosed as a part of an ongoing computer-matching program to accomplish these purposes. This purpose is consistent with 38 U.S.C. 5701.

26. Any information in this system such as the amount of benefit or disability payments and medical information may be disclosed in the course of presenting evidence to a court, magistrate, or administrative authority, in matters of guardianship, inquests, and commitments, to private attorneys representing Veterans rated incompetent in conjunction with issuance of Certificates of Incompetency, and to probation and parole officers in connection with court-required duties.

27. Any information in this system including medical information, the basis and nature of claim, the amount of benefits and personal information may be disclosed to a VA Federal fiduciary or a guardian ad litem in relation to his or her representation of a Veteran only to the extent necessary to fulfill the duties of the VA Federal fiduciary or the guardian ad litem.

28. Any relevant information (including changes in disability ratings) may be disclosed to the DOJ and United States Attorneys in the defense or prosecution of litigation involving the United States, and to Federal agencies upon their request in connection with review of administrative tort claims and potential tort claims filed under the Federal Tort Claims Act, 28 U.S.C. 2672, the Military Claims Act, 10 U.S.C. 2733, and other similar claims statutes.

29. Any information in this system including the name, social security number, date of birth, delimiting date and remaining entitlement of VA educational benefits, may be disclosed to the Department of Education (ED) upon its official request, or contractor thereof, for specific use by the ED to validate information regarding entitlement to VA benefits which is submitted by applicants who request educational assistance grants from the ED. The ED or contractor thereof will not use such information for any other purpose. These records may also be disclosed as part of an ongoing computer-matching program to accomplish this purpose.

30. VA may, at the request of the individual, disclose identifying information of an individual who is pursuing or intends to pursue training at an educational institution, training establishment, or other entity which administers programs approved for VA educational assistance in order for the VA to obtain sufficient information necessary to pay that individual or the educational or training establishment the correct monetary amounts in an expeditious manner. However, information will not be provided under this routine use to an educational institution, training establishment, or other entity when the request is clearly an attempt by that establishment to seek assistance in collection attempts against the individual.

31. Identifying information and information regarding the induction, reentrance and dismissal of a disabled Veteran from a vocational rehabilitation program may be disclosed at the request of the Veteran to a VA-approved vocational rehabilitation training establishment to ensure that the trainee receives the maximum benefit from training.

32. Identifying information and information regarding the extent and nature of a Veteran's disabilities with respect to any limitations to be imposed on the Veteran's vocational programs may be disclosed at the request of the Veteran to a VA-approved vocational rehabilitation-training establishment to ensure that the trainee receives the maximum benefit from training.

33. Information regarding the type and amount of training/education received, and the name and address of a Veteran, may be disclosed at the request of a Veteran to local and State agencies and to prospective employers in order to assist the Veteran in obtaining employment or further training.

34. The name, claims file number and any other information relating to a Veteran's or beneficiary's incarceration in a penal institution and information regarding a dependent's right to a special apportionment of the incarcerated individual's VA benefit payment may be disclosed to those dependents who may be eligible for entitlement to such apportionment in accordance with 38 U.S.C. 5313, 5307.

35. The name, claims file number and any other information relating to an individual who may be incarcerated in a penal institution may, pursuant to an arrangement, be disclosed to penal institutions or to correctional authorities in order to verify information concerning the individual's incarceration status. The disclosure of this information is necessary to determine that individual's continuing eligibility as authorized under 38 U.S.C. 5313, 5307. These records may also be disclosed as part of an ongoing computer-matching program to accomplish this purpose.

36. Identifying information, except for the name and address of a Veteran, may be disclosed to a State agency for the purpose of conducting a computer match to determine if income and employment data are being properly reported to VA and to detect the unwarranted payment of benefits under title 38 U.S.C.

37. Identifying, disability, and award (type, amount and reasons for award) information may be released to the Department of Labor (DOL) in order for the DOL to conduct a computer matching program against the Office of Workers' Compensation Programs Federal Employees Compensation File, DOL/ESA–13, published in 46 FR 12357 on February 13, 1981. This match will permit the DOL to verify a person's eligibility for DOL payments as well as to detect situations where recipients may be erroneously receiving concurrent multiple payments from the DOL and VA, to identify areas where legislative and regulatory amendments directed toward preventing overpayments are needed, and to collect debts owed to the United States Government. This matching program is performed pursuant to the DOL Inspector General's authority under Public Law 95–452, section 4(a) to detect and prevent fraud and abuse. This disclosure is consistent with 38 U.S.C. 5701(b)(3).

38. The beneficiary's name, address, social security number and the amount (excluding interest) of any indebtedness waived under 38 U.S.C. 5302, or compromised under 4 CFR part 103 may be disclosed to the Treasury Department, Internal Revenue Service (IRS), as a report of income under 26 U.S.C. 61(a)(12).

39. Identifying information, including social security number, except for the name and address, may be disclosed to a Federal, State, County or Municipal agency for the purpose of conducting computer matches to obtain information to validate the entitlement of an individual, who is receiving or has received Veterans' benefits under Title 10 or Title 38, U.S.C. The name and address of individuals may also be disclosed to a Federal agency under this routine use if required by the Federal agency in order to provide information.

40. Identifying information, including the initials and abbreviated surname, the social security number, the date of birth and coding indicating the category of the individual's records, the degree of disability, the benefit program under which benefits are being paid and the computed amount of VA benefits for a calendar year may be released to the Department of the Treasury, and IRS, in order for IRS to conduct a computer matching program against IRS Forms 1040, Schedule R, Credit for the Elderly and the Permanently and Totally Disabled. This match will permit IRS to determine the eligibility for and the proper amount of Elderly and Disabled Credits claimed on IRS Form 1040, Schedule R. This matching program is performed pursuant to the provisions of Internal Revenue Code Section 7602. This disclosure is consistent with 38 U.S.C. 5701(b)(3).

41. Identifying information, such as name, social security number, VA claim number, date and place of birth, etc., in this system may be disclosed to an employer or school having information relevant to a claim in order to obtain information from the employer or school to the extent necessary to determine that eligibility for VA compensation or pension benefits continues to exist or to verify that there has been an overpayment of VA compensation or pension benefits. Any information in this system also may be disclosed to any of the above-entitled individuals or entities as part of ongoing computer matching programs to accomplish these purposes.

42. The name of a Veteran, or other beneficiary, other information as is reasonably necessary to identify such individual, and any other information concerning the individual's indebtedness by virtue of a person's participation in a benefits program administered by VA, may be disclosed to the Treasury Department, IRS, for the collection of Title 38, U.S.C. benefit overpayments, overdue indebtedness, and/or costs of services provided to an individual not entitled to such services, by the withholding of all or a portion of the person's Federal income tax refund.

43. Veterans' addresses which are contained in this system of records may be disclosed to the Defense Manpower Data Center, upon its official request, for military recruiting command needs, DoD civilian personnel offices' mobilization studies and mobilization information, debt collection, and Individual Ready Reserve Units' locator services.

44. The name, address, VA file number, date of birth, date of death, social security number, and service information may be disclosed to the Defense Manpower Data Center. DoD will use this information to identify retired Veterans and dependent members of their families who have entitlement to DoD benefits but who are not identified in the Defense Enrollment Eligibility Reporting System program and to assist in determining eligibility for Civilian Health and Medical Program of the Uniformed Services benefits. This purpose is consistent with 38 U.S.C. 5701. These records may also be disclosed as part of an ongoing computer-matching program to accomplish this purpose.

45. The name, address, VA file number, social security number, sex of Veteran, date(s) of birth of the Veteran and dependents, current benefit pay amounts for compensation or pension, pay status, check amount, aid and attendance status, Veteran and spouse annual income amounts and type and combined degree of disability will be disclosed to the Department of Health and Human Services. The SSA will use the data in the administration of the Supplemental Security Income payment system as prescribed by Public Law 92–603. These records may also be disclosed as part of an ongoing computer-matching program to accomplish these purposes. This purpose is consistent with 38 U.S.C. 5701.

46. The names and current addresses of VA beneficiaries who are identified by finance centers of individual uniformed services of DoD and the Department of Homeland Security (Coast Guard) as responsible for the payment of Survivor Benefit Plan (SBP) premium payments to be released from this system of records to them upon their official written request for such information for their use in attempting to recover amounts owed for SBP premium payments.

47. This routine use authorizes VA to compile lists of the social security numbers and loan account numbers of all persons with VA-guaranteed and portfolio loans in default, or VA loans on which there has been a foreclosure and the Department paid a claim and provide these records to HUD for inclusion in its CAIVRS. Information included in this system may be disclosed to all participating agencies and lenders who participate in the agencies' programs to enable them to verify information provided by new loan applicants and evaluate the creditworthiness of applicants. These records may also be disclosed as part of an ongoing computer-matching program to accomplish these purposes.

48. Identifying information including social security number, abbreviated surname, first and middle initial, date of birth, sex and claim number, and excluding the full name and address, may be disclosed to the SSA for the purpose of conducting a computer match to obtain information to validate the social security number maintained in VA records.

49. Any information contained in the files of Veterans whose claims were referred to VA Central Office for an advisory opinion concerning their claims that their disabilities were incurred secondary to occupational radiation exposure may be disclosed to the Department of the Navy. The information to be furnished to the Navy would include the medical opinions, dose estimates, advisory opinions, and rating decisions including Veterans' names, addresses, VA claim numbers, social security numbers and medical information. The requested information may be disclosed to the Department of the Navy upon receipt of its official written request for such information for its use in the review and assessment of its occupational radiation exposure controls and training.

50. A Veteran's claims file number and folder location may be disclosed to a court of proper jurisdiction that has issued a garnishment order for that Veteran under 42 U.S.C. 659 through 660.

51. An individual's identifying and payment information may be disclosed to the educational institution, training establishment, or other entity the individual attends (or attended) if that individual received educational assistance from VA based on training at that educational institution, training establishment, or entity. VA will disclose this information to assist the

educational institution, training establishment, or other entity in verifying the individual's receipt of VA educational assistance and to assist the individual in applying for additional financial aid (e.g. student loans).

52. The name and address of a prospective, present, or former accredited representative, claims agent or attorney and any information concerning such individual which is relevant to a refusal to grant access privileges to automated Veterans' claims records, or a potential or past suspension or termination of such access privileges may be disclosed to the entity employing the individual to represent Veterans on claims for Veterans benefits.

53. The name and address of a former accredited representative, claim agent or attorney, and any information concerning such individual, except a Veteran's name and home address, which is relevant to a revocation of such access privileges may be disclosed to an appropriate governmental licensing organization where VA determines that the individual's conduct that resulted in revocation merits reporting.

54. A record from this system (other than the address of the beneficiary) may be disclosed to a former representative of a beneficiary to the extent necessary to develop and adjudicate a claim for payment of attorney fees to such representative from past-due benefits under 38 U.S.C. 5904(d) and Public Law 109–461 or to review a fee agreement between such representative and the beneficiary for reasonableness under 38 U.S.C. 5904(c)(2) and Public Law 109–461.

55. Disclosure of tax returns and return information received from the IRS may be made only as provided by 26 U.S.C. 6103 (an IRS confidentiality statute) also covering any IRS tax return information provided as part of an ongoing computer matching program.

56. Where VA determines that there is good cause to question the legality or ethical propriety of the conduct of a person or organization representing a person in a matter before VA, a record from this system may be disclosed, on VA's initiative, to any or all of the following: (1) applicable civil or criminal law enforcement authorities and (2) a person or entity responsible for the licensing, supervision, or professional discipline of the person or organization acting as a representative. Name and home addresses of Veterans and their dependents will be released on VA's initiative under this routine use only to Federal entities.

57. The name and address of a VA beneficiary, and other information as is reasonably necessary to identify such a beneficiary, who has been adjudicated as incompetent under 38 CFR 3.353, may be provided to the Attorney General of the United States or his/her designee, for use by the DOJ in the National Instant Criminal Background Check System mandated by the Brady Handgun Violence Prevention Act, Public Law 103–159.

58. Disclosure may be made to the National Archives and Records Administration (NARA) and General Services Administration in record management inspections and such other activities conducted under Authority of Title 44 U.S.C.

59. VA may disclose information from this system of records to the DOJ, either on VA's initiative or in response to DOJ's request for the information, after either VA or DOJ determines that such information is relevant to DOJ's representation of the United States or any of its components in legal proceedings before a court or adjudicative body, provided that, in each case, the agency also determines prior to disclosure that release of the records to the DOJ is a use of the information contained in the records that is compatible with the purpose for which VA collected the records. VA, on its own initiative, may disclose records in this system of records in legal proceedings before a court or administrative body after determining that the disclosure of records to the court or administrative body is a use of the information contained in the records that is compatible with the purpose for which VA collected the records.

60. Disclosure of relevant information may be made to individuals, organizations, public or private agencies, or other entities with whom VA has a contract or agreement or where there is a subcontract to perform such services as VA may deem practicable for the purposes of laws administered by VA, in order for the contractor or subcontractor to perform the services of the contract or agreement.

61. Disclosure to other Federal agencies may be made to assist such agencies in preventing and detecting possible fraud, waste, overpayment, or abuse by individuals in their operations and programs as well as identifying areas where legislative and regulatory amendments directed toward preventing overpayments. These records may also be disclosed as part of an ongoing computer-matching program to accomplish this purpose.

62. VA may on its own initiative, disclose any information or records to appropriate agencies, entities, and persons when (1) VA suspects or has confirmed that the integrity or confidentiality of information in the system of records has been compromised; (2) VA has determined that as a result of the suspected or confirmed compromise, there is a risk of embarrassment or harm to the reputations of the record subjects, harm to the economic or property interests, identity theft or fraud, or harm to the programs (whether maintained by VA or another agency or entity) that rely upon the potentially compromised information; and (3) the disclosure is to agencies, entities, or persons whom VA determines are reasonably necessary to assist or carry out the VA's efforts to respond to the suspected or confirmed compromise and prevent, minimize, or remedy such harm. This routine use permits disclosures by VA to respond to a suspected or confirmed data breach, including the conduct of any risk analysis or provision of credit protection services as provided in 38 U.S.C. 5724, as the terms are defined in 38 U.S.C. 5727.

63. VA may disclose information to other Federal Agencies including, but not limited to, identifying information, payment information, and vocational objectives about a Veteran or servicemember who is receiving or has received benefits under the Vocational Rehabilitation program to be used in data analysis and development of performance measures.

64. Any information contained in this system may be disclosed by VA, as deemed necessary, to DoD for use for determinations required by DoD. VA will routinely use the information to conduct medical evaluations needed to produce VA disability ratings and to promulgate subsequent claims for benefits under Title 38 U.S.C.

65. Information in this system (excluding date of birth, social security number, and address) relating to the use of transferred educational assistance benefits may be coequally disclosed to the transferor, i.e., the individual from whom eligibility was derived, and to each transferee, i.e., the individual receiving the transferred benefit. The information disclosed is limited to the two parties in each transferor-transferee relationship, as the transferor may have multiple transferred relationships.

POLICIES AND PRACTICES FOR STORING, RETRIEVING, ACCESSING, RETAINING, AND DISPOSING OF RECORDS IN THE SYSTEM:

STORAGE:

The BDN, Virtual VA, Corporate WINRS, VETSNET, and the VBMS are data telecommunication terminal systems. Records (or information contained in records) are maintained on

paper documents in claims folders (C-folders), vocational rehabilitation folders, electronic file folders (e.g., VBMS and TIMS Files), and on automated storage media (e.g., microfilm, microfiche, magnetic tape and disks). Such information may be accessed through BDN, Virtual VA, VBMS, Corporate WINRS, and VETSNET terminals. BDN, Virtual VA, Corporate WINRS, VETSNET, and VBMS terminal locations include VA Central Office, regional offices, VA health care facilities, Veterans Integrated Service Network offices, DoD Finance and Accounting Service Centers and the U.S. Coast Guard Pay and Personnel Center. Remote on-line access is also made available to authorized remote sites, representatives of claimants and to attorneys of record for claimants. A VA claimant must execute a prior written consent or a power of attorney authorizing access to his or her claims records before VA will allow the representative or attorney to have access to the claimant's automated claims records. Access by representatives and attorneys of record is to be used solely for the purpose of assisting an individual claimant whose records are accessed in a claim for benefits administered by VA. Information relating to receivable accounts owed to VA, designated the Centralized Accounts Receivable System (CARS), is maintained on magnetic tape, microfiche and microfilm. CARS is accessed through a data telecommunications terminal system at St. Paul, Minnesota.

RETRIEVABILITY:

File folders, whether paper or electronic, are indexed by name of the individual and VA file number. Automated records are indexed by name, VA file number, payee name and type of benefit. Automated records of employee productivity cannot be accessed. At the conclusion of a monthly reporting period, the generated listing is indexed by employee BDN identification number. Records in CAIVRS may only be retrieved by social security number.

SAFEGUARDS:

1. Physical Security:

(a) Access to working spaces and claims folder file storage areas in VA regional offices and centers is restricted to VA employees on a need-to-know basis. Generally, file areas are locked after normal duty hours and the offices and centers are protected from outside access by the Federal Protective Service or other security personnel. Employee claims file records and claims file records of public figures are stored in separate locked files. Strict control measures are enforced to ensure that access to and disclosure from these claims file records are limited to a need-to-know basis.

(b) Access to BDN, Virtual VA, Corporate WINRS, VETSNET and VBMS data telecommunication networks are by authorization controlled by the site security officer who is responsible for authorizing access to the BDN, Virtual VA, VBMS and VETSNET by a claimant's representative or attorney approved for access in accordance with VA regulations. The site security officer is responsible for ensuring that the hardware, software and security practices of a representative or attorney satisfy VA security requirements before granting access. The security requirements applicable to the access of automated claims files by VA employees also apply to the access of automated claims files by claimants' representatives or attorneys. The security officer is assigned responsibility for privacy-security measures, especially for review of violation logs, information logs and control of password distribution, including password distribution for claimants' representatives.

(c) Access to data processing centers is generally restricted to center employees, custodial personnel, Federal Protective Service and other security personnel. Access to computer rooms is restricted to authorized operational personnel through electronic locking devices. All other persons provided access to computer rooms are escorted.

(d) Employee production records are identified by the confidential BDN and VETSNET employee identification number, and are protected by management/supervisory personnel from unauthorized disclosure in the same manner as other confidential records maintained by supervisors.

2. BDN, Virtual VA, VETSNET, and VBMS System Security:

(a) Usage of the BDN, Virtual VA, Corporate WINRS, VETSNET, and VBMS systems is protected by the usage of ''login'' identification passwords and authorized function passwords. The passwords are changed periodically. These same protections apply to remote access users.

(b) At the data processing centers, identification of magnetic tapes and disks containing data is rigidly enforced using labeling techniques. Automated storage media, which are not in use, are stored in tape libraries, which are secured in locked rooms. Access to programs is controlled at three levels: programming, auditing and operations. Access to the data processing centers where HUD maintains CAIVRS is generally restricted to center employees and authorized subcontractors. Access to computer rooms is restricted to center employees and authorized operational personnel through electronic locking devices. All other persons granted access to computer rooms are escorted. Files in CAIVRS use social security numbers as identifiers. Access to information files is restricted to authorized employees of participating agencies and authorized employees of lenders who participate in the agencies' programs. Access is controlled by agency distribution of passwords. Information in the system may be accessed by use of a touch-tone telephone by authorized agency and lender employees on a ''need-to-know'' basis.

RETENTION AND DISPOSAL

Compensation, pension, and vocational rehabilitation claims file are retained at the servicing regional office until they are inactive for three years, after which they are transferred to the VA RMC in St. Louis, MO, for the life of the Veteran. At the death of the Veteran, these records are sent to a Federal Records Center (FRC), and maintained by the FRC for 60 years, and thereafter become the permanent possession of the NARA to be retained indefinitely as historical documents. Some claims files folders are electronically imaged, in which case the electronic file folder is maintained in the same manner as the claims file folder. Once a file is electronically imaged and established by VA as the official copy of record, its paper contents (with the exception of official legal documents, and service treatment records and other documents that are the property of DoD), are destroyed in accordance with Records Control Schedule VB–1 Part 1 Section XIII, as authorized by NARA.

Vocational Rehabilitation counseling records are maintained until the exhaustion of a Veteran's maximum entitlement or upon the exceeding of a Veteran's delimiting date of eligibility (generally, ten or twelve years from discharge or release from active duty), whichever occurs first, and then destroyed. Automated storage media containing temporary working information are retained until a claim is decided, and then destroyed. All other automated storage media are retained and disposed of in accordance with disposition authorization approved by NARA.

Education electronic file folders are retained at the servicing Regional

Processing Office. Education folders may be destroyed in accordance with the times set forth in the VBA Records Management, Records Control Schedule VB–1, Part 1, Section VII, as authorized by NARA.

Employee productivity records are maintained for two years after which they are destroyed by shredding or burning. File information for CAIVRS is provided to HUD by VA on magnetic tape. After information from the tapes has been read into the computer the tapes are returned to VA for updating. HUD does not keep separate copies of the tapes.

SYSTEM MANAGER(S) AND ADDRESS

Director, Compensation Service (21), 810 Vermont Avenue NW., VA Central Office, Washington, DC 20420.

Director, Pension and Fiduciary Service, 810 Vermont Avenue NW., VA Central Office, Washington, DC 20420.

Director, Education Service (22), 810 Vermont Avenue NW., VA Central Office, Washington, DC 20420.

Director, Vocational Rehabilitation and Employment Service (28), 810 Vermont Avenue NW., VA Central Office, Washington, DC 20420.

NOTIFICATION PROCEDURE

An individual, who wishes to determine whether a record is being maintained in this system under his or her name or other personal identifier, or wants to determine the contents of such record, should submit a written request or apply in person to the nearest VA regional office or center. Address locations are listed in VA Appendix 1 at the end of this document. VA employees wishing to inquire whether the system of records contains employee productivity information about themselves should contact their supervisor at the regional office or center of employment.

RECORD ACCESS PROCEDURES

Individuals seeking information regarding access to and contesting of VA records may write, call or visit the nearest VA regional office. Address locations are listed in VA Appendix 1.

CONTESTING RECORD PROCEDURES

(See Record access procedures above.)

RECORD SOURCE CATEGORIES:

Veterans, Servicemembers, reservists, spouses, surviving spouses, dependents and other beneficiaries of the Veteran, accredited service organizations, VA-supervised fiduciaries (i.e., VA Federal fiduciaries, court-appointed fiduciaries), military service departments, VA medical facilities and physicians, private medical facilities and physicians, education and rehabilitation training establishments, State and local agencies, other Federal agencies, State, local, and county courts and clerks, Federal, State, and local penal institutions and correctional facilities, other third parties and other VA records.

VA Appendix 1

VA Facilities

Patients should call the telephone numbers listed to obtain clinic hours of operation and services. For more information or to search for a facility near you by zip code, visit *http://www1.va.gov/directory/guide/home.asp?isFlash=1.* Please send address and telephone number corrections to: Department of Veterans Affairs, Federal Benefits for Veterans and Dependents (80D), 810 Vermont Ave. NW., Washington, DC 20420.

Alabama

VA Medical Centers

Birmingham 35233 (700 S. 19th St., 205–933–8101 or 800–872–0328)
Montgomery 36109–3798 (215 Perry Hill Rd., 334–272–4670 or 800–214–8387)
Tuscaloosa 35404 (3701 Loop Rd., East, 205–554–2000 or 888–269–3045)
Tuskegee 36083–5001 (2400 Hospital Rd., 334–727–0550 or 800–214–8387)

Clinics:

Bessemer 32055 (975 9th Ave., SW–Suite 400 at UAB West Medical Center West Bessemer, 205–428–3495)
Dothan 36301 (2020 Alexander Dr., 334–673–4166)
Dothan Mental Health Center 36301 (3753 Ross Clark Cir Ste 4, 334–678–1903)
Gadsden 35906 (206 Rescia Ave., 256–413–7154)
Huntsville 35801 (301 Governor's Dr., 256–535–3100)
Jasper 35501 (3400 Highway 78 East—Suite #215, 205–221–7384)
Madison 35758 (8075 Madison Blvd., Suite 101, 256–772–6220)
Mobile 36604 (1504 Springhill Ave., 251–219–3900)
Oxford 36203 (96 Ali Way Creekside South, 256–832–4141)
Sheffield 35660 (Florence Shoals Area Clinic: 422 DD Cox Blvd., 256–381–9055)

Regional Office

Montgomery 36109 (345 Perry Hill Rd., statewide 1–800–827–1000)

Vet Centers

Birmingham 35233 (1500 5th Ave. S., 205–731–0550)
Mobile 36606 (2577 Government Blvd., 251–478–5906)

National Cemeteries

Birmingham-Montevallo 35115 (731 Middle St., 205–665–9039)
Fort Mitchell 36856 (553 Hwy. 165, Fort Mitchell, 334–855–2184)
Mobile 36604 (1202 Virginia St., 850–453–4846)

Alaska

VA Medical Center

Anchorage 99508–2989 (2925 DeBarr Rd., 888–353–7574/907–257–4700)

Clinics

Fort Wainwright 99703 (Bldg 4076, Neeley Rd., Room 1J–101, Mailing Address: P.O. Box 74570, Fairbanks, AK 99707, 907–361–6370)
Kenai 99669 (11312 Kenai Spur Highway, #39, 907–283–2231)

Regional Office

Anchorage 99508–2989 (2925 De Barr Rd., statewide 1–800–827–1000)

Benefits Office

Juneau 99802 (P.O. Box 20069, 907–586–7472)

Vet Centers

Anchorage 99508 (4201 Tudor Centre Dr., Suite 115, 907–563–6966)
Fairbanks 99701 (540 4th Ave., Suite 100, 907–456–4238)
Kenai 99669 (Red Diamond Ctr., Bldg. F, #4, 43335 Kalifornsky Beach Rd., 907–260–7640)
Wasilla 99654 (851 E. West Point Dr., Suite 111, 907–376–4318)

National Cemeteries

Fort Richardson 99505–5498 (Building 997, Davis Hwy., 907–384–7075)
Sitka 99835 (803 Sawmill Creek Rd., 907–384–7075)

American Samoa

Clinic

Pago Pago 96799 (Fiatele Teo Army Reserve Bldg, Mailing Address: P.O. Box 1005, Pago Pago, AS 96799, 684–699–3730)

Benefits Office

Pago Pago 96799 (P.O. Box 1005, 684–633–5073)

Arizona

VA Medical Centers

Prescott 86313 (500 N. Hwy 89, 928–445–4860 or 800–949–1005)
Tucson 85723 (3601 South 6th Avenue, 520–792–1450 or 800–470–8262)
Phoenix 85012 (650 E. Indian School Rd., 602–277–5551 or 800–554–7174)

Clinics

Anthem 85086 (Anthem Medical Plaza, 3618 W. Anthem Way, Building D, #120, 623–551–6092)
Bellemont 86015–6196 (P.O. Box 16196, Camp Navajo Army Depot, 928–226–1056)
Buckeye 85326 (306 E. Monroe, 623–386–4814)
Casa Grande 85222 (900 E. Florence Blvd., Suites H & I, 520–629–4900)
Cottonwood 86326 (203 Candy Lane Building 5B, 928–649–1523 or 1532)
Globe 85501 (5860 S. Hospital Dr., Suite 11, 928–425–0027)
Green Valley 85614 (380 W. Hermosa Drive #140, 520–629–4900 or 800–470–8262)
Kingman 86401 (1726 Beverly Ave., 928–692–0080 or 928–445–4860x6830)

Lake Havasu City 86403 (2035 Mesquite, Suite E, 928–680–0090)
Mesa 85212–6033 (6950 E. Williams Field Road, Bldg. 23, 602–222–6568/3315)
Payson 85541 (1106 N. Beeline Highway, 928–472–3148)
Safford 85546 (711 South 14th Ave., 520–629–4900)
Show Low 85901 (2450 Show Low Lake Rd, Suite 1, 928–532–1069)
Sierra Vista 85635 (101 Coronado Dr., Suite A, 520–792–1450)
Sun City 85351 (10147 Grand Ave., Suite C1, 602–222–2630)
Tuscon 85741 (2945 W. Ina Rd., 520–629–4900)
Yuma 85365 (2555 E. Gila Ridge Rd., 520–629–4900)

Regional Office

Phoenix 85012 (3333 N. Central Ave., statewide 1–800–827–1000)

Vet Centers

Phoenix 85012 (77 E. Weldon Ave., Suite 100, 602–640–2981)
Phoenix-East Valley 85202 (1303 S. Longmore, Suite 5, Mesa, 480–610–6727)
Prescott 86303 (161 S. Granite St., Suite B, 928–778–3469)
Tucson 85719 (3055 N. 1st Ave., 520–882–0333)

National Cemeteries

Nat. Mem. Cem. of AZ 85024 (23029 N. Cave Creek Rd., Phoenix, 480–513–3600)
Prescott 86301 (500 Hwy. 89 N., 480–513–3600)

Arkansas

VA Medical Centers

Fayetteville 72703 (1100 N. College Ave., 479–443–4301 or 800–691–8387)
Little Rock 72205–5484 (4300 West 7th St., 501–257–1000)
North Little Rock 72114–1706 (2200 Fort Roots Dr., 501–257–1000)

Clinics

El Dorado 71730 (460 W Oak St., 870–862–2489)
Ft Smith 72917 (1500 Dodson Ave., Sparks Med., 479–709–6850 or 1–877–604–0798)
Harrison 72601 (707 N Main St., 870–741–3592)
Hot Springs 71913 (1661 Airport Rd., Suite E, 501–881–4112)
Jonesboro 72401 (223 E Jackson, 870–972–0063)
Mena 71953 (1706 Hwy. 71 N, 479–394–4800)
Mountain Home 72653 (#10 Medical Plaza, 870–424–4109)
Paragould 72450 (1101 Morgan St., 870–236–9756)
Pine Bluff 71603 (4010 Old Warren Road, 870–541–9300)
Texarkana 71854 (910 Realtor Ave., 870–216–2242)

Regional Office

North Little Rock 72114 (2200 Fort Roots Dr., Bldg. 65, statewide 1–800–827–1000)

Vet Center

North Little Rock 72114 (201 W. Broadway, Suite A, 501–324–6395)

National Cemeteries

Fayetteville 72701 (700 Government Ave., 479–444–5051)
Fort Smith 72901 (522 Garland Ave., 479–783–5345)
Little Rock 72206 (2523 Confederate Blvd., 501–324–6401)

California

VA Medical Centers

Fresno 93703 (2615 E. Clinton Ave., 559–225–6100 or 888–826–2838)
Livermore 94550 (4951 Arroyo Rd., 925–373–4700)
Loma Linda 92357 (11201 Benton St., 909–825–7084 or 800–741–8387)
Long Beach 90822 (5901 E. 7th St., 562–826–8000 or 888–769–8387)
Los Angeles 90073 (11301 Wilshire Blvd., 310–478–3711 or 800–952–4852)
Menlo Park 94025 (795 Willow Rd., 650–416–9997)
Palo Alto 94304–1290 (3801 Miranda Avenue, 650–493–5000 or 800–455–0057)
Sacramento 95655 (10535 Hospital Way, Mather, 800–382–8387 or 916–366–5366)
San Diego 92161 (3350 La Jolla Village Drive, 858–552–8585 or 800–331–8387)
San Francisco 94121–1598 (4150 Clement Street, 415–221–4810 or 800–733–0502

Clinics

Anaheim 92801 (Professional Center, 3rd Floor, #303, 1801 W. Romneya Dr., 714–780–5400)
Atwater 95301–5140 (3605 Hospital Road, Suite D, 209–381–0105)
Auburn 95603 (11985 Heritage Oaks Place, 530–889–0872 or 888–227–5404)
Bakersfield 93301 (1801 Westwind Dr., 661–632–1800)
Brawley 92227 (Imperial Valley, 528 G St., 760–344–9085)
Capitola 95010–3906 (1350 N. 41st St., Suite 102, 831–464–5519)
Chico 95926 (280 Cohasset Rd., 800–382–8387 or 530–879–5000)
Chula Vista 91910 (South Bay, 835 3rd Ave., 619–409–1600)
City of Commerce 90040 (East Los Angeles, 5426 E. Olympic Blvd., 323–725–7557)
Corona 92879 (800 Magnolia Ave., #101, 951–817–8820)
Escondido 92025 (815 E. Pennsylvania Ave., 760–466–7020)
Eureka 95501 (714 F St., 707–442–5335)
Fairfield 94535 (103 Bodin Cir., Travis Air Force Base, 800–382–8387 or 707–437–1800)
French Camp 95231 (Stockton Clinic, 7777 South Freedom Dr., 209–946–3400)
Gardena 90247 (1251 Redondo Beach Blvd., 3rd Floor, 310–851–4705)
Lancaster 93536 (Antelope Valley, 547 West Lancaster Blvd., 661–729–8655 or 800–515–0031)
Long Beach 90806 (Villages at Cabrillo: 2001 River Ave., Bldg 28, 562–388–8000)
Los Angeles 90012 (351 East Temple St., 213–253–2677)
Los Angeles 90073 (West LA Ambulatory Care, 11301 Wilshire Blvd., 310–268–3526)
Lynwood 90262 (3737 Martin Luther King Blvd. Suite 515, 310–537–6825)
Martinez 94553 (Clinic and Center for Rehabilitation & Extended Care, 150 Muir Rd., 800–382–8387 or 925–372–2000)
Modesto 95350 (1524 McHenry Ave., 209–557–6200)
Monterey 93955 (3401 Engineer Lane, Seaside, 831–883–3800)
North Hills 91343: (Sepulveda Clinic and Nursing Home, 16111 Plummer St., 818–891–7711 or 800–516–4567)
Oakland 94626 (Mental Health Clinic: 2505 West 14th St., Oakland Army Base, 800–382–8387 or 510–587–3400)
Oakland 94612 (2221 Martin Luther King Jr. Way, 800–382–8387 or 510–267–7800)
Oxnard 93030 (250 W. Citrus Grove Ave., Ste. 150, 805–983–6384)
Palm Desert 92211 (41–865 Boardwalk, Suite 103, 760–341–5570)
Redding 96002 (351 Hartnell Ave., 800–382–8387 or 530–226–7555)
Sacramento 95655 (Mental Health Clinic at Mather, 10633 Grissom Rd., 800–382–8387 or 916–366–5420)
Sacramento 95652 (McClellan Dental Clinic, 5401 Arnold Ave., 800–382–8387 or 916–561–7800)
Sacramento 95652 (McClellan Outpatient Clinic, 5342 Dudley Blvd., 800–382–8387 or 916–561–7400)
San Bruno 9406 (1001 Sneath Lane, Suite 300, Third Floor, 650–615–6000)
San Diego 92108 (Mission Valley, 8810 Rio San Diego Dr., 619–400–5000)
San Francisco 94107 (Downtown Clinic, 401 3rd St., 415–551–7300)
San Gabriel 91776 (Pasadera, 420 W. Las Tunas Drive, 626–289–5973)
San Jose 95119 (80 Great Oaks Boulevard, 408–363–3011)
San Luis Obispo 93401 (Pacific Med. Plaza, 1288 Morro St., Ste. 200, 805–543–1233)
Santa Ana 92704 (Bristol Medical, 2740 S. Bristol St., 1st Floor, #101, 714–825–3500)
Santa Barbara 93110 (4440 Calle Real, 805–683–1491)
Santa Fe Springs 90670 (10210 Orr & Day Rd., 562–864–5565)
Santa Maria 93454 (1550 East Main St., 805–354–6000)
Santa Rosa 95404 (3315 Chanate Rd., 707–570–3855 or 570–3800)
Seaside 93955 (Monterey Clinic, 3401 Engineering Lane, 831–883–3800)
Sonora 95370 (19747 Greenley Rd., 209–588–2600)
Stockton 95231 (500 West Hospital Rd., 209–946–3400)
Sun City 92586 (28125 Bradley Road, Suite 130, 951–672–1931)
Tulare 93274 (VA South Valley Clinic, 1050 N. Cherry St., 559–684–8703)
Ukiah 95482 (630 Kings Court 707–468–7700)
Upland 91786 (1238 E. Arrow Highway, No. 100, 909–946–5348)
Vallejo 94592 (Mare Island Clinic, 201 Walnut Ave., 800–382–8387 or 707–562–8200)
Victorville 92392 (12138 Industrial Boulevard, Suite 120, 760–951–2599)
Vista 92083 (1840 West Drive, 760–643–2000)

Regional Offices

Los Angeles 90024 (Fed. Bldg., 11000 Wilshire Blvd., serving counties of Inyo,

Kern, Los Angeles, San Bernardino, San Luis Obispo, Santa Barbara and Ventura, statewide 1–800–827–1000)
Oakland 94612 (1301 Clay St., Rm. 1300 North, serving all CA counties not served by the Los Angeles, San Diego, or Reno VA Regional Offices, 1–800–827–1000)
San Diego 92108 (8810 Rio San Diego Dr., serving Imperial, Orange, Riverside and San Diego, statewide 1–800–827–1000). The counties of Alpine, Lassen, Modoc, and Mono are served by the Reno, NV, Regional Office.

Benefits Office

Sacramento 95827 (10365 Old Placerville Rd., 916–364–6500)

Vet Centers

Anaheim 92805 (859 S. Harbor Blvd., 714–776–0161)
Chico 95926 (280 Cohasset Rd., Suite 100, 530–899–8549)
Concord 94520 (1899 Clayton Rd., Suite 140, 925–680–4526)
Corona 92879 (800 Magnolia Ave., 110, 951–734–0525)
East Los Angeles 90022 (5400 E. Olympic Blvd., 140, 323–728–9966)
Eureka 95501 (2830 G St., Suite A, 707–444–8271)
Fresno 93726 (3636 N. 1st St., Suite 112, 559–487–5660)
Gardena 90247 (1045 W. Redondo Beach Blvd., 150, Gardena, 310–767–1221)
West Los Angeles 90230 (5730 Uplander Way, Suite 100, Culver City, 310–641–0326)
Modesto 95351 (1219 N. Carpenter Rd., #11 & 12, 209–527–1359 or 209–527–5961)
Oakland 94612 (1504 Franklin St., 200, 510–763–3904)
Redwood City 94062 (2946 Broadway St., 650–299–0672)
Rohnert Park 94928 (6225 State Farm Dr., Suite 101, 707–586–3295)
Sacramento 95825 (1111 Howe Ave., Suite 390, 916–566–7430)
San Bernardino 92408 (155 West Hospitality Lane, Suite 140, 909–890–0797)
San Diego 92103 (2900 6th Ave., 619–294–2040)
San Francisco 94102 (505 Polk St., 415–441–5051)
San Jose 95112 (278 N. 2nd St., 408–993–0729)
San Marcos 92069 (1 Civic Center Dr., Suite 140, 760–744–6914)
Santa Cruz 95010 (1350 41st Ave., Suite 102, 831–464–4575)
Sepulveda 91343 (9737 Haskell Ave., 818–892–9227)
Ventura 93001 (790 E. Santa Clara, Suite 100, 805–585–1860)

National Cemeteries

Fort Rosecrans 92106 (P.O. Box 6237, Point Loma, San Diego, 619–553–2084)
Golden Gate 94066 (1300 Sneath Ln., San Bruno, 650–589–7737)
Los Angeles 90049 (950 South Sepulveda Blvd., 310–268–4675)
Riverside 92518 (22495 Van Buren Blvd., 951–653–8417)
Sacramento Valley VA 95620 (5810 Midway Rd., Dixon, 707–693–2460)
San Francisco 94129 (1 Lincoln Blvd., Presidio of San Francisco, 650–589–7737)
San Joaquin Valley 95322 (32053 West McCabe Rd., Santa Nella, 209–854–1040)

Colorado

Medical Centers

Denver 80220 (1055 Clermont Street, 303–399–8020 or toll free: 888–336–8262)
Grand Junction 81501 (2121 North Avenue, 970–242–0731 or toll free 866–206–6415)

Health Administration Center

Denver 80209 (3773 Cherry Creek North Dr., 303–331–7500)

Clinics

Alamosa 81101 (San Luis Valley Clinic/Sierra Blanca Med. Ctr.: 622 Del Sol Drive, 719–587–6800 or toll free 1–866–659–0930)
Aurora 80045 (13001 East 17th Place, Bld. 500, 2nd Floor, West Wing, 303–724–0190)
Burlington 80807 (1177 Rose Avenue, 719–346–5239)
Colorado Springs 80905 (25 North Spruce St., 719–327–5660 or 800–278–3883)
Craig 81625 (551 Tucker Street, 970–824–9721 or 970–242–0731)
Durango 81301 (400 S. Camino Del Rio, 970–247–2214)
Ft. Collins 80524 (1100 Poudre River Drive, 970–224–1550)
Greeley 80631 (2020 16th St., 970–313–0027)
La Junta 81050 (1100 Carson Ave., Suite 104, 719–383–5195)
Lakewood 80225 (155 Van Gordon St., Suite 395, 303–914–2680)
Lamar 81052 (High Plains Community Health Center 201 Kendall Dr., 719–336–5972)
Montrose 81401 (4 Hillcrest Plaza Way, 970–249–7791 or 970–242–0731)
Pueblo 81008 (4112 Outlook Boulevard, 719–553–1000 or 800–369–6748)

Regional Office

Denver 80225 (Mailing Address: PO Box 25126. Physical Address: 155 Van Gordon St., Lakewood, 80228, statewide 1–800–827–1000)

Vet Centers

Boulder 80302 (2336 Canyon Blvd., Suite 103, 303–440–7306)
Colorado Springs 80903 (416 E. Colorado Ave., 719–471–9992)
Denver 80230 (7465 E. First Ave., Ste. B, 303–326–0645)
Grand Junction 81505 (2472 F. Rd. Unit 16, 970–245–4156)

National Cemeteries

Fort Logan 80236 (4400 W. Kenyon Ave., Denver, 303–761–0117)
Fort Lyon 81504 (15700 County Road HH, Las Animas, 303–761–0117)

Connecticut

VA Medical Centers

Newington 06111 (555 Willard Ave., 860–666–6951)
West Haven 06516 (950 Campbell Avenue, 203–932–5711)

Clinics

Danbury 06810 (7 Germantown Rd., Suite 2B, 203–798–8422)
New London 06320 (Shaw's Cove Four, 860–437–3611)
Stamford 06905 (1275 Summer St, Suite 102, 203–325–0649)
Waterbury 06706 (95 Scovill St., 203–465–5292)
Windham 06226 (Windham Hospital, 96 Mansfield St., 860–450–7583)
Winsted 06908 (Winsted Health Center, 115 Spencer St., 860–738–6985)

Regional Office

Hartford (Bldg 2E—RM 5137, 555 Willard Ave.; Newington, 06111–2693, statewide 1–800–827–1000)

Vet Centers

Wethersfield 06109 (30 Jordan Lane, 860–563–2320)
Norwich 06360 (2 Cliff St., 860–887–1755)
West Haven 06516 (141 Captain Thomas Blvd., 203–932–9899)

Delaware

VA Medical Center

Wilmington 19805 (1601 Kirkwood Highway, 302–994–2511 or 800–461–8262)

Clinics

Millsboro 19966 (214 W. DuPont Highway, 302–934–0195)
Seaford 19973 (121 S Front St., 302–628–8324)

Regional Office

Wilmington 19805 (1601 Kirkwood Hwy., local, 302–994–2511)

Vet Center

Wilmington 19805 (1601 Kirkwood Hwy., Bldg. 3, 302–994–1660)

District of Columbia

VA Medical Center

Washington 20422 (50 Irving Street, NW., 202–745–8000 or 888–553–0242)

Clinic

Washington 20032 (820 Chesapeake Street, SE., 202–745–8685)

Regional Office

Washington, DC, 20421 (1722 I St., NW., local, 1–800–827–1000)

Vet Center

Washington, DC 20011 (1250 Taylor St., NW., 202–726–5212)

Florida

VA Medical Centers

Bay Pines 33744 (10000 Bay Pines Blvd., Mailing Address: P.O. Box 5005, Bay Pines, FL 33744, 727–398–6661/888–820–0230)
Gainesville 32608–1197 (1601 SW. Archer Rd., 352–376–1611 or 800–324–8387)
Lake City 32025–5808 (619 S. Marion Avenue, 386–755–3016 or 800–308–8387)
Miami 33125 (1201 NW. 16th St., 305–575–7000 or 888–276–1785)
Orlando 32803 (5201 Raymond St., 407–629–1599 or 800–922–7521)
Tampa 33612 (13000 Bruce B. Downs Blvd., 813–972–2000 or 888–716–7787)

West Palm Beach 33410–6400 (7305 N. Military Trail, 561–422–8262 or 800–972–8262)

Clinics

Boca Raton 33433 (901 Meadows Rd., 561–416–8995)
Brooksville 34613 (14540 Cortez Blvd., Suite 200, 352–597–8287)
Coral Springs 33065 (9900 West Sample Road, Suite 100, 954–575–4940)
Daytona Beach 32114 (551 National Health Care Dr., 386–323–7500)
Deerfield Beach 33442 (2100 SW. 10th St., 954–570–5572)
Delray Beach 33445 (4800 Linton Blvd., Building E, Suite 300, 561–495–1973)
Dunedin 34698 (1721 Main St., 727–734–5276)
Ellenton 34222 (4333 U.S. Highway 301 North, 941–721–0649)
Fort Myers 33916 (3033 Winkler Extension, 239–939–3939)
Ft. Pierce 34950 (727 North US 1, 772–595–5150)
Hollywood 33021 (3702 Washington St., Suite 201, 954–986–1811)
Hollywood 33024 (Pembroke Pines, 7369 W. Sheridan St., Suite 102, 954–894–1668)
Homestead 33030 (950 Krome Avenue, Suite 401, 305–248–0874)
Jacksonville 32206 (1833 Boulevard, 904–232–2751)
Key Largo 33037 (105662 Overseas Highway, 305–451–0164)
Key West 33040 (1300 Douglas Circle, Building L–15, 305–293–4609)
Kissimmee 34741 (2285 North Central Avenue, 407–518–5004)
Lakeland 33803 (3240 S. Florida Avenue, 863–701–2470) Lecanto 34461 (2804 W. Marc Knighton Ct., Suite A, 352–746–8000)
Leesburg 34748 (711 W. Main St., 352–435–4000)
Miami 33135 (Healthcare for Homeless Vets., 1492 West Flagler St., 305–541–5864)
Miami 33135 (Substance Abuse Clinic, 1492 West Flagler St., #101, 305–541–8435)
Naples 34104 (2685 Horseshoe Drive—Suite 101, 239–659–9188)
New Port Richey 34654 (9912 Little Road, 727–869–4100)
Oakland Park 33334–3496 (Ft Lauderdale, 5599 North Dixie Highway, 954–771–2101)
Ocala 34470 (1515 Silver Springs Blvd., 352–369–3320)
Okeechobee 34972 (1201 N. Parrot Avenue, 863–824–3232)
Panama City Beach 32407 (6703 West Highway 98, 850–636–7000)
Panama City Beach 32407–7018 (Naval Support Activity-Panama City, 101 Vernon Ave #387, 850–636–7000)
Pembroke Pines (Pembroke Pines, 7369 W. Sheridan St., Suite 102, 954–894–1668)
Pensacola 32503 (312 Kenmore Road, 850–476–1100)
Port Charlotte 33952 (4161 Tamiami Trail Unit 4, 941–235–2710)
Sanford 32771 (1403 Medical Plaza Drive, Suite 109, 407–323–5999)
Sarasota 34233 (5682 Bee Ridge Rd., Suite 100, 941–371–3349)
Sebring 33870 (3760 U.S. Highway 27 South, 863–471–6227, Mental Health Phone 863–314–0325)
St. Augustine 32086 (1955 U.S. 1 South, Suite 200, 904–829–0814 or 866–401–8387)
St. Petersburg 33711 (3420 8th Avenue South, 727–322–1304)
Stuart 34997 (3501 S E Willoughby Boulevard, 772–288–0304)
Tallahassee 32308 (1607 St. James Ct., 850–878–0191)
The Villages 32162 (Laurel Lake Prof. Park, 1950 Laurel Manor Dr., Bldg. 240, 352–205–8900)
Vero Beach 32960 (372 17th Street, 772–299–4623)
Viera 32940 (2900 Veterans Way 321–637–3788)
Zephyrhills 33541 (6937 Medical View Ln., 813–780–2550)

Regional Office

St. Petersburg 33708 (mailing address: P.O. Box 1437, 33731; physical address: 9500 Bay Pines Blvd., statewide 1–800–827–1000)

Benefits Offices

Fort Lauderdale 33301 (VR&E, 299 East Broward Blvd., Room 324, 1–800–827–1000)
Jacksonville 32256 (VR&E, 7825 Baymeadows Way, Suite 120–B, 1–800–827–1000)
Orlando 32801 (1000 Legion Pl., VRE–Suite 1500, C&P–Suite 1550, 1–800–827–1000)
Pensacola 32503–7492 (C&P, 312 Kenmore Rd., Rm. 1G250, 1–800–827–1000)
West Palm Beach 33410 (C&P, 7305 North Military Tr., Suite 1A–167, 1–800–827–1000)

Vet Centers

Ft. Lauderdale 33304 (713 NE. 3rd Ave., 954–356–7926)
Gainesville 32607 (105 NW 75th St., Suite 2, 352–331–1408)
Jacksonville 32202 (300 East State St., 904–232–3621)
Melbourne 32935 (2098 Sarno Rd., 321–254–3410)
Miami 33122 (8280 NW 27th St., Suite 511, 305–859–8387)
Orlando 32822 (5575 S. Semoran Blvd., Suite 36, 407–857–2800)
Palm Beach 33461 (2311 10th Ave., North 13, 561–585–0441)
Pensacola 32501 (4501 Twin Oaks Dr., 850–456–5886)
Sarasota 34231 (4801 Swift Rd., 941–927–8285)
St. Petersburg 33713 (2880 1st Ave., N., 727–893–3791)
Tallahassee 32303 (548 Bradford Rd., 850–942–8810)
Tampa 33604 (8900 N. Armenia Ave., Ste. 312, 813–228–2621)

National Cemeteries

Barrancas 32508–1054 (80 Hovey Rd., Naval Air Station, Pensacola, 850–453–4846)
Bay Pines 33504–0477 (10000 Bay Pines Blvd., North Bay Pines, 727–398–9426)
Florida 33513 (6502 SW 102nd Ave., Bushnell, 352–793–7740)
Jacksonville 32202 (300 N. Hogan St.)
St. Augustine 32084 (104 Marine St., 352–793–7740)
South Florida 33467 (6501 South State Road 7, Lake Worth, 561–649–6489)

Georgia

VA Medical Centers

Augusta 30904–6285 (1 Freedom Way, 706–733–0188 or 800–836–5561)
Decatur 30033 (1670 Clairmont Road, 404–321–6111 or 800–944–9726)
Dublin 31021 (1826 Veterans Blvd., 478–272–1210 or 800–595–5229)

Clinics

Aiken 29803 (951 Millbrook Rd., 803–643–9016)
Albany 31701 (417 4th Avenue, 229–446–9000)
Athens 30601 (9249 Highway 29, 706–227–4534)
Columbus 31906 (1310 13th St., 706–257–7200)
Decatur 30030 (755 Commerce Dr., 2nd Floor, 404–417–5200)
East Point 30344 (1513 Cleveland Ave., 404–321–6111 x2600)
Lawrenceville 30043 (1970 Riverside Pkwy, 404–417–1750)
Macon 31220 (5398 Thomaston Road, Suite B, 478–476–8868)
Oakwood 30566 (3931 Munday Mill Rd., 404–728–8212)
Rome 30161 (30 Chateau Dr, SE., 706–235–6581)
Savannah 31406 (325 West Montgomery Crossroads, 912–920–0214)
Smyrna 30082 (562 Concord Road, 404–417–1760)
Valdosta 31602 (2841 N. Patterson Street, 229–293–0132)

Regional Office

Decatur 30033 (1700 Clairmont Rd., statewide 1–800–827–1000)

Vet Centers

Atlanta 30324 (1440 Dutch Valley Place, Suite G, 404–347–7264)
Macon 31201 (750 Riverside Dr., 478–272–1210 ext. 3883/4)
Savannah 31406 (8110A White Bluff Rd., 912–652–4097)

National Cemeteries

Georgia 30114 (2025 Mt. Carmel Church Lane, Canton, 866–236–8159)
Marietta 30060 (500 Washington Ave., 866–236–8159)

Guam

Clinic

Agana Heights 96919 (U.S. Naval Hospital, Bldg-1, E–200, Box 7608, 671–344–9200)

Benefits Office/Vet Center

Hagatna 96910 (Reflection Center, # 201, 222 Chalan Santo Papa St., 671–472–7161)

Hawaii

Medical Center

Honolulu 96819–1522 (459 Patterson Rd., E Wing) (toll-free from Hawaii, Guam, Saipan, Rota and Tinian at 1–800–827–1000; toll-free from American Samoa at 1–877–899–4400)

Clinics

Hilo 96720 (1285 Wainuenue Ave., Suite 211, 808–935–3781)

Honolulu PTSD 96819 (3375 Koapaka St., 808–566–1546)
Kauai; Lihue 96766 (3–3367 Kuhio Hwy., Suite 200, 808–246–0497) Kona; Kailua-Kona 96740 (75–377 Hualalai Rd., 808–329–0774)
Maui; Kahului 96732 (203 Ho'ohana St., Suite 303, 808–871–2454)

Regional Office

Honolulu 96819–1522 (459 Patterson Rd., E Wing. Mailing address: PO Box 29020, Honolulu, HI 96820) (toll-free from Hawaii, Guam, Saipan, Rota and Tinian, 1–800–827–1000; toll-free from American Samoa, 1–877–899–4400)

VR&E Benefits Offices

Hilo 96720 (1285 Waianuenue, 2nd Floor, 808–935–6691)
Kahului 96732 (203 Ho'ohana St., 808–873–9426)

Vet Centers

Hilo 96720 (120 Pu'uhonu St., Suite 2, 808–969–3833)
Honolulu 96814 (1680 Kapiolani Blvd., Suite F.3, 808–973–8387)
Kailua-Kona 96740 (Hale Kui Plaza, Suite 207, 73–4976 Kamanu St., 808–329–0574)
Lihue 96766 (3–3367 Kuhio Hwy., Suite 101, 808–246–1163)
Wailuku 96793 (35 Lunalilo, Suite 101, 808–242–8557)

National Cemetery

Nat. Cem. of the Pacific 96813–1729 (2177 Puowaina Dr., Honolulu, 808–532–3720)

Idaho

Medical Center

Boise 83702 (500 West Fort St., 208–422–1000)

Clinics

Caldwell 83605 (120 E. Pine St., 208–454–4820)
Pocatello 83201 (444 Hospital Way, Suite 801, 208–232–6214)
Salmon 83467 (111 Lillian St., #203, 208–756–8515)
Twin Falls 83301 (260 2nd Ave, E., 208–732–0947)

Regional Office

Boise 83702 (805 W. Franklin St., statewide, 1–800–827–1000)

Vet Centers

Boise 83705 (5440 Franklin Rd., Suite 100, 208–342–3612)
Pocatello 83201 (1800 Garrett Way, 208–232–0316)

Illinois

VA Medical Centers

Chicago 60612 (820 South Damen Ave., 312–569–8387)
Danville 61832–5198 (1900 East Main Street, 217–554–3000 or 800–320–8387)
Hines 60141 (5th & Roosevelt Rd. P.O. Box 5000, 708–202–8387)
Marion 62959 (2401 West Main, 618–997–5311)
North Chicago 60064 (3001 Green Bay Road, 847–688–1900 or 800–393–0865)

Clinics

Aurora 60506 (1700 N. Landmark Road, 630–859–2504)
Belleville 62223 (6500 W Main St., 314–286–6988)
Chicago 60620 (7731 S Halsted St., 773–962–3700)
Chicago 60611 (Lakeside, 333 E. Huron, 312–569–8387)
Chicago Heights 60411 (30 E. 15th Street, Suite 207, 708–756–5454)
Decatur 62526–9381 (3035 East Mound Road, 217–875–2670)
Effingham 62401 (1901 S 4th St Suite 21, 217–347–7600)
Elgin 60123 (450 W. Dundee Rd., 847–742–5920)
Evanston 60202 (107–109 Clyde St., 847–869–6315)
Freeport 61032 (1301 Kiwanis Dr., 815–235–4881) Galesburg 61401 (387 East Grove, 309–343–0311)
Joliet 60435 (2000 Glenwood Ave., 815–744–0492)
LaSalle 61301 (2970 Chartres, 815–223–9678)
Manteno 60950 (Illinois Veterans Home, One Veterans Dr., 815–468–1027)
McHenry 60050 (620 South Route 31, 815–759–2306)
Mt. Vernon 62864 (1 Doctors Park Rd., 618–246–2910)
Oak Lawn 60453 (4700 W. 95th St., 708–499–3675)
Oak Park 60302 (149 S. Oak Park Ave., 708–386–3008)
Peoria 61605–2400 (411 Dr. Martin Luther King Jr. Dr., 309–497–0790)
Quincy 62301 (721 Broadway, 217–224–3366)
Rockford 61108 (4940 East State St., 815–227–0081)
Springfield 62702 (700 North 7th Street, Suite C, 217–522–9730)

Regional Office

Chicago 60612 (2122 W. Taylor St., statewide 1–800–827–1000)

Vet Centers

Chicago 60620 (7731 S. Halsted St., Suite 200, 773–962–3740)
Chicago Heights 60411 (1600 S. Halsted St., 708–754–0340)
East St. Louis 62203 (1265 N. 89th St., Suite 5, 618–397–6602)
Evanston 60202 (565 Howard St., 847–332–1019)
Moline 61265 (1529 46th Ave., 6, 309–762–6954)
Oak Park 60302 (155 S. Oak Park Blvd., 708–383–3225)
Peoria 61603 (3310 N. Prospect Rd., 309–671–7300)
Springfield 62702 (624 S. 4th St., 217–492–4955)

National Cemeteries

Abraham Lincoln 60421 (27034 South Diagonal Rd., Elwood, 815–423–9958)
Alton 62003 (600 Pearl St., 314–260–8720)
Camp Butler 62707 (5063 Camp Butler Rd., Springfield, 217–492–4070)
Danville 61832 (1900 East Main St., 217–554–4550)
Mound City 62963 (Junction Highways 37 & 51, 314–260–8720)
Quincy 62301 (36th and Maine St., 309–782–2094)
Rock Island 61299–7090 (Rock Island Arsenal, Bldg. 118, 309–782–2094)

Indiana

VA Medical Centers

Fort Wayne 46805 (2121 Lake Ave., 260–426–5431 or 800–360–8387)
Indianapolis 46202 (1481 W. 10th St., 317–554–0000 or 888–878–6889)
Marion 46953–4589 (1700 East 38th St., 765–674–3321 or 800–360–8387)

Clinics

Bloomington 47403 (455 South Landmark Avenue, 812–336–5723, or toll free 877–683–0865)
Crown Point 46307 (9330 S. Broadway, 219–662–5000)
Evansville 47713 (500 E Walnut St., 812–465–6202)
Greendale 47025 (1600 Flossie Dr., 812–539–2313)
Muncie 47304–6357 (3500 W. Purdue Ave., 765–284–6822)
New Albany 47150 (811 Northgate Blvd., 502–287–4100)
Richmond 47374 (4351 South A St., 765–973–6915)
South Bend 46614–9668 (5735 S. Ironwood Road, 574–299–4847)
Terre Haute 47802 (110 W Honeycreek Pkwy, 812–232–2890)
West Lafayette 47906 (3851 N. River Road, 765–464–2280)

Regional Office

Indianapolis 46204 (575 N. Pennsylvania St., statewide 1–800–827–1000

Vet Centers

Evansville 47711 (311 N. Weinbach Ave., 812–473–5993 or 473–6084)
Fort Wayne 46802 (528 West Berry St., 260–460–1456)
Merrillville 46410 (6505 Broadway Ave., 219–736–5633)
Indianapolis 46208 (3833 N. Meridian St., Suite 120, 317–927–6440)

National Cemeteries

Crown Hill 46208 (700 W. 38th St., Indianapolis, 765–674–0284)
Marion 46952 (1700 E. 38th St., 765–674–0284)
New Albany 47150 (1943 Ekin Ave., 502–893–3852)

Iowa

VA Medical Centers

Des Moines 50310–5774 (3600 30th St., 515–699–5999 or 800–294–8387)
Iowa City 52246–2208 (601 Highway 6 West, 319–338–0581 or 800–637–0128)
Knoxville 50138 (1515 W. Pleasant Street, 641–842–3101 or 800–816–8878)

Clinics

Bettendorf 52722 (2979 Victoria St., 563–332–8528)
Dubuque 52001 (Mercy Health Center, 250 Mercy Dr., 563–589–8899)
Fort Dodge 50501 (2419 2nd Avenue N, 515–576–2235)

Mason City 50401 (520 S. Pierce, Suite 150, 641–421–8077)
Sioux City 51104 (1551 Indian Hills Drive, Suite 206, 712–258–4700)
Spirit Lake 51360 (1310 Lake St., 712–336–6400)
Waterloo 50701 (1015 S Hackett Rd., 319–235–1230)

Regional Office

Des Moines 50309 (210 Walnut St., Rm. 1063, statewide 1–800–827–1000)

Vet Centers

Cedar Rapids 52402 (1642 42nd St. NE., 319–378–0016)
Des Moines 50310 (2600 Martin Luther King Jr. Pkwy., 515–284–4929)
Sioux City 51104 (1551 Indian Hills Dr., Suite 214, 712–255–3808)

National Cemetery

Keokuk 52632 (1701 J St., 309–782–2094)

Kansas

VA Medical Centers

Leavenworth 66048–5055 (4101 S. 4th St., 913–682–2000 or 800–952–8387)
Topeka 66622 (2200 SW., Gage Boulevard, 785–350–3111 or 800–574–8387)
Wichita 67218 (5500 E. Kellogg, 316–685–2221 or 888–878–6881)

Clinics

Abilene 67410 (510 NE 10th St., 785 263–2100 ext. 161)
Chanute 66720 (Neosho Memorial Medical Center, 629 South Plummer, 620–431–4000 ext. 1553)
Emporia 66801 (Newman Hospital, 919 W. 12th Avenue, Suite D, 620–342–7432)
Ft. Dodge 67801 (300 Custer, 1–888–878–6881 x41040)
Ft. Scott 66701 (Newman Young Clinic: 902 Horton St., 620–223–8400, ext 8655)
Garnett 66032 (Anderson County Hospital: 421 South Maple, 785–448–3131 ext. 309)
Hays 67601 (Hays Clinic: 207–B East Seventh, 1–888–878–6881 x41000)
Holton 66436 (Holton Comm. Hosp. 1110 Columbine Dr., 785–364–2116 x115 or 154)
Junction City 66441 (715 Southwind Dr., 800–574–8387 ext. 54670)
Kansas City 66102 (21 N 12th St., Bethany Med. Blg., #110, 1–800–952–8387 x56990)
Lawrence 66049 (2200 Harvard Road, 800–574–8387 ext. 54650) Liberal 67901 (Liberal Clinic: 2 Rock Island Road, Suite 200, 620–626–5574)
Paola 66071 (510 South Hospital Drive, 816–922–2160)
Parsons 67357 (1401 North Main Street, 1–888–878–6881 x41060)
Russell 67665 (Regional Hosp. Medical Arts Blg., 200 S. Main St., 785–483–3131 x155)
Salina 67401 (1410 E. Iron, Suite 1, 1–888–878–6881 x41020)
Seneca 66538 (Nemaha Valley Hosp., 1600 Community Dr., 785–336–6181 x162)

Regional Office

Wichita 67218 (Robert J. Dole Regional Office, 5500 E. Kellogg Ave., 1–800–827–1000)

Vet Center

Wichita 67211 (413 S. Pattie, 316–265–3260)

National Cemeteries

Fort Leavenworth 66027 (395 Biddle Blvd., 913–758–4105)
Fort Scott 66701 (900 East National Ave., 620–223–2840)
Leavenworth 66048 (4101 South 4th St., Traffic Way, 913–758–4105)

Kentucky

VA Medical Centers

Lexington-Cooper Dr. Div. 40502 (1101 Veterans Dr., 859–233–4511 or 888–824–3577)
Lexington-Leestown Div. 40511 (2250 Leestown Rd., 859–233–4511 or 888–824–3577)
Louisville 40206 (800 Zorn Avenue, 502–287–4000 or 800–376–8387)

Clinics

Bellevue 41073 (103 Landmark Dr., 859–392–3840)
Bowling Green 42103 (Hartland Medical Plaza, 1110 Wilkinson Trace Cir., 270–796–3590)
Florence 41042 (7711 Ewing, 859–282–4480)
Ft. Campbell 42223 (Desert Storm Ave. Building 39, 270–798–4118)
Ft Knox 40121 (851 Ireland Loop, 502–624–9396)
Hanson 42413 (926 Veterans Drive, 270–322–8019)
Louisville 40207 (4010 Dupont Circle, 502–287–6986)
Louisville-Newburg 40218 (3430 Newburg Rd., 502–287–6223)
Louisville-Shively 40216 (3934 North Dixie Highway, Suite 210, 502–287–6000)
Louisville-Standiford Field 40213 (1101 Grade Ln., 502–413–4635)
Paducah 42001 (2620 Perkins Creek Dr., 270–444–8465)
Prestonsburg 41653 (Highlands Reg., Med., 5000 KY RT 321 Box 668, 606–886–1970)
Somerset 42503 (104 Hardin Ln., 606–676–0786)

Regional Office

Louisville 40202 (321 W. Main St., Ste., 390, statewide 1–800–827–1000)

Vet Centers

Lexington 40507 (301 E. Vine St., Suite C, 859–253–0717)
Louisville 40208 (1347 S. 3rd St., 502–634–1916)

National Cemeteries

Camp Nelson 40356 (6980 Danville Rd., Nicholasville, 859–885–5727)
Cave Hill 40204 (701 Baxter Ave., Louisville, 502–893–3852)
Danville 40442 (277 N. First St., 859–885–5727)
Lebanon 40033 (20 Highway 208, 502–893–3852)
Lexington 40508 (833 W. Main St., 859–885–5727)
Mill Springs 42544 (9044 West Highway 80, Nancy, 859–885–5727)
Zachary Taylor 40207 (4701 Brownsboro Rd., Louisville, 502–893–3852)

Louisiana

VA Medical Centers

Alexandria 71306 (: P.O. Box 69004, 318–473–0010 or 800–375–8387)
Shreveport 71101–4295 (510 E. Stoner Ave., 318–221–8411 or 800–863–7441)

Clinics

Baton Rouge 70809 (7968 Essen Park Ave., 225–761–3400)
Hammond 70403 (1131 South Morrison Ave., 985–902–5026)
Houma 70360 (1750 Martin Luther King Jr Blvd. Ste 107, 985–851–0188)
Jennings 70546 (1907 Johnson St., 337–824–1000)
Lafayette 70501 (2100 Jefferson St., 337–261–0734)
LaPlace 70068 (501 Rue De Sante, Suite 10, 504–565–4705)
Monroe 71203 (250 De Siard Plaza Dr., 318–343–6100)
New Orleans 70161–1011 (1601 Perdido St., Mailing Address: P.O. Box 61011, 800–935–8387/504–412–3700)
Slidell 70461 (340 Gateway Dr., 1–800–935–8387)

Regional Office

Gretna 70056 (671A Whitney Ave., statewide 1–800–827–1000)

Vet Centers

Baton Rouge 70809 (5207 Essen Lane, Suite 2, 225–757–0045)
Kenner 70062 (2200 Veterans Blvd., Suite 114, 504–464–4743)
Shreveport 71104 (2800 Youree Dr., Bldg. 1, Suite 1, 318–861–1776)

National Cemeteries

Alexandria 71360 (209 E. Shamrock St., Pineville, 601–445–4981)
Baton Rouge 70806 (220 N. 19th St., 225–654–3767)
Port Hudson 70791 (20978 Port Hickey Rd., Zachary, 225–654–3767)

Maine

VA Medical Center

Augusta 04330 (1 VA Center, 207–623–8411 or 877–421–8263)

Clinics

Bangor 04401 304 Hancock St., Suite 3B, 207–561–3600)
Calais 04619 (50 Union St., 207–904–3700)
Caribou 04736 (163 Van Buren Drive, Suite 6, 207–493–3800)
Lincoln 04457 (99 River Road, 207–403–2000)
Rumford 04726 (431 Franklin St., 207–369–3200)
Saco 04072 (655 Main St., 207–294–3100)

Vet Centers

Bangor 04401 (368 Harlow St., 207–947–3391)
Caribou 04619 (456 York St., York Street Complex, 207–496–3900)
Lewiston 04240 (Pkwy Complex, 29 Westminster St., 207–783–0068)
Portland 04103 (475 Stevens Ave., 207–780–3584)
Springvale 04083 (628 Main St., 207–490–1513)

National Cemetery

Togus 04330 (1 VA Center, 508–563–7113)

Maryland

VA Medical Centers

Baltimore 21201 (10 North Greene St., 410–605–7000 or 800–463–6295)
Baltimore—Rehabilitation and Extended Care Center 21218 (3900 Loch Raven Boulevard, 410–605–7000)
Perry Point 21902 (410–642–2411 or 800 949–1003)

Clinics

Baltimore-Loch Raven 21218 (3901 The Alameda, 410–605–7651)
Cambridge 21613 (830 Chesapeake Dr., 410–228–6243 or 877–864–9611)
Charlotte Hall 20622 (State Veterans Home, 29431 Charlotte Hall Rd., 301–884–7102)
Cumberland 21502 (200 Glenn St., 301–724–0061)
Fort Howard 21052 (9600 North Point Rd., 410–477–1800 or 800–351–8387)
Glen Burnie 21061 (808 Landmark Dr., Suite 128, 410–590–4140)
Greenbelt 20770 (7525 Greenway Center Dr., Professional Cntr., #T–4, 301–345–2463)
Hagerstown 21742 (Hub Plaza Bldg, 1101 Opal Ct., 301–665–1462)
Pocomoke 21851 (101B Market St., 410–957–6718)

Regional Office

Baltimore 21201 (31 Hopkins Plaza Federal Bldg., 1–800–827–1000)

Vet Centers

Baltimore 21207 (6666 Security Blvd., Suite 2, 410–277–3600)
Cambridge 21613 (5510 West Shore Dr., 410–228–6305 ext. 4123)
Elkton 21921 (103 Chesapeake Blvd., Suite A, 410–392–4485)
Silver Spring 20910 (1015 Spring St., Suite 101, 301–589–1073)

National Cemeteries

Annapolis 21401 (800 West St., 410–644–9696)
Baltimore 21228 (5501 Frederick Ave., 410–644–9696)
Loudon Park 21228 (3445 Frederick Ave., Baltimore, 410–644–9696)

Massachusetts

VA Medical Centers

Bedford 01730 (200 Springs Rd., 781–687–2000 or 800–422–1617)
Brockton 02301 (940 Belmont St., 508–583–4500)
Jamaica Plain 02130 (150 South Huntington Ave., 617–232–9500)
Leeds 01053–9764 (Northampton VA, 421 N Main St., 413–584–4040 or 800–893–1522)
West Roxbury 02132 (1400 VFW Parkway, 617–323–7700)

Clinics

Boston 02114 (251 Causeway St., 617–248–1000)
Dorchester 02121 (895 Blue Hill Ave, 617–822–7146)
Fitchburg 01420 (Burbank Hospital, 275 Nichols Rd., 978–342–9781)
Framingham 01702 (61 Lincoln St., Suite 112, 508–628–0205)
Gloucester 01930 (Addison Gilbert Hosp., 298 Washington St., 978–282–0676 x1782)
Greenfield 01301 (143 Munson St., 413–773–8428)
Haverhill 01830 (108 Merrimack St., 978–372–5207)
Hyannis 02601 (145 Falmouth Rd., 508–771–3190)
Lowell 01852 (130 Marshall Rd., 978–671–9000)
Lynn 01904 (225 Boston Rd., Suite 107, 781–595–9818)
Martha's Vineyard 02557 (Hospital Rd., 508–693–0410
Nantucket 02554 (Nantucket Cottage Hospital, 57 Prospect St., 508–825–VETS)
New Bedford 02740 (174 Elm St., 508–994–0217)
Pittsfield 01201 (73 Eagle St., 413–443–4857)
Quincy 02169 (Quincy Medical Center, 2nd floor, 114 Whitwell St., 617–376–2010)
Springfield 01104 (25 Bond St., 413–731–6000)
Worcester 01605 (605 Lincoln St., 508–856–0104)

Regional Office

Boston 02203–0393 (JFK Federal Building, Room 1265, Government Center, statewide 1–800–827–1000) (Towns of Fall River & New Bedford, counties of Barnstable, Dukes, Nantucket, Bristol, part of Plymouth served by Providence, R.I., VA Regional Office)

Vet Centers

Boston 02215 (665 Beacon St., 617–424–0665)
Brockton 02401 (1041–L Pearl St., 508–580–2730)
Hyannis 02601 (474 West Main St., (508–778–0124)
Lowell 01852 (73 East Merrimack St., 978–453–1151)
New Bedford 02740 (468 North St., 508–999–6920)
Springfield 01103 (1985 Main St., Northgate Plaza, 413–737–5167)
Worcester 01605 (691 Grafton St., 508–753–7902)

National Cemetery

Massachusetts 02532 (Connery Ave., Bourne, 508–563–7113)

Michigan

VA Medical Centers

Ann Arbor 48105 (2215 Fuller Rd., 734–769–7100 or 800–361–8387)
Battle Creek 49015 (5500 Armstrong Rd., 269–966–5600 or 888–214–1247)
Detroit 48201 (4646 John R. St., 313–576–1000 or 800–511–8056)
Iron Mountain 49801 (325 East H St., 906–774–3300 or 800–215–8262)
Saginaw 48602 (1500 Weiss St., 989–497–2500 or 800–406–5143)

Clinics

Benton Harbor 49022 (115 Main St., 269–934–9123)
Flint 48532 (G–3267 Beecher Rd., 810–720–2913)
Gaylord 49735 (806 S. Otsego, 989–732–7525)
Grand Rapids 49505 (3019 Coit St. NE., 616–365–9575)
Hancock 49930–1495 (787 Market St., Quincy Center Suite 9, 906–482–7762)
Ironwood 49938 (629 W. Cloverland Dr., Suite 1, 906–932–0032)
Jackson 49203 (Townsend Family Med., 400 Hinckley Blvd., Suite 300, 517–782–7436)
Kincheloe 49788 (Sault Ste. Marie Clinic: 16523 S. Watertower Dr., #1, 906–495–3030)
Lansing 48910 (2025 S. Washington Ave., 517–267–3925)
Marquette 49855 (425 Fisher St., 906–226–4618)
Menominee 49858 (1101 10th Ave., Suite 101, 906–863–1286)
Muskegon 49442 (165 E. Apple Ave., Suite 201, 231–725–4105)
Oscoda 48750 (5671 Skeel Ave., Suite 4, 989–747–0026)
Pontiac 48340 (1701 Baldwin Ave., Suite 101, 248–409–0585)
Traverse City 49684 (3271 Racquet Club Dr., 231–932–9720)
Yale 48097 (7470 Brockway Dr., 810–387–3211)

Regional Office

Detroit 48226 (Patrick V. McNamara Federal Bldg., 477 Michigan Ave., Rm. 1400, 1–800–827–1000)

Vet Centers

Dearborn 48124–3438 (2881 Monroe St., Suite 100, 313–277–1428)
Detroit 48201 (4161 Cass Ave., 313–831–6509)
Escanaba 49829 (Willow Creek Professional Bldg., 3500 Ludington St.)
Grand Rapids 49507 (1940 Eastern SE., 616–243–0385)
Saginaw 48603 (4048 Bay Rd., 989–321–4650)

National Cemeteries

Fort Custer 49012 (15501 Dickman Rd., Augusta, 269–731–4164)
Great Lakes 48442 (4200 Belford Rd., Holly, 866–348–8603)

Minnesota

VA Medical Centers

Minneapolis 55417 (One Veterans Dr., 612–725–2000 or 866–414–5058)
St. Cloud 56303 (4801 Veterans Dr., 320–252–1670 or 800–247–1739

Clinics

Bemidji 56601 (705 5th St., 218–755–6360)
Brainerd 56401 (11800 State Hwy 18, 218–855–1115)
Fergus Falls 56537 (Veterans Home, 1821 North Park St., 218–739–1400)
Hibbing 55746 (1101 East 37th St., Suite 220, 218–263–9698)
Maplewood 55109 (2785 White Bear Ave., Suite 210, 651–290–3040)
Montevideo 56265 (1025 North 13th St., 320–269–2222)
Rochester 55902 (1617 Skyline Dr., 507–252–0885)
St. James 56081 (1101 Moultin and Parsons Dr., 507–375–3391)

Regional Office

St. Paul 55111 (Bishop Henry Whipple Federal Bldg., 1 Federal Dr., 1–800–827–1000) (Counties of Becker, Beltrami, Clay, Clearwater, Kittson, Lake of the Woods, Mahnomen, Marshall, Norman, Otter Tail, Pennington, Polk, Red Lake, Roseau, Wilkin served by Fargo, N.D., VA Regional Office)

Vet Centers

Duluth 55802 (405 E. Superior St., 218–722–8654)
St. Paul 55114 (2480 University Ave., 651–644–4022)

National Cemetery

Fort Snelling 55450–1199 (7601 34th Ave. So., Minneapolis, 612–726–1127)

Mississippi

Medical Centers

Biloxi 39531 (400 Veterans Ave., 228–523–5000 or 800–296–8872)
Jackson 39216 (1500 E. Woodrow Wilson Dr., 601–362–4471 or 800–949–1009, instate)

Clinics

Byhalia 38611 (12 East Brunswick St., 662–838–2163)
Columbus 39702 (824 Alabama St., 662–244–0391)
Greenville 38703 (1502 S Colorado St., 662–332–9872)
Hattiesburg 39401 (231 Methodist Blvd., 601–296–3530)
Houlka 38850 (106 Walker St., 662–568–3316)
Kosciusko 39090 (332 Hwy 12W, 662–289–1800)
Meadville 39653 (595 Main Street East, 601–384–3650)
Meridian 39301 (13th St., 601–482–7154)
Natchez 39120 (46 Sgt Prentiss Dr., Ste 16, 601–442–7141)

Regional Office

Jackson 39216 (1600 E. Woodrow Wilson Ave., statewide 1–800–827–1000)

Vet Centers

Biloxi 39531 (288 Veterans Ave., 228–388–9938)
Jackson 39216 (1755 Lelia Dr., Suite 104, 601–965–5727)

National Cemeteries

Biloxi 39535–4968 (P.O. Box 4968, 400 Veterans Ave., 228–388–6668)
Corinth 38834 (1551 Horton St., 901–386–8311)
Natchez 39120 (41 Cemetery Rd., 601–445–4981)

Missouri

VA Medical Centers

Columbia 65201–5297 (800 Hospital Dr., 573–814–6000 or 800–349–8262
Kansas City 64128 (4801 Linwood Blvd., 816–861–4700 or 800–525–1483)
Poplar Bluff 63901 (1500 N. Westwood Blvd., 573–686–4151)
Saint Louis-Jefferson Barracks 63125–4101 (1 Jefferson Barracks Dr., 314–652–4100 or 800–228–5459)
Saint Louis-John Cochran Div. 63106 (915 N. Grand Blvd., 314–652–4100 or 800–228–5459)

Clinics

Belton 64012 (17140 Bel-Ray Pl., 816–922–2161)
Camdenton 65020 (Lake of the Ozarks Clinic, 246 E Highway 54, 573–317–1150)
Cameron 64429 (1111 Euclid Dr., 816–922–2500 ext. 54251)
Cape Girardeau 63701 (2420 Veterans Memorial Dr., 573–339–0909)
Farmington 63640 (1580 W. Columbia St., 573–760–1365)
Ft. Leonard Wood 65473 (126 Missouri Ave., Box 1239, 573–329–8305)
Kirksville 63501 (1108 East Patterson, Suite 9, 660–627–8387)
Mexico 65265 (Missouri Veterans Home, One Veterans Dr., 573–581–9630)
Mt Vernon 65712 (600 N Main, 417–466–0118)
Nevada 64772 (322 South Prewitt, 417–448–8905)
Salem 65560 (Hwy 72 North, 573–729–6626 or 1–888–557–8262)
St. Charles 63304 (7 Jason Ct., 314–286–6988)
St. James 65559–1999 (Missouri Veterans Home, 620 N. Jefferson, St., 573 265–0448)
St. Joseph 64506 (1314 North 36th St., Suite A, 1–800–952–8387 ext 56925)
St. Louis 63136 (10600 Lewis and Clark Blvd., 314–286–6988)
Warrensburg 64093 (1300 Veterans Dr., 816 922–2500 ext. 54281)
West Plains 65775 (1211 Missouri Ave, 417–257–2454)

Regional Office

St. Louis 63103 (400 South 18th St., statewide 1–800–827–1000)

Benefits Office

Kansas City 64128 (4801 Linwood Blvd., 816–922–2660 or 1–800–525–1483, x 52660)

Vet Centers

Kansas City 64111 (301 E. Armour Rd., 816–753–1866)
St. Louis 63103 (2345 Pine St., 314–231–1260)

National Cemeteries

Jefferson Barracks 63125 (2900 Sheridan Rd., St. Louis, 314–260–8720)
Jefferson City 65101 (1024 E. McCarty St., 314–260–8720)
Springfield 65804 (1702 E. Seminole St., 417–881–9499)

Montana

VA Medical Centers

Fort Harrison 59636–1500 (3687 Veterans Drive, P.O. Box 1500, 406–442–6410)

Clinics

Anaconda 59711 (118 East 7th St., 406–563–6090)
Billings 59102 (2345 King Avenue West, 406–651–5670)
Cut Bank 59427 (Glacier Community Health, 519 East Main St., 406–873–5670)
Bozeman 59715 (300 N. Wilson, Suite 703G, 406–522–8923)
Glasgow 59230 (621 3rd St., South, Suite 107, 406–228–3554)
Glendive 59330 (2000 Montana Ave., 406–488–2307)
Great Falls 59405 (1417–9th St., South, Suite 200, 877–468–8387 opt 3)
Kalispell 59901 (31 Three Mile Dr Ste 102, 406–751–5980)
Miles City 59301 (Clinic/Nursing Home, 210 S. Winchester, 406–874–5600)
Missoula 59808 (2687 Palmer St., Suite C, 877–468–8387 (temp)

Regional Office

Fort Harrison 59636 (3633 Veterans Dr., PO Box 1500, 1–800–827–1000)

Vet Centers

Billings 59102 (1234 Ave., C, 406–657–6071)
Missoula 59802 (500 N. Higgins Ave., 406–721–4918)

Nebraska

VA Medical Centers

Grand Island 68803–2196 (2201, No. Broadwell Ave., 308–382–3660/866–580–1810)
Lincoln 68510 (600 South 70th St., 402–489–3802/866–851–6052)
Omaha 68105 (4101 Woolworth Ave., 402–346–8800/800–451–5796)

Clinics

Alliance 69301 (524 Box Butte Ave., 605–745–2000 ext. 2474)
Norfolk 68701 (301 N 27th St, Suite #1, 402–844–8000)
North Platte 69101 (600 East Francis, Suite 3, 308–532–6906)
Rushville/Gordon 69343 (300 E. 8th St., 605–745–2000 ext. 2474)
Scottsbluff 69361 (1720 E Portal Place, 308–220–3930)
Sidney 69162 (1116 10th Ave., 308–254–5575)

Regional Office

Lincoln 68516 (5631 S. 48th St., statewide 1–800–827–1000)

Vet Centers

Lincoln 68508 (920 L St., 402–476–9736)
Omaha 68131 (2428 Cuming St., 402–346–6735)

National Cemetery

Fort McPherson 69151–1031 (12004 S. Spur 56A, Maxwell, 888–737–2800)

Nevada

VA Medical Centers

Las Vegas 89106 (901 Rancho Lane, Mailing Address P.O. Box 360001, North Las Vegas, NV 89036, 702–636–3000/888–633–7554)
Reno 89502 (1000 Locust Street, 775–786–7200 or 888–838–6256)

Clinics

Ely 89301 (William B. Ririe Hospital, 6 Steptoe Circle, 775–289–3612)
Fallon 89406 (Lahontan Valley Outpatient Clinic: 345 West A St., 775–428–6161)
Henderson 89014 (2920 N. Greenvalley Pkwy. Suite 215, 702–636–6363)
Las Vegas 89106 (Center for Homeless Veterans, 916 West Owens Ave., 702–636–6380)

Minden 89423 (Carson Valley Clinic, 925 Ironwood Dr., #2102, 888–838–6256 x4000)
Pahrump 89048 (2100 E. Calvada Blvd., 775–727–7535)

Regional Office

Reno 89520 (5460 Reno Corporate Dr., statewide 1–800–827–1000)

Benefits Office

Las Vegas 89107 (4800 Alpine Pl., Suite 12, 1–800–827–1000)

Vet Centers

Las Vegas 89146 (1919 So. Jones Blvd., Suite A., 702–251–7873)
Reno 89503 (1155 W. 4th St., Suite 101, 775–323–1294)

New Hampshire

VA Medical Center

Manchester 03104 (718 Smyth Road, 603–624–4366 or 800–892–8384) Conway 03818 (7 Greenwood Ave., 603–447–3500 ext. 11)
Littleton 03561 (Littleton Regional Hospital, 600 St. Johnsbury Rd., 603–444–9328)
Portsmouth 03803 (Pease Intl., Tradeport 302 Newmarket St., 603–624–4366 x5500)
Somersworth 03878 (200 Route 108, 603–624–4366, Ext. 5700)
Tilton 03276 (NH Veterans Home, 139 Winter St., 603–624–4366 ext. 5600)

Regional Office

Manchester 03101 (Norris Cotton Federal Bldg., 275 Chestnut St., 1–800–827–1000)

Vet Center

Manchester 03104 (103 Liberty St., 603–668–7060/61)

New Jersey

VA Medical Centers

East Orange 07018 (385 Tremont Avenue, 973–676–1000)
Lyons 07939 (151 Knollcroft Road, 908–647–0180)

Clinics

Brick 08724 (970 Rt. 70, 732–206–8900)
Cape May 08204 (1 Monroe Ave., 609–898–8700)
Elizabeth 07206 (654 East Jersey Street, Suite 2A, 908–994–0120)
Fort Monmouth 07703 (Paterson Army Health Clinic, Building 1075, Stephenson Ave., 732–532–4500)
Ft. Dix 08640 (Marshall Hall, 8th and Alabama, 609–562–2999)
Hackensack 07601 (385 Prospect Avenue, 201–487–1390)
Jersey City 07302 (115 Christopher Columbus Dr., 201–435–3055/3305)
Morristown 07960 (340 West Hanover Ave., 973–539–9791/9794)
New Brunswick 08901 (317 George Street, 732–729–0646/9555)
Newark 07102 (20 Washington Place, 973–645–1441)
Paterson 07503 (275 Getty Ave., St. Joseph's Hospital & Med. Center, 973–247–1666)
Sewell 08080–2525 (211 County House Road, 856–401–7665)
Trenton 08611–2425 (171 Jersey Street, Bldg. 36, 609–989–2355)
Ventnor 08406 (6601 Ventnor Avenue, Suite 406, 609–823–3122)
Vineland 08360 (Veterans Memorial Home, Northwest Boulevard, 856–692–1588)
Vineland 08360 (1051 West Sherman Ave., 856–692–2881)

Regional Office

Newark 07102 (20 Washington Pl., statewide 1–800–827–1000) (Philadelphia, PA Regional Office serves counties of Atlantic, Burlington, Camden, Cape May, Cumberland, Gloucester, Salem)

Vet Centers

Bloomfield 07003 (2 Broad St., Suite 703, 973–748–0980)
Jersey City 07302 (115 Christopher Columbus Dr., Suite 200, 201–748–4467)
Ewing 08618 (934 Parkway Ave., 2nd Fl., 609–882–5744)
Ventnor 08406 (6601 Ventnor Ave., Suite 105, 609–487–8387)

National Cemeteries

Beverly 08010 (916 Bridgeboro Rd., 609–880–0827)
Finn's Point 08079 (Box 542, R.F.D. 3, Fort Mott Rd., Salem, 609–880–0827)

New Mexico

VA Medical Center

Albuquerque 87108–5153 (1501 San Pedro Dr., SE., 505–265–1711 or 800–465–8262)

Clinics

Alamogordo 88310 (1410 Aspen, 505–437–7000)
Artesia 88210–3712 (1700 W. Main St., 505–746–3531)
Clovis 88101 (921 East Llano Estacado, 505–763–4335)
Espanola 87532 (620 Coronado St., Suite B, 505–753–7395)
Farmington 87401–5638 (1001 W. Broadway, Suite B, 505–326–4383)
Gallup 87301 (320 Hwy. 564, 505–722–7234)
Hobbs 88340 (1601 N. Turner (4th Floor), 505–391–0354)
Las Cruces 88001 (1635 Don Roser, 505–522–1241)
Las Vegas 87701 (1235 8th St., Las Vegas, 505–425–6788)
Raton 87440–2234 (1275 S. 2nd St., 505–445–2391)
Santa Fe 87505 (2213 Brothers Road, Suite 600, 505–986–8645)
Silver City 88601 (1302 32nd St., 505–538–2921)
Truth or Consequences 87901 (1960 North Date St., 505–894–7662)

Regional Office

Albuquerque 87102 (Dennis Chavez Federal Bldg., 500 Gold Ave SW., statewide 1–800–827–1000)

Vet Centers

Albuquerque 87104 (1600 Mountain Rd. NW., 505–346–6562)
Farmington 87402 (4251 E. Main, Suite C, 505–327–9684)
Las Cruces 88001 (230 S. Water St., 575–523–9826)
Santa Fe 87505 (2209 Brothers Rd., Suite 110, 505–988–6562)

National Cemeteries

Fort Bayard 88036 (P.O. Box 189, 915–564–0201)
Santa Fe 87501 (501 N. Guadalupe St., 505–988–6400 or toll-free 877–353–6295)

New York

VA Medical Centers

Albany 12208 (113 Holland Ave., 518–626–5000)
Batavia 14020 (222 Richmond Ave., 585–297–1000 or 888–798–2302)
Bath 14810 (76 Veterans Ave., 607–664–4000 or 877–845–3247)
Bronx 10468 (130 West Kingsbridge Rd., 718–584–9000 or 800–877–6976)
Brooklyn 11209 (800 Poly Place, 718–836–6600)
Buffalo 14215 (3495 Bailey Ave., 716–834–9200 or 800–532–8387)
Canandaigua 14424 (400 Fort Hill Ave., 585–394–2000)
Castle Point 12511 (Route 9D, 845–831–2000 or 800–269–8749)
Montrose 10548 (2094 Albany Post Rd., Route 9A, P.O. Box 100, 914–737–4400 ext. 2400 or 800–269–8749)
New York 10010 (423 East 23rd Street, 212–686–7500)
Northport 11768 (79 Middleville Road, 631–261–4400 or 800–551–3996)
Syracuse 13210 (800 Irving Ave., 315–425–4400 or 800–792–4334)

Domicialiaries

Jamaica 11425 (St. Albans Primary & Extended Care Center, 179–00 Linden Blvd. & 179 St., 718–526–1000)
Montrose 10548 ((2094 Albany Post Rd., Route 9A, P.O. Box 100, 914–737–4400)

Clinics

Auburn 13021 (17 Lansing St., 315–255–7002)
Bainbridge 13733 (109 North Main St., 607–967–8590)
Binghamton 13901 (Garvin Building, 425 Robinson St., 607–772–9100)
Bronx 10459 (953 Southern Blvd., 718–741–4900)
Brooklyn 11201 (40 Flatbush Ave. Extension, 8th Fl., 718–439–4300)
Carmel 10512 (Warwick Savings Bank, 2nd Fl, 1875 Rt 6, 845–228–Carthage 13619 (3 Bridge St., 315–493–4180)
Catskill 12414 (Columbia Greene Medical Arts Building, Suite A102, 159, Jefferson Hgts., 518–943–7515)
Clifton Park 12065 (1673 Route 9, 518–383–8506)
Cortland 13045 (1104 Commons Avenue, 607–662–1517)
Dunkirk 14048 (166 East 4th St., 800–310–5001)
Elizabethtown 12932 (P.O. Box 277 Park St., 518–873–3295)
Elmira 14901 (200 Madison Avenue Suite 2E, 877–845–3247)
Fonda 12068 (2623 State Highway 30A, 518–853–1247)
Glens Falls 12801 (84 Broad St., 518–798–6066)
Goshen 10924 (30 Hatfield Lane, Suite 204, 845–294–6927)
Ithaca 14850 (10 Arrowwood Drive, 607–274–4680)

Jamestown 14701 (The Resource, Center, 896 East Second St., 716–661–1447)
Kingston 12401 (63 Hurley Ave., 845–331–8322)
Lackawanna 14218 (OLV Family Care Center, 227 Ridge Rd., 716–822–5944)
Lockport 14094 (Ambulatory Care Center, 5875 S. Transit Rd., 716–433–2025)
Malone 12953 (183 Park St., 518–481–2545)
Massena 13662 (Memorial Hospital, 1 Hospital Dr., 315–769–4253)
Monticello 12701 (60 Jefferson Street, Unit 3, Lower Parking Lot, 845–791–4936)
New City 10970 (20 Squadron Blvd., 845–634–8942)
New York 10027 (55 West 125th St., 212–828–5265)
New York 10011 (Opiate Substitution Program, 437 W 16 St., 212–462–4461)
Niagara Falls 14301–2300 (2201 Pine Avenue, 1–800–223–4810 ext. 65295)
Olean 14760–2658 (465 North Union St., 716–373–7709)
Oswego: 13126 (105 County Route 45A Suite 400, 315–343–0925)
Patchogue 11772 (4 Phyllis Drive, 631–475–6610/PC 631–758–4419)
Pine Plains 12567 (2881 Church St., Rt. 199, 518–398–9240)
Plainview 11803 (1425 Old Country Rd., 516–572–8567/PC 516–694–6008)
Plattsburgh 12901 (80 Sharron Ave. 518–561–6247)
Port Jervis 12771 (150 Pike St., 845–856–5396)
Poughkeepsie 12603 (Rt. 55, 488 Freedom Plains Rd., Suite 120, 845–452–5151)
Rochester 14620 (465 Westfall Rd., 585–463–2600)
Rome 13441 (125 Brookley Road, Building 510, 315–334–7100)
Schenectady 12308 (1322 Gerling Street, Sheridan Plaza, 518–346–3334)
Staten Island 10314 (1150 South Ave., 3rd Floor—Suite 301, 718–761–2973)
Sunnyside 11104 (41–03 Queens Blvd., 718–741–4800)
Troy 12180 (295 River St., 518–274–7707)
Warsaw 14569 (Wyoming Co. Community Hospital, 400 N. Main St., 585–786–2233)
Wellsville 14895 (3458 Riverside Dr., Route 19, 1–877–845–3247)
Westhampton 11978 (Community Air Base: 150 Old Riverhead Rd., 631–898–0599)
White Plains 10601 (23 South Broadway, 914–421–1951)
Yonkers 10705 (124 New Main St., 914–375–8055)

Regional Offices

Buffalo 14202 (Niagara Center, 130 S. Elmwood Ave., 1–800–827–1000. Serves counties not served by New York City VA Regional Office.)
New York City 10014 (245 W. Houston St., statewide 1–800–827–1000. Serves counties of Albany, Bronx, Clinton, Columbia, Delaware, Dutchess, Essex, Franklin, Fulton, Greene, Hamilton, Kings, Montgomery, Nassau, New York, Orange, Otsego, Putnam, Queens, Rensselaer, Richmond, Rockland, Saratoga, Schenectady, Schoharie, Suffolk, Sullivan, Ulster, Warren, Washington, Westchester.)

Benefits Offices

Albany 12208 (113 Holland Ave., 1–800–827–1000) Rochester 14620 (465 Westfall Rd., 1–800–827–1000)
Syracuse 13202 (344 W. Genesee St., 1–800–827–1000)

Vet Centers

Albany 12205 (17 Computer Drive West, 518–626–5130)
Babylon 11702 (116 West Main St., 631–661–3930)
Bronx 10458 (130 West Kingsbridge Rd., Rm. 7A–13, 718–367–3500)
Brooklyn 11201 (25 Chapel St., Suite 604, 718–624–2765)
Buffalo 14202 (564 Franklin St., 716–882–0505)
New York 10004 (32 Broadway, Suite 200, 212–742–9591)
New York 10027 (55 West 125th St., 11th Fl., 212–426–2200)
Rochester 14620 (1867 Mt. Hope Ave., 585–232–5040)
Staten Island 10301 (150 Richmond Terrace, 718–816–4499)
Syracuse 13210 (716 E. Washington St., 315–478–7127)
White Plains 10601 (300 Hamilton Ave., 1st Fl., 914–682–6250)
Watertown 02601 (210 Court St., 315–782–0217
Woodhaven 11421 (75–10B 91st Ave., 718–296–2871)

National Cemeteries

Bath 14810 (76 Veterans Ave., San Juan Ave., 607–664–4853)
Calverton 11933–1031 (210 Princeton Blvd., 631–727–5410/5770)
Cypress Hills 11208 (625 Jamaica Ave., Brooklyn, 631–454–4949)
Long Island 11735–1211 (2040 Wellwood Ave., Farmingdale, 631–454–4949)
Saratoga 12871–1721 (200 Duell Rd., Schuylerville, 518–581–9128)
Woodlawn 14901 (1825 Davis St., Elmira, 607–732–5411)

North Carolina

VA Medical Centers

Asheville 28805 (1100 Tunnel Road, 828–298–7911 or 800–932–6408)
Durham 27705 (508 Fulton St., 919–286–0411)
Fayetteville 28301 (2300 Ramsey St., 910–488–2120 or 800–771–6106)
Salisbury 28144 (1601 Brenner Avenue, 704–638–9000 or 800–469–8262)

Clinics

Charlotte 28262 (Presbyterian Plaza 8401 Medical Ctr. Dr. #350, 704–547–0020)
Durham 27705 (1824 Hillandale Road, 919–383–6107)
Greenville 27858 (800 Moye Blvd., 252–830–2149)
Jacksonville 28540 (1021 Hargett St., 910–219–1339)
Morehead City 28557 (5420 Highway 70, 252–240–2349)
Raleigh 27610 (3305 Sungate Blvd., 919–212–0129)
Wilmington 28401 (1606 Physicians Dr., Suite 104, 910–362–8811)
Winston-Salem 27103 (190 Kimel Park Drive, 336–768–3296)

Regional Office

Winston-Salem 27155 (Federal Bldg., 251 N. Main St., statewide 1–800–827–1000, nationwide Loan Guaranty Certificate of Eligibility Center 1–888–244–6711)

Vet Centers

Charlotte 28202 (223 S. Brevard St., Suite 103, 704–333–6107)
Fayetteville 28311 (4140 Ramsey St., Suite 110, 910–488–6252)
Greensboro 27406 (2009 S. Elm-Eugene St., 336–333–5366)
Greenville 27858 (150 Arlington Blvd., Suite B, 252–355–7920)
Raleigh 27604 (1649 Old Louisburg Rd., 919–856–4616)

National Cemeteries

New Bern 28560 (1711 National Ave., 252–637–2912)
Raleigh 27610–3335 (501 Rock Quarry Rd., 252–637–2912)
Salisbury 28144 (202 Government Rd., 704–636–2661/4621)
Wilmington 28403 (2011 Market St., 252–637–2912)

North Dakota

VA Medical Center

Fargo 58102 (2101 Elm Street, 701–232–3241 or 800–410–9723)

Clinics

Bismarck 58503 (2700 State Street, 701–221–9152)
Dickinson 58601 (33 9th Street, 701–483–6017)
Grafton 58237 (Developmental Center Health Bldg., West Sixth St., 701–352–4059)
Jamestown 58401 (419 Fifth Street NE., 701–952–4787)
Minot 58705 (10 Missile Avenue, 701–727–9800)
Williston 58801 (3 Fourth Street East, Suite 104, 701–577–9838)

Regional Office

Fargo 58102 (2101 Elm St., statewide 1–800–827–1000)

Vet Centers

Bismarck 58501 (1684 Capital Way, 701–224–9751)
Fargo 58103 (3310 Fiechtner Dr., Suite 100, 701–237–0942)
Minot 58701 (2041 3rd St. NW., 701–852–0177)

Ohio

VA Medical Centers

Brecksville 44141 (10000 Brecksville Rd., 440–526–3030)
Chillicothe 45601 (17273 State Route 104, 740–773–1141 or 800–358–8262)
Cincinnati 45220 (3200 Vine Street, 513–861–3100 or 888–267–78730)
Cleveland 44106 (10701 East Blvd., 216–791–3800)
Columbus 43203 (543 Taylor Avenue, 614–257–5200 or 888–615–9448)
Dayton 45428 (4100 W. 3rd Street, 937–268–6511 or 800–368–8262)

Clinics

Akron 44319 (55 W. Waterloo 330–724–7715)
Ashtabula 44004 (1230 Lake Avenue, 440–964–6454)
Athens 45701 (510 West Union Street 740–593–7314)
Cambridge 43727 (2146 Southgate Pkwy., 740–432–1963)
Canton 44702 (733 Market Avenue South, 330–489–4600)
Cincinnati 45245 (4355 Ferguson Drive, Suite 270, 513–943–3680)
Cleveland 44113 (4242 Loraine Ave., 216–939–0699)
East Liverpool 43920 (15655 St Rt. 170, 330–386–4303)
Grove City 43123 (1955 Ohio Avenue, 614–257–5800)
Hamilton 45011 (1755–C South Erie Highway, 937–378–3413)
Lancaster 43130 (1550, Sheridan Drive Ste. 100, 740–653–6145)
Lima 45804 (1303 Bellefontaine Ave., 419–222–5788)
Lorain 44052 (205 West 20th Street, 440–244–3833
Mansfield 44906 (1456 Park Avenue West, 419–529–4602)
Marietta 45750 (418 Colegate Drive, 740–568–0412)
Marion 43302 (1203 Delaware Avenue, Corporate Center #2, 740–223–8089)
Middletown: 45042 (675 North University Boulevard, 513–423–8387)
New Philadelphia 44663 (1260 Monroe Ave., Suite 1A, New 330) 602–5339)
Newark 43055 (Tamarck Rd., 740–788–8328)
Painesville 44077 (7 West Jackson Street, 440–357–6740)
Portsmouth 45622 (621 Broadway Street, 740–353–3236)
Ravenna 44266 (6751 N. Chestnut St., 330–296–3641) Sandusky 44870 (3416 Columbus Avenue, 419–625–7350)
Springfield 45505 (512 South Burnett Road, 937–328–3385
St. Clairsville 43950 (107 Plaza Dr., 740–695–9321)
Toledo 43614 (3333 Glendale Avenue, 419–259–2000)
Warren 44485 (1400 Tod Ave. (NW), 330–392–0311)
Youngstown 44505 (2031 Belmont Avenue, 330–740–9200)
Zanesville 43701 (840 Bethesda Dr. Bldg. 3A, 740–453–7725)

Regional Office

Cleveland 44199 (Anthony J. Celebrezze Fed. Bldg., 1240 E. 9th St., 1–800–827–1000)

Benefits Offices

Cincinnati 45202 (36 E. Seventh St., Suite 210, 1–800–827–1000)
Columbus 43215 (Federal Bldg., Rm. 309, 200 N. High St., 1–800–827–1000)

Vet Centers

Cincinnati 45203 (801–B W. 8th St., 513–763–3500)
Cleveland Heights 44118 (2022 Lee Rd., 216–932–8471)
Columbus 43215 (30 Spruce St., 614–257–5550)
Dayton 45402 (111 W 1st St., Suite 101, 937–461–9150)
Parma 44129 (5700 Pearl Rd., Suite 102, 440–845–5023)

National Cemeteries

Dayton 45428–1088 (4100 W. Third St., 937–262–2115)
Ohio Western Reserve 44270 (10175 Rawiga Rd., Rittman, 330–335–3069)

Oklahoma

VA Medical Centers

Muskogee 74401 (1011 Honor Heights Drive, 918–577–3000 or 888–397–8387)
Oklahoma City 73104 (921 NE. 13th Street, 405–270–0501 or 866–835–5273)

Clinics

Ardmore: 73401(1015 S. Commerce, 580–223–2266)
Fort Sill 73503 (4303 Pittman and Thomas Bldg. 580–353–1131)
Konawa 74849 (527 W 3rd St. P.O. Box 358, 580–925–3286)
Tulsa 74145 (9322 East 41st St., 918–628–2500)
Ponca City 74601 (215 N. 3rd, 580–762–1777)

Regional Office

Muskogee 74401 (Federal Bldg., 125 S. Main St., Compensation & Pension: 1–800–827–1000, Education National Call Center: 1–888–442–4551, National Direct Deposit: 1–877–838–2778)

Benefits Office

Oklahoma City 73102 (Federal Campus, 301 NW 6th St., Suite 113, 1–800–827–1000)

Vet Centers

Oklahoma City 73118 (1024 NW. 47th, 405–270–5184)
Tulsa 74112 (1408 S. Harvard, 918–748–5105)

National Cemeteries

Fort Gibson 74434 (1423 Cemetery Rd., 918–478–2334)
Fort Sill 73538 (2648 NE Jake Dunn Rd., 580–492–3200)

Oregon

VA Medical Centers

Portland 97239 (3710 SW U.S. Veterans Hospital Rd., 503–220–8262 or outside Portland area 800–949–1004)
Roseburg 97470 (913 NW Garden Valley Blvd., 541–440–1000 or 800–549–8387

Domiciliary

White City 97503 (8495 Crater Lake Hwy., 541–826–2111)

Clinics

Bandon 97411 (1010 1st Street SE., Suite 100, 541–347–4736)
Bend 97701 (2115 NE Wyatt Ct., Suite 201, 503–220–8262 or outside Portland area 800–949–1004 × 51494)
Brookings 97415 (555 Fifth Street, 541–412–1152)
Eugene 97404 (100 River Ave., 541–607–0897)
Klamath Falls 97601 (2819 Dahlia St., 541–273–6206)
Ontario 97914 (20 SW 3rd, 208–422–1303)
Portland 97220 (10535 NE Glisan St., Gateway Medical Bldg., 2nd Fl., 503–220–8262 or outside Portland area 800–949–1004)
Salem 97301 (1660 Oak Street SE., 503–220–8262 or outside Portland 800–949–1004)
Warrenton 97146 (91400 Rilea Neacoxie St., Building 7315, 503–220–8262 or outside Portland area 800–949–1004)

Regional Office

Portland 97204 (Edith Green/Wendell Wyatt Federal Building, 1220 SW. Third Ave., 1–800–827–1000)

Vet Centers

Eugene 97403 (1255 Pearl St., 541–465–6918)
Grants Pass 97526 (211 SE. 10th St., 541–479–6912)
Portland 97220 (8383 NE. Sandy Blvd., Suite 110, 503–273–5370)
Salem 97301 (617 Chemeketa St., NE., 503–362–9911)

National Cemeteries

Eagle Point 97524 (2763 Riley Rd., 541–826–2511)
Roseburg 97470 (1770 Harvard Blvd., 541–826–2511)
Willamette 97266–6937 (11800 SE. Mt. Scott Blvd., Portland, 503–273–5250)

Pennsylvania

VA Medical Centers

Latona 16602 (2907 Pleasant Valley Boulevard, 814–943–8164)
Butler 16001 (325 New Castle Road, 724–287–4781 or 800–362–8262)
Coatesville 19320 (1400 Black Horse Hill Road, 610–384–7711)
Erie 16504 (135 East 38 Street, 814–868–8661 or 800–274–8387)
Lebanon 17042 (1700 South Lincoln Avenue, 717–272–6621 or 800–409–8771)
Philadelphia 19104 (University and Woodland Aves., 800–949–1001 or 215–823–5800)
Pittsburgh 15260 (Delafield Road, 866–482–7488 or 412–688–6000)
Pittsburgh 15206 (Highland Drive Division: 7180 Highland Drive, 412–365–4900 or 1–866–4VAPITT)
Pittsburgh 15240 (University Drive Division: University Drive, 1–866–482–7488)
Wilkes-Barre 18711 (1111 East End Blvd., 570–824–3521 or 877–928–2621)

Clinics

Allentown 18103 (3110 Hamilton Boulevard, 610–776–4304)
Bangor 18013 (701 Slate Belt Boulevard, 610–599–0127)
Berwick 18603 (301 W. Third Street, 570–759–0351)
Camp Hill 17011 (25 N. 32nd Street, 717–730–9782)
DuBois 15801 (190 West Park Avenue, Suite 8, 814–375–6817)
Ellwood City 16117 (Ellwood City Hospital, Medical Arts Building, #201, 304 Evans Drive, 724–285–2203)
Foxburg 16036 (ACV Medical Center, 855 Route 58, Suite 1, 724–659–5601)
Frackville 17931 (10 East Spruce St., 570–621–4904) Greensburg 15601 (Hempfield Plaza, Route 30, 724–837–5200)
Hermitage 16148 (295 N. Kerrwood Dr., Suite 110, 724–346–1569)

Horsham 19044 (433 Caredean Dr., 215–823–6050)
Johnstown 15904 (1425 Scalp Ave., Suite 29, 814–266–8696)
Kittanning 16201 (Armstrong Memorial Hospital 1 Nolte Dr., 724–543–8711)
Lancaster 17605 (1861 Charter Lane, Green Field Corp. Center, # 118, 717–290–6900)
Meadville 16335 (18955 Park Ave. Plaza, 814–337–0170)
Monaca 15061 (90 Wagner Rd., 724–216–0326)
New Castle 16101 (Jameson Hospital, 1000, S. Mercer Street, 724–285–2203)
Oil City 16301 (174 Bissell Avenue, 814–678–2631)
Oil City 16301 (Venango County Clinic, UPMC Northwest, 174 E Bissell Ave., 814–677–7591 or 800–274–8387)
Philadelphia 19106 (214 North 4th Street, 215–923–2600)
Pottsville 17901 (Good Sama. Med. Mall, 700 Schuylkill Manor Rd., #6, 570–621–4115)
Reading 19601 (St. Joseph's Community Center, 145 N. 6th St., 610–208–4717)
Sayre 18840 (1537 Elmira St., 570–888–6803)
Schuylkill 17972 (6 South Greenview Rd., 570–621–4115)
Smethport 16749 (406 Franklin Street, 814–887–5655)
Spring City 19475 (11 Independence Drive 610–948–0981)
Springfield 19064 (Crozer Keystone Healthplex, 194 W. Sproul, Rd., #105, 610–543–3246)
State College 16801 (3048 Enterprise Drive, 814–867–5415)
Tobyhanna 18466 (Tobyhanna Army Depot Building 220, 570–895–8341)
Uniontown 15401 (404 W. Main St., 724–439–4990)
Warren 16365 (3 Farm Colony Dr., 814–723–9763)
Washington 15301 (100 Ridge Avenue, 724–250–7790)
Wilkes-Barre 18711 (1111 East End Boulevard, 570–924–3521)
Williamsport 17701 (1705 Warren Ave., Werner Blg–3rd Fl., #304, 570–322–4791)
York 17402 (1797 Third Avenue, 717–854–2481 or 717–854–2322)

Regional Offices

Philadelphia 19101 (Regional Office and Insurance Center, P.O. Box 8079, 5000 Wissahickon Ave., 1–800–827–1000; Serves counties of Adams, Berks, Bradford, Bucks, Cameron, Carbon, Centre, Chester, Clinton, Columbia, Dauphin, Delaware, Franklin, Juniata, Lackawanna, Lancaster, Lebanon, Lehigh, Luzerne, Lycoming, Mifflin, Monroe, Montgomery, Montour, Northampton, Northumberland, Perry, Philadelphia, Pike, Potter, Schuylkill, Snyder, Sullivan, Susquehanna, Tioga, Union, Wayne, Wyoming, York.) Pittsburgh 15222 (1000 Liberty Ave., statewide 1–800–827–1000. Serves remaining counties of Pennsylvania.)

Benefits Office

Wilkes-Barre 18702 (1123 East End Blvd., Bldg. 35, Suite 11, 1–800–827–1000)

Vet Centers

Erie 16501 (1000 State St., Suite 1&2, 814–453–7955)
Harrisburg 17102 (1500 N. 2nd St., Suite 2, 717–782–3954)
McKeesport 15131 (2001 Lincoln Way, 412–678–7704)
Philadelphia 19107 (801 Arch St., Suite 102, 215–627–0238)
Philadelphia 19120 (101 E. Olney Ave., 215–924–4670)
Pittsburgh 15205 (2500 Baldwick Rd., Suite 15, 412–920–1765)
Scranton 18505 (1002 Pittston Ave., 570–344–2676)
Williamsport 17701 (805 Penn St., 570–327–5281)

National Cemeteries

Indiantown Gap 17003–9618 (R.R. 2, P.O. Box 484, Indiantown Gap Rd., Annville, 717–865–5254)
Cemetery of the Alleghenies 15017 (1158 Morgan Rd., Bridgeville, 724–746–4363)
Philadelphia 19138 (Haines St. & Limekiln Pike, 609–877–5460)

Philippines

Clinic

Pasay City 1300 (2201 Roxas Blvd., 011–632–833–4566)

Regional Office

Manila 0930 (1131 Roxas Blvd., 011–632–528–6300, International Mailing Address: PSC 501, FPO AP 96515–1100)

Puerto Rico

Medical Center

San Juan 00921–3201 (10 Casia Street, 787–641–7582 or 800–449–8729)

Clinics

Arecibo 00612 (Victor Rojas II/Zona Industrial Carr. 129, 787–816–1818)
Guayama 00784 (FISA Bldg 1st Floor, Paseo Del Pueblo, km 0.3, lote no 6, 787–866–8766)
Mayagüez 00680–1507 (Avenida Hostos #345, 787–265–8805)
Ponce 00716–2001 (Paseo Del Veterano #1010, 787–812–3030)

Regional Office

San Juan 00918–1703 (150 Carlos Chardon Ave., Suite 300. Send mail to Suite 232. Serving all Puerto Rico and the Virgin Islands, 1–800–827–1000)

Benefits Offices

Mayaguez 00680–1507 (Ave. Hostos 345, Carretera 2, Frente al Centro Medico, 1–800–827–1000)
Ponce 00731 (10 Paseo del Veterano, 1–800–827–1000)
Arecibo 00612 (Gonzalo Marin 50, 1–800–827–1000)

Vet Centers

Arecibo 00612–4702 (52 Gonzalo Marin St., 787–879–4510/4581)
Ponce 00731 (35 Mayo St., 787–841–3260)
San Juan 00921 (Condominio Med. Ctr. Plaza, Suite LC8A11, La Riviera, 787–749–4409)

National Cemetery

Puerto Rico 00961 (Ave. Cementerio Nacional 50, Barrio Hato Tejas, Bayamon, 787–798–8400)

Rhode Island

VA Medical Center

Providence 02908 (830 Chalkstone Avenue, 401–273–7100 or 866–590–2976)

Clinic

Middletown 02842 (One Corporate Place, 401–847–6239)

Regional Office

Providence 02903 (380 Westminster St.; statewide, 1–800–827–1000)

Vet Center

Warwick 02889 (2038 Warwick Ave., 401–739–0167)

South Carolina

VA Medical Centers

Charleston 29401 (109 Bee Street, 843–577–5011 or 888–878–6884)
Columbia 29209 (6439 Garners Ferry Road, 803–776–4000)

Clinics

Anderson 29621 (1702 E. Greenville Street, 864–224–5450)
Beaufort 29902 (Pickney Road, 843–770–0444)
Florence 29505 (514–H Dargan St., 843–292–8383)
Greenville 29605 (3510 Augusta Rd., 864–299–1600)
Myrtle Beach 29577 (3381 Phillis Blvd., 843–477–0177)
North Charleston 29406 (9237 University Blvd., 843–789–6400)
Orangeburg 29118 (1767 Villagepark Drive, 803–533–1335)
Rock Hill 29730 (205 Piedmont Blvd., 803–366–4848)
Sumter 29150 (407 North Salem Avenue, 803–938–9901)

Nursing Home

Walterboro 29488 (2461 Sidneys Road, Veterans Victory House, 843–538–3000)

Regional Office

Columbia 29201 (1801 Assembly St., statewide 1–800–827–1000)

Vet Centers

Columbia 29201 (1513 Pickens St., 803–765–9944)
Greenville 29601 (14 Lavinia Ave., 864–271–2711)
North Charleston 29406 (5603–A Rivers Ave., 843–747–8387)

National Cemeteries

Beaufort 29902–3947 (1601 Boundary St., 843–524–3925)
Florence 29501 (803 E. National Cemetery Rd., 843–669–8783)

South Dakota

VA Medical Centers

Fort Meade 57741 (113 Comanche Road, 605–347–2511 or 800–743–1070)
Hot Springs 57747 (500 North 5th Street, 605–745–2000 or 800–764–5370)
Sioux Falls 57117 (2501 W. 22nd St., P.O. Box 5046, 605–336–3230 or 800–316–8387)

Clinics

Aberdeen 57401 (1440 15th Avenue NW., 605–622–2640)
Eagle Butte: 57625 (15 Main Street, 605–964–8000)
Mission 57555 (153 Main Street, 605–856–2295)
Pierre 57501 (1601 North Harrison, Suite 6, 605–945–1710)
Pine Ridge (605–867–2393)
Rapid City 57701 (3525 5th Street, 605–718–1095)
Winner 57580 (1436 E. 10th St., 605–842–2443)

Regional Office

Sioux Falls 57117 (P.O. Box 5046, 2501 W. 22nd St., statewide 1–800–827–1000)

Vet Centers

Martin 57551 (East Hwy 18, 605–685–1300)
Rapid City 57701 (621 6th St., Suite 101 Kansas City St., 605–348–0077)
Sioux Falls 57104 (601 S. Cliff Ave., Suite C, 605–330–4552)

National Cemeteries

Black Hills 57785 (20901 Pleasant Valley Dr., Sturgis, 605–347–3830)
Fort Meade 57785 (P.O. Box 640, Old Stone Rd., Sturgis, 605–347–3830)
Hot Springs 57747 (500 N 5th St., 605–347–3830)

Tennessee

VA Medical Centers

Memphis 38104 (1030 Jefferson Avenue, 901–523–8990 or 800–636–8262)
Mountain Home 37684 (Corner of Lamont and Sydney Streets, P.O. Box 4000, 423–926–1171 or 877–573–3529)
Murfreesboro 37129 (3400 Lebanon Pike, 615–867–6000 or 800–876–7093)
Nashville 37212 (1310 24th Avenue South, 615–327–4751 or 800–228–4973)

Clinics

Arnold Air Force Base 37389 (225 First Street, 931–454–6134)
Chattanooga 37411 (150 Debra Rd., Suite 5200, Bldg. 6200, 423–893–6500)
Clarksville 37043 (1731 Memorial St., Suite 110, 931–221–2171
Cookeville 38501 (851 S. Willow Avenue, Suite 108, 931–284–4060)
Dover 37204 (1021 Spring Street, 931–232–5329)
Nashville 37204 (601 Benton Ave, Nashville, 615–292–9770)
Knoxville 37923 (9031 Cross Park Drive, 865–545–4592)
Savannah 38372 (765–A Florence Rd, 731–925–2300)

Regional Office

Nashville 37203 (110 9th Ave., South, statewide 1–800–827–1000)

Vet Centers

Chattanooga 37411 (951 Eastgate Loop Rd., Bldg. 5700, Suite 300, 423–855–6570)
Johnson City 37604 (1615A W. Market St., 423–928–8387)
Knoxville 37914 (2817 E. Magnolia Ave., 865–545–4680)
Memphis 38104 (1835 Union, Suite 100, 901–544–0173)
Nashville 37217 (Airpark Bus. Cen. 1, Suite A–5, 1420 Donelson Pike, 615–366–1220)

National Cemeteries

Chattanooga 37404 (1200 Bailey Ave., 423–855–6590)
Knoxville 37917 (939 Tyson St., NW., 423–855–6590)
Memphis 38122 (3568 Townes Ave., 901–386–8311)
Mountain Home 37684 (P.O. Box 8, VAMC, Bldg. 117, 423–979–3535)
Nashville 37115–4619 (1420 Gallatin Rd. S., Madison, 615–860–0086)

Texas

VA Medical Centers

Amarillo 79106 (6010 Amarillo Boulevard West 806–355–9703 or 800–687–8262)
Big Spring 79720 (300 Veterans Blvd., 432 263–7361 or 800–472–1365)
Bonham 75418 (1201 E. 9th Street, 903–583–2111 or (800) 924–8387)
Dallas 75216 (4500 South Lancaster Road, 214–742–8387 or 800–849–3597)
El Paso 79930 (5001 North Piedras Street, 915–564–6100 or 800–672–3782)
Harlingen 78550 (South Texas VA Health Care Center, 2106 Treasure Hills Blvd., 956–366–4500)
Houston 77030 (2002 Holcombe Blvd., 713–791–1414 or 800–553–2278)
Kerrville 78028 (3600 Memorial Blvd., 830–896–2020)
San Antonio 78229 (7400 Merton Minter Blvd., 210–617–5300 or 888–686–6350
Temple 76504 (1901 Veterans Memorial Drive, 254–778–4811 or 800–423–2111)
Waco 76711 (4800 Memorial Drive, 254–752–6581 or 800–423–2111)

Clinics

Abilene 79602 (4225 Woods Place, 325–695–3252)
Austin 78741 (2901 Montopolis Drive, 512–389–1010)
Beaumont 77707 (3420 Veterans Circle, 409–981–8550 or 1–800–833–7734)
Beeville 78102 (302 S. Hillside Dr., 361–358–9912)
Bridgeport 76426 (808 Woodrow Wilson Ray Cir., 940–683–2297) Brownwood 76801 (2600 Memorial Park Drive, 325–641–0568)
Cedar Park 78613 (701 Whitestone Boulevard, 512–260–1368)
Childress 79201 (1001 Hwy. 83 North, 940–937–3636)
College Station 77845 (1605 Rock Prairie Rd., Ste. 212, 979–680–0361)
Conroe 77304 (800 Riverwood Ct., Ste. 100, 936–522–4000)
Corpus Christi 78405 (5283 Old Brownsville Road, 361–806–5600)
Denton 76205 (2223 Colorado Blvd., 940–213–4100)
Fort Worth 76104 (300 W., Rosedale Street, 817–335–2202 or 800–443–9672)
Fort Worth 76107 (855 Montgomery Street, 817–735–2228)
Fort Stockton 79735 (501 N. Main, 432–336–0700)
Galveston 77551 (6115 Avenue L, 409–741–0256 or 800–310–5001)
Granbury 76049 (2006 Fall Creek Hwy., 817–326–3440)
Greenville 75407 (4311 Wesley St., 903–455–5958)
Harlingen 78550 (1629 Treasure Hills Blvd., Suite 5–B, 956–366–4500)
Laredo 78041 (6551 Star Court, 956–523–7850, refills: 1–800–209–7377)
Longview 75601 (1205 E. Marshal Ave., 903–247–8262 or 800–957–8262)
Lubbock 79412 (6104 Avenue Q South Drive, 806–472–3400)
Lufkin 75901 (1301 Frank Avenue, 936–637–1342 or 1–800–209–3120)
McAllen 78501 (2101 S. Colonel Rowe Blvd., 956–618–7100 or 866–622–5536)
New Braunfels 78130 (189 E. Austin, Suite 106, 830–629–3614)
Odessa 79762 (4241 N. Tanglewood, Suite 201, 432–550–0149)
Palestine 75801 (2000 So. Loop 256, Suite 124, 903–723–9006)
Paris 75462 (635 Stone Ave., 903–785–9900)
San Antonio 78240 (Frank M, Tejeda OPC, 5788 Eckhert Road, 210–699–2100)
San Antonio Dental Clinic 78299 (8410 Data Point, 210–949–8900)
San Angelo 76905 (2018 Pulliam, 325–658–6138)
San Antonio 78226 (1831 S. General McMullen, 210–434–1400)
San Antonio Greenway 78217 (2455 NE., Loop 410, Ste. 100, 210– 599–6000)
San Antonio Northern Hills 78217 (14100 Nacogdoches, Ste. 116, 210–653–8989)
San Antonio Pecan Valley 78222 (4243 E Southcross, Ste. 205, 210–304–3500)
Sherman 75090 (2612 N. Loy Lake, Ste. 300, 903–891–8317)
Stamford 79553 (Box 911, Hwy. 6 East, 325–773–2710)
Stratford 79084 (1220 Purnell, P.O. Box 1107, 806–396–2852)
Texas City 77591 (9300 Emmett F. Lowry Expressway, Suite 206, 409–986–1129 or 800–310–5001)
Tyler 75701 (3414 Golden Rd., 903–593–6064)
Victoria 77901 (1502 E. Airline Dr., Suite 40, 361–582–7700 or 800–209–7377)
Wichita Falls 76301 (1800 7th St., 940–723–2373)

Regional Offices

Houston 77030 (6900 Almeda Rd., statewide, 1–800–827–1000. Serves counties of Angelina, Aransas, Atacosa, Austin, Bandera, Bee, Bexar, Blanco, Brazoria, Brewster, Brooks, Caldwell, Calhoun, Cameron, Chambers, Colorado, Comal, Crockett, DeWitt, Dimitt, Duval, Edwards, Fort Bend, Frio, Galveston, Gillespie, Goliad, Gonzales, Grimes, Guadeloupe, Hardin, Harris, Hays, Hidalgo, Houston, Jackson, Jasper, Jefferson, Jim Hogg, Jim Wells, Karnes, Kendall, Kennedy, Kerr, Kimble, Kinney, Kleberg, LaSalle, Lavaca, Liberty, Live Oak, McCulloch, McMullen, Mason, Matagorda, Maverlck, Medina, Menard, Montgomery, Nacogdoches, Newton, Nueces, Orange, Pecos, Polk, Real, Refugio, Sabine, San Augustine, San Jacinto, San Patricio, Schleicher, Shelby, Starr, Sutton, Terrell, Trinity, Tyler, Uvalde, Val Verde, Victoria, Walker, Waller, Washington, Webb, Wharton, Willacy, Wilson, Zapata, Zavala)
Waco 76799 (One Veterans Plaza, 701 Clay; statewide, 1–800–827–1000; serves the rest of the state. In Bowie County, the City of

Texarkana is served by Little Rock, AR, VA Regional Office, 1–800–827–1000.)

Benefits Offices

Abilene 79602 (Taylor County Plaza Bldg., Suite 103, 400 Oak St., 1–800–827–1000)
Amarillo 79106 (6010 Amarillo Blvd. W., 1–800–827–1000)
Austin 78741 (2901 Montopolis Dr., Room 108, 1–800–827–1000)
Corpus Christi 78405 (4646 Corona Dr., Suite 150, 1–800–827–1000)
Dallas 75216 (4500 S. Lancaster Rd., 1–800–827–1000)
El Paso 79930 (5001 Piedras Dr., 1–800–827–1000)
Ft. Worth 76104–4856 (300 W. Rosedale St., 1–800–827–1000)
Lubbock 79410 (6104 Ave. Q S Drive, Rm. 132, 1–800–827–1000)
McAllen 78503 (109 Toronto Ave., 1–800–827–1000)
San Antonio 78240 (5788 Eckert Rd., 1–800–827–1000)
Temple 76504 (1901 Veterans Memorial Dr., Room 5G38 [BRB], 1–800–827–1000)
Tyler 75701 (1700 SSE Loop 323, Suite 310, 1–800–827–1000)

Vet Centers

Amarillo 79109 (3414 Olsen Blvd., Suite E., 806–354–9779)
Austin 78745 (1110 W. Will Cannon Dr., Suite 301, 512–416–1314)
Corpus Christi 78411 (4646 Corona, Suite 250, 361–854–9961)
Dallas 75231 (10501 N. Central Expressway, Suite 213, 214–361–5896)
El Paso 79925 (1155 Westmoreland, Suite 121, 915–772–0013)
Fort Worth 76104 (1305 W. Magnolia, Suite B, 817–921–9095)
Harker Heights 76548 (302 Millers Crossing, Suite #4, 254–953–7100)
Houston 77006 (2990 Richmond Ave., Suite 325, 713–523–0884)
Houston 77024 (701 N. Post Oak Rd., Suite 102, 713–682–2288)
Laredo 78041 (6020 McPherson Rd., 1A, 956–723–4680)
Lubbock 79410 (3208 34th St., 806–792–9782)
McAllen 78504 (801 Nolana, Suite 140, 956–631–2147)
Midland 79703 (3404 W. Illinois, Suite 1, 432–697–8222)
San Antonio 78212 (231 W. Cypress St., Suite 100, 210–472–4025)

National Cemeteries

Dallas-Fort Worth 75211 (2000 Mountain Creek Parkway, 214–467–3374)
Fort Bliss 79906 (Box 6342, 5200 Fred Wilson Rd., 915–564–0201)
Fort Sam Houston 78209 (1520 Harry Wurzbach Rd., San Antonio, 210–820–3891/3894)
Houston 77038 (10410 Veterans Memorial Dr., 281–447–8686)
Kerrville 78028 (VAMC, 3600 Memorial Blvd., 210–820–3891/3894)
San Antonio 78202 (517 Paso Hondo St., 210–820–3891/3894)

Utah

VA Medical Center

Salt Lake City 84148 (500 Foothill Drive, 801–582–1565 or 800–613–4012)

Clinics

Fountain Green 84632 (300 W. 300 S., 435–623–3129)
Nephi 84648 (48 W. 1500 N., 435–623–3129)
Ogden 84403 (982 Chambers Street, 801–479–4105)
Orem 84057 (740 W. 800 N., Suite 440, 801–235–0953)
Roosevelt 84066 (210 W. 300 N. (75–3), 435–725–2082)
St. George 84770 (1067 East Tabernacle, Suite 7, 435–634–7608 Ext. 6000)
Regional Office: Salt Lake City 84158 (P.O. Box 581900, 550 Foothill Dr., statewide 1–800–827–1000)

Vet Centers

Provo 84604 (1807 No. 1120 West, 801–377–1117)
Salt Lake City 84106 (1354 East 3300 South, 801–584–1294)

Vermont

VA Medical Center

White River Junction 05009 (215 North Main Street, 802–295–9363 or 866–687–8387)

Clinics

Bennington 05201 (190 North Street, 802–447–6913)
Colchester 05446 (74 Hegeman Ave., 802–655–1356)
Rutland 05702 (215 Stratton Road, 802–773–3386)

Regional Office

White River Junction 05001 (215 N. Main St., 802–296–5177 or 1–800–827–1000 from within Vermont)

Vet Centers

South Burlington 05403 (359 Dorset St., 802–862–1806)
White River Junction 05001 (222 Holiday Inn Dr., #2 Gilman Office Complex, 802–295–2908 or 1–800–649–6603)

Virginia

VA Medical Centers

Hampton 23667 (100 Emancipation Drive, 757–722–9961)
Richmond 23249 (1201 Broad Rock Boulevard, 804–675–5000 or 800–784–8381)
Salem 24153 (1970 Roanoke Boulevard, 540–982–2463 or 888–982–2463)

Clinics

Alexandria 22301 (6940 South Kings Highway Suite #208, 703–313–0694)
Danville 24540 (100 Vicar Pl., 434–836–2100)
Fredericksburg 22401 (1960 Jefferson Davis Hwy., Suite 100, 540–370–4468)
Harrisonburg 22801 (847 Cantrell Avenue, Suite 100, 540–442–1773)
Martinsville 24112 (315 Hospital Way, Ste. 101, 276–632–5929)
Stephens City 22655 (106 Hyde Court, 540–869–0600)
Saltville 23470 (308 W. Main St., 276–496–4433)
Tazewell 24651 (123 Ben Bolt Ave., 276–988–2526)
Virginia Beach 23462 (244 Clearfield Ave., 757–726–6070)

Regional Office

Roanoke 24011 (210 Franklin Rd. SW., statewide 1–800–827–1000)

Vet Centers

Alexandria 22309 (8796 Sacramento Dr., Suite D&E, 703–360–8633)
Norfolk 23517 (2200 Colonial Ave., Suite 3, 757–623–7584)
Richmond 23230 (4902 Fitzhugh Ave., 804–353–8958)
Roanoke 24016 (350 Albemarle Ave. SW., 540–342–9726)

National Cemeteries

Alexandria 22314 (1450 Wilkes St., 703–221–2183/2184)
Balls Bluff 22075 (Rte. 7, Leesburg, 540–825–0027)
City Point 23860 (10th Ave. & Davis St., Hopewell, 804–795–2031)
Cold Harbor 23111 (6038 Cold Harbor Rd., Mechanicsville, 804–795–2031)
Culpeper 22701 (305 U.S. Ave., 540–825–0027)
Danville 24541 (721 Lee St., 704–636–2661)
Fort Harrison 23231 (8620 Varina Rd., Richmond, 804–795–2031)
Glendale 23231 (8301 Willis Church Rd., Richmond, 804–795–2031)
Hampton 23667 (Cemetery Rd. at Marshall Ave., 757–723–7104)
Hampton 23667 (VAMC, Emancipation Dr., 757–723–7104)
Quantico 22172 (P.O. Box 10, 18424 Joplin Rd. (Rte. 619), 703–221–2183/2184)
Richmond 23231 (1701 Williamsburg Rd., 804–795–2031)
Seven Pines 23150 (400 E. Williamsburg Rd., Sandston, 804–795–2031)
Staunton, 24401 (901 Richmond Ave., 540–825–0027)
Winchester 22601 (401 National Ave., 540–825–0027)

Virgin Islands

Clinics

St. Croix 00850–4701 (The Village Mall, RR 2 Box 10556, 340–774–6674)
St. Thomas 00802 (Havensight Mall, Building III (Upper), Suite 304 & 310, New Quarter, 340–774–6674)

Benefits

Served by San Juan, Puerto Rico, VA Regional Office, 1–800–827–1000

Vet Centers

St. Croix 00850 (Box 12, R.R. 02, Village Mall, 113, RR2 Box 10556, Kingshill, 340–778–5553)
St. Thomas 00802 (9800 Buchaneer Mall, Suite 8, 340–774–6674)

Washington

VA Medical Centers

Seattle 98108 (1660 S. Columbian Way, 800–329–8387 or 206–762–1010)
Spokane 99205 (4815 N. Assembly Street, 509–434–7000 or 800–325–7940)

Tacoma 98493 (9600 Veterans Dr., 253–582–8440 or 800–329–8387)
Vancouver 98661 (1601 E. 4th Plain Blvd., 360–696–4061 or 800–949–1004)
Walla Walla 99362 (77 Wainwright Drive, 509–525–5200 or 888–687–8863)

Clinics

Bellevue 98005 (13033 Bel-Red Road, Suite 210, 425–214–1055)
Bremerton 98312 (925 Adele Avenue, 360–782–0129)
Federal Way 98003 (34617 11th Place South, 253–336–4142)
Richland 99352 (946 Stevens Drive, Suite C, 509–946–1020)
Seattle 98125 (12360 Lake City Way NE., Suite 200, 206–384–4382)
Wenatchee 98801 (2530 Chester-Kimm Road, 509–663–7615)
Yakima 98902 (717 Fruitvale Blvd., 509–966–0199)
Yakima Mental Health Clinic 98902 (1111 N. 1st Street, Suite 1, 509–457–2736)

Regional Office

Seattle 98174 (Fed. Bldg., 915 2nd Ave., statewide 1–800–827–1000)

Benefits Offices

Fort Lewis 98433 (Waller Hall Rm. 700, P.O. Box 331153, 253–967–7106)
Bremerton 98337 (W. Sound Pre-Separation Center, 262 Burwell St., 360–782–9900)

Vet Centers

Bellingham 98226 (3800 Byron Ave., Suite 124, 360–733–9226)
Seattle 98121 (2030 9th Ave., Suite 210, 206–553–2706)
Spokane 99206 (100 N. Mullan Rd., Suite 102, 509–444–8387)
Tacoma 98409 (4916 Center St., Suite E, 253–565–7038)
Yakima 98901 (1111 N. First St., 509–457–2736)

National Cemetery

Tahoma 98042–4868 (18600 SE. 240th St., Kent, 425–413–9614

West Virginia

VA Medical Centers

Beckley 25801 (200 Veterans Avenue, 304–255–2121 or 877–902–5142)
Clarksburg 26301 (One Medical Center Drive, 304–623–3461 or 800–733–0512)
Huntington 25704 (1540 Spring Valley Drive, 304–429–6741 or 800–827–8244)
Martinsburg 25405 (510 Butler Avenue, 304–263–0811 or 800–817–3807)

Clinics

Charleston 25304 (104 Alex Ln., 304–926–6001)
Franklin 26807 (314 Pine Street, 304–358–2355)
Logan 25601 (513 Dingess St., 304–752–8355
Parkersburg 260101 (2311 Ohio Avenue, Suite A, 304–422–5114)
Parsons 26287 (206 Spruce Street, 304–478–2219)
Petersburg 26847 (Grant Memorial Hospital, P. O. Box 1019, 304–257–5817)
Sutton 26602 (93 Skidmore Lane, 304–765–3480)
Williamson 25661 (75 W 4th Ave, 304–235–2187)

Regional Office

Huntington 25701 (640 Fourth Ave., statewide 1–800–827–1000; counties of Brooke, Hancock, Marshall, Ohio, served by Pittsburgh, Pa., VA Regional Office)

Vet Centers

Beckley 25801 (101 Ellison Ave., 304–252–8220)
Charleston 25302 (521 Central Ave., 304–343–3825)
Huntington 25701 (3135 16th St. Rd., Suite 11, 304–523–8387)
Martinsburg 25401 (900 Winchester Ave., 304–263–6776)
Morgantown 26508 (1083 Greenbag Rd., 304–291–4303)
Princeton 24740 (905 Mercer St., 304–425–5653)
Wheeling 26003 (1206 Chapline St., 304–232–0587)

National Cemeteries

Grafton 26354 (431 Walnut St., 304–265–2044)
West Virginia 26354 (Rt. 2, Box 127, Grafton, 304–265–2044)

Wisconsin

VA Medical Centers

Madison 53705 (2500 Overlook Terrace, 608–256–1901)
Milwaukee 53295 (5000 West National Avenue, 888–469–6614 or 414–384–2000)
Tomah 54660 (500 E. Veterans Street, 608–372–3971 or 800–872–8662)

Clinics

Appleton 54914 (10 Tri-Park Way, 920–831–0070)
Baraboo 53913 (626 14th Street, 608–356–9318)
Beaver Dam 53916 (215 Corporate Drive, 920–356–9415)
Chippewa Falls 54729 (2501 & 2503 County Hwy I, 715–720–3780)
Cleveland 53015 (1205 North Avenue, 920–693–5600)
Green Bay 54303 (141 Siegler Street, 920–497–3126)
Hayward 54843 (15748 County Road B, 715–934–5454)
Janesville 53545 (111 N. Main Street, 608–758–9300)
Kenosha 53140 (800 55th Street, 262–653–9286)
La Crosse 54601 (2600 State Road, Phone: 608–784–3886)
Loyal 54446 (141 N. Main Street, 715–255–9799)
Rhinelander 54501 (639 West Kemp Street, 715–362–4080)
Rice Lake 54843 (2700A College Drive, 715–236–3355)
Superior 54880 (3520 Tower Avenue, 715–392–9711) Union Grove 53182 (21425 Spring Street, 262–878–7000)
Wausau 54401 (515 South 32nd Avenue, 715–842–2834)
Wisconsin Rapids 54494 (710 East Grand Ave., PO Box 26, 715–424–3844)

Regional Office

Milwaukee 53214 (5400 W. National Ave., statewide 1–800–827–1000)

Vet Centers

Madison 53703 (706 Williamson St., 608–264–5342)
Milwaukee 53218 (5401 N. 76th St., 414–536–1301)

National Cemetery

Wood 53295–4000 (5000 W. National Ave., Bldg. 1301, Milwaukee, 414–382–5300)

Wyoming

VA Medical Centers

Cheyenne 82001 (2360 E. Pershing Blvd., 307–778–7550 or 888–483–9127)
Sheridan (1898 Fort Road, 307–672–3473 or 866–822–6714)

Clinics

Casper 82601 (4140 S. Poplar St., 307–235–4143 or 1–866–338–5168)
Gillette 82718 (1701 Phillips Circle, 307–685–0676 or 1–866–612–1887)
Newcastle 57555 (1124 Washington Blvd., 605–745–2000 ext. 2474)
Powell 82435 (777 Avenue H, 307–754–7257 or 1–888–284–9308)
Riverton 82501 (2300 Rose Lane, 307–857–1211 or 1–866–338–2609)
Rock Springs 82901 (3000 College Drive, Suite C, 307–362–6641 or 866–381–2830)

Benefits Office

Cheyenne 82001 (2360 E. Pershing Blvd., statewide 1–800–827–1000)

Vet Centers

Casper 82601 (1030 North Poplar, Suite B, 307–261–5355)
Cheyenne 82001 (3219 East Pershing Blvd., 307–778–7370

[FR Doc. 2012–17507 Filed 7–18–12; 8:45 am]

BILLING CODE 8320–01–P

FEDERAL REGISTER

Vol. 77 Thursday,

No. 139 July 19, 2012

Part IV

The President

Notice of July 18, 2012—Continuation of the National Emergency With Respect to Significant Transnational Criminal Organizations

Federal Register
Vol. 77, No. 139
Thursday, July 19, 2012

Presidential Documents

Title 3—

The President

Notice of July 18, 2012

Continuation of the National Emergency With Respect To Significant Transnational Criminal Organizations

On July 24, 2011, by Executive Order 13581, I declared a national emergency pursuant to the International Emergency Economic Powers Act (50 U.S.C. 1701–1706) to deal with the unusual and extraordinary threat to the national security, foreign policy, and economy of the United States constituted by the activities of significant transnational criminal organizations.

The activities of significant transnational criminal organizations have reached such scope and gravity that they threaten the stability of international political and economic systems. Such organizations are becoming increasingly sophisticated and dangerous to the United States. They are increasingly entrenched in the operations of foreign governments and the international financial system, thereby weakening democratic institutions, degrading the rule of law, and undermining economic markets. These organizations facilitate and aggravate violent civil conflicts and increasingly facilitate the activities of other dangerous persons.

Because the activities of significant transnational criminal organizations continue to pose an unusual and extraordinary threat to the national security, foreign policy, and economy of the United States, the national emergency declared in Executive Order 13581 of July 24, 2011, and the measures adopted on that date to deal with that emergency, must continue in effect beyond July 24, 2012. Therefore, in accordance with section 202(d) of the National Emergencies Act (50 U.S.C. 1622(d)), I am continuing for 1 year the national emergency declared in Executive Order 13581.

This notice shall be published in the **Federal Register** and transmitted to the Congress.

THE WHITE HOUSE,
July 18, 2012

[FR Doc. 2012–17863
Filed 7–18–12; 2:15 pm]
Billing code 3295–F2–P

Reader Aids

Federal Register

Vol. 77, No. 139

Thursday, July 19, 2012

CUSTOMER SERVICE AND INFORMATION

Federal Register/Code of Federal Regulations	
General Information, indexes and other finding aids	**202–741–6000**
Laws	**741–6000**
Presidential Documents	
Executive orders and proclamations	**741–6000**
The United States Government Manual	**741–6000**
Other Services	
Electronic and on-line services (voice)	**741–6020**
Privacy Act Compilation	**741–6064**
Public Laws Update Service (numbers, dates, etc.)	**741–6043**
TTY for the deaf-and-hard-of-hearing	**741–6086**

ELECTRONIC RESEARCH

World Wide Web

Full text of the daily Federal Register, CFR and other publications is located at: **www.fdsys.gov.**

Federal Register information and research tools, including Public Inspection List, indexes, and links to GPO Access are located at: **www.ofr.gov.**

E-mail

FEDREGTOC-L (Federal Register Table of Contents LISTSERV) is an open e-mail service that provides subscribers with a digital form of the Federal Register Table of Contents. The digital form of the Federal Register Table of Contents includes HTML and PDF links to the full text of each document.

To join or leave, go to **http://listserv.access.gpo.gov** and select *Online mailing list archives, FEDREGTOC-L, Join or leave the list (or change settings);* then follow the instructions.

PENS (Public Law Electronic Notification Service) is an e-mail service that notifies subscribers of recently enacted laws.

To subscribe, go to **http://listserv.gsa.gov/archives/publaws-l.html** and select *Join or leave the list (or change settings);* then follow the instructions.

FEDREGTOC-L and **PENS** are mailing lists only. We cannot respond to specific inquiries.

Reference questions. Send questions and comments about the Federal Register system to: **fedreg.info@nara.gov**

The Federal Register staff cannot interpret specific documents or regulations.

Reminders. Effective January 1, 2009, the Reminders, including Rules Going Into Effect and Comments Due Next Week, no longer appear in the Reader Aids section of the Federal Register. This information can be found online at **http://www.regulations.gov.**

CFR Checklist. Effective January 1, 2009, the CFR Checklist no longer appears in the Federal Register. This information can be found online at **http://bookstore.gpo.gov/.**

FEDERAL REGISTER PAGES AND DATE, JULY

39143–39384 2
39385–39616 3
39617–39894 5
39895–40248 6
40249–40458 9
40459–40778 10
40779–41040 11
41041–41242 12
41243–41662 13
41663–41884 16
41885–42174 17
42175–42416 18
42417–42620 19

CFR PARTS AFFECTED DURING JULY

At the end of each month the Office of the Federal Register publishes separately a List of CFR Sections Affected (LSA), which lists parts and sections affected by documents published since the revision date of each title.

3 CFR

Proclamations:
8840 39885
Executive Orders:
12382 (amended by 13618) 40779
12472 (revoked by 13618) 40779
13618 40779
13619 41243
Administrative Orders:
Notices:
Notice of July 17, 2012 42415
Notice of July 18, 2012 42619
Presidential Determinations:
No. 2012–10 of June 25, 2012 39615

5 CFR

532 41247
890 42417
2634 39143

7 CFR

2 40249
520 40249
759 41248
762 41248
915 39150
930 40250
1485 41885
1902 41256
1945 41248
1980 40785
3560 40253
Proposed Rules:
51 41707
457 41709
925 39184
1220 40529

9 CFR

417 39895
Proposed Rules:
1 41716
2 41716
107 42195

10 CFR

Ch. I 39899
2 39385
171 39385
1703 41258
Proposed Rules:
2 39442
20 41107
30 41107
40 41107
50 41107
61 40817
70 41107
72 41107
171 39442
430 40530

12 CFR

404 41885
614 39387
1005 40459
1070 39617
Proposed Rules:
1254 41107

13 CFR

115 41663
Proposed Rules:
121 ..... 42197, 42211, 42441

14 CFR

1 ..... 39388, 40478
25 40255
33 39623
39 ..... 39153, 39156, 39157, 39159, 39624, 40479, 40481, 40485, 41041, 41045, 41886, 41889, 41891, 41895, 41897, 42419, 42421, 42424
67 39389
71 ..... 40488, 40489, 40490, 40492, 41259, 42425, 42427, 42428, 42430
93 39911
97 ..... 41666, 41668
117 40790
129 40493
Proposed Rules:
Ch. 1 40310
25 41930
39 ..... 39186, 39188, 39444, 39446, 40307, 40820, 40822, 40823, 40826, 40830, 40832, 41931, 41934, 41937, 42225, 42454, 42455, 42457, 42459
71 ..... 39651, 39652, 39653, 40834, 41108, 41939, 42228
120 39194
121 39654
382 39800

15 CFR

734 39354
738 39354
740 ..... 39354, 40493
742 ..... 39354, 40493
743 39354
744 39354
746 39354
748 ..... 39354, 40258, 40493
750 40493
752 ..... 39354, 40493
760 40493
770 39354

772.....39354, 41670
774 .....39162, 39354, 41670

16 CFR

Proposed Rules:
23.....39201

17 CFR

Ch. I.....41260
1.....39626
39.....42560
229.....39380, 42175
240 .....39380, 39626, 41602, 41671
249.....41602, 42176
Proposed Rules:
Ch. I.....41110, 41214
23.....41109
39.....41940

18 CFR

35.....41482
Proposed Rules:
35.....39447, 40414
37.....40414
40.....39858
101.....40414

19 CFR

12.....41266
Proposed Rules:
201.....41120
210.....41120
351.....40534, 41952

21 CFR

74.....39921
177.....41899
522.....39380
556.....39380
870.....39924
Proposed Rules:
16.....40736
172.....42229
175.....41953
801.....40736
803.....40736
806.....40736
810.....40736
814.....40736
820.....40736
821.....40736
822.....40736
830.....40736
890.....39953

22 CFR

126.....39392
232.....40790

24 CFR

Proposed Rules:
232.....40310
Ch. IX.....39452

26 CFR

1.....41048, 41270
602.....41048, 41270
Proposed Rules:
1 .....39452, 39655, 42462
301.....42462

28 CFR

Proposed Rules:
16.....40539

29 CFR

1983.....40494
2550.....41678
4022.....41270
Proposed Rules:
1952.....42462
2550.....41716

30 CFR

914.....41680
948.....40793
950.....40796
Proposed Rules:
938.....40836
1206.....42230

31 CFR

Proposed Rules:
Ch. X.....41334

32 CFR

239.....39627
706.....39629
2003.....40261
Proposed Rules:
199.....39655

33 CFR

100 .....39393, 39395, 39398, 39630, 39632, 39633, 41902
117 .....40265, 40266, 40509, 41685, 42432, 42433
147.....39164
165 .....39169, 39170, 39172, 39174, 39398, 39402, 39404, 39406, 39408, 39411, 39413, 39413, 39418, 39420, 39422, 39633, 39638, 40266, 40509, 40511, 40513, 40515, 40518, 40521, 40798, 40800, 41048, 41271, 41686, 41688, 41902, 41909, 41911, 41914, 42176, 42179
401.....40802
Proposed Rules:
100 .....39453, 42464, 42465, 42467
165 .....39453, 40541, 40544, 41717

34 CFR

690.....40805
Proposed Rules:
674.....42086
682.....42086
685.....42086

36 CFR

4.....39927
294.....39576
Proposed Rules:
7.....40547
1195.....39656

37 CFR

1.....42150
41.....42150
202.....40268

38 CFR

0.....41273
3.....40524, 40525
Proposed Rules:
64.....42230

39 CFR

111.....40527
Proposed Rules:
501.....41336
3050.....41336

40 CFR

Ch. I.....42181
9.....41692
52 .....39177, 39180, 39181, 39425, 39938, 39943, 40150, 41051, 41276, 41278, 41279, 41697, 41914, 41916
63.....41075
131.....39949
141.....39182
142.....39182
171.....39640
180 .....40271, 40806, 40812, 41081, 41284, 42433
271.....41292
272.....41292
370.....41300
721.....41692
Proposed Rules:
50.....39205, 39959
51.....39205, 39959
52 .....39205, 39456, 39458, 39657, 39659, 40315, 40317, 40550, 41132, 41337, 41343, 41954, 42470
53.....39205
58.....39205
60.....42368
63.....41146, 42368
81.....41132
180.....39962, 41346
261.....41720
271.....41348
272.....41348
300.....40318

41 CFR

128–1.....41316

42 CFR

Proposed Rules:
409.....41548
413.....40952
417.....40952
424.....41548
431.....41548
484.....41548
488.....41548
489.....41548
498.....41548

44 CFR

64.....39642, 41320
67.....41323

47 CFR

2.....41919
10.....41331
20.....41919
54.....39435, 42185
64.....42187
73.....39439, 40276
76.....40276
Proposed Rules:
15.....39206
64.....41955
301.....41956

48 CFR

1002.....40302
1032.....40302
1052.....40302
Proposed Rules:
15.....40552

49 CFR

375.....41699
Proposed Rules:
171.....39662
173.....39662
178.....39662
571.....39206, 40843

50 CFR

17.....41088
600.....42189
622.....39647, 42192
635.....39648
648.....40527, 41704
679 .....39183, 39440, 39441, 39649, 40305, 40816, 41332, 42193, 42439
Proposed Rules:
17 .....39666, 39670, 39965, 40172, 40222, 40706, 41147, 42238
20.....39983
32.....41002
Ch. II.....41728
Ch. III.....41728
300.....40553
Ch. IV.....41728
Ch. V.....41728
Ch. VI.....41728
600.....39459
622 .....39460, 40561, 42251, 42476

LIST OF PUBLIC LAWS

This is a continuing list of public bills from the current session of Congress which have become Federal laws. It may be used in conjunction with ''P L U S'' (Public Laws Update Service) on 202–741–6043. This list is also available online at *http://www.archives.gov/federal-register/laws*.

The text of laws is not published in the **Federal Register** but may be ordered in ''slip law'' (individual pamphlet) form from the Superintendent of Documents, U.S. Government Printing Office, Washington, DC 20402 (phone, 202–512–1808). The text will also be made available on the Internet from GPO's Federal Digital System (FDsys) at *http://www.gpo.gov/fdsys*. Some laws may not yet be available.

H.R. 33/P.L. 112–142
Church Plan Investment Clarification Act (July 9, 2012; 126 Stat. 989)

H.R. 2297/P.L. 112–143
To promote the development of the Southwest waterfront in the District of Columbia, and for other purposes. (July 9, 2012; 126 Stat. 990)

S. 3187/P.L. 112–144
Food and Drug Administration Safety and Innovation Act (July 9, 2012; 126 Stat. 993)

Last List July 10, 2012

Public Laws Electronic Notification Service (PENS)

PENS is a free electronic mail notification service of newly enacted public laws. To subscribe, go to *http://listserv.gsa.gov/archives/publaws-l.html*

Note: This service is strictly for E-mail notification of new laws. The text of laws is not available through this service. **PENS** cannot respond to specific inquiries sent to this address.