AUTHENTICATED
U.S. GOVERNMENT
INFORMATION
GPO

FEDERAL REGISTER

Vol. 77 Thursday,
No. 144 July 26, 2012

Pages 43709–44106

OFFICE OF THE FEDERAL REGISTER

The **FEDERAL REGISTER** (ISSN 0097–6326) is published daily, Monday through Friday, except official holidays, by the Office of the Federal Register, National Archives and Records Administration, Washington, DC 20408, under the Federal Register Act (44 U.S.C. Ch. 15) and the regulations of the Administrative Committee of the Federal Register (1 CFR Ch. I). The Superintendent of Documents, U.S. Government Printing Office, Washington, DC 20402 is the exclusive distributor of the official edition. Periodicals postage is paid at Washington, DC.

The **FEDERAL REGISTER** provides a uniform system for making available to the public regulations and legal notices issued by Federal agencies. These include Presidential proclamations and Executive Orders, Federal agency documents having general applicability and legal effect, documents required to be published by act of Congress, and other Federal agency documents of public interest.

Documents are on file for public inspection in the Office of the Federal Register the day before they are published, unless the issuing agency requests earlier filing. For a list of documents currently on file for public inspection, see *www.ofr.gov.*

The seal of the National Archives and Records Administration authenticates the Federal Register as the official serial publication established under the Federal Register Act. Under 44 U.S.C. 1507, the contents of the **Federal Register** shall be judicially noticed.

The **Federal Register** is published in paper and on 24x microfiche. It is also available online at no charge at *www.fdsys.gov*, a service of the U.S. Government Printing Office.

The online edition of the **Federal Register** is issued under the authority of the Administrative Committee of the Federal Register as the official legal equivalent of the paper and microfiche editions (44 U.S.C. 4101 and 1 CFR 5.10). It is updated by 6:00 a.m. each day the **Federal Register** is published and includes both text and graphics from Volume 59, 1 (January 2, 1994) forward. For more information, contact the GPO Customer Contact Center, U.S. Government Printing Office. Phone 202-512-1800 or 866-512-1800 (toll free). E-mail, *gpo@custhelp.com.*

The annual subscription price for the **Federal Register** paper edition is $749 plus postage, or $808, plus postage, for a combined **Federal Register, Federal Register** Index and List of CFR Sections Affected (LSA) subscription; the microfiche edition of the **Federal Register** including the **Federal Register** Index and LSA is $165, plus postage. Six month subscriptions are available for one-half the annual rate. The prevailing postal rates will be applied to orders according to the delivery method requested. The price of a single copy of the daily **Federal Register,** including postage, is based on the number of pages: $11 for an issue containing less than 200 pages; $22 for an issue containing 200 to 400 pages; and $33 for an issue containing more than 400 pages. Single issues of the microfiche edition may be purchased for $3 per copy, including postage. Remit check or money order, made payable to the Superintendent of Documents, or charge to your GPO Deposit Account, VISA, MasterCard, American Express, or Discover. Mail to: U.S. Government Printing Office—New Orders, P.O. Box 979050, St. Louis, MO 63197-9000; or call toll free 1-866-512-1800, DC area 202-512-1800; or go to the U.S. Government Online Bookstore site, see *bookstore.gpo.gov.*

There are no restrictions on the republication of material appearing in the **Federal Register.**

How To Cite This Publication: Use the volume number and the page number. Example: 77 FR 12345.

Postmaster: Send address changes to the Superintendent of Documents, Federal Register, U.S. Government Printing Office, Washington, DC 20402, along with the entire mailing label from the last issue received.

SUBSCRIPTIONS AND COPIES

PUBLIC

Subscriptions:

Paper or fiche	**202–512–1800**
Assistance with public subscriptions	**202–512–1806**

General online information **202–512–1530; 1–888–293–6498**

Single copies/back copies:

Paper or fiche	**202–512–1800**
Assistance with public single copies	**1–866–512–1800 (Toll-Free)**

FEDERAL AGENCIES

Subscriptions:

Paper or fiche	**202–741–6005**
Assistance with Federal agency subscriptions	**202–741–6005**

FEDERAL REGISTER WORKSHOP

THE FEDERAL REGISTER: WHAT IT IS AND HOW TO USE IT

FOR: Any person who uses the Federal Register and Code of Federal Regulations.

WHO: Sponsored by the Office of the Federal Register.

WHAT: Free public briefings (approximately 3 hours) to present:

1. The regulatory process, with a focus on the Federal Register system and the public's role in the development of regulations.
2. The relationship between the Federal Register and Code of Federal Regulations.
3. The important elements of typical Federal Register documents.
4. An introduction to the finding aids of the FR/CFR system.

WHY: To provide the public with access to information necessary to research Federal agency regulations which directly affect them. There will be no discussion of specific agency regulations.

WHEN: Tuesday, September 11, 2012
9 a.m.–12:30 p.m.

WHERE: Office of the Federal Register
Conference Room, Suite 700
800 North Capitol Street, NW.
Washington, DC 20002

RESERVATIONS: (202) 741–6008

Printed on recycled paper.

Contents

Federal Register

Vol. 77, No. 144

Thursday, July 26, 2012

Agricultural Marketing Service
RULES
Tomatoes Grown in Florida:
Increased Assessment Rate, 43709–43711

Agriculture Department
See Agricultural Marketing Service
See Animal and Plant Health Inspection Service
See Forest Service
See Rural Utilities Service

Air Force Department
NOTICES
Privacy Act; Systems of Records, 43815–43817

Animal and Plant Health Inspection Service
NOTICES
Records of Decisions:
Gull Hazard Reduction Program at John F. Kennedy International Airport, 43805

Bonneville Power Administration
NOTICES
Memorandums of Agreements with Kalispel Tribe:
Columbia Basin Fish Accords, 43819–43820

Centers for Disease Control and Prevention
NOTICES
Agency Information Collection Activities; Proposals, Submissions, and Approvals, 43828–43831
Statement of Organization, Functions and Delegation of Authority, 43831–43841

Civil Rights Commission
NOTICES
Meetings; Sunshine Act, 43806

Coast Guard
PROPOSED RULES
MARPOL Annex I Amendments:
Extension of Comment Period, 43741–43742

Commerce Department
See Foreig-Trade Zones Board
See Industry and Security Bureau
See International Trade Administration
See National Oceanic and Atmospheric Administration
See Patent and Trademark Office

Commodity Futures Trading Commission
PROPOSED RULES
Account Ownership and Control Report:
Withdrawal, 43968
Ownership and Control Reports, 43968–44043

Consumer Product Safety Commission
NOTICES
Agency Information Collection Activities; Proposals, Submissions, and Approvals:
Safety Standards for Full-Size Baby Cribs and Non-Full-Size Baby Cribs; Compliance Form, 43811–43812

Corporation for National and Community Service
NOTICES
Agency Information Collection Activities; Proposals, Submissions, and Approvals, 43812–43814

Defense Department
See Air Force Department
RULES
Federal Acquisition Regulations:
Federal Acquisition Circular 2005–60; Introduction, 44046–44047
Reporting Executive Compensation and First-Tier Subcontract Awards, 44047–44059
Payments under Time-and-Materials and Labor-Hour Contracts, 44059–44062
Extension of Sunset Date for Protests of Task and Delivery Orders, 44062–44063
DARPA–New Mexico Tax Agreement, 44063–44064
Clarification of Standards for Computer Generation of Forms, 44064–44065
Technical Amendments, 44065–44066
Federal Acquisition Circular 2005–60; Small Entity Compliance Guide, 44066–44067
PROPOSED RULES
Federal Acquisition Regulations:
Changes to Time-and-Materials and Labor-Hour Contracts and Orders, 43780–43782
NOTICES
Agency Information Collection Activities; Proposals, Submissions, and Approvals, 43814
Privacy Act; Systems of Records, 43814–43815

Drug Enforcement Administration
NOTICES
Decisions and Orders:
Grider Drug No. 1 and Grider Drug No. 2, 44070–44105
Importers of Controlled Substances; Applications:
Akorn, Inc., 43861
Boehringer Ingelheim Chemicals, 43861–43862
Cody Laboratories Inc., 43861
Importers of Controlled Substances; Registrations:
Alltech Associates, Inc., 43862
Noramco, Inc., 43862
Manufacturers of Controlled Substances; Applications:
Boehringer Ingelheim Chemicals, Inc., 43863
Cambrex Charles City, Inc., 43863
Nektar Therapeutics, 43862–43863
Manufacturers of Controlled Substances; Registrations:
Cambrex Charles City, Inc., 43863
Rhodes Technologies, 43864

Education Department
NOTICES
Agency Information Collection Activities; Proposals, Submissions, and Approvals:
Talent Search Annual Performance Report, 43817–43818
Applications for New Awards:
State-Tribal Education Partnership Pilot Grant Competition, 43818–43819
Meetings:
Equity and Excellence Commission, 43819

Energy Department
See Bonneville Power Administration
See Federal Energy Regulatory Commission

Environmental Protection Agency
NOTICES
Agency Information Collection Activities; Proposals, Submissions, and Approvals:
Valuing Improved Water Quality in the Chesapeake Bay Using Stated Preference Methods, 43822–43823

Federal Aviation Administration
PROPOSED RULES
Airworthiness Directives:
Eurocopter Deutschland GmbH Helicopters, 43736–43738
Eurocopter France Helicopters, 43734–43735, 43738–43740

Federal Communications Commission
PROPOSED RULES
Wireline Competition Bureau:
Rural Health Care Reform Proceedings, 43773–43780

Federal Election Commission
NOTICES
Filing Dates for Michigan Special Election in 11th Congressional District, 43823–43824
Meetings; Sunshine Act, 43824

Federal Energy Regulatory Commission
RULES
Standards for Business Practices of Interstate Natural Gas Pipelines, 43711–43721
NOTICES
Combined Filings, 43820–43821
Records Governing Off-the-Record Communications, 43821–43822

Federal Motor Carrier Safety Administration
NOTICES
Qualification of Drivers; Exemption Applications; Diabetes Mellitus, 43901–43902

Federal Railroad Administration
NOTICES
Environmental Impact Statements; Availability, etc.:
California High-Speed Train Project Fresno to Bakersfield Section, 43902–43903

Federal Reserve System
NOTICES
Changes in Bank Control:
Acquisitions of Shares of Bank or Bank Holding Company, 43824
Formations of, Acquisitions by, and Mergers of Bank Holding Companies, 43824–43825

Federal Transit Administration
NOTICES
Environmental Impact Statements; Availability, etc.:
Transit Improvements to North Red and Purple Lines, Cook County, IL, 43903

Fish and Wildlife Service
PROPOSED RULES
Endangered and Threatened Wildlife and Plants:
90-Day Finding on Petition to List Gila Mayfly as Endangered, 43799–43803
Designation of Critical Habitat for Lost River Sucker and Shortnose Sucker, 43796–43799
Endangered Status for Diamond Darter and Designation of Critical Habitat, 43906–43939

Food and Drug Administration
NOTICES
Agency Information Collection Activities; Proposals, Submissions, and Approvals:
Financial Disclosure by Clinical Investigators, 43843–43844
Generic Drug User Fee Cover Sheet, 43844–43846
Guidance for Industry on Questions and Answers Regarding Labeling of Nonprescription Human Drug Products, etc., 43841–43842
Irradiation in Production, Processing, and Handling of Food, 43842–43843
Workshops:
Food and Drug Administration Pediatric Medical Devices, 43846

Foreign Assets Control Office
NOTICES
Agency Information Collection Activities; Proposals, Submissions, and Approvals:
Reporting, Procedures and Penalties Regulations, 43903–43904

Foreign-Trade Zones Board
NOTICES
Applications for Reorganization under Alternative Site Framework:
Foreign-Trade Zone 26, Atlanta, GA, 43806

Forest Service
NOTICES
Meetings:
Southwest Idaho Resource Advisory Committee, 43805

General Services Administration
RULES
RULES
Federal Acquisition Regulations:
Federal Acquisition Circular 2005–60; Introduction, 44046–44047
Reporting Executive Compensation and First-Tier Subcontract Awards, 44047–44059
Payments under Time-and-Materials and Labor-Hour Contracts, 44059–44062
Extension of Sunset Date for Protests of Task and Delivery Orders, 44062–44063
DARPA–New Mexico Tax Agreement, 44063–44064
Clarification of Standards for Computer Generation of Forms, 44064–44065
Technical Amendments, 44065–44066
Federal Acquisition Circular 2005–60; Small Entity Compliance Guide, 44066–44067
PROPOSED RULES
Federal Acquisition Regulations:
Changes to Time-and-Materials and Labor-Hour Contracts and Orders, 43780–43782
NOTICES
Freedom of Information Act Requests:
Real Property Lease Documents from GSA Leases with Private Sector Landlords, 43825–43826

Geological Survey
NOTICES
Agency Information Collection Activities; Proposals, Submissions, and Approvals:
Mineral Resources Program's Mineral Resource External Research Program, 43856–43857

Health and Human Services Department
See Centers for Disease Control and Prevention
See Food and Drug Administration
See Indian Health Service
See National Institutes of Health
NOTICES
Agency Information Collection Activities; Proposals, Submissions, and Approvals, 43826–43827
International Workshops:
Alternative Methods for Leptospira Vaccine Potency Testing, State of Science and the Way Forward, 43827–43828

Homeland Security Department
See Coast Guard
See U.S. Customs and Border Protection

Housing and Urban Development Department
NOTICES
Rental Assistance Demonstration; Final Program Notice, 43850–43855

Indian Health Service
See Indian Health Service
NOTICES
Draft Policy on Conferring with Urban Indian Organizations, 43846–43849

Industry and Security Bureau
RULES
The Commerce Control List; CFR Correction, 43711

Interior Department
See Fish and Wildlife Service
See Geological Survey
PROPOSED RULES
Acquisition Regulations:
Buy Indian Act; Procedures for Contracting, 43782–43796
NOTICES
Meetings:
Secretarial Commission on Indian Trust Administration and Reform, 43855–43856

International Trade Administration
NOTICES
Antidumping Duty Administrative Reviews; Results, Extensions, Amendments, etc.:
Seamless Carbon and Alloy Steel Standard, Line, and Pressure Pipe from People's Republic of China, 43806–43807
Call for Nominations; Extended Deadline:
Renewable Energy and Energy Efficiency Advisory Committee, 43807

International Trade Commission
NOTICES
Investigations:
Xanthan Gum from Austria and China, 43857–43858
Terminations of Investigations:
Certain Mobile Telephones And Wireless Communication Devices Featuring Digital Cameras, And Components Thereof, 43858–43859

Justice Department
See Drug Enforcement Administration
See National Institute of Corrections
NOTICES
Lodging of Consent Decrees Under CERCLA, 43859
Lodgings of Consent Decrees:
Clean Air Act, 43859–43860
Clean Water Act, 43860–43861

Labor Department
See Mine Safety and Health Administration

Marine Mammal Commission
NOTICES
Meetings; Sunshine Act, 43865–43866

Mine Safety and Health Administration
RULES
Examinations of Work Areas in Underground Coal Mines for Violations of Mandatory Health or Safety Standards, 43721

National Aeronautics and Space Administration
RULES
Federal Acquisition Regulations:
Federal Acquisition Circular 2005–60; Introduction, 44046–44047
Reporting Executive Compensation and First-Tier Subcontract Awards, 44047–44059
Payments under Time-and-Materials and Labor-Hour Contracts, 44059–44062
Extension of Sunset Date for Protests of Task and Delivery Orders, 44062–44063
DARPA–New Mexico Tax Agreement, 44063–44064
Clarification of Standards for Computer Generation of Forms, 44064–44065
Technical Amendments, 44065–44066
Federal Acquisition Circular 2005–60; Small Entity Compliance Guide, 44066–44067
PROPOSED RULES
Federal Acquisition Regulations:
Changes to Time-and-Materials and Labor-Hour Contracts and Orders, 43780–43782
NOTICES
Intents to Grant Exclusive Licenses, 43866
Intents to Grant Partially Exclusive Licenses, 43866–43867

National Institute of Corrections
NOTICES
Solicitations for Cooperative Agreements:
Development of a 21st Century Corrections Learning Professional Competency Model, 43864–43865

National Institutes of Health
NOTICES
Meetings:
National Institute of Environmental Health Sciences, 43849
National Institute of Mental Health, 43849
National Institute on Minority Health and Health Disparities, 43850

National Oceanic and Atmospheric Administration
RULES
Expansion of Fagatele Bay National Marine Sanctuary, Regulatory Changes, and Sanctuary Name Change, 43942–43966

Western Pacific Pelagic Fisheries:
Swordfish Trip Limits in the Hawaii Deep-set Longline Fishery; Revised, 43721–43722
PROPOSED RULES
Confidentiality of Information; Magnuson-Stevens Fishery Conservation and Management Reauthorization Act; Correction, 43803–43804
NOTICES
Advisory Committee and Species Working Group Technical Advisor Appointment, 43808
Environmental Impact Statements; Availability, etc.:
Supplement to Draft Programmatic Restoration Plan, 43808–43809
Magnuson Stevens Act Provisions; General Provisions for Domestic Fisheries:
Application for Exempted Fishing Permits, 43809–43810
Meetings:
Advisory Committee to U.S. Section of International Commission for Conservation of Atlantic Tunas, 43810–43811
Pacific Fishery Management Council, 43810

Patent and Trademark Office
PROPOSED RULES
Changes to Implement First Inventor to File Provisions of Leahy–Smith America Invents Act, 43742–43759
Examination Guidelines for Implementing First-Inventor-to-File Provisions of Leahy–Smith America Invents Act, 43759–43773

Postal Regulatory Commission
NOTICES
Negotiated Service Agreement Amendment, 43867–43868

Postal Service
NOTICES
Product Change; First-Class Package Service Negotiated Service Agreement, 43868

Rural Utilities Service
PROPOSED RULES
Energy Efficiency and Conservation Loan Program, 43723–43734

Securities and Exchange Commission
NOTICES
Applications:
Credit Suisse Asset Management, LLC, et al., 43868–43873
P.E. Partners III, LLC, et al., 43873–43878
Extensions of Temporary Conditional Exemptions:
Effectiveness of Definition of Eligible Contract Participant, 43878–43879
Self-Regulatory Organizations; Proposed Rule Changes:
BATS Exchange, Inc., 43892–43897
BATS Y-Exchange, Inc., 43887–43892
Chicago Board Options Exchange, Inc., 43879–43883, 43897–43899
Financial Industry Regulatory Authority, Inc., 43885–43887
NASDAQ OMX BX, Inc., 43883–43885
NYSE Arca, Inc., 43879

State Department
NOTICES
Agency Information Collection Activities; Proposals, Submissions, and Approvals:
Humphrey Evaluation Survey, 43899–43900

Transportation Department
See Federal Aviation Administration
See Federal Motor Carrier Safety Administration
See Federal Railroad Administration
See Federal Transit Administration
NOTICES
Senior Executive Service Performance Review Boards Membership, 43900–43901

Treasury Department
See Foreign Assets Control Office
PROPOSED RULES
Changes to In-Bond Process; Correction, 43740–43741

U.S. Customs and Border Protection
PROPOSED RULES
Changes to In-Bond Process; Correction, 43740–43741

Separate Parts In This Issue

Part II
Interior Department, Fish and Wildlife Service, 43906–43939

Part III
Commerce Department, National Oceanic and Atmospheric Administration, 43942–43966

Part IV
Commodity Futures Trading Commission, 43968–44043

Part V
Defense Department, 44046–44067
General Services Administration, 44046–44067
National Aeronautics and Space Administration, 44046–44067

Part VI
Justice Department, Drug Enforcement Administration, 44070–44105

Reader Aids

Consult the Reader Aids section at the end of this page for phone numbers, online resources, finding aids, reminders, and notice of recently enacted public laws.

To subscribe to the Federal Register Table of Contents LISTSERV electronic mailing list, go to http://listserv.access.gpo.gov and select Online mailing list archives, FEDREGTOC-L, Join or leave the list (or change settings); then follow the instructions.

CFR PARTS AFFECTED IN THIS ISSUE

A cumulative list of the parts affected this month can be found in the Reader Aids section at the end of this issue.

7 CFR
966 43709
Proposed Rules:
1710 43723
1717 43723
1721 43723
1724 43723
1730 43723

14 CFR
Proposed Rules:
39 (3 documents) 43734, 43736, 43738

15 CFR
774 43711
922 43942

17 CFR
Proposed Rules:
15 43968
16 43968
17 43968
18 43968
20 43968

18 CFR
284 43711

19 CFR
Proposed Rules:
4 43740
10 43740
18 43740
19 43740
113 43740
122 43740
123 43740
141 43740
142 43740
143 43740
144 43740
146 43740
151 43740
181 43740

30 CFR
75 43721

33 CFR
Proposed Rules:
151 43741
155 43741
156 43741
157 43741

37 CFR
Proposed Rules:
1 (2 documents) 43742, 43759

46 CFR
Proposed Rules:
197 43741

47 CFR
Proposed Rules:
54 43773

48 CFR
Ch. 1 (2 documents) 44046, 44066
1 (2 documents) 44047, 44065
2 44047
4 44047
16 (3 documents) 44059, 44062, 44065
22 44065
29 44063
32 44059
52 (3 documents) 44047, 44059, 44065
53 44064
Proposed Rules:
8 43780
12 43780
16 43780
52 43780
1401 43782
1452 43782
1480 43782

50 CFR
665 43721
Proposed Rules:
17 (3 documents) 43796, 43799, 43906
600 43803

Rules and Regulations

Federal Register
Vol. 77, No. 144
Thursday, July 26, 2012

This section of the FEDERAL REGISTER contains regulatory documents having general applicability and legal effect, most of which are keyed to and codified in the Code of Federal Regulations, which is published under 50 titles pursuant to 44 U.S.C. 1510.

The Code of Federal Regulations is sold by the Superintendent of Documents. Prices of new books are listed in the first FEDERAL REGISTER issue of each week.

DEPARTMENT OF AGRICULTURE

Agricultural Marketing Service

7 CFR Part 966

[Doc. No. AMS–FV–11–0080; FV11–966–1 FR]

Tomatoes Grown in Florida; Increased Assessment Rate

AGENCY: Agricultural Marketing Service, USDA.

ACTION: Final rule.

SUMMARY: This rule increases the assessment rate established for the Florida Tomato Committee (Committee) for the 2011–12 and subsequent fiscal periods from $0.0275 to $0.037 per 25-pound carton of tomatoes handled. The Committee locally administers the marketing order which regulates the handling of tomatoes grown in Florida. Assessments upon tomato handlers are used by the Committee to fund reasonable and necessary expenses of the program. The fiscal period begins August 1 and ends July 31. The assessment rate will remain in effect indefinitely unless modified, suspended, or terminated.

DATES: *Effective Date:* July 27, 2012.

FOR FURTHER INFORMATION CONTACT: Doris Jamieson, Marketing Specialist, or Christian D. Nissen, Regional Director, Southeast Marketing Field Office, Marketing Order and Agreement Division, Fruit and Vegetable Program, AMS, USDA; Telephone: (863) 324–3375, Fax: (863) 325–8793, or Email: *Doris.Jamieson@ams.usda.gov* or *Christian.Nissen@ams.usda.gov.*

Small businesses may request information on complying with this regulation by contacting Laurel May, Marketing Order and Agreement Division, Fruit and Vegetable Program, AMS, USDA, 1400 Independence Avenue SW., STOP 0237, Washington, DC 20250–0237; Telephone: (202) 720–2491, Fax: (202) 720–8938, or Email: *Laurel.May@ams.usda.gov.*

SUPPLEMENTARY INFORMATION: This rule is issued under Marketing Agreement No. 125 and Order No. 966, both as amended (7 CFR part 966), regulating the handling of tomatoes grown in Florida, hereinafter referred to as the ''order.'' The order is effective under the Agricultural Marketing Agreement Act of 1937, as amended (7 U.S.C. 601–674), hereinafter referred to as the ''Act.''

The Department of Agriculture (USDA) is issuing this rule in conformance with Executive Order 12866.

This rule has been reviewed under Executive Order 12988, Civil Justice Reform. Under the marketing order now in effect, Florida tomato handlers are subject to assessments. Funds to administer the order are derived from such assessments. It is intended that the assessment rate as issued herein will be applicable to all assessable tomatoes beginning August 1, 2011, and continue until amended, suspended, or terminated.

The Act provides that administrative proceedings must be exhausted before parties may file suit in court. Under section 608c(15)(A) of the Act, any handler subject to an order may file with USDA a petition stating that the order, any provision of the order, or any obligation imposed in connection with the order is not in accordance with law and request a modification of the order or to be exempted therefrom. Such handler is afforded the opportunity for a hearing on the petition. After the hearing, USDA would rule on the petition. The Act provides that the district court of the United States in any district in which the handler is an inhabitant, or has his or her principal place of business, has jurisdiction to review USDA's ruling on the petition, provided an action is filed not later than 20 days after the date of the entry of the ruling.

This rule increases the assessment rate established for the Committee for the 2011–12 and subsequent fiscal periods from $0.0275 to $0.037 per 25-pound carton of tomatoes.

The Florida tomato marketing order provides authority for the Committee, with the approval of USDA, to formulate an annual budget of expenses and collect assessments from handlers to administer the program. The members of the Committee are producers of Florida tomatoes. They are familiar with the Committee's needs and with the costs for goods and services in their local area and are thus in a position to formulate an appropriate budget and assessment rate. The assessment rate is formulated and discussed in a public meeting. Thus, all directly affected persons have an opportunity to participate and provide input.

For the 2009–10 and subsequent fiscal periods, the Committee recommended, and USDA approved, an assessment rate that would continue in effect from fiscal period to fiscal period unless modified, suspended, or terminated by USDA upon recommendation and information submitted by the Committee or other information available to USDA.

The Committee met on August 23, 2011, and unanimously recommended 2011–12 expenditures of $1,496,452 and an assessment rate of $0.037 per 25-pound carton of tomatoes. In comparison, last year's budgeted expenditures were $1,496,971. The assessment rate of $0.037 is $0.0095 higher than the rate currently in effect.

The Committee estimates the 2011–2012 crop to be approximately 35 million 25-pound cartons, down from the 45 million cartons estimated for last year. At the current assessment rate, assessment income would equal only $962,500, an amount insufficient to cover the Committee's anticipated expenditures. Therefore, the Committee voted to increase the assessment rate in order to generate sufficient funds to meet Committee expenses.

The major expenditures recommended by the Committee for the 2011–12 year include $575,000 for education and promotion, $436,372 for salaries, $250,000 for research, and $64,000 for office space. Budgeted expenses for these items in 2010–11 were $535,500, $436,372, $250,000, and $62,283, respectively.

The assessment rate recommended by the Committee was derived by dividing anticipated expenses by expected shipments of Florida tomatoes. Tomato shipments for the year are estimated at 35 million 25-pound cartons which should provide $1,295,000 in assessment income. Income derived from handler assessments, along with interest income, USDA Market Access Program (MAP) funds, and funds from the Committee's authorized reserve,

should be adequate to cover budgeted expenses. Funds in the reserve (approximately $200,000) will be kept within the maximum permitted by the order of not to exceed one fiscal period's expenses as stated in § 966.44.

The assessment rate established in this rule will continue in effect indefinitely unless modified, suspended, or terminated by USDA upon recommendation and information submitted by the Committee or other available information.

Although this assessment rate will be in effect for an indefinite period, the Committee will continue to meet prior to or during each fiscal period to recommend a budget of expenses and consider recommendations for modification of the assessment rate. The dates and times of Committee meetings are available from the Committee or USDA. Committee meetings are open to the public and interested persons may express their views at these meetings. USDA will evaluate Committee recommendations and other available information to determine whether modification of the assessment rate is needed. Further rulemaking will be undertaken as necessary. The Committee's 2011–12 budget and those for subsequent fiscal periods would be reviewed and, as appropriate, approved by USDA.

Final Regulatory Flexibility Analysis

Pursuant to requirements set forth in the Regulatory Flexibility Act (RFA) (5 U.S.C. 601–612), the Agricultural Marketing Service (AMS) has considered the economic impact of this rule on small entities. Accordingly, AMS has prepared this final regulatory flexibility analysis.

The purpose of the RFA is to fit regulatory actions to the scale of business subject to such actions in order that small businesses will not be unduly or disproportionately burdened. Marketing orders issued pursuant to the Act, and the rules issued thereunder, are unique in that they are brought about through group action of essentially small entities acting on their own behalf.

There are approximately 100 producers of tomatoes in the production area and approximately 80 handlers subject to regulation under the marketing order. Small agricultural producers are defined by the Small Business Administration (SBA) as those having annual receipts less than $750,000, and small agricultural service firms are defined as those whose annual receipts are less than $7,000,000 (13 CFR 121.201).

Based on industry and Committee data, the average annual price for fresh Florida tomatoes during the 2010–11 season was approximately $13.88 per 25-pound container, and total fresh shipments for the 2010–11 season were 36,100,637 25-pound cartons of tomatoes. Committee data indicates that approximately 21 percent of the handlers handle 90 percent of the total volume shipped. Based on the average price, about 80 percent of handlers could be considered small businesses under SBA's definition. In addition, based on production data, grower prices as reported by the National Agricultural Statistics Service, and the total number of Florida tomato growers, the average annual grower revenue is below $750,000. Thus, the majority of handlers and producers of Florida tomatoes may be classified as small entities.

This rule increases the assessment rate established for the Committee and collected from handlers for the 2011–12 and subsequent fiscal periods from $0.0275 to $0.037 per 25-pound carton of tomatoes. The Committee unanimously recommended 2011–12 expenditures of $1,496,452 and an assessment rate of $0.037 per 25-pound carton of tomatoes. The assessment rate of $0.037 is $0.0095 higher than the 2010–11 rate. The quantity of assessable tomatoes for the 2011–12 season is estimated at 35 million cartons. Thus, the $0.037 rate should provide $1,295,000 in assessment income. Income derived from handler assessments, along with interest income, MAP funds, and funds from the Committee's authorized reserve fund, should be adequate to meet this year's expenses.

The major expenditures recommended by the Committee for the 2011–12 year include $575,000 for Education and Promotion, $436,372 for salaries, $250,000 for research, and $64,000 for office space. Budgeted expenses for these items in 2010–11 were $535,500, $436,372, $250,000, and $62,283, respectively.

The Committee estimates the 2011–12 crop to be approximately 35 million 25-pound cartons, down from the 45 million cartons estimated for last year. At the current assessment rate, assessment income would equal only $962,500, an amount insufficient to cover the Committee's anticipated expenditures. Therefore, the Committee voted to increase the assessment rate in order to generate sufficient funds to meet Committee expenses.

The Committee reviewed and unanimously recommended 2011–12 expenditures of $1,496,452. Prior to arriving at this budget, the Committee considered information from various sources, such as the Committee's Executive Subcommittee, Finance Subcommittee, and Education and Promotion Subcommittee. Alternative expenditure levels were discussed by these groups, based upon the relative value of various education and promotion projects to the tomato industry. The assessment rate of $0.037 per 25-pound carton of assessable tomatoes was then determined by dividing the total recommended budget by the quantity of assessable tomatoes, estimated at 35 million 25-pound cartons for the 2011–12 year. The increased assessment rate should provide $1,295,000 in assessment income. This is approximately $201,452 below the anticipated expenses, which the Committee determined to be acceptable.

A review of historical information and preliminary information pertaining to the upcoming crop year indicates that the grower price for the 2011–12 season could range between $32.80 and $4.83 per 25-pound carton of tomatoes. Therefore, the estimated assessment revenue for the 2011–12 crop year as a percentage of total grower revenue could range between .1 and .8 percent.

This action increases the assessment obligation imposed on handlers. While assessments impose some additional costs on handlers, the costs are minimal and uniform on all handlers. Some of the additional costs may be passed on to producers. However, these costs are offset by the benefits derived by the operation of the marketing order. In addition, the Committee's meeting was widely publicized throughout the Florida tomato industry and all interested persons were invited to attend the meeting and participate in Committee deliberations on all issues. Like all Committee meetings, the August 23, 2011, meeting was a public meeting and all entities, both large and small, were able to express views on this issue.

In accordance with the Paperwork Reduction Act of 1995, (44 U.S.C. Chapter 35), the order's information collection requirements have been previously approved by the Office of Management and Budget (OMB) and assigned OMB No. 0581–0178 Vegetable and Specialty Crops. No changes in those requirements as a result of this action are necessary. Should any changes become necessary, they would be submitted to OMB for approval.

This rule imposes no additional reporting or recordkeeping requirements on either small or large Florida tomato handlers. As with all Federal marketing order programs, reports and forms are periodically reviewed to reduce

information requirements and duplication by industry and public sector agencies. As noted in the initial regulatory flexibility analysis, USDA has not identified any relevant Federal rules that duplicate, overlap, or conflict with this final rule.

AMS is committed to complying with the E–Government Act, to promote the use of the Internet and other information technologies to provide increased opportunities for citizen access to Government information and services, and for other purposes.

A proposed rule concerning this action was published in the **Federal Register** on April 10, 2012 (77 FR 21492). Copies of the proposed rule were also mailed or sent via facsimile to all tomato handlers. Finally, the proposal was made available through the Internet by USDA and the Office of the Federal Register. A 15-day comment period ending April 25, 2012, was provided for interested persons to respond to the proposal. Three comments were received in support of the proposal. One commenter stated that he initially had concerns regarding the increase in the assessment rate. However, after reviewing the Committee's budget of expenditures and noting that the increase is paid uniformly among all handlers, he stated the increase was necessary and fairly distributed. Another commenter noted that the increase is necessary due to the rising prices of goods and services and is only proposed to cover budgeted expenses. Another commenter stated the increase would improve the income for local farmers.

Accordingly, no changes will be made to the rule as proposed, based on the comments received.

A small business guide on complying with fruit, vegetable, and specialty crop marketing agreements and orders may be viewed at: *www.ams.usda.gov/MarketingOrdersSmallBusinessGuide.* Any questions about the compliance guide should be sent to Laurel May at the previously mentioned address in the **FOR FURTHER INFORMATION CONTACT** section.

After consideration of all relevant material presented, including the information and recommendation submitted by the Committee and other available information, it is hereby found that this rule, as hereinafter set forth, will tend to effectuate the declared policy of the Act.

Pursuant to 5 U.S.C. 553, it also found and determined that good cause exists for not postponing the effective date of this rule until 30 days after publication in the **Federal Register** because handlers are already receiving 2011–12 crop tomatoes from growers; the marketing order requires that the rate of assessment for each fiscal period apply to all assessable tomatoes handled during such period; and, the Committee needs to have sufficient funds to pay its expenses which are incurred on a continuous basis. Further, handlers are aware of this rule which was recommended at a public meeting. Also, a 15-day comment period was provided for in the proposed rule.

List of Subjects in 7 CFR Part 966

Marketing agreements, Reporting and recordkeeping requirements, Tomatoes.

For the reasons set forth in the preamble, 7 CFR part 966 is amended as follows:

PART 966—TOMATOES GROWN IN FLORIDA

■ 1. The authority citation for 7 CFR part 966 continues to read as follows:

Authority: 7 U.S.C. 601–674.

■ 2. Section 966.234 is revised to read as follows:

§ 966.234 Assessment rate.

On and after August 1, 2011, an assessment rate of $0.037 per 25-pound carton is established for Florida tomatoes.

Dated: July 20, 2012.

David R. Shipman,

Administrator, Agricultural Marketing Service.

[FR Doc. 2012–18317 Filed 7–25–12; 8:45 am]

BILLING CODE 3410–02–P

DEPARTMENT OF COMMERCE

Bureau of Industry and Security

15 CFR Part 774

The Commerce Control List

CFR Correction

In Title 15 of the Code of Federal Regulations, Parts 300 to 799, revised as of January 1, 2012, in supplement no. 1 to part 774, make the following corrections:

1. In Category 3:
   A. On page 766, in 3A001, remove the second entry for c.1.b.1.
   B. On page 768, in 3A002, remove the second paragraph ''CIV''.
   C. On page 782, in 3C001, under ''Items:'' remove ''a. Silicon;''.
2. In Category 4:
   A. On page 790, in 4A994, in the heading correct ''therefore'' to read ''therefor''.
   B. On page 793, in 4E993, remove paragraph c.
3. In Category 5:
   A. On page 794, in part I, in 5A001, add ''or antennae'' after ''Unit: Equipment''.
   B. On page 798, in part I, in 5A991, remove the note following paragraph c.2.
   C. On page 803, in part II, in 5A003, in the table for ''License Requirements'', remove the entry for EI and place it below the table as an indented paragraph.
   D. On page 805, in part II, above 5D002, add the headings ''C. Materials—[Reserved]'' and ''D. Software''.
   E. On page 805, in part II, in 5D002, in the table for ''License Requirements'', remove the entry for EI and place it below the table as an indented paragraph.
   F. On page 806, in part II, in 5E002, in the License Requirement Note, remove ''5D002.a or 5D002.c'' and insert ''5D002'' in its place.
   G. On page 806, in part II, in 5E002, after the License Requirement Note, remove ''Refer to § 742.15 of the EAR''.
   H. On page 807, in part II, in 5E002, after ''Related Controls'' and before ''Items'', add ''*Related Definitions:* N/A''.

[FR Doc. 2012–18365 Filed 7–25–12; 8:45 am]

BILLING CODE 1505–01–D

DEPARTMENT OF ENERGY

Federal Energy Regulatory Commission

18 CFR Part 284

[Docket No. RM96–1–037; Order No. 587–V]

Standards for Business Practices of Interstate Natural Gas Pipelines

AGENCY: Federal Energy Regulatory Commission.

ACTION: Final rule.

SUMMARY: In this Final Rule, the Federal Energy Regulatory Commission (Commission) amends its regulations to incorporate by reference the latest version (Version 2.0) of certain business practice standards adopted by the Wholesale Gas Quadrant (WGQ) of the North American Energy Standards Board (NAESB) applicable to natural gas pipelines. In addition, based on the minor corrections and errata made by NAESB and reported to the Commission on May 4, 2012, the Commission will incorporate by reference certain standards that it earlier proposed not to

incorporate, as the revised standards no longer conflict with Commission regulations. In this Final Rule, the Commission also provides guidance on the criteria the Commission will use in deciding whether to grant or deny requests for waivers or extensions of time and modifies the compliance filing requirements to add transparency as to where in the tariff incorporated standards may be found.

DATES: *Effective Date:* This rule will become effective August 27, 2012. The incorporation by reference of certain publications in this rule is approved by the Director of the Federal Register as of August 27, 2012.

FOR FURTHER INFORMATION CONTACT:

Adam Bednarczyk (technical issues), Office of Energy Market Regulation, Federal Energy Regulatory Commission, 888 First Street NE., Washington, DC 20426, (202) 502–6444, Email: *Adam.Bednarczyk@ferc.gov.*

Tony Dobbins (technical issues), Office of Energy Policy and Innovation, Federal Energy Regulatory Commission, 888 First Street NE., Washington, DC 20426, (202) 502–6630, Email: *Tony.Dobbins@ferc.gov.*

Gary D. Cohen (legal issues), Office of the General Counsel, Federal Energy Regulatory Commission, 888 First Street NE., Washington, DC 20426, (202) 502–8321, Email: *Gary.Cohen@ferc.gov.*

SUPPLEMENTARY INFORMATION:

TABLE OF CONTENTS

	Paragraph Nos.
I. Background	2
II. Discussion	11
A. Incorporation by Reference of the NAESB Standards	11
B. Incorporation of Standards 0.3.19 and 0.3.21	17
C. Other Standards Issues Raised by Commenters	21
1. Gas-Electric Communication Standards	21
2. Interpretations of NAESB WGQ Standards	27
3. Definition of Operating Capacity	29
III. Implementation Schedule and Procedures for Waivers and Extension of Time	31
A. Implementation Schedule	33
B. Waivers and Extensions of Time	38
C. Comments on Implementation and Waiver Policy	40
IV. Notice of Use of Voluntary Consensus Standards	42
V. Information Collection Statement	43
VI. Environmental Analysis	50
VII. Regulatory Flexibility Act	51
VIII. Document Availability	55
IX. Effective Date and Congressional Notification	58

Before Commissioners: Jon Wellinghoff, Chairman; Philip D. Moeller, John R. Norris, Cheryl A. LaFleur, and Tony T. Clark.

Final Rule

(Issued July 19, 2012)

1. In this Final Rule, the Federal Energy Regulatory Commission (Commission) amends its regulations at 18 CFR 284.12 to incorporate by reference the latest version (Version 2.0) of certain business practice standards adopted by the Wholesale Gas Quadrant (WGQ) of the North American Energy Standards Board (NAESB) applicable to natural gas pipelines including Standards 0.3.19 and 0.3.21 as modified by the minor corrections and errata approved by NAESB. In the Notice of Proposed Rulemaking,[1] the Commission proposed not to incorporate Standards 0.3.19 and 0.3.21 because these standards conflicted with Commission regulations. NAESB's minor corrections ensure consistency between the standards and the Commission regulations and the Commission will therefore incorporate the standards by reference. In this Final Rule, the Commission also provides guidance on the criteria the Commission will use in deciding whether to grant or deny requests for waivers or extensions of time and modifies the compliance filing requirements to add transparency as to where in the tariff incorporated standards may be found.

I. Background

2. Since 1996, the Commission has adopted regulations to standardize the business practices and communication methodologies of interstate natural gas pipelines to create a more integrated and efficient pipeline grid. These regulations have been promulgated in the Order No. 587 series of orders,[2] wherein the Commission has incorporated by reference standards for interstate natural gas pipeline business practices and electronic communications that were developed and adopted by NAESB's WGQ. Upon incorporation by reference, the Version 2.0 Standards will become part of the Commission's regulations and compliance with these standards by interstate natural gas pipelines will become mandatory.

3. On March 4, 2011, NAESB filed a report informing the Commission that it had adopted and ratified Version 2.0 of its business practice standards applicable to natural gas pipelines. The Version 2.0 Standards revised the Version 1.9 Standards to include: (1) Standards to support gas-electric interdependency; (2) standards created for Capacity Release redesign due to the elimination of Electronic Data Interchange (EDI) for Capacity Release Upload information; (3) standards to support the Electronic Delivery Mechanism (EDM); (4) standards to support the Customer Security Administration (CSA) Process; (5) standards for pipeline postings of information regarding waste heat; and

[1] *Standards for Business Practices of Interstate Natural Gas Pipelines,* Notice of Proposed Rulemaking, 77 FR 10415 (Feb. 22, 2012), FERC Stats. & Regs. ¶ 32,686 (2012) (Version 2.0 NOPR).

[2] This series of orders began with the Commission's issuance of *Standards for Business Practices of Interstate Natural Gas Pipelines,* Order No. 587, FERC Stats. & Regs. ¶ 31,038 (1996). The most recent order in this series is Order No. 587–U, issued on March 24, 2010, wherein the Commission incorporated by reference the Version 1.9 WGQ Business Practice Standards. *Standards for Business Practices of Interstate Natural Gas Pipelines,* Order No. 587–U, FERC Stats. & Regs. ¶ 31,307 (2010).

(6) minor technical maintenance revisions designed to more efficiently process wholesale natural gas transactions.

4. On June 28, 2011, NAESB filed a report informing the Commission that it had made modifications to the NAESB WGQ Version 2.0 Standards to correct various minor errors. These errata corrections make minor revisions to the NAESB WGQ Standards and Data Elements including revisions to the: (1) Datasets for Additional Standards; (2) Nomination Related Datasets; (3) Flowing Gas Related Standards; (4) Invoicing Related Datasets; (5) EDM Related Standards; and (6) Capacity Release Related Standards and Datasets.

5. Further, on October 11, 2011, NAESB filed a report informing the Commission that it had made additional modifications to the NAESB WGQ Version 2.0 Standards to correct various minor errors in the Nominations Related and Capacity Release Related Datasets.

6. On December 22, 2011, NAESB reported to the Commission that it had made additional modifications to the NAESB WGQ Version 2.0 Standards to correct various minor errors. The errata corrections make minor revisions to the NAESB WGQ Standards and Datasets including revisions to the: (1) Nominations Related Datasets; (2) Capacity Release Related Datasets; and (3) Quadrant Electronic Delivery Mechanism Related Standards.

7. Consistent with its practice in past rulemakings where the Commission found benefits in incorporating by reference NAESB's business practice standards,[3] the Commission issued the Version 2.0 NOPR, which proposed to amend the Commission's regulations at 18 CFR 284.12 to incorporate by reference the latest version of certain business practice standards adopted by NAESB's WGQ applicable to natural gas pipelines.[4]

8. The Version 2.0 NOPR proposed not to incorporate by reference Standard 0.3.19, because the Commission found it inconsistent with the requirements of 18 CFR 284.13(d), which does not permit a pipeline to limit the posting of available capacity to a limited number of points, segments, or zones, but requires posting at all receipt and delivery points and on the mainline. Additionally, the Version 2.0 NOPR proposed not to incorporate by reference Standard 0.3.21, because 18 CFR 284.13(d) does not limit the posting of information posting to only two cycles but requires the posting of capacity availability and scheduled capacity ''whenever capacity is scheduled.'' Also, consistent with past practice, the Commission proposed not to incorporate Standards 4.3.4 and 10.3.2 regarding record retention requirements,[5] NAESB's interpretations of its standards,[6] its optional contracts,[7] and the WEQ/WGQ eTariff Related Standard.[8] The Commission further provided guidance regarding the procedures for pipelines to incorporate the standards into their tariffs and explained its policy regarding pipeline requests for waiver or extension of time to comply with the standards.

9. In response to the Version 2.0 NOPR, comments were filed by six commenters.[9] The comments expressed a variety of views, including requests for clarification and modification of the Commission's policy on extensions of time to comply with NAESB WGQ Standards. Among the comments filed with the Commission were comments from NAESB explaining that its WGQ Executive Committee was in the process of voting on two standards to rectify the inconsistency with respect to Standards 0.3.19 and 0.3.21 noted by the Commission in the Version 2.0 NOPR. On May 4, 2012, NAESB filed a status report informing the Commission that it had finalized the two corrections to Standards 0.3.19 and 0.3.21.

10. On May 8, 2012, the Commission issued a notice providing interested parties an opportunity to file comments with respect to the two corrected standards adopted by NAESB and whether the Commission should incorporate these revised standards into its regulations.[10] In response to this notice, three comments were filed, all of which supported the Commission's incorporation of the revised standards.

II. Discussion

A. Incorporation by Reference of the NAESB Standards

11. After a review of the comments filed in response to the Version 2.0 NOPR, the Commission is amending part 284 of its regulations to incorporate by reference Version 2.0 of the NAESB WGQ's consensus standards, including corrected Standards 0.3.19 and 0.3.21.[11]

12. The NAESB WGQ Version 2.0 standards include new and modified business practice standards to support gas-electric interdependency by further defining the roles and responsibilities of each participant under the Gas/Electric Operational Communication Standards promulgated in Order No. 698,[12] and giving more details on what is included in various notices through the creation of 15 new notice types so that public utilities may more easily identify relevant pipelines' system conditions. The new notice types are used in the Notices section of pipelines' Informational Postings on their Web sites and are used to notify shippers and interested parties of intraday bumps, operational flow orders, and other critical information by email or other electronic methods. This increase in granularity will afford pipelines greater flexibility in assigning specific designations to the notices and will allow shippers and other interested stakeholders to filter pipeline notices more effectively, so that they can focus

[3] *See, e.g.,* Order No. 587, FERC Stats. & Regs. ¶ 31,038 at 30,059, where the Commission found that the adoption of consensus standards is appropriate because the consensus process helps ensure the reasonableness of the standards by requiring that the standards draw support from a broad spectrum of industry participants representing all segments of the industry. The Commission also noted that, because the industry has to conduct business under these standards, the Commission's regulations should reflect those standards that have the widest possible support. In section 12(d) of the National Technology Transfer and Advancement Act of 1995 (NTT&AA), Congress affirmatively requires federal agencies to use technical standards developed by voluntary consensus standards organizations, like NAESB, as a means to carry out policy objectives or activities. These findings remain valid.

[4] *See supra* n.1. In its Version 2.0 Standards, the WGQ made the following changes to its Version 1.9 Standards:

It revised Principle 4.1.32; Definitions 0.2.1, 0.2.2, 0.2.3, 5.2.1, 5.2.4, and 5.2.5; Standards 0.3.11 through 0.3.15, 2.3.34, 4.3.16, 4.3.23, 4.3.28, 4.3.29, 4.3.54, 5.3.1 through 5.3.14, 5.3.16, 5.3.19 through 5.3.21, 5.3.24 through 5.3.27, 5.3.31 through 5.3.33, 5.3.38, 5.3.42, 5.3.48, 5.3.50, 5.3.51, 5.3.60, 5.3.62, 5.3.62a, and 5.3.63 through 5.3.69; and Datasets 1.4.1 through 1.4.6, 2.4.1, 2.4.3, 2.4.4, 2.4.6, 2.4.7, 3.4.1, 3.4.4, 5.4.14 through 5.4.17, and 5.4.20 through 5.4.22.

It added Definition 0.2.4; Standards 0.3.18 through 0.3.22, 4.3.100 through 4.3.102, 5.3.70 through 5.3.72; and Datasets 0.4.2, 0.4.3, and 5.4.24 through 5.4.27.

It deleted Standards 5.3.17, 5.3.30, 5.3.43, and 5.3.61; and Datasets 5.4.1 through 5.4.13, 5.4.18, and 5.4.19.

[5] *See, e.g., Standards for Business Practices of Interstate Natural Gas Pipelines,* Final Rule, Order No. 587–T, FERC Stats. & Regs. ¶ 31,289, at P 5 & n.9 (2009).

[6] *Standards for Business Practices and Communication Protocols for Public Utilities,* Order No. 676–E, FERC Stats. & Regs. ¶ 31,299, at n.16 (2009).

[7] *Id.*

[8] *See Electronic Tariff Filings,* Order No. 714, FERC Stats. & Regs. ¶ 31,276 (2008).

[9] In the Appendix to this Final Rule, we identify all the commenters that filed comments in response to the Version 2.0 NOPR, along with the abbreviations we are using in this Final Rule to identify these commenters.

[10] *Standards for Business Practices of Interstate Natural Gas Pipelines,* 77 FR 28331 (May 14, 2012).

[11] In addition, as discussed in the Version 2.0 NOPR and above, we are not incorporating by reference Standards 4.3.4 and 10.3.2, NAESB's interpretation of its standards, its optional contracts, or the WEQ/WGQ eTariff Related Standards.

[12] *Standards for Business Practices of Interstate Natural Gas Pipelines; Standards for Business Practices for Public Utilities,* Order No. 698, FERC Stats. & Regs. ¶ 31,251, *order on clarification and reh'g,* Order No. 698–A, 121 FERC ¶ 61,264 (2007).

on specific types of notices they deem important, while ignoring notices they deem irrelevant.

13. The revised standards also include revisions to facilitate the Commission's FY 2009–2014 Strategic Plan [13] objective of evaluating the feasibility of installing waste heat recovery systems as a way to promote the efficient design and operation of jurisdictional natural gas facilities by specifying the location where such information will be posted on pipelines' Web sites.

14. To implement these standards, natural gas pipelines will be required to file tariff sheets to reflect the changed standards by October 1, 2012, to take effect on December 1, 2012, and they will be required to comply with these standards on and after December 1, 2012.

15. NAESB used its consensus procedures to develop and approve the Version 2.0 Standards.[14] As the Commission found in Order No. 587, the adoption of consensus standards is appropriate because the consensus process helps ensure the reasonableness of the standards by requiring that the standards draw support from a broad spectrum of industry participants representing all segments of the industry. Moreover, since the industry itself has to conduct business under these standards, the Commission's regulations should reflect those standards that have the widest possible support. In section 12(d) of the NTT&AA,[15] Congress affirmatively requires federal agencies to use technical standards developed by voluntary consensus standards organizations, like NAESB, as means to carry out policy objectives or activities determined by the agencies unless an agency determines that the use of such standards would be inconsistent with applicable law or otherwise impractical.[16]

16. The comments on the Version 2.0 NOPR generally supported the adoption of the standards. In the discussion below, we will address the issues raised in the comments.

B. Incorporation of Standards 0.3.19 and 0.3.21

17. In the Version 2.0 NOPR, the Commission found that two of the proposed standards, WGQ Standards 0.3.19 and 0.3.21, as originally adopted by the WGQ appeared to be inconsistent with the Commission's posting regulations in 18 CFR 284.13(d).[17] For this reason, the Commission proposed in the Version 2.0 NOPR not to incorporate these standards by reference.

Filings

18. On May 4, 2012, NAESB filed a status report informing the Commission that it had finalized corrections to the two standards, which it believed met the Commission's objections to the original standards.[18] In response to the Commission's notice inviting comments on NAESB's corrections, INGAA, Southern Star, and AGA each filed comments expressing support for incorporation by reference of the corrected standards.[19]

Commission Determination

19. Based on the modifications made by NAESB WGQ, the Commission will incorporate by reference the modified standards, as they no longer conflict with the Commission's regulations. As noted in the Version 2.0 NOPR, the original NAESB WGQ Version Standard 0.3.19 allowed the pipeline to choose whether to post Operationally Available Capacity, Operating Capacity, and Total Scheduled Quantity at either a point, segment or zone level.[20] This standard conflicted with section 284.13(d) [21] of the regulations that does not permit the pipeline to limit the posting to a point, segment, or zone, but requires posting at all receipt and delivery points and on the mainline.[22] The revised Standard 0.3.19 [23] removed the provision permitting the pipeline to choose the level at which it reports and therefore no longer conflicts with section 284.13(d) [24] of our regulations.

20. The original NAESB WGQ Version 2.0 Standard 0.3.21 required the posting of total scheduled quantity and operationally available capacity information only at the timely and evening nominations cycles.[25] Section 284.13(d), however, does not limit the posting to only two cycles but requires the posting of capacity availability and scheduled capacity ''whenever capacity is scheduled.'' Revised Standard 0.3.21 provides, consistent with the regulation, that the required information ''should be updated by the Transportation Service Provider to reflect scheduling changes and be reported promptly whenever capacity is scheduled.''

C. Other Standards Issues Raised by Commenters

1. Gas-Electric Communication Standards

21. The Commission incorporated by reference the NAESB Wholesale Electric Quadrant (WEQ) and WGQ Gas/Electric Coordination Standards in Order Nos. 698 and 698–A [26] to ensure that pipelines have relevant planning information to assist in maintaining the operational integrity and reliability of pipeline service, as well as to provide gas-fired power plant operators with information as to whether hourly flow deviations can be honored.[27] In the NAESB WGQ Version 2.0 Standards, NAESB modified and developed additional standards to further enhance that coordination. NAESB made modifications to its WGQ Standards

[13] Federal Energy Regulatory Commission, Strategic Plan, FY 2009–2014 at 25. *http://www.ferc.gov/about/strat-docs/FY-09-14-strat-plan-print.pdf.*

[14] This process first requires a super-majority vote of 17 out of 25 members of the WGQ's Executive Committee with support from at least two members from each of the five industry segments—Distributors, End Users, Pipelines, Producers, and Services (including marketers and computer service providers). For final approval, 67 percent of the WGQ's general membership voting must ratify the standards.

[15] *See* n.3 *supra.*

[16] Public Law 104–113, § 12(d), 110 Stat. 775 (1996), 15 U.S.C. 272 note (1997).

[17] 18 CFR 284.13(d). Section 284.13(d) states in relevant part that an interstate pipeline must provide on its Internet Web site and in downloadable file formats, in conformity with § 284.12, equal and timely access to information relevant to the availability of all transportation services whenever capacity is scheduled, including, but not limited to, the availability of capacity at receipt points, on the mainline, at delivery points, and in storage fields, whether the capacity is available directly from the pipeline or through capacity release, the total design capacity of each point or segment on the system, the amount scheduled at each point or segment whenever capacity is scheduled, and all planned and actual service outages or reductions in service capacity.

[18] NAESB corrections MC12005 and MC12006.

[19] INGAA Supplemental Comments at 2, Southern Star Supplemental Comments at 2, AGA Comments at 2.

[20] The original NAESB WGQ Version 2.0 Standard 0.3.19 stated: Operationally Available Capacity (OAC), Operating Capacity (OPC) and Total Scheduled Quantity (TSQ) are associated information and should be reported at the same level. Transportation Service Providers should report OAC, OPC and TSQ at, at least one of, point, segment or zone level.

[21] *See supra* n.17.

[22] Section 284.13(d) states that the pipeline must post ''information relevant to the availability of all transportation services whenever capacity is scheduled, including, but not limited to, the availability of capacity at receipt points, on the mainline, at delivery points, and in storage fields.''

[23] The revised Standard reads: Operationally Available Capacity (OAC), Operating Capacity (OPC) and Total Scheduled Quantity (TSQ) are associated information and should be reported at the same level of detail.''

[24] *See supra* n.17.

[25] The original NAESB WGQ Standard 0.3.21 states: The Total Scheduled Quantity and the Operationally Available Capacity information should be updated by the Transportation Service Provider to reflect scheduling changes and be reported promptly following the scheduling deadline associated with the timely and evening nominations cycles.

[26] *See supra* n.12.

[27] These standards are more fully summarized in the Version 2.0 NOPR, FERC Stats. & Regs. ¶ 32,686 at P 7.

4.3.28, 4.3.29 and 5.3.38 and developed new Standards 5.3.70 and 5.3.71 to enhance the clarity of the content and format of critical, non-critical, and planned service outage notices issued by pipelines. NAESB also modified the existing gas-electric coordination WGQ Standards 0.2.1 through 0.2.3, 0.3.11, through 0.3.15; and created a new Standard 0.2.4 to further define the roles and responsibilities of each participant under the Gas/Electric Operational Communication Standards promulgated in Order No. 698. As explained in the Version 2.0 NOPR,[28] NAESB also modified WGQ Standard 0.3.14 to change the parties to whom pipelines are required to provide notification of operational flow orders and other critical notices. Under the Version 2.0 Standards, pipelines are now required to provide notification to Balancing Authorities and/or Reliability Coordinators, and Power Plant Gas Coordinators.

Comments

22. Spectra Entities state that the Version 2.0 communication standards designed to enhance communication clarity are a good step on the path towards increasing electric reliability.[29] However, they assert that enhancement of communication and coordination of scheduling are not all that is required to ensure gas supplies to gas-fired generation. Spectra Entities state that it is also necessary that firm pipeline capacity is available and contracted to supply generation.[30]

23. NERC expressed general support for the modifications to Standard 0.3.14 that changed the parties to whom pipelines are required to provide notification of operational flow orders and other critical notices. However, NERC raises a concern about an ambiguity in the language of the standard as modified and urges the Commission to clarify that pipelines must provide notices of operational flow orders and other critical matters to both Balancing Authorities and Reliability Coordinators. NERC states that, with this clarification, it supports the standard as a step in the right direction that will help support the reliability of the bulk power system.[31]

Commission Determination

24. Standard 0.3.14 states:

A Transportation Service Provider should provide Balancing Authorities (BA) and/or Reliability Coordinators (RC) and Power Plant Gas Coordinators (PPGC) with notification of operational flow orders and other critical notices through the PPGC's choice of Electronic Notice Delivery mechanism(s) as set forth in NAESB WGQ Standard Nos. 5.2.1, 5.2.2, and 5.3.35–5.3.38.

25. We interpret this standard to include both Balancing Authorities and Reliability Coordinators as affected parties under the Commission regulations who are eligible to request from the pipeline and receive direct notification through email or Electronic Data Interchange of operational flow orders and other critical notices.[32] If both a Balancing Authority and Reliability Coordinator in a relevant area request such notification, then the pipeline must provide it. The Commission expects Balancing Authorities and Reliability Coordinators to request such notification whenever necessary to ensure the reliability of their systems.

26. Spectra's concern with the availability of firm pipeline capacity to serve gas-fired generators is beyond the scope of this rulemaking.

2. Interpretations of NAESB WGQ Standards

27. INGAA notes that the Commission's policy is not to incorporate NAESB's interpretation of its standards into the Commission's regulations.[33] INGAA recognizes that the Commission's view is that, while interpretations may provide useful guidance, they are not determinative and the Commission does not require pipelines to comply with NAESB's interpretations.[34] But INGAA states that the interpretations can be instructive to the industry on how to implement the standards. Further, INGAA suggests that the interpretations should be given appropriate deference in circumstance in which pipelines elect to rely on the interpretations to implement the standards. INGAA contends that the written interpretations of the NAESB WGQ Standards go through the same comment and voting process as other standards published by NAESB. INGAA requests clarification that pipelines that adhere to the NAESB WGQ Interpretations published with Version 2.0, including any associated errata subject to the Commission's final order in this docket, should be found to be in compliance with the standards.[35]

Commission Determination

28. As stated in the Version 2.0 NOPR, while NAESB's interpretations may provide useful guidance, historically, the Commission's practice has been to not find them determinative and it has not required pipelines to comply with them. Because pipelines are not required to comply with the interpretations, it is not appropriate to include them in the regulations, under which compliance is mandatory. While the Commission has found in the past, and will continue to find, the interpretations a useful interpretative guide to the meaning of standards,[36] we cannot guarantee that the Commission will agree with an interpretation that is not consistent with Commission regulations or with the language of the standards.[37]

3. Definition of Operating Capacity

29. INGAA suggests that NAESB developed the term ''Operating Capacity,'' as used in NAESB WGQ Version 2.0 Standard 0.3.19 and related standards, to comply with a pipeline's requirement to post ''design capacity,'' per 18 CFR 284.13(d).[38] INGAA contends that the term ''Operating Capacity,'' and related business standards and data set, were created with industry support and approved by the full NAESB process. Further, INGAA argues that for the purposes of these NAESB Standards, the terms ''Operating Capacity,'' as defined by NAESB, and ''design capacity'' are interchangeable. Accordingly, INGAA requests that the Commission clarify

[28] *Id.* P 9.

[29] Commenters on the Version 2.0 NOPR, and the abbreviations used to identify them, are listed in the Appendix.

[30] Spectra Entities Comments at 2, 3.

[31] NERC Comments at 3, 4.

[32] This standard refers to the provision of these notices by email or Electronic Data Interchange under NAESB standards 5.3.35–5.3.38. Information regarding operational flow orders and other critical notices also is publicly available on the pipelines' Web sites pursuant to the postings required by 18 CFR 284.12 (b) (3) (vi) and Standards 4.3.27–4.3.29.

[33] INGAA Comments at 3 (citing *Standards for Business Practices and Communication Protocols for Public Utilities,* Order No. 676–E, FERC Stats. & Regs. ¶ 31,299 at n.16).

[34] *Id.* (citing Version 2.0 NOPR at 18).

[35] *Id.*

[36] *See Granite State Gas Transmission, Inc.,* 98 FERC ¶ 61,019, at 61,057 (2002) (relying on GISB's (now NAESB) interpretation); *El Paso Natural Gas Company,* 97 FERC ¶ 61,174, at 61,816 (2001) (recommending parties seek an interpretation of a standard so the record will reflect GISB's construction of the standard); *Ozark Gas Transmission System,* 79 FERC ¶ 61,222, at 62,006 (1997) (granting rehearing based, in part, on interpretation).

[37] *See, e.g., Standards for Business Practices of Interstate Natural Gas Pipelines,* Order No. 587–Q, 100 FERC ¶ 61,105, at P 16 (2002) (interpreting NAESB standard and not deferring to a request to NAESB); *ANR Pipeline Co.,* 80 FERC ¶ 61,210, at 61,833 (1997) (declining to defer in advance to any GISB interpretation, although suggesting that the pipeline obtain such an interpretation); *Great Lakes Gas Transmission Limited Partnership,* 79 FERC ¶ 61,194, at 61,911 (1997) (declining to adopt an interpretation at odds with standard).

[38] NAESB Standard 0.3.18 states in part: ''Operating Capacity (OPC) should be reported as the total capacity which could be scheduled at (or through) the identified point, segment or zone in the indicated direction of flow.''

that pipelines that post ''Operating Capacity'' as defined by NAESB Standards are in compliance with the Commission's requirement for pipelines to post ''design capacity,'' per the requirements of 18 CFR 284.13(d).[39]

Commission Determination

30. We will deny INGAA's request for clarification. NAESB defines Operating Capacity as ''the total capacity which could be scheduled at (or through) the identified point, segment or zone in the indicated direction of flow.'' [40] The Commission's information posting requirements in section 284.13(d), however, require pipelines to post ''Design Capacity,'' not operating capacity. It is not clear that NAESB's term ''Operating Capacity,'' although useful, is equivalent to the term ''Design Capacity'' used in the Commission regulations.[41] We therefore request that the industry, through NAESB, consider whether the two terms are functionally equivalent or specify different types of information and to include this information in its next version update. Should the industry conclude the terms are not equivalent, NAESB should make appropriate revisions to the standards in NAESB's next version by adding a design capacity as a separate reporting category. If industry members believe that operating capacity is a more useful measure than design capacity, they will need to request a revision of 284.13(d). While these issues are being considered, we will not require pipelines to make changes to their current posting procedures.

III. Implementation Schedule and Procedures for Waivers and Extension of Time

31. In the Version 2.0 NOPR, the Commission proposed an implementation schedule that would require compliance with the NAESB WGQ Version 2.0 Standards beginning on the first day of the month after the fourth full month following issuance of the final rule.[42] To clarify, the Commission gave the example that, if the final rule were issued on February 17, 2012, compliance would be required beginning on July 1, 2012.[43]

32. The Commission also proposed in the Version 2.0 NOPR to increase the transparency of the pipelines' incorporation by reference of the NAESB WGQ Standards so that shippers and the Commission will know which tariff provisions implements each standard as well as the status of each standard.[44] To accomplish this, the Commission gave proposed instructions on how pipelines should designate sections in their tariff filings.[45]

A. Implementation Schedule

33. In their comments on the Version 2.0 NOPR, AGA and Southern Star voice support for prompt implementation of the standards.[46] INGAA requests that the Commission revise its implementation requirements to permit a pipeline to file its listing of which tariff provisions implement each NAESB standard and the status of each NAESB standard as part of either a sheet-based or section-based tariff.[47]

Commission Determination

34. The Commission will require natural gas pipelines to comply with the NAESB WGQ Version 2.0 Standards that we are incorporating by reference in this Final Rule beginning on December 1, 2012. We are requiring this implementation schedule to give the natural gas pipelines subject to these standards adequate time to implement these changes. In addition, pipelines must file tariff records to reflect the changed standards by October 1, 2012.

35. We will grant INGAA's request for clarification and allow sheet based solutions. As noted in Order No. 714, companies may determine to structure their tariffs either using the existing tariff sheet format or as sections.[48] The intent of the implementation schedule proposed in the Version 2.0 NOPR was not to preclude sheet based solutions. Accordingly, we will accept sheet-based alternatives.

36. In addition, as proposed in the Version 2.0 NOPR, the Commission is also revising the compliance filing requirements to increase the transparency of the pipelines' incorporation by reference of the NAESB WGQ Standards so that shippers and the Commission will know which tariff provision(s) implements each standard as well as the status of each standard.

(1) The pipelines must designate a single tariff section or tariff sheet(s) under which every NAESB standard is listed.[49]

(2) For each standard, each pipeline must specify in the tariff section or tariff sheet(s) listing all the NAESB standards:

(a) Whether the standard is incorporated by reference;

(b) For those standards not incorporated by reference, the tariff provision that complies with the standard; [50] and

(c) A statement identifying any standards for which the pipeline has been granted a waiver, extension of time, or other variance with respect to compliance with the standard.[51]

(3) If the pipeline is requesting a continuation of an existing waiver or extension of time, it must include a table in its transmittal letter that states the standard for which a waiver or extension of time was granted, and the docket number or order citation to the proceeding in which the waiver or extension was granted.

37. This information will give Commission staff and all shippers a common location that identifies the manner in which the pipeline is incorporating all the NAESB WGQ Standards and the standards with which it is required to comply. The Commission will post on its eLibrary Web site (under Docket No. RM96–1–037) a sample tariff format, to provide filers an illustrative example to aid them in preparing their compliance filings.[52]

B. Waivers and Extensions of Time

38. As discussed in the Version 2.0 NOPR, in previous compliance proceedings there has been a marked increase in the number of requests for waivers or for extensions of time to comply with standards. The

[39] INGAA Comments at 4.

[40] NAESB WGQ Standard No. 0.4.2—Operational Capacity.

[41] For example, while pipelines that post both design and operating capacity, often report the same number for both types of capacity, they may sometimes report differences between operating and design capacity. For example, on June 21, 2012, Northwest Pipeline posted at its Baker Compressor Decreasing point (177) design capacity of 491,000, and Operating Capacity of 700,000. *See, e.g.,* Northwest Pipeline GP, Operationally Available Capacity Report Posting Date/Time: 6/21/2012 8:15 p.m. (*http://www.northwest.williams.com/NWP_Portal/CapacityResultsScrollable.action*). *See also El Paso Natural Gas Co.,* 138 FERC ¶ 61,215 (2012) (differentiating between certificated capacity and sustainable capacity).

[42] Version 2.0 NOPR, FERC Stats. & Regs. ¶ 32,686 at P 24.

[43] *Id.*

[44] *Id.* P 25.

[45] *Id.*

[46] AGA Comments at 4–5, Southern Star Comments at 2.

[47] INGAA Comments at 2–3.

[48] Order No. 714, FERC Stats. & Regs. ¶ 31,276 at P 34.

[49] This section should be a separate tariff record under the Commission's electronic tariff filing requirements and is to be filed electronically using the eTariff portal using the Type of Filing Code 580.

[50] For example, pipelines are required to include the full text of the NAESB nomination and capacity release timeline standards (WGQ Standards 1.3.2(i–v) and 5.3.2) in their tariffs. Order No. 587–U, FERC Stats. & Regs. ¶ 31,307 at P 39 & n.42. The pipeline would indicate which tariff provision complies with each of these standards.

[51] Shippers can use the Commission's electronic tariff system to locate the tariff record containing the NAESB standards, which will indicate the docket in which any waiver or extension of time was granted.

[52] *http://www.ferc.gov/docs-filing/elibrary.asp.*

Commission's orders on these requests have developed a set of general principles that the Commission intends to follow in reviewing such requests in the future.[53] Thus, as discussed in the Version 2.0 NOPR and consistent with existing precedent, the Commission clarifies its policy regarding requests for waivers and extensions of time as well as the information that must accompany such requests as follows:

(1) All waivers and extensions of time will be granted only in reference to the individual set of NAESB standards being adopted (in this case NAESB WGQ's Version 2.0 Standards). Pipelines will need to seek renewal of any such waivers or extensions for each version of the standards the Commission adopts.[54] We will follow this practice to avoid an automatic renewal without oversight of a waiver or extension in a situation where there may no longer be a need to continue the waiver or extension. If circumstances continue to support the need for a waiver or extension, the pipeline can detail those circumstances to the Commission in a new request for waiver or extension.

(2) Waivers or extensions of time will not be granted for standards that merely describe the process by which a pipeline must perform a business function, if it performs that function, and where the standard does not require the pipeline to perform the business function.[55] In such a case, as long as the pipeline does not perform the business function, it does not trigger a requirement to comply with the standard and hence no waiver or extension of time is required. If, however, the pipeline begins performing the business function, the standard(s) will already be in its tariff and the pipeline will be required to comply with the standard(s).[56]

(3) If a pipeline is seeking a renewal of a waiver or extension of time request, it must justify why the waiver or extension should remain in force and it must provide a citation to an order and docket number of the proceeding in which the initial waiver or extension of time was granted.[57]

(4) The Commission ordinarily will decline to grant waivers in cases where pipelines maintain they should not be required to incur the costs of implementing standards shippers are not interested in using. Instead, the Commission's approach to these requests will be to grant the pipeline an extension of time for compliance until 60 days after the pipeline receives a request to comply with the standard.[58] Waivers are justified only when the pipeline can demonstrate that there is good cause not to require the implementation of a standard, even though shippers want to use the standard.

(5) The Commission generally will not entertain waiver or extension of time requests for NAESB WGQ Definitions (x.2.z Standards). The NAESB WGQ Definitions specify and elucidate specific terms of generally applicable business practices and do not require a pipeline to perform any action or incur expense to comply with such Definitions. The Commission sees a potential for problems arising if it allows a pipeline to substitute its own definitions for the consensus definitions developed in the NAESB process.

39. In addition, to provide guidance to pipelines in filing requests for waivers or extensions of time, the Commission will explain its policy regarding waivers of the following four general categories of NAESB standards: (1) Business practice standards; (2) requirements to conduct business electronically using the Internet (Internet Business Standards); (3) Commission Internet posting requirements (Internet Posting Standards); and (4) requirements to conduct computer-to-computer transactions using EDI. It is important for pipelines to identify clearly in their filings the specific standards from which they are seeking waivers or extensions of time. In particular, pipelines need to be clear as to whether they are requesting waivers of the Internet Business Standards or the EDI Standards:

(1) *Waivers or Extensions of Time To Comply With Business Practice Standards.* Waivers or extensions of time to comply with business practice standards will generally be denied because these standards establish the basic principles on which business is required to be conducted. Nonetheless, if a pipeline believes such a waiver or extension of time to comply is justified, it must detail specific reasons why it seeks the waiver or extension of time to comply with the standard and address alternative methods by which it could comply with the objectives of the standard.[59]

(2) *Waivers or Extensions of Time To Comply With the Internet Business Standards.* Waivers or extensions of time to comply with the requirement to conduct business over the Internet generally will be granted based on a pipeline's individual circumstances, such as the size of the pipeline, the number of shippers, its ability to provide electronic services, the demand for such services, and alternative means by which the pipeline conducts the business practice. For smaller pipelines, the Commission has granted waivers of the Internet Business Standards when such pipelines have shown that complying with such standards would prove unduly burdensome.[60] For larger pipelines, the Commission has rarely granted waivers or extensions of time to comply with the Internet Business Standards.[61] However, if a pipeline can demonstrate that shippers are not using a standard, then the Commission generally will grant an extension of time to comply. Such an extension of time ensures that pipelines do not needlessly have to spend money revamping computer services that shippers do not use while, at the same time, ensuring that shippers have access to such services if they need them.

(3) *Waivers or Extensions of Time To Comply With Internet Posting Standards.* The Commission rarely grants waivers or extensions of time to comply with the posting requirements because posting of this information is required by the Commission's regulations. The cost of maintaining and posting information on an Internet Web site is not great even for smaller pipelines.

(4) *Waivers or Extensions of Time To Comply With EDI Standards.* As

[53] *See Standards for Business Practices of Interstate Natural Gas Pipelines, compliance order,* 133 FERC ¶ 61,096, at P 4 (October 28 Order), *further compliance order,* 133 FERC ¶ 61,185, at P 4 (2010) (November 30 Order); *B–R Pipeline Co.,* 128 FERC ¶ 61,126 (2009) (*B–R Pipeline*).

[54] In *B–R Pipeline,* 128 FERC ¶ 61,126 at P 6, the Commission stated that ''each time the Commission adopts new versions of [the] standards * * * pipelines must request waiver [or extension of time] of the new standards.''

[55] October 28 Order, 133 FERC ¶ 61,096 at P 9; November 30 Order, 133 FERC ¶ 61,185 at P 7.

[56] As an example, Standard 4.3.96 requires pipelines to provide hourly gas quality information ''to the extent that the TSP is required to do so in its tariff or general terms and conditions, a settlement agreement, or by order of an applicable regulatory authority.'' A pipeline that is not required to provide hourly gas quality information, therefore, does not require a waiver or extension of time for compliance with this standard, because the standard imposes no obligation on the pipeline to comply with the standard until it provides hourly gas quality information. *See* October 28 Order, 133 FERC ¶ 61,096 at P 9.

[57] *See* Order No. 587–U, FERC Stats. & Regs. ¶ 31,307 at PP 38–39.

[58] *See T.W. Phillips Pipeline Corp.,* 137 FERC ¶ 61,104, at P 11 (2011).

[59] *See Carolina Gas Transmission Corp.,* 131 FERC ¶ 61,211, at P 4 (2010); *MoGas Pipeline LLC,* 131 FERC ¶ 61,251, at P 7 (2010); *Granite State Gas Transmission, Inc.,* 132 FERC ¶ 61,262, at P 8 (2010) (requiring small pipelines to use manual methods of implementing index-based capacity releases).

[60] October 28 Order, 133 FERC ¶ 61,096 at PP 17–18; November 30 Order, 133 FERC ¶ 61,185 at P 9.

[61] October 28 Order, 133 FERC ¶ 61,096 at PP 17–18.

discussed in the Version 2.0 NOPR,[62] the Commission generally will grant waivers or extensions of time to comply with the EDI requirements based on a pipeline's individual circumstances, such as the size of the pipeline, the number of shippers, its ability to provide electronic services, the demand for such services, and alternative means by which the pipeline conducts the business practice. For smaller pipelines, the Commission generally grants waivers of the EDI Standards when such pipelines have shown that complying with such standards would prove unduly burdensome.[63] For larger pipelines on which shippers are not using a standard, in lieu of an outright waiver, the Commission generally will grant an extension of time until such time as a request is made to use EDI.[64] As with the EDI requirements relating to capacity releases,[65] NAESB also can review whether certain business transactions still need to be available through EDI, given the lack of usage, and pipelines can also seek such revisions from NAESB for EDI standards whose upkeep no is longer cost justified.

C. Comments on Implementation and Waiver Policy

40. MidAmerican filed the only comment on these policies. It argues that 60 days is too short a time period to comply with requests for EDI standards, and recommends that the Commission allow pipelines up to 90 days to comply with a shipper request to implement an EDI dataset not currently supported by the pipeline. MidAmerican argues that the that 90 days is a more reasonable amount of time for compliance, given the technological requirements of the NAESB WGQ EDI related data sets.[66]

41. The Commission cannot determine with certainty exactly how long it will take each pipeline to comply with each individual NAESB WGQ Version 2.0 Standard as this varies, depending on each pipeline's unique circumstances. The policy guidance we are giving in this Final Rule offers a reasonable general rule for meeting compliance obligations that balances both shippers' needs for the Business Practices and provides a reasonable amount of time for the pipelines to comply with the NAESB WGQ Standards. To the extent a pipeline's unique circumstances dictate that it requires additional time to implement a given NAESB WGQ Version 2.0 Standard, the pipeline may raise such issues in its compliance filing or in a request for waiver or extensions of time, so that its shippers will have an opportunity to intervene and raise any concerns with the pipeline's proposals.[67]

IV. Notice of Use of Voluntary Consensus Standards

42. In section 12(d) of NTT&AA, Congress affirmatively requires federal agencies to use technical standards developed by voluntary consensus standards organizations, like NAESB, as the means to carry out policy objectives or activities determined by the agencies unless use of such standards would be inconsistent with applicable law or otherwise impractical.[68] NAESB approved the standards under its consensus procedures. Office of Management and Budget Circular A–119 (§ 11) (February 10, 1998) provides that federal agencies should publish a request for comment in a NOPR when the agency is seeking to issue or revise a regulation proposing to adopt a voluntary consensus standard or a government-unique standard. On February 16, 2012, the Commission issued the Version 2.0 NOPR, which proposed to incorporate by reference NAESB's Version 2.0 Standards. The Commission has taken the comments on the Version 2.0 NOPR into account in fashioning this Final Rule.

V. Information Collection Statement

43. The Office of Management and Budget's (OMB) regulations require approval of certain information collection requirements imposed by agency rules. Upon approval of a collection(s) of information, OMB will assign an OMB control number and an expiration date. Respondents subject to the filing requirements of a rule will not be penalized for failing to respond to these collections of information unless the collections of information display a valid OMB control number.

44. This Final Rule amends the Commission's regulations at 18 CFR 284.12 to incorporate by reference the latest version (Version 2.0) of certain business practice standards adopted by NAESB's WGQ applicable to natural gas pipelines including Standards 0.3.19 and 0.3.21 as modified by the minor corrections and errata approved by NAESB. In this Final Rule, the Commission also provides guidance on the criteria the Commission will use in deciding whether to grant or deny requests for waivers or extensions of time and modifies the compliance filing requirements to add transparency as to where in the tariff incorporated standards may be found.

45. Under section 3507(d) of the Paperwork Reduction Act of 1995,[69] the reporting requirements in this rulemaking will be submitted to OMB for review. OMB elected to take no action on the Version 2.0 NOPR, and instead deferred its approval until review of the Final Rule.

46. The Commission solicited comments on the need for this information, whether the information will have practical utility, the accuracy of provided burden estimates, ways to enhance the quality, utility, and clarity of the information to be collected, and any suggested methods for minimizing the respondent's burden, including the use of automated information techniques. No comments were filed raising any objections to the burden estimate presented in the WGQ Version 2.0 NOPR. Accordingly, we will use that same burden estimate in this Final Rule.

Data collection	Number of respondents	Number of responses per respondent	Hours per response	Total number of hours
FERC–545[70]	161	1	10	1,610
FERC–549C[71]	161	1	22	3,542
Totals				5,152

[62] *See* Version 2.0 NOPR, FERC Stats. & Regs. ¶ 32,686 at P 27.

[63] *Id.*

[64] *See supra* n.60; *Texas Eastern Transmission LP.,* 100 FERC ¶ 61,364 (2002) (granting an extension of time for unused EDI datasets, but requiring compliance with datasets for publicly available capacity release information).

[65] *See* Version 2.0 NOPR, FERC Stats. & Regs. ¶ 32,686 at P 10.

[66] MidAmerican Comments at 2, 3.

[67] *See, e.g., WestGas InterState, Inc.,* 130 FERC ¶ 61,165, at P 4 (2010).

[68] *See supra* n.3.

[69] 44 U.S.C. 3507(d).

Total Annual Hours for Collections. (Reporting and Recordkeeping, If Appropriate) = 5,152.

Information Collection Costs: The Commission projects the average annualized cost of compliance with these regulations to be the following: [72]

	FERC–545	FERC–549C
Annualized Capital/Startup Costs	$94,990	$208,978
Annualized Costs (Operations & Maintenance)	N/A	N/A
Total Annualized Costs	94,990	208,978

Total Cost for all Respondents = $303,968.

47. OMB regulations [73] require OMB to approve certain information collection requirements imposed by agency rule. The Commission is submitting notification of this proposed rule to OMB. These information collections are mandatory requirements.

Title: FERC–545, Gas Pipeline Rates: Rates Change (Non-Formal); FERC–549C, Standards for Business Practices of Interstate Natural Gas Pipelines.

Action: Proposed collection.

OMB Control Nos.: 1902–0154, 1902–0174.

Respondents: Business or other for profit, (i.e., Natural Gas Pipelines, applicable to only a few small businesses.) Although the intraday reporting requirements will affect electric plant operators, the Commission is not imposing the reporting burden of adopting these standards on those entities.

Frequency of Responses: One-time implementation (business procedures, capital/start-up).

Necessity of Information: The requirements in this Final Rule will upgrade the Commission's current business practices and communication standards by specifically: (1) Adding and revising standards allowing the elimination of EDI requirements for Capacity Release Upload information; (2) creating and modifying existing information posting requirements for Web sites and browsers; (3) requiring pipelines to provide security information; (4) requiring the posting of information on waste heat recovery feasibility on the Internet; (5) modifying pipeline notice content and creating new pipeline notice types; and (6) creating standards to ensure NAESB data format is consistent with other data reporting via the Internet by using CSV.

The implementation of these data requirements will provide additional transparency to informational posting Web sites and will improve communication standards, including gas-electric communications. The implementation of these standards and regulations will promote the additional efficiency and reliability of the gas industry's operations thereby helping the Commission to carry out its responsibilities under the Natural Gas Act of promoting the efficiency and reliability of the gas industry's operations. In addition, the Commission's Office of Enforcement will use the data for general industry oversight.

Internal Review: The Commission has reviewed the requirements pertaining to business practices of natural gas pipelines and made a preliminary determination that the proposed revisions are necessary to establish more efficient coordination between the gas and electric industries. Requiring such information ensures both a common means of communication and common business practices to limit miscommunication for participants engaged in the sale of electric energy at wholesale and the transportation of natural gas. These requirements conform to the Commission's plan for efficient information collection, communication, and management within the natural gas pipeline industries. The Commission has assured itself, by means of its internal review, that there is specific, objective support for the burden estimates associated with the information requirements.

48. Interested persons may obtain information on the reporting requirements by contacting the Federal Energy Regulatory Commission, Office of the Executive Director, 888 First Street NE., Washington, DC 20426 [Attention: Ellen Brown, email: *DataClearance@ferc.gov,* phone: (202) 502–8663, fax: (202) 273–0873].

49. Comments concerning these information collections can be sent to the Office of Management and Budget, Office of Information and Regulatory Affairs [Attention: Desk Officer for the Federal Energy Regulatory Commission]. For security reasons, comments should be sent by email to OMB at the following email address: *oira_submission@omb.eop.gov.* Please reference FERC–545 and/or FERC 549C and the docket number of this Final Rule (Docket No. RM96–1–037) in your submission.

VI. Environmental Analysis

50. The Commission is required to prepare an Environmental Assessment or an Environmental Impact Statement for any action that may have a significant adverse effect on the human environment.[74] The actions taken here fall within categorical exclusions in the Commission's regulations for rules that are clarifying, corrective, or procedural, for information gathering, analysis, and dissemination, and for sales, exchange, and transportation of electric power that requires no construction of facilities.[75] Therefore, an environmental assessment is unnecessary and has not been prepared as part of this Final Rule.

VII. Regulatory Flexibility Act

51. The Regulatory Flexibility Act of 1980 (RFA) [76] generally requires a description and analysis of final rules that will have significant economic impact on a substantial number of small entities. The RFA mandates consideration of regulatory alternatives that accomplish the stated objectives of a proposed rule and that minimize any significant economic impact on a substantial number of small entities. The Small Business Administration's (SBA) Office of Size Standards develops

[70] Data collection FERC–545 covers rate change filings made by natural gas pipelines, including tariff changes (OMB Control No. 1902–0154).

[71] Data collection FERC–549C covers Standards for Business Practices of Interstate Natural Gas Pipelines (OMB Control No. 1902–0174).

[72] The total annualized cost for the two information collections is $303,968. This number is reached by multiplying the total hours to prepare a response (hours) by an hourly wage estimate of $59 (a composite estimate that includes legal, technical and support staff wages and benefits obtained from the Bureau of Labor Statistic data at *http://bls.gov/oes/current/naics3_221000.htm* and *http://www.bls.gov/news.release/ecec.nr0.htm* rates). $303,968 = $59 × 5,152.

[73] 5 CFR 1320.11.

[74] *Regulations Implementing the National Environmental Policy Act of 1969,* Order No. 486, 52 FR 47897 (Dec. 17, 1987), FERC Stats. & Regs. Regulations Preambles 1986–1990 ¶ 30,783 (1987).

[75] *See* 18 CFR 380.4(a)(2)(ii), 380.4(a)(5), 380.4(a)(27).

[76] 5 U.S.C. 601–612.

the numerical definition of a small business.[77] The SBA has established a size standard for pipelines transporting natural gas, stating that a firm is small if its annual receipts are less than $25.5 million.[78]

52. The standards being incorporated by reference in this final rule impose requirements only on interstate pipelines, the majority of which are not small businesses. Most companies regulated by the Commission do not fall within the RFA's definition of a small entity. Approximately 161 entities would be potential respondents subject to data collection FERC–545 reporting requirements and also be subject to data collection FERC 549–C reporting requirements. Nearly all of these entities are large entities. For the year 2010 (the most recent year for which information is available), only 10 entities not affiliated with larger companies had annual revenues of less than $25.5 million.[79]

53. The Commission estimates that the one-time implementation cost of these standards is $303,968, or $1,888 per company.[80] The Commission does not consider the estimated $1,888 impact per entity to be significant. As noted in the Final Rule, the Commission has adopted policies permitting small entities to request waivers or extensions of time with respect to the electronic processing requirements of these regulations. Moreover, the business practice standards are designed to benefit all customers, including small businesses.

54. Accordingly, pursuant to section 605(b) of the RFA,[81] the Commission certifies that the regulations being adopted here will not have a significant economic impact on a substantial number of small entities.

VIII. Document Availability

55. In addition to publishing the full text of this document in the **Federal Register**, the Commission provides all interested persons an opportunity to view and/or print the contents of this document via the Internet through FERC's Home Page (*http://www.ferc.gov*) and in FERC's Public Reference Room during normal business hours (8:30 a.m. to 5 p.m. Eastern time) at 888 First Street NE., Room 2A, Washington, DC 20426.

56. From FERC's Home Page on the Internet, this information is available on eLibrary. The full text of this document is available on eLibrary in PDF and Microsoft Word format for viewing, printing, and/or downloading. To access this document in eLibrary, type the docket number excluding the last three digits of this document in the docket number field.

57. User assistance is available for eLibrary and the FERC's Web site during normal business hours from FERC Online Support at (202) 502–6652 (toll free at 1–866–208–3676) or email at *ferconlinesupport@ferc.gov,* or the Public Reference Room at (202) 502–8371, TTY (202) 502–8659. Email the Public Reference Room at *public.referenceroom@ferc.gov.*

IX. Effective Date and Congressional Notification

58. These regulations are effective August 27, 2012. The Commission has determined (with the concurrence of the Administrator of the Office of Information and Regulatory Affairs of OMB) that this rule is not a ''major rule'' as defined in section 351 of the Small Business Regulatory Enforcement Fairness Act of 1996.

List of Subjects in 18 CFR Part 284

Incorporation by reference, Natural gas, Reporting and recordkeeping requirements.

By the Commission.

Nathaniel J. Davis, Sr.,

Deputy Secretary.

In consideration of the foregoing, the Commission amends Part 284, Chapter I, Title 18, *Code of Federal Regulations,* as follows.

PART 284—CERTAIN SALES AND TRANSPORTATION OF NATURAL GAS UNDER THE NATURAL GAS POLICY ACT OF 1978 AND RELATED AUTHORITIES

■ 1. The authority citation for part 284 continues to read as follows:

Authority: 15 U.S.C. 717–717z, 3301–3432; 42 U.S.C. 7101–7352; 43 U.S.C. 1331–1356.

■ 2. Section 284.12 is amended by revising paragraphs (a)(1)(1) through (vii) to read as follows:

§ 284.12 Standards for pipeline business operations and communications.

(a) * * *

(1) * * *

(i) Additional Standards (Version 2.0, November 30, 2010, with Minor Corrections Applied Through April 30, 2012);

(ii) Nominations Related Standards (Version 2.0, November 30, 2010, with Minor Corrections Applied Through December 2, 2011);

(iii) Flowing Gas Related Standards (Version 2.0, November 30, 2010, with Minor Corrections Applied Through June 3, 2011);

(iv) Invoicing Related Standards (Version 2.0, November 30, 2010, with Minor Corrections Applied Through June 3, 2011);

(v) Quadrant Electronic Delivery Mechanism Related Standards (Version 2.0, November 30, 2010, with Minor Corrections Applied Through December 2, 2011) with the exception of Standard 4.3.4;

(vi) Capacity Release Related Standards (Version 2.0, November 30, 2010, with Minor Corrections Applied Through January 5, 2012); and

(vii) Internet Electronic Transport Related Standards (Version 2.0, November 30, 2010, with Minor Corrections Applied Through January 2, 2011) with the exception of Standard 10.3.2.

* * * * *

Note: The following appendix will not appear in the Code of Federal Regulations.

APPENDIX—LIST OF COMMENTERS [1]

	Commenter	Short name or acronym
1	Spectra Energy Transmission, LLC, Spectra Energy Partners, LP, and their regulated pipelines and storage facilities	Spectra Entities.
2	North American Energy Standards Board [2]	NAESB.
3	Interstate Natural Gas Association [3]	INGAA.
4	North American Electric Reliability Corporation	NERC.
5	Southern Star Central Gas Pipeline, Inc.[4]	Southern Star.

[77] 13 CFR 121.101.

[78] 13 CFR 121.201, subsection 486.

[79] Our estimate of the number of small entities subject to this final rule differs from the tally in the Version 2.0 NOPR because the threshold for being deemed a small company recently has changed from less than $7 million to less than $25.5 million.

[80] This number is derived by dividing the total cost figure by the number of respondents. $303,968/161 = $1,888.

[81] 5 U.S.C. 605(b).

APPENDIX—LIST OF COMMENTERS [1]—Continued

Commenter	Short name or acronym
6 MidAmerican Energy Pipeline Group, including Kern River Gas Transmission Company and Northern Natural Gas Company.	MidAmerican.
7 American Gas Association [5]	AGA.

[1] In addition, the ISO/RTO Council submitted notice on March 23, 2012 that it might file comments in Docket No. AD12–12–000. It filed no substantive comments in this proceeding.
[2] NAESB followed up its March 23, 2012 comments with a pair of status reports. The first was filed on April 4, 2012 and the second was filed on May 4, 2012.
[3] INGAA also filed supplemental comments on June 4, 2012 supporting the incorporation of standards including NAESB's May 4, 2012 corrections.
[4] Southern Star also filed supplemental comments on June 4, 2012 supporting the incorporation of standards including NAESB's May 4, 2012 corrections.
[5] AGA's comments, like those of INGAA and Southern Star, supported the incorporation of standards including NAESB's May 4, 2012 corrections.

[FR Doc. 2012–18105 Filed 7–25–12; 8:45 am]
BILLING CODE 6717–01–P

DEPARTMENT OF LABOR

Mine Safety and Health Administration

30 CFR Part 75

RIN 1219–AB75

Examinations of Work Areas in Underground Coal Mines for Violations of Mandatory Health or Safety Standards

AGENCY: Mine Safety and Health Administration, Labor.

ACTION: Notice of OMB approval of information collection requirements.

SUMMARY: The Paperwork Reduction Act (PRA) requires this notice to set forth the effectiveness of information collection requirements contained in the final rule on Examinations of Work Areas in Underground Coal Mines for Violations of Mandatory Health or Safety Standards.

DATES: On July 17, 2012, the Office of Management and Budget (OMB) approved under the PRA the Department of Labor's information collection request for additional requirements in 30 CFR 75.360, 75.363, and 75.364 for the final rule published in the **Federal Register** on April 6, 2012 (77 FR 20700). The current expiration date for OMB authorization for this information collection is July 31, 2015. The effective date of the final rule is August 6, 2012.

FOR FURTHER INFORMATION CONTACT: George F. Triebsch, Director, Office of Standards, Regulations, and Variances, MSHA, 1100 Wilson Boulevard, Room 2350, Arlington, Virginia 22209–3939, *triebsch.george@dol.gov* (email), 202–693–9440 (voice), or 202–693–9441 (facsimile).

SUPPLEMENTARY INFORMATION: The Office of Management and Budget (OMB) has approved under the PRA information collection requirements in MSHA's final rule on Examinations of Work Areas in Underground Coal Mines for Violations of Mandatory Health or Safety Standards published in the **Federal Register** on April 6, 2012 (77 FR 20700). The final rule revised existing requirements for preshift, supplemental, on-shift, and weekly examinations of underground coal mines to require operators to identify violations of health or safety standards related to ventilation, methane, roof control, combustible materials, rock dust, other safeguards, and guarding, as listed in the final rule. The effective date of the final rule is August 6, 2012.

Under the PRA, an agency may not conduct an information collection unless it has a currently valid OMB approval. However, OMB had not provided a PRA-required approval for the revised information collection requirements contained in 30 CFR 75.360, 75.363, and 75.364 at the time the final rule was published (44 U.S.C. 3507(a)(2)). Therefore, in accordance with the PRA, the effective date of the additional information collection requirements in the revised standards was delayed until the OMB approved them (44 U.S.C. 3506(c)(1)(B)(iii)(V)).

On July 17, 2012, the OMB approved the Department's information collection request in the final rule under Control Number 1219–0088 under the PRA. The current expiration date for OMB authorization for this information collection is July 31, 2015.

Dated: July 20, 2012.

George F. Triebsch,

Certifying Officer.

[FR Doc. 2012–18205 Filed 7–25–12; 8:45 am]
BILLING CODE 4510–43–P

DEPARTMENT OF COMMERCE

National Oceanic and Atmospheric Administration

50 CFR Part 665

[Docket No. 120330236–2236–02]

RIN 0648–BB48

Western Pacific Pelagic Fisheries; Revised Swordfish Trip Limits in the Hawaii Deep-Set Longline Fishery

AGENCY: National Marine Fisheries Service (NMFS), National Oceanic and Atmospheric Administration (NOAA), Commerce.

ACTION: Final rule.

SUMMARY: NMFS publishes this final rule to revise the limits on the number of swordfish that fishermen may possess or land during any given Hawaii-based deep-set longline-fishing trip north of the Equator. This rule also revises the definition of deep-set longline fishing to be consistent with the swordfish retention limits. The rule intends to reduce regulatory discards and optimize the yield of swordfish.

DATES: This rule is effective August 27, 2012.

ADDRESSES: NMFS and the Western Pacific Fishery Management Council (Council) prepared a regulatory amendment, including an environmental assessment and regulatory impact review, that provides background information on this rule. The regulatory amendment, identified by identified by NOAA–NMFS–2012–0097, is available from *www.regulations.gov,* or from the Council, 1164 Bishop St., Suite 1400, Honolulu, HI 96813, tel 808–522–8220, fax 808–522–8226, *www.wpcouncil.org.*

FOR FURTHER INFORMATION CONTACT: Brett Wiedoff, Sustainable Fisheries, NMFS PIR, 808–944–2272.

SUPPLEMENTARY INFORMATION: Fishermen in the Hawaii-based deep-set longline fishery have been subject to a limit of 10 swordfish per fishing trip, a limit implemented to discourage shallow-set fishing during a declared deep-set fishing trip. The limit has occasionally forced fishermen to discard swordfish caught in excess of the limit. Fishermen have claimed that, because swordfish stocks are healthy and are not subject to overfishing or approaching an overfished condition, the discards amount to wasted opportunities to sell the excess swordfish, resulting in lost wages and a reduction of the fish supply to seafood consumers.

In response to fishermen's concerns, and based on a recommendation from the Council, NMFS revises the limits on the number of swordfish that may be possessed or landed during a deep-set longline fishing trip north of the Equator. The new limits are, as follows:

- With a NMFS observer on board, there is no limit on swordfish landed or possessed on a trip, regardless of the type of hook used.
- With no NMFS observer on board, the limit is 25 swordfish landed or possessed on a trip, if the vessel uses only circle hooks.
- With no NMFS observer on board, and if the vessel uses any hooks other than circle hooks, the limit is 10 swordfish landed or possessed on a trip.

This rule reduces regulatory discards, and optimizes swordfish yield. This rule supports the National Standards for fishery management in Magnuson-Stevens Fishery Conservation and Management Act, and maximizes the net benefits to the Nation.

This rule also revises the definition of deep-set longline fishing to remove the provision regarding swordfish limits from the definition. This change makes the definition consistent with the revised swordfish retention limits.

This rule is consistent with a final rule issued by NMFS on March 19, 2012 (77 FR 15973) that implemented similar limits on the possession and landing of swordfish for longline fishing off the U.S. west coast.

Comments and Responses

On June 11, 2012, NMFS published a proposed rule and request for public comment (77 FR 34331). The comment period for the proposed rule ended on July 2, 2012. NMFS received one set of comments that were supportive of the action for the reasons outlined in the preamble of the proposed rule. NMFS did not receive any negative comments on, or suggested changes to, the proposed rule.

Changes From the Proposed Rule

There are no changes to the proposed rule.

Classification

The Administrator, Pacific Islands Region, NMFS, determined that this action is necessary for the conservation and management of pelagic fisheries in the western Pacific, and that it is consistent with the Magnuson-Stevens Fishery Conservation and Management Act and other applicable laws.

The Chief Council for Regulation of the Department of Commerce certified to the Chief Council for Advocacy of the Small Business Administration during the proposed rule stage that this action would not have a significant economic impact on a substantial number of small entities. The factual basis for the certification was published in the proposed rule and is not repeated here. No comments were received regarding this certification. As a result, a regulatory flexibility analysis was not required and none was prepared.

This final rule has been determined to be not significant for purposes of Executive Order 12866.

List of Subjects in 50 CFR Part 665

Administrative practice and procedure, Fisheries, Fishing, Hawaii, Longline, Sea turtles, Swordfish.

Dated: July 20, 2012.

Alan D. Risenhoover,

Director, Office of Sustainable Fisheries, performing the functions and duties of the Deputy Assistant Administrator for Regulatory Programs, National Marine Fisheries Service.

For the reasons set out in the preamble, 50 CFR part 665 is amended as follows:

PART 665—FISHERIES IN THE WESTERN PACIFIC

■ 1. The authority citation for part 665 continues to read as follows:

Authority: 16 U.S.C. 1801 *et seq.*

■ 2. In § 665.800, revise the definition of ''*Deep-set or Deep-setting'' to read* as follows:

§ 665.800 Definitions.

* * * * *

Deep-set or Deep-setting means the deployment of longline gear in a manner consistent with all the following criteria: All float lines are at least 20 meters in length; a minimum of 15 branch lines are attached between any two floats (except basket-style longline gear which may have as few as 10 branch lines between any two floats); and no light sticks are used. As used in this definition, ''float line'' means a line used to suspend the main longline beneath a float, and ''light stick'' means any type of light emitting device, including any fluorescent ''glow bead,'' chemical, or electrically-powered light that is affixed underwater to the longline gear.

* * * * *

■ 3. In § 665.813, revise paragraph (j) to read as follows:

§ 665.813 Western Pacific longline fishing restrictions.

* * * * *

(j) *Swordfish limits.* When fishing north of the Equator (0° lat.), owners and operators of vessels registered for use under a Hawaii longline limited access permit, on a trip for which the permit holder notified NMFS under § 665.803(a) that the vessel would deep-set, may possess or land no more than the following number of swordfish for such trip:

(1) If an observer is on board, there is no limit.

(2) If there is no observer on board, and if only circle hooks are used, the limit is 25.

(3) If there is no observer on board, and if any type of hook other than a circle hook is used, the limit is 10.

* * * * *

[FR Doc. 2012–18298 Filed 7–25–12; 8:45 am]

BILLING CODE 3510–22–P

Proposed Rules

Federal Register
Vol. 77, No. 144
Thursday, July 26, 2012

This section of the FEDERAL REGISTER contains notices to the public of the proposed issuance of rules and regulations. The purpose of these notices is to give interested persons an opportunity to participate in the rule making prior to the adoption of the final rules.

DEPARTMENT OF AGRICULTURE

Rural Utilities Service

7 CFR Parts 1710, 1717, 1721, 1724, and 1730

RIN 0572–AC19

Energy Efficiency and Conservation Loan Program

AGENCY: Rural Utilities Service, USDA.

ACTION: Notice of proposed rulemaking.

SUMMARY: The Rural Utilities Service (RUS or Agency) is proposing policies and procedures for loan and guarantee financial assistance in support of energy efficiency programs (EE Programs) sponsored and implemented by electric utilities for the benefit of rural persons in their service territory. This notice of proposed rulemaking proposes changes to RUS regulations on General and Pre-Loan Policies and Procedures Common to Electric Loans and Guarantees. This regulation was finalized December 20, 1993. The notice of proposed rulemaking also proposes conforming amendments to additional RUS regulations. Under Section two of the Rural Electric Act, RUS is authorized to assist electric borrowers in implementing demand side management, energy efficiency and conservation programs, and on-grid and off-grid renewable energy systems. The scope of this proposed regulation falls within the authority of the Act.

DATES: Comments must be submitted on or before September 24, 2012.

ADDRESSES: Submit comments by either of the following methods: Federal eRulemaking Portal: Go to *http://www.regulations.gov.* Follow the instructions for submitting comments.

Postal Mail/Commercial Delivery: Please send your comments addressed to Michele Brooks, Director, Program Development and Regulatory Analysis, USDA Rural Development, 1400 Independence Avenue SW., STOP 1522, Room 5162, Washington, DC 20250–1522.

Other Information: Additional information about Rural Development and its programs is available on the Internet at *http://www.rurdev.usda.gov/index.html.*

FOR FURTHER INFORMATION CONTACT: Gerard Moore, USDA-Rural Utilities Service, 1400 Independence Avenue SW., Stop 1569, Washington, DC 20250–1569, telephone (202) 205–9692 or email to *gerard.moore@wdc.usda.gov.*

SUPPLEMENTARY INFORMATION:

Executive Summary: The Rural Utilities Service (RUS or Agency) is proposing policies and procedures for loan and guarantee financial assistance in support of energy efficiency programs (EE Programs) sponsored and implemented by electric utilities for the benefit of rural persons in their service territory. This notice of proposed rulemaking is designed to supplement the policies contained in 7 CFR part 1710, GENERAL AND PRE-LOAN POLICIES AND PROCEDURES COMMON TO ELECTRIC LOANS AND GUARANTEES, which were finalized in December 1993. Under Section 2(a) of the Rural Electrification Act of 1936 (7 U.S.C. 902(a)), the Secretary of Agriculture is explicitly ''authorized and empowered to make loans in the several States and Territories of the United States * * * for the purpose of assisting electric borrowers to implement demand side management, energy efficiency and conservation programs, and on-grid and off-grid renewable energy systems.'' As noted, Section 6101 of the 2008 Farm Bill inserted the words ''and energy efficiency'' into this provision. In order to implement this new focus of the program, RUS proposes to amend 7 CFR part 1710 by adding a new subpart H entitled ''Energy Efficiency and Conservation Loan Program.''

The goals of an eligible Energy Efficiency Program that could be funded under this program under this proposed subpart may include: (1) Increasing energy efficiency at the end user level, (2) modifying electric load such that there is a reduction in overall system demand, (3) effecting a more efficient use of existing electric distribution, transmission and generation facilities, (4) attracting new businesses and create jobs in rural communities by investing in energy efficiency, and (5) encouraging the use of renewable energy fuels for both demand side management and the reduction of conventional fossil fuel use within the service territory.

The Energy Efficiency and Conservation Loan Program may include loans supporting energy efficiency activities undertaken by the utility itself, the finance of energy efficiency projects undertaken by others and investments made by the utility to accomplish their obligations under utility energy services contracts.

Impacts

The new Subpart H. for the Energy Efficiency and Conservation Loan Program can have several economic impacts. The benefits include: (1) The value of purchased energy saved; (2) the value of corresponding avoided generation, transmission and/or distribution; (3) reserve investments as may be displaced or deferred by program activities; and (4) savings in energy bills.

The proposed loan program is estimated to have a maximum funding level of $250 million annually. The estimated administrative cost to the applicant and federal government are relatively low, at about $740,000 total for applicants, and about $1.7 million for the Federal government.

Executive Order 12866 and 13563

This proposed rule has been reviewed under Executive Order (EO) 12866, ''Regulatory Planning and Review,'' 58 FR 51735 (Oct. 4, 1993), and has been determined to be significant by the Office of Management and Budget. The EO defines a ''significant regulatory action'' as one that is likely to result in a rule that may: (1) Have an annual effect on the economy of $100 million or more or adversely affect, in a material way, the economy, a sector of the economy, productivity, competition, jobs, the environment, public health or safety, or State, local, or tribal governments or communities; (2) Create a serious inconsistency or otherwise interfere with an action taken or planned by another agency; (3) Materially alter the budgetary impact of entitlements, grants, user fees, or loan programs or the rights and obligations of recipients thereof; or (4) Raise novel legal or policy issues arising out of legal mandates, the President's priorities, or the principles set forth in this EO. As required by OMB circular A–4 the regulatory impact analysis will be

published along with this proposed rule on regulations.gov

The agency has also reviewed this regulation pursuant to Executive Order 13563, issued on January 18, 2011 (76 FR 3281, Jan. 21, 2011). EO 13563 is supplemental to and explicitly reaffirms the principles, structures, and definitions governing regulatory review established in Executive Order 12866. To the extent permitted by law, agencies are required by Executive Order 13563 to: (1) Propose or adopt a regulation only upon a reasoned determination that its benefits justify its costs (recognizing that some benefits and costs are difficult to quantify); (2) tailor regulations to impose the least burden on society, consistent with obtaining regulatory objectives, taking into account, among other things, and to the extent practicable, the costs of cumulative regulations; (3) select, in choosing among alternative regulatory approaches, those approaches that maximize net benefits (including potential economic, environmental, public health and safety, and other advantages; distributive impacts; and equity); (4) to the extent feasible, specify performance objectives, rather than specifying the behavior or manner of compliance that regulated entities must adopt; and (5) identify and assess available alternatives to direct regulation, including providing economic incentives to encourage the desired behavior, such as user fees or marketable permits, or providing information upon which choices can be made by the public.

The Agency conducted a benefit-cost analysis to fulfill the requirements of EO 12866 and 13563. In this analysis, the Agency identifies potential benefits and costs of the Energy Efficiency and Conservation Loan Program to borrowers, and RUS. The analysis contains quantitative estimates of the burden to the public and the Federal government and qualitative descriptions of the expected economic, environmental, and energy impacts associated with the Energy Efficiency and Conservation Loan Program.

Catalog of Federal Domestic Assistance

The program described by this proposed rule is an eligible purpose/subsidiary program of the Electrification Loans and Loan Guarantee program as listed in the Catalog of Federal Domestic Assistance Programs under number 10.850, Rural Electrification Loans and Loan Guarantees. The Catalog is available on the Internet at *http://www.cfda.gov.*

Executive Order 12372

This proposed rule is excluded from the scope of Executive Order 12372, Intergovernmental Consultation, which may require consultation with State and local officials. See the final rule related notice entitled, ''Department Programs and Activities Excluded from Executive Order 12372'' (50 FR 47034).

Paperwork Reduction Act of 1995

In accordance with the Paperwork Reduction Act of 1995 (44 U.S.C. chapter 35), comments are invited on this information collection for which the Agency has requested approval from the Office of Management and Budget (OMB).

Comments on this proposed rule must be received by September 24, 2012.

Comments are invited on (a) whether the collection of information is necessary for the proper performance of the functions of the Agency, including whether the information will have practical utility; (b) the accuracy of the Agency's estimate of burden including the validity of the methodology and assumption used; (c) ways to enhance the quality, utility and clarity of the information to be collected; and (d) ways to minimize the burden of the collection of information on those who are to respond, including through the use of appropriate automated, electronic, mechanical, or other technological collection techniques on other forms or information technology.

Comments may be sent to Michele Brooks, Director, Program Development and Regulatory Analysis, Rural Development, U.S. Department of Agriculture, 1400 Independence Avenue SW., Stop 1522, Room 5162 South Building, Washington, DC 20250.

Title: Energy Efficiency and Conservation Loan Program.

Type of Request: New information collection.

Abstract: The Agency manages loan programs in accordance with the Rural Electrification Act of 1936, 7 U.S.C. 901 *et seq.,* as amended (RE Act), which expressly provides for assisting electric borrowers in their implementation of demand side management (DSM), EE Programs and energy conservation programs. This proposed rulemaking expands upon the policies and procedures which are specific to loans for EE Programs. As a practical matter, energy efficiency investment includes the eligible purposes of DSM and energy conservation as well as investments resulting in the better management of existing loads or a reduction in investment needed for additional electric facilities.

The implementation of effective EE Programs by utilities also benefits rural America by creating jobs and these programs stimulate the economy by catalyzing material and equipment orders needed to implement the programs.

Title 7 CFR part 1710 General and Pre-loan Policies and Procedures Common to Electric Loans and Guarantees, subpart H, Energy Efficiency Programs, will provide for insured or guaranteed loans to new or existing borrowers for EE Programs undertaken by them in their service territory.

Estimate of Burden: Public reporting burden for this collection of information is estimated to average 8 hours per response.

Respondents: Not for profit organizations, business or other for profit.

Estimated Number of Respondents: 20.

Estimated Number of Responses per Respondent: 1.

Estimated Annual Responses: 20.

Estimated Total Annual Burden on Respondents: 160 hours.

Copies of this information collection can be obtained from Thomas P. Dickson, Program Development and Regulatory Analysis, USDA Rural Development, 1400 Independence Avenue SW., STOP 1522, Room 5164, Washington, DC 20250–1522. Telephone: 202–690–4492.

All responses to this information collection and recordkeeping notice will be summarized and included in the request for OMB approval. All comments will also become a matter of public record.

E-Government Act Compliance

The Agency is committed to the E-Government Act, which requires Government agencies in general to provide the public the option of submitting information or transacting business electronically to the maximum extent possible.

National Environmental Policy Act Certification

In accordance with the National Environmental Policy Act of 1969 (42 U.S.C. 4321 et seq.), the Agency will prepare a Programmatic Environmental Assessment (PEA) for this loan program activity as part of this rulemaking process. The PEA will be prepared pursuant to the National Environmental Policy Act of 1969 (NEPA) (42 U.S.C. 4321 et seq.), the Council on Environmental Quality's (CEQ) regulations for implementing NEPA (40 CFR parts 1500–1508), and RUS' NEPA

implementing regulations, Environmental Policies and Procedures (7 CFR part 1794). A notice will be published in the **Federal Register** announcing the availability of this PEA for public review. No obligations under this proposed new subpart will be processed until the Agency has made a determination of environmental finding for the actions contemplated in the proposed new subpart.

Regulatory Flexibility Act Certification

It has been determined the Regulatory Flexibility Act is not applicable to this rule since the RUS is not required by 5 U.S.C. 551 et seq. or any other provision of law to publish a notice of proposed rulemaking with respect to the subject matter of this rule.

Unfunded Mandates

This rule contains no Federal mandates (under the regulatory provisions of title II of the Unfunded Mandates Reform Act of 1995) for State, local, and tribal governments or for the private sector. Therefore, this rule is not subject to the requirements of section 202 and 205 of the Unfunded Mandates Reform Act of 1995.

Executive Order 12988

This proposed rule has been reviewed under Executive Order 12988, Civil Justice Reform. The Agency has determined that this proposed rule meets the applicable standards in § 3 of the Executive Order. In addition, all state and local laws and regulations that are in conflict with this rule will be preempted, no retroactive effort will be given to this rule, and, in accordance with section 212(e) of the Department of Agriculture Reorganization Act of 1994 (7 U.S.C. 6912(e)), administrative appeals procedures, if any, must be exhausted before any action against the Department or its agencies may be initiated.

Executive Order 13132, Federalism

The policies contained in this rule do not have any substantial direct effect on states and local governments, on the relationship between the national government and the states and locals, or on the distribution of power and responsibilities among the various levels of government. Nor does this rule impose substantial direct compliance costs on state and local governments. Therefore, consultation with the states is not required.

Executive Order 13175, Consultation and Coordination With Indian Tribal Governments

This executive order imposes requirements on Rural Development in the development of regulatory policies that have tribal implications or preempt tribal laws. Between October 2010 and January 2011, the United States Department of Agriculture (USDA) hosted seven regional regulation Tribal consultation sessions to gain input by elected Tribal officials or their designees concerning the impact of this rule on Tribal governments, communities, and individuals. These sessions established a baseline of consultation for future actions, should any be necessary, regarding this rule. As a result of the input received during these sessions, Rural Development has determined that the proposed rule does not have a substantial direct effect on one or more Indian tribe(s) or on either the relationship or the distribution of powers and responsibilities between the Federal Government and Indian tribes. Thus, this proposed rule is not subject to the requirements of Executive Order 13175. If a tribe determines that this rule has implications of which Rural Development is not aware and would like to engage in consultation with Rural Development on this rule, please contact Rural Development's Native American Coordinator at (720) 544–2911 or *AIAN@wdc.usda.gov*.

Background

RUS proposes to amend 7 CFR part 1710 by adding a new subpart H entitled ''Energy Efficiency and Conservation Loan Program''. Under Section 2(a) of the Rural Electrification Act of 1936 (7 U.S.C. 902(a)), the Secretary of Agriculture is explicitly ''authorized and empowered to make loans in the several States and Territories of the United States * * * for the purpose of assisting electric borrowers to implement demand side management, energy efficiency and conservation programs, and on-grid and off-grid renewable energy systems.'' As noted, Section 6101 of the 2008 Farm Bill inserted the words ''and energy efficiency'' into this provision which was originally added as an amendment to the RE Act by the Rural Electrification Loan Restructuring Act of 1993 (''RELRA'') (Pub. L. 103–129 sec. 2(c)(1)(B)).[1] Energy conservation was a part of the Agency's mission even before RELRA explicitly recognized this. In 1980, RUS developed an Energy Resources Conservation Program by issuing RUS Bulletin 20–23, Section 12 Extensions for Energy Resources Conservation Loans, dated December 8, 1980).[2] Commonly known as the ERC Loan Program, the Administrator used his broad discretion under the RE Act to employ Section 11 of the RE Act, authority to extend the time for payments as the foundation for creating the ''ERC Loan Program.'' RUS did not make ERC Loans directly. It operated the program by entering into agreements with its borrowers to defer amortization of their loans in order for the borrowers to fund energy conservation improvements. The electric cooperatives made loans to their members out of the cash flow resulting from the deferments they received from RUS on their own loans. Even though RUS did not make the ERC loans itself, it provided financial assistance to rural consumers by using the electric cooperatives as intermediaries. Congress subsequently amended Section 12 to expand it, first in 1990 to enable deferments to enable borrowers to provide financing to local businesses to stimulate rural economic development and again in 2008 to authorize energy efficiency and use audits and to install energy efficient measures or devices to reduce demand on electric systems. The recent grant of additional authority in Section 3 of the RE Act to make loans and guarantees for energy efficiency, as contrasted with authority to merely defer payments on direct loans, has become increasingly significant as percentage of the RUS portfolio represented by direct loans continues to amortize. In recent times the Agency delivers nearly all of its electric program assistance in the form of loan guarantees. As a guarantor, RUS does not have the same discretion to defer payments that it does when it is the lender. Consequently, RUS has determined that it is now necessary and appropriate to develop a loan program for this RE Act purpose.

''The REA Act, 7 U.S.C. 904, commits to the discretion of the Administrator the making of loans for rural electrification * * *.'' *Alabama Power Co.* v. *Ala. Elec. Coop.,* 394 F.2d 672 at 675 (CA 5) *cert. denied* 393 U.S. 1000

[1] Senator Patrick Leahy, as the Chairman of the Senate Committee on Agriculture, Nutrition and Forestry, explained this provision in a letter dated June 18, 1993 to Senator Jim Sasser, the Chairman of the Senate Committee on the Budget, as follows: ''These amendments also permit REA [RUS] to make loans for demand side management and energy conservation program[s] which are required by some state agencies. They are also often the most cost effective methods of meeting the energy needs of rural areas.''

[2] This Bulletin was rescinded in 2002 when RUS updated and codified the ERC Loan Program as 7 CFR Part 1721, subpart B. (See 67 FR 484, January 4, 2002).

(1968). ''REA is the administrative agency charged by Congress with responsibility for facilitating rural electrification. REA was intended by Congress to determine the appropriate course of conduct to accomplish the legislative purpose.'' *Public Utility District No. 1 of Franklin County* v. *Big Bend Electric Cooperative, Inc.,* 618 F.2d 601 at 603 (CA 9 1980). By broadly adding ''energy efficiency'' in the 2008 Farm Bill as a legislative purpose for the RE Act loans, Congress left it to the Administrator's discretion to fashion the appropriate method to accomplish this purpose. Drawing on more than three decades of experience in using electric cooperatives as local intermediaries to accomplish RE Act objectives at the consumer level, RUS is proposing to deliver this energy efficiency program drawing upon its favorable past successes with using its electric borrowers as intermediaries.

RUS anticipates that borrowers under this subpart will be generation and transmission (G&T) borrowers or their distribution members or unaffiliated distribution borrowers who are current on their loan payments and in compliance with their loan documents. RUS will only make loans for these purposes to electric utility systems. RUS also anticipates that the EE improvements installation work may be contracted by either the utility or the ultimate recipient, or performed directly by employees of the borrower, at the discretion of the utility designing the EE Program. In all cases, the Eligible Borrower is expected to hold title to the receivables funded by the RUS loan.

RUS is authorized by the RE Act to make loans to implement DSM, EE Programs and conservation programs, and on-grid and off-grid renewable energy systems. Energy Efficiency in this regulation can be defined as the degree a system or component performs its designated function with minimum consumption of resources. Renewable energy systems have a specific role in this regulation. Renewable generation can be used as load modifiers. Load modifiers can increase the efficiency of energy consumption from the utilities perspective and are highly effective at decreasing energy used by decreasing load during system peaks. Renewable energy and conservation savings associated with this regulation are from the utilities perspective, though the energy savings could be realized by both the consumer and utility, depending on the type of project, as the utility is the RUS borrower and is culpable for repayment of the loan. Energy efficiency as contemplated in this proposed regulation may, depending on the given project, accomplish either DSM, energy conservation, or both. The goals of an eligible EE Program under this proposed subpart may include one or more of the following: (1) To increase energy efficiency at the end user level, (2) to modify electric load such that there is a reduction in overall system demand, (3) to effect a more efficient use of existing electric distribution, transmission and generation facilities, and (4) to attract new businesses and create jobs in rural communities by investing in energy efficiency, and (5) to encourage the use of renewable energy fuels to accomplish either DSM or a reduction in the consumption of conventional fossil fuel within the service territory.

The primary differences between the existing energy resource conservation program codified in subpart B of 7 CFR part 1721 (ERC program) and the EE Program proposed in this rulemaking are: (1) The existing ERC program is limited to direct loan principal deferments and is not available for RUS guaranteed loans, (2) the list of eligible loan purposes for this proposed program is more expansive than for the ERC program and, where applicable, emphasizes that the assets in question must be characterized as an integral part of the Consumer's real property that would typically transfer with the title under applicable state law, and (3) the term of financing available under this proposed subpart is longer than the term allowed for principal deferments under the ERC loan program.

Rural electric cooperatives are proponents of energy efficiency measures. According to the National Rural Electric Cooperative Association, 73% of co-ops plan on significantly expanding existing efficiency programs in the next two years, 70% of co-ops offer financial incentives to promote greater energy efficiency, 96% of co-ops have some form of energy efficiency program in place, cooperatives are responsible for nearly 25% of residential peak load management capacity and cooperatives have 10% of retail electricity sales but are responsible for 20% of actual peak demand reduction. Representatives from rural electric cooperatives have commented that access to low interest funds can be the difference between success and failure for an energy efficiency program.

Eligible EE Programs may be comprised of a variety of activities, performed by either the utility or third parties. This proposed rule sets forth the policies and procedures related to eligible EE Programs where the RUS will finance: (1) Energy efficiency activities undertaken by the utility itself, (2) loans made by the utility to finance energy efficiency projects undertaken by others and (3) investments made by the utility to accomplish their obligations under utility energy services contracts. The types of activities that are eligible for RUS financing under this subpart include but are not limited to: (1) Residential and commercial energy audits, (2) community awareness and outreach programs, (3) services, materials and equipment provided by a qualified local contractor to improve energy efficiency at the Consumer level, and (4) energy efficiency loans made by the utility to its customers. RUS is considering allowing fuel switching as an eligible activity under this regulation. Fuel switching would not be designed to be a permanent change from one fuel to another, rather a method to handle peak loads during limited time periods. A description of EE Programs that would qualify for RUS financing may be found in the proposed § 1710.405. Eligible investments are listed in the proposed § 1710.406. Finally, eligible borrowers are defined in the proposed § 1710.404.

The term ''Energy efficiency'' is used in this part to refer to eligible load modification investments as well as traditional energy efficiency projects. A program to finance photovoltaic (solar) installations, for example, would typically be classified as distributed renewable generation, not energy efficiency. Distributed solar investments, however, including those made by individual Consumers, may also impact the load profile of the interconnected utility in a positive way, or facilitate demand side management, and they would be an eligible purpose for this program where any associated power flow from them into the grid is incidental. Small scale renewable energy systems that are constructed with the primary purpose of supplying energy to the grid would not be considered an energy efficiency investment under this loan program. Such small scale renewable energy systems may be financed under this Agency's traditional loan programs. The operative distinctions between eligible investments under this proposed subpart and the regular loan program are (1) these assets would ordinarily be on the customer side of the meter and (2) to the extent these assets deliver electricity to the grid, it will not exceed an incidental amount. This rulemaking proposes that the small scale renewable energy system investments financed on the Consumer side of the meter under

this program will be presumed to be incidental where the nameplate generation capacity is less than 50% of the average anticipated electrical load associated with the end user.

Some programs designed by utilities may have the utility initially owning an asset even though it is located on a Consumer's premise and the asset is later conveyed to the Consumer after it is paid for or a period of time has elapsed. Where this is the case, RUS is proposing that the application include an additional or revised Schedule C to the RUS mortgage listing these assets as Excepted Property under the RUS mortgage, so as to preclude the assets being captured under the after acquired clause that is standard in the RUS mortgage codified in 7 CFR part 1718. It is the intent of RUS that a release of lien need not be executed by the Agency for the utility to convey to the Consumer clear title to these assets when this Schedule C is recorded.

This proposed rulemaking recognizes that energy may take a variety of forms, not just electricity. The criteria to be met by eligible programs include energy efficiency as measured by Btu [3] input relative to Btu output, in order to facilitate the widest and greatest contribution by the rural utility in optimizing the energy consumption profile of its service territory. The proposed rulemaking also provides that an eligible program must demonstrate that the financial strength of the electric utility is not harmed by EE Program activities funded under this proposed new subpart.

An important distinction between eligible energy efficiency assets to be financed under this new subpart H and other energy efficiency activities is that the assets located at a Consumer's premises, whether or not title is to be held by the utility must, for the most part, be considered an integral part of the real property that would typically transfer with the title under applicable State law (a specified exception relates to lighting) in order to be financed pursuant to an eligible program under this proposed rulemaking.

Eligible programs may provide that the utility will recoup all or part of the costs from specific ratepayers on whose behalf an investment has been made. Recoupment may take the form of Consumer loan repayment or a dedicated tariff. An eligible program under this part must show that the payment terms and loan term offered to the Consumer are generally correlated with the expected life of the applicable assets. An eligible program must also offer an undertaking that funds collected from ratepayers in excess of the current amortization requirements for the RUS loan will be redeployed for EE Program purposes or used to prepay the RUS loan. These prepayments would be in addition to scheduled principal and interest debt service payments.

Applications for program financings under this subpart must fully describe a Business Plan that meets the requirements of § 1710.407.

The Agency recognizes that energy efficiency investments that reduce energy consumption at the Consumer premises (for instance those that affect the power factor) may prompt a need for investments at the system level to sustain the reliability and stability of the grid. The business plan called for in this proposed rulemaking must identify the related system investment to be identified as part of the EE Program, but these system level investments would be reflected in the utility's construction work plan and financed as part of a traditional loan application.

It is not required that an eligible program fund energy audits performed at Consumer premises. However, if the utility proposes to provide audits the rulemaking proposes that the program must also include a provision for assisting Consumers in implementing changes suggested by the audit in those cases where the recommended investments are expected to achieve minimum performance objectives. A program that funds energy audits without providing assistance for implementing audit recommendations included in the audit would not be an eligible program and only those activities that meet minimum performance objectives are eligible to be funded under this program. Only those audit recommendations that taken together will achieve an overall reduction in annualized energy consumption at a specific premise of at least 10% may be financed with RUS loan funds under this subpart.

The list of eligible investments and activities that a qualified plan may incorporate is not intended to be exhaustive. The intent is to facilitate flexibility for the utility's EE Program consistent with the resources and Consumer profiles in its service territory.

Performance thresholds have been established in this regulation. The objective of these thresholds is to ensure a minimum increase in energy efficiency for a given system. This approach also ensures that any energy efficiency upgrades will not be marginal. These thresholds appear as percent increases in system efficiency. At this time there are no standards to apply to each of these systems.

This proposed lending program is designed for utility-designed and directed EE Programs. As such it anticipates that eligible loan purposes will include program administrative and other soft costs, such as marketing expenses, where not more than four percent of the loan budget may be used for these purposes. A utility's program may include acting as an intermediary lender, where the utility uses RUS financing to make Consumer loans to finance these investments on the Consumers' premises. Where this is the case, this rulemaking proposes to cap the interest rate at one percent that the utility can charge.

The process for applying for EE Program loans is intended to largely conform to the Agency's existing process for loans relating to other eligible purposes. Accordingly, the requirements discussed throughout 7 CFR part 1710 are proposed to apply equally to EE Program loans unless otherwise stated after giving effect to the proposed conforming amendments incorporated in this rulemaking. Expenditures by the utility will be reimbursed by the Agency after the fact pursuant to an inventory of work orders system as is typical for our existing loan process. The analytical material needed to support an EE Program loan is different from what is needed to analyze a generation or transmission loan. Accordingly, the proposed subpart H elaborates on what is needed for RUS to approve an EE Program and loans to execute the program. EE Program activity will be captured under a separate energy efficiency work plan. Energy efficiency investments will not be listed on the traditional construction work plan that applies to utility assets financed by RUS.

As with other loans made pursuant to 7 CFR part 1710, a borrower's Environmental Report (ER) is expected to accompany the energy efficiency work plan associated with the loan request. The ER is in accordance with 7 CFR 1794. This Part contains the policies and procedures of the Rural Utilities Service for implementing the requirements of the National Environmental Policy Act. In the case of an EE Program loan, this ER will be expected to reference the PEA as completed by the Agency for EE Program loans, and identify any investments that are proposed in the work plan that were not captured in the PEA.

This new subpart H is not intended to be duplicative of requirements

[3] British Thermal Unit.

otherwise prescribed in part 1710, but rather, adaptive. It identifies requirements that are unique to loans made under the proposed subpart H to finance EE Programs. It addresses federal requirements that arise when our direct borrower acts as an intermediary lender to accomplish the investments outlined in an approved EE program. Where there is an express conflict with requirements elsewhere in part 1710, the provisions of the proposed subpart H would apply, but otherwise this proposed subpart H is not intended to supplant the applicability of the rest of part 1710 or other applicable parts in the Code of Federal Regulations.

Subpart H, as required with for all of 1710, will work with DOE, following the requirements set of by the Rural Electrification Act of 1936, Section 16 that states: ''the Secretary in making or guaranteeing loans for the construction, operations, or enlargement of generating plants or electric transmission lines or systems shall consider such general criteria consistent with the provisions of this Act as may be published by the Secretary of Energy.''

Comments Are Specifically Invited on the Following Questions

1. What should be the threshold for determining when small scale renewable energy systems on the Consumer side of the meter is presumed incidental and thereby qualify for reimbursement under this program?

2. What is the appropriate markup above the Treasury-based interest rate paid to RUS that the utility should be allowed to add to cover its administrative costs in the interest rate it establishes for Consumer loans funded under this proposed subpart?

3. What is the appropriate performance thresholds that should be set to ensure products purchased with loan funds are significantly more energy efficient than conventional products, have reasonable payback periods, and perform at least as well as conventional products? Are the percentage energy efficiency improvements for specific projects appropriate measures for this program's energy efficiency standards? Should this rule reference existing energy efficiency standards or criteria such as those from ENERGY STAR, FEMP, ANSI, or other voluntary consensus standards as a means of ensuring products purchased with loan funds are significantly more energy efficiency than conventional products?

4. Should fuel switching be an eligible activity under this programmatic regulation? Should the agency consider any net increases in conventional fossil fuel consumption or emissions due to fuel switching even though the utility's electrical load may be reduced during peak periods? Would limiting fuel switching projects to 50% of the average anticipated electrical load associated with the end user, adequately address any concerns with potential emissions or overall energy generation increases?

5. RUS requests comment on the one percent cap on interest rates that utilities may charge under this program, where the utility uses RUS financing to make Consumer loans to finance these investments on the Consumers' premises. RUS also requests comment on the four percent limit of the loan budget that may be used on administration and other soft costs, such as marketing expenses.

6. RUS requests comment on the appropriate funding cap for this program. Should it be $250 million?

List of Subjects

7 CFR Part 1710

Electric power, Loan programs—energy, Reporting and recordkeeping requirements, Rural areas.

7 CFR Part 1717

Administrative practice and procedure, Electric power, Electric power rates, Electric utilities, Intergovernmental relations, Investments, Loan programs—energy, Reporting and recordkeeping requirements, Rural areas.

7 CFR Part 1721

Electric power, Loan programs energy, Rural areas.

7 CFR Part 1724

Electric power, Loan programs—energy, Reporting and recordkeeping requirements, Rural areas.

7 CFR Part 1730

Electric power, Loan programs—energy, Reporting and recordkeeping requirements, Rural areas.

For reasons set forth in the preamble, the Agency proposes to amend 7 CFR chapter XVII as follows:

PART 1710—GENERAL AND PRE-LOAN POLICIES AND PROCEDURES COMMON TO ELECTRIC LOANS AND GUARANTEES

1. The authority citation for part 1710 continues to read as follows:

Authority: 7 U.S.C. 901 *et seq.,* 1921 *et seq.,* 6941 *et seq.*

Subpart A—General

2. In § 1710.2(a) revise the definition of ''Demand side management'' and add a new definition of ''Eligible Energy Efficiency Programs'' in alphabetical order to read as follows:

§ 1710.2 Definitions and rules of construction.

(a) * * *

Demand side management (DSM) means the deliberate planning and/or implementation of activities to influence Consumer use of electricity provided by a distribution borrower to produce beneficial modifications to the system load profile. Beneficial modifications to the system load profile ordinarily improve load factor or otherwise help in utilizing electric system resources to best advantage consistent with acceptable standards of service and lowest system cost. Load profile modifications are characterized as peak clipping, valley filling, load shifting, strategic conservation, strategic load growth, and flexible load profile. (See, for example, publications of the Electric Power Research Institute (EPRI), 3412 Hillview Avenue, Palo Alto, CA 94304, especially ''Demand-Side Management Glossary'' EPRI TR–101158, Project 1940–25, Final Report, October 1992.) DSM includes energy conservation programs. It does not include sources of electrical energy such as renewable energy systems unless the power flow into the grid from such an interconnected resource is incidental to the operation of the source. A small scale renewable energy source with a nameplate capacity 50 percent or less than the average anticipated load of the associated end user(s) is presumed to be incidental.

* * * * *

Eligible Energy Efficiency and Conservation Programs (Eligible EE Program) means an energy efficiency and conservation program that meets the requirements of subpart H of this part.

* * * * *

Subpart C—Loan Purposes and Basic Policies

§ 1710.100 [Amended]

3. In § 1710.100, amend the first sentence by adding the words ''efficiency and'' before ''energy conservation.''

§ 1710.101 [Amended]

4. In § 1710.101, amend the second sentence of paragraph (b) by adding the word ''direct'' before ''loans to individual Consumers.''

§ 1710.102 [Amended]

5. Amend § 1710.102 as follows:

a. Amend the first sentence of paragraph (a) of by adding ''energy

efficiency and'' before ''energy conservation.''

b. Amend the first sentence of paragraph (b) by adding ''energy efficiency and'' before ''energy conservation.''

6. Amend § 1710.106 by adding a new paragraph (a)(6), and revising paragraphs (c)(1) and (d) to read as follows:

§ 1710.106 Uses of loan funds.

(a) * * *

(6) Eligible Energy Efficiency and Conservation Programs pursuant to subpart H of this part.

* * * * *

(c) * * *

(1) Electric facilities, equipment, appliances, or wiring located inside the premises of the Consumer, except for assets financed pursuant to an Eligible EE Program, and qualifying items included in a loan for demand side management or energy resource conservation programs, or small scale renewable energy systems.

* * * * *

(d) A distribution borrower may request a loan period of up to 4 years. Except in the case of loans for new generating and associated transmission facilities, a power supply borrower may request a loan period of not more than 4 years for transmission and substation facilities and improvements or replacements of generation facilities. The loan period for new generating facilities and DSM activities will be determined on a case by case basis. The Administrator may approve a loan period shorter than the period requested by the borrower, if in the Administrator's sole discretion, a loan made for the longer period would fail to meet RUS requirements for loan feasibility and loan security set forth in §§ 1710.112 and 1710.113, respectively.

* * * * *

§ 1710.109 [Amended]

7. In § 1710.109 amend the first sentence of paragraph (a) by adding the words ''energy efficiency and conservation program work plan,'' after ''construction work plan.''

8. Amend § 1710.115 by adding a new paragraph (c) to read as follows:

§ 1710.115 Final maturity.

* * * * *

(c) The term for loans made to finance Eligible EE Programs will be determined in accordance with § 1710.408 of this part.

* * * * *

§ 1710.120 [Amended]

9. In § 1710.120 add the words ''energy efficiency and conservation program work plans,'' after ''construction work plans,''

Subpart D—Basic Requirements for Loan Approval

10. Amend § 1710.152 by adding a new paragraph (e) to read as follows:

§ 1710.152 Primary support documents.

* * * * *

(e) *EE Program work plan (EEPWP).* In the case of a loan application to finance an Eligible Energy Efficient Program, an EE Program work plan shall be prepared in lieu of a traditional CWP required pursuant to paragraph (b) of this section. The requirements for an EEPWP are set forth in § 1710.255 and in subpart H of this part.

Subpart E—Load Forecasts

11. Amend § 1710.202 by adding a new paragraph (d) to read as follows:

§ 1710.202 Requirement to prepare a load forecast—power supply borrowers.

* * * * *

(d) Notwithstanding paragraphs (a) through (c) of this section, a power supply borrower that has an outstanding loan for an Eligible EE Program is required to maintain an approved load forecast and an approved load forecast work plan on an ongoing basis.

12. Amend § 1710.203 by adding a new paragraph (f) to read as follows:

§ 1710.203 Requirement to prepare a load forecast—distribution borrowers.

* * * * *

(f) Notwithstanding paragraphs (a) through (e) of this section, a distribution borrower that has an outstanding loan for an Eligible EE Program is required to maintain an approved load forecast and an approved load forecast work plan on an ongoing basis.

§ 1710.205 [Amended]

13. In § 1710.205 amend paragraph (b)(5) by adding the words ''and energy efficiency and conservation program'' after ''demand side management''.

Subpart F—Construction Work Plans and Related Studies

14. Add § 1710.255 to subpart F to read as follows:

§ 1710.255 Energy efficiency work plans—energy efficiency borrowers.

(a) All energy efficiency borrowers must maintain a current EEWP approved by their board of directors covering all new construction, improvements, replacements, and retirements of energy efficiency related equipment and activities;

(b) An energy efficiency borrower's EEWP shall cover a period of between 2 and 4 years, and include all facilities to be constructed or improved which are eligible for RUS financing, whether or not RUS financial assistance will be sought or be available for certain facilities. The term for any RUS financing provided for the facilities may be up to 30 years for ground source heat pump systems and up to 15 years for all other energy efficiency improvements and installations. The construction period covered by an EEWP in support of a loan application shall not be shorter than the loan period requested for financing of the facilities;

(c) The borrower's EEWP may only include facilities, equipment and other activities that have been approved by RUS as a part of an Eligible Energy Efficiency and Conservation Program pursuant to subpart H of this part;

(d) The borrower's EEWP must be consistent with the documentation provided as part of the current RUS approved EE Program as outlined in § 1710.410(c); and

(e) The borrower's EEWP must include an estimated schedule for the implementation of included projects.

Subpart G—Long Range Financial Forecasts

15. Amend § 1710.300 by redesignating paragraphs (d)(3) through (d)(5) as paragraphs (d)(4) through (d)(6) respectively; and adding a new paragraph (d)(3) to read as follows:

§ 1710.300 General.

* * * * *

(d) * * *

(3) RUS-approved EE Program work plan;

* * * * *

§ 1710.302 [Amended]

16. In § 1710.302 amend paragraph (d)(5) by removing the reference ''§ 1710.300(d)(5)'' and adding in its place ''§ 1710.300(d)(6)''.

Subpart I—Application Requirements and Procedures for Loans

17a. In subpart I, redesignate §§ 1710.400 through 1710.407 as §§ 1710.500 through 1710.507, respectively.

17b. Add subpart H consisting of §§ 1710.400 through 1710.499, to read as follows:

Subpart H—Energy Efficiency and Conservation Loan Program

Sec.

1710.400 Purpose.

1710.401 RUS Policy.
1710.402 Scope.
1710.403 General.
1710.404 Definitions.
1710.405 Eligible energy efficiency and conservation programs.
1710.406 Eligible activities and investments.
1710.407 Business plan.
1710.408 Quality assurance plan.
1710.409 Loan provisions.
1710.410 Application documents.
1710.411 Analytical support documentation.
1710.412 Borrower accounting methods, management reporting and audits
1710.413 Compliance with other laws and regulations.
1710.414–1710.499 [Reserved]

Subpart H—Energy Efficiency and Conservation Loan Program

§ 1710.400 Purpose.

This subpart establishes policies and requirements that apply to loans and loan guarantees to finance Energy Efficiency and Conservation programs (EE Programs) undertaken by an eligible utility system to finance demand side management, energy efficiency and conservation, or on-grid and off-grid renewable energy system programs that will result in the better management of their system load growth, a more beneficial load profile, or greater optimization of the use of alternative energy resources in their service territory.

§ 1710.401 RUS policy.

EE Programs under this part may be financed at the distribution level or by an electric generation and transmission provider. RUS encourages borrowers to coordinate with the relevant member systems regarding their intention to implement a program financed under this part. RUS also encourages borrowers to leverage funds available under this subpart with State, local, or other funding sources that may be available to implement such programs.

§ 1710.402 Scope.

This subpart adapts and modifies, but does not supplant, the requirements for all borrowers set forth elsewhere where the purpose of the loan is to finance an approved EE program. In the event there is overlap or conflict between this subpart and the provisions of this part 1710 or other parts of the Code of Federal Regulations, the provisions of this subpart will apply for loans made or guaranteed pursuant to this subpart.

§ 1710.403 General.

EE Programs financed under this subpart may be directed at all forms of energy consumed within a utility's service territory, not just electricity, where the electric utility is in a position to facilitate the optimization of the energy consumption profile within its service territory and do so in a way that enhances the financial or physical performance of the rural electric system and enables the repayment of the energy efficiency loan.

§ 1710.404 Definitions.

For the purpose of this subpart, the following terms shall have the following meanings. In the event there is overlap or conflict between the definitions contained in § 1710.2, the definitions set forth below will apply for loans made or guaranteed pursuant to this subpart.

British thermal unit (Btu) means the quantity of heat required to raise one pound of water one degree Fahrenheit.

Cost effective means the cost of an EE Program is less than the financial benefit of the program over time. The cost of a program for this purposes shall include the costs of incentives, measurement and verification activity and administrative costs, and the benefits shall include the value of energy saved, the value of corresponding avoided generation, transmission or distribution and reserve investments as may be displaced or deferred by program activities.

Demand means the electrical load averaged over a specified interval of time. Demand is expressed in kilowatts, kilovolt amperes, kilovars, amperes, or other suitable units. The interval of time is generally 15 minutes, 30 minutes, or 60 minutes.

Demand savings means the quantifiable reduction in the load requirement for electric power, usually expressed in kilowatts (kW) or megawatts (MW) such that it reduces the cost to serve the load.

Eligible borrower means a utility system that has direct or indirect responsibility for providing retail electric service to persons in a rural area.

Energy audit means an inspection and analysis of energy flows in a building, process, or system with the goal of identifying opportunities to enhance energy efficiency. The activity should result in an objective standard- based technical report containing recommendations for improving the energy efficiency. The report should also include a cost benefit analysis reflecting the estimated benefits and costs of pursuing each recommendation.

Energy efficiency and conservation measures means equipment, materials and practices that when installed and used at a Consumer's premise result in a verifiable reduction in energy consumption, measured in Btus, or demand as measured in Btu-hours, or both, at the point of purchase relative to a base level of output. The ultimate goal is the reduction of utility energy needs.

Energy efficiency and Conservation program (EE Program) means a program of activities undertaken or financed by a utility within its service territory to reduce the amount or rate of energy used by Consumers relative to a base level of output.

HVAC means heating, ventilation, and air conditioning.

Load means the Power delivered to power utilization equipment performing its normal function.

Load factor means the ratio of the average load over a designated period of time to the peak load occurring in the same period.

Net Utility Plant means Total Utility Plant net of accumulated depreciation.

Peak demand (or maximum demand) means the highest demand measured over a selected period of time, e.g., one month.

Peak demand reduction means a decrease in electrical demand on an electric utility system during the system's peak period, calculated as the reduction in maximum average demand achieved over a specified interval of time.

Power means the rate of generating, transferring, or using energy. The basic unit is the watt, where one Watt is approximately 3.41213 Btu/hr.

Re-lamping means the initial conversion of bulbs or light fixtures to more efficient lighting technology but not the replacement of like kind bulbs or fixtures after the initial conversion.

Seasonal Energy Efficiency Rating (SEER) means the commonly used measure of efficiency of Consumer central air conditioners and heat pumps. It is the ratio of cooling output divided by electric energy input (Btu/Wh).

SI means the International System of Units: the modern metric system.

Smart Grid Investments means capital expenditures for devices or systems that are capable of providing real time, two way (utility and Consumer) information and control protocols for individual Consumer owned or operated appliances and equipment, usually through a Consumer interface or smart meter.

Ultimate Recipient means a Consumer that receives a loan from a borrower under this subpart.

Utility Energy Services Contract (UESC) means a contract whereby a utility provides a Consumer with comprehensive energy efficiency improvement services or demand reduction services.

Utility System means an entity in the business of providing retail electric service to Consumers (distribution entity) or an entity in the business of providing wholesale electric supply to distribution entities (generation entity) or an entity in the business of providing transmission service to distribution or generation entities (transmission entity), where, in each case, the entities provide the applicable service using self-owned or controlled assets under a published tariff that the entity and any associated regulatory agency may adjust.

Watt means the SI unit of power equal to a rate of energy transfer (or the rate at which work is done), of one joule per second.

§ 1710.405 Eligible energy efficiency and conservation programs.

(a) *General.* Eligible EE Programs shall:

(1) Be developed and implemented by an Eligible borrower and applied within its service territory;

(2) Consist of eligible activities and investments as provided in § 1710.406

(3) Provide for the use of State and local funds where available to supplement RUS loan funds;

(4) Incorporate the applicant's policy applicable to the interconnection of distributed resources;

(5) Incorporate a business plan that meets the requirements of § 1710.407;

(6) Incorporate a quality assurance plan that meets the requirements of § 1710.408;

(7) Demonstrate that the program can be expected to be Cost effective;

(8) Demonstrate that the program will have no net negative cumulative impact on the borrower's financial condition over the time period contemplated in the analytical support documents provided pursuant to § 1710.411;

(9) Demonstrate energy savings or peak demand reduction for the service territory overall; and

(10) Be approved in writing by RUS prior to the investment of funds for which reimbursement will be requested.

(b) *Financial Structures.* Eligible EE Programs may provide for direct recoupment of expenditures for eligible activities and investment from Consumers as follows:

(1) Loans made to Consumers located in a rural area where—

(i) The Consumers may be wholesale or retail;

(ii) The loans may be secured or unsecured;

(iii) The loan receivables are owned by the Eligible Borrower;

(iv) The loans are made or serviced directly by the Eligible Borrower or by a financial institution pursuant to a contractual relationship between the Eligible Borrower and the financial institution;

(v) Due diligence is performed to confirm the repayment ability of the Consumer;

(vi) Loans are funded only upon completion of the project financed or to reimburse startup costs that have been incurred;

(vii) The rate charged the Consumer is less than or equal to the direct Treasury rate established daily by the United States Treasury pursuant to § 1710.51(a)(1) or § 1710.52, as applicable, plus 1%, as of the date the Consumer loan is approved; and

(viii) Loans are not used to refinance a preexisting loan.

(2) A tariff that is specific to an identified rural Consumer, premise or class of ratepayer; or

(3) Other financial recoupment mechanisms as may be approved by RUS.

(c) *Period of Performance*—(1) *Performance Thresholds.* (i) Eligible EE Programs activities that are listed under § 1710.406(b) should be designed to achieve the applicable operating performance thresholds within one year of the date of installation of the facilities.

(ii) All activities other than those included in subparagraph (c)(1)(i) above should be designed to achieve the applicable operating performance targets within the time period contemplated by the analytic support documents for the overall EE Program as approved by RUS.

(2) *Cost effectiveness.* Eligible EE Programs must demonstrate that Cost effectiveness as measured for the program overall will be achieved within five years of initial funding.

§ 1710.406 Eligible activities and investments.

(a) *General.* Eligible program activities and investments:

(1) Shall be designed to improve energy efficiency or managed demand on the customer side of the meter;

(2) Shall be Cost effective in the aggregate after giving effect to all activities and investments contemplated in the approved EE Program; and

(3) May apply to all Consumer classes.

(b) *Eligible activities and investments.* Eligible program activities and investments may include, but are not limited to, the following:

(1) Energy efficiency and conservation measures where assets financed at a Consumer premises can be characterized as an integral part of the real property that would typically transfer with the title under applicable state law.

(2) Small Scale Renewable Energy Systems, including—

(i) On or Off Grid Renewable energy systems;

(ii) Fuel cells;

(3) Demand side management (DSM) investments excluding Smart Grid Investments;

(4) Energy audits;

(5) Utility Energy Services Contracts;

(6) Consumer education and outreach programs;

(7) Power factor correction equipment on the Consumer side of the meter;

(8) Re-lamping to more energy efficient lighting; and

(9) Other activities and investments as approved by RUS as part of the EE Program

(c) *Intermediary lending.* EE Program loan funds may be used for direct re-lending to Consumers where the requirements of § 1710.405(b) are met

(d) *Performance thresholds.*

(1) *Energy efficiency and conservation measures:*

(i) Appliance upgrades must achieve a reduction in energy consumption for the appliance equal to or greater than 20%;

(ii) Cooling system improvements must be designed to achieve a SEER increase of not less than 20%, and the improved SEER rating must be greater than or equal to the minimum applicable SEER standard promulgated by the U.S. Department of Energy for the cooling system;

(iii) Building envelope improvements must be designed to achieve a reduction of annualized baseline energy consumption (measured in Btus) greater than 10% for the building;

(2) *Energy audit recommendations.* Only those recommendations that taken together will achieve an overall reduction in annualized energy consumption of at least 10% at the Consumer premises covered by the audit may be financed with RUS loan funds under this subpart.

(3) Heating system improvements must demonstrate an annualized energy reduction in Btu consumption equal to or greater than 20%.

(4) Activities not otherwise listed in this paragraph (d) must demonstrate energy savings which will be determined on a case by case basis by RUS, but in any event not less than a 10% improvement in energy efficiency.

(e) The borrowers shall follow a bulletin or such other publication as RUS deems appropriate that contains and describes best practices for energy efficiency and conservation measures associated with different technologies. RUS will make this bulletin or publication publicly available and

revise it from time to time as RUS deems it necessary.

§ 1710.407 Business plan.

An Eligible EE Program must have a business plan for implementing the program. The business plan must have the following elements:

(a) Executive summary. The executive summary shall capture the overall objectives to be met by the Eligible EE Program and the timeframe in which they are expected to be achieved.

(b) Organizational background. The background section shall include descriptions of the management team responsible for implementing the Eligible EE Program.

(c) Marketing plan. The marketing section should identify the target Consumers, promotional activities to be pursued and target penetration rates by Consumer category and investment activity.

(d) Operations plan. The operations plan shall include but is not limited to:

(1) A list of the activities and investments to be implemented under the EE Program and the Btu savings goal targeted for each category;

(2) An estimate of the dollar amount of investment by the utility for each category of activities and investments listed under paragraph (d)(1) of this section;

(3) A staffing plan that identifies whether and how outsourced contractors or subcontractors will be used to deliver the program;

(4) A description of the process for documenting and perfecting collateral arrangements for Consumer loans, if applicable; and

(5) The overall Btu savings to be accomplished over the life of the EE Program.

(e) Financial Plan. The financial plan shall include but is not limited to:

(1) A schedule showing sources and uses of funds for the program;

(2) An itemized budget for each activity and investment category listed in the operations plan;

(3) A Cost effectiveness forecast for each activity and investment category listed in the operations plan;

(4) Where applicable, provision for Consumer loan loss reserves. These loan loss reserves will not be funded by RUS.

(5) Identify expected loan delinquency and default rates and report annually on deviations from the expected rates

(f) Risk analysis. The business plan shall include an evaluation of the financial and operational risk associated with each activity and investment category listed in the operations plan, including an estimate of prospective Consumer loan losses consistent with the loan loss reserve to be established pursuant to subparagraph (e)(4) above.

(g) The borrowers shall follow a bulletin or such other publication as RUS deems appropriate that contains and describes best practices for energy efficiency business plans. RUS will make this bulletin or publication publicly available and revise it from time to time as RUS deems it necessary.

§ 1710.408 Quality assurance plan.

An Eligible EE Program must have a quality assurance plan as part of the program. The quality assurance plan must have the following elements:

(a) Quality assurance assessments shall include the use of qualified energy managers or professional engineers to evaluate program activities and investments;

(b) Energy audits shall be performed for energy efficiency investments involving the building envelope at a Consumer premises;

(c) Energy audits must be performed by certified energy auditors; and

(d) Follow up audits shall be performed within one year after installation on all investments made to confirm whether efficiency improvement expectations are being met.

(e) In cases involving energy efficiency upgrades to a single system (such as a ground source heat pump) the new system must be designed and installed by certified and insured professionals acceptable to the utility.

(f) Industry or manufacturer standard performance tests, as applicable, shall be required on any system upgraded as a result of an EE Program. This testing shall indicate the installed system is meeting its designed performance parameters.

(g) In some programs the utility may elect to recommend independent contractors who can perform energy efficiency related work for their customers. In these cases utilities shall monitor the work done by the contractors and confirm that the contractors are performing quality work. Utilities should remove substandard contractors from their recommended lists if the subcontractors fail to perform at a satisfactory level.

(h) Contractors not hired by the utility may not act as agents of the utility in performing work financed under this subpart.

(i) The borrowers shall follow a bulletin or other publication that RUS deems appropriate and contains and describes best practices for energy efficiency quality assurance plans. RUS will make this bulletin or publication publicly available and revise it from time to time as RUS deems it necessary.

§ 1710.409 Loan provisions.

(a) *Loan term.* The maximum term for loans under this subpart shall be 15 years unless the loans relate to ground source loop investments. The maximum term for loans for ground source loop investments only shall be 30 years. Ground source loop investments as the term is used in this paragraph do not include ancillary equipment related to ground source heat pump systems.

(b) *Loan feasibility.* Loan feasibility must be demonstrated for all loans made under this subpart. Loans made under this subpart shall be secured.

(c) *Reimbursement for completed projects.* (1) A borrower may request an initial advance not to exceed five percent of the total loan amount for working capital purposes to implement an eligible EE Program;

(2) Except for the initial advance provided for in paragraph (c)(1) of this section, all advances under this subpart shall be used for reimbursement of expenditures relating to a completed activity or investment; and

(3) Advances shall be in accordance with RUS procedures.

(d) *Loan amounts.* (1) Cumulative loan amounts outstanding under this subpart may not exceed 100% of Net Utility Plant less total outstanding debt inclusive of any loan applied for under this subpart; and

(2) Financing for Consumer education and outreach programs may not exceed 4% of the total loan amount.

(3) The Rural Utilities Service reserves the right to place a cap on both the total amount of funds an eligible entity can apply for, as well as a cap on the total amount of funds the energy efficiency and Conservation program can utilize in the appropriations. These caps will be announced regularly through the **Federal Register**.

§ 1710.410 Application documents.

The required application documentation listed in this section is not all inclusive but is specific to Eligible borrowers requesting a loan under this subpart and in most cases is supplemental to the general requirements for loan applications provided for in this part 1710:

(a) A letter from the Borrower's General Manager requesting a loan under this subpart.

(b) A copy of the board resolution establishing the EE Program that reflects an undertaking that funds collected in excess of then current amortization requirements for the related RUS loan will be redeployed for EE Program

purposes or used to prepay the RUS loan.

(c) Current RUS-approved EE Program documentation that includes:

(1) A Business Plan that meets the requirements of § 1710.407;

(2) A Quality Assurance Plan that meets the requirements of § 1710.408;

(3) Analytical support documentation that meets the requirements of § 1710.411;

(4) A copy of RUS' written approval of the EE Program.

(d) An EE Program work plan that meets the requirements of § 1710.255;

(e) A statement of whether an initial working capital advance pursuant to § 1710.409(c)(1) is included in the loan budget together with a schedule of how these funds will be used.

(f) A proposed draft Schedule C pursuant to 7 CFR part 1718 that lists assets to be financed under this subpart as excepted property under the RUS mortgage, as applicable.

§ 1710.411 Analytical support documentation.

Applications for loans under this subpart may only be made for eligible activities and investments included in an RUS-approved EE Program. In addition to a business plan and operations plan, a request for EE program approval must include analytical support documentation that demonstrates the program meets the requirements of § 1710.303 and assures RUS of the operational and financial integrity of the EE Program. This documentation must include, but is not necessarily limited to, the following:

(a) A comparison of the utility's projected annual growth in demand after incorporating the EE Program together with an updated baseline forecast on file with RUS, where each includes an inventory of energy consuming devices used by customers in the service territory and a specific time horizon as determined by the utility for meeting the performance objectives established by them for the EE Program;

(b) An itemized estimate of the energy savings and peak demand reduction to be obtained for each category of eligible activities and investments to be pursued;

(c) An evaluation of the Cost effectiveness of each category of eligible activities and investments to be pursued under the EE Program;

(d) Demonstration that the required periods of performance under § 1710.405(c) can reasonably be expected to be met;

(e) A report of discussions and coordination conducted with the power supplier, where applicable, issues identified as a result, and the outcome of this effort.

(f) An estimate of the amount of direct investment in utility-owned generation that will be deferred as a result of the EE Program;

(g) A description of efforts to identify state and local sources of funding and, if available, how they are to be integrated in the financing of the EE Program; and

(h) Copies of sample documentation used by the utility in administering its EE Program.

(i) Such other documents and reports as the Administrator may require.

§ 1710.412 Borrower accounting methods, management reporting and audits.

Nothing in this subpart changes a Borrower's obligation to comply with RUS's accounting, monitoring and reporting requirements. In addition thereto, the Administrator may also require additional management reports that provide the agency with a means of evaluating the extent to which the goals and objectives identified in the EE Plan are being accomplished.

§ 1710.413 Compliance with other laws and regulations.

Nothing in this subpart changes a Borrower's obligation to comply with all laws and regulations to which it is subject.

§§ 1710.414–1710.499 [Reserved]

PART 1717—POST-LOAN POLICIES AND PROCEDURES COMMON TO INSURED AND GUARANTEED ELECTRIC LOANS

18. The authority citation for part 1717 continues to read as follows:

Authority: 7 U.S.C. 901 *et seq.,* 1921 *et seq.,* 6941 *et seq.*

Subpart R—Lien Accommodations and Subordinations for 100 Percent Private Financing

19. Amend § 1717.852 by revising paragraph (b)(2)(ii) to read as follows:

§ 1717.852 Financing purposes.

* * * * *

(b) * * *

(2) * * *

(ii) Renewable energy systems and RUS-approved programs of demand side management, energy efficiency and energy conservation; and

* * * * *

PART 1721—POST-LOAN POLICIES AND PROCEDURES FOR INSURED AND GUARANTEED ELECTRIC LOANS

20. The authority citation for part 1721 continues to read as follows:

Authority: 7 U.S.C. 901 *et seq.,* 1921 *et seq.,* 6941 *et seq.*

Subpart A—Advance of Funds

21. Amend § 1721.1 by revising paragraph (a) to read as follows:

§ 1721.1 Advances.

(a) *Purpose and amount.* With the exception of minor projects, insured loan funds will be advanced only for projects that are included in an RUS approved borrower's construction work plan (CWP), EE Program work plan (EEWP), or approved amendment, and in an approved loan as amended. Loan fund advances can be requested in an amount representing actual costs incurred.

* * * * *

PART 1724—ELECTRIC ENGINEERING, ARCHITECTURAL SERVICES AND DESIGN POLICIES AND PROCEDURES

22. The authority citation for part 1724 continues to read as follows:

Authority: 7 U.S.C. 901 *et seq.,* 1921 *et seq.,* 6941 *et seq.*

Subpart C—Engineering Services

23. Amend § 1724.30 by revising paragraph (a) to read as follows:

§ 1724.30 Borrowers' requirements—engineering services.

* * * * *

(a) Each borrower shall select one or more qualified persons to perform the engineering services involved in the planning (including the development of an EE Program eligible for financing pursuant to subpart H of part 1710 of this chapter, design, and construction management of the system.

* * * * *

PART 1730—ELECTRIC SYSTEM OPERATIONS AND MAINTENANCE

24. The authority citation for part 1730 continues to read as follows:

Authority: 7 U.S.C. 901 *et seq.,* 1921 *et seq.,* 6941 *et seq.*

Subpart B—Operations and Maintenance Requirements

25. Amend Appendix A to subpart B of Part 1730 by adding a new paragraph 13.f. to read as follows:

Appendix A to Subpart B of Part 1730—Review Rating Summary, RUS Form 300

* * * * *

13. * * *

f. Energy Efficiency and Conservation Program quality assurance compliance—Rating:____

* * * * *

Dated: July 16, 2012.

Jonathan Adelstein,

Administrator, Rural Utilities Service.

[FR Doc. 2012–17784 Filed 7–25–12; 8:45 am]

BILLING CODE P

DEPARTMENT OF TRANSPORTATION

Federal Aviation Administration

14 CFR Part 39

[Docket No. FAA–2012–0774; Directorate Identifier 2010–SW–057–AD]

RIN 2120–AA64

Airworthiness Directives; Eurocopter France Helicopters

AGENCY: Federal Aviation Administration (FAA) DOT.

ACTION: Notice of proposed rulemaking (NPRM).

SUMMARY: We propose to adopt a new airworthiness directive (AD) for Eurocopter France (Eurocopter) Model AS350BA helicopters with certain AERAZUR emergency flotation gear container assemblies installed. This proposed AD would require replacing each affected emergency flotation gear container assembly (container assembly) at specified time limits based on the date of manufacture. This proposed AD is prompted by a recognition that container assemblies with an intended operating limitation of 10 years may not have been replaced because the limit is no longer recorded in the Maintenance Program. The proposed actions are intended to prevent failure of the emergency container assembly due to age and subsequent damage to the helicopter and injury to the occupants after an emergency water landing.

DATES: We must receive comments on this proposed AD by September 24, 2012.

ADDRESSES: You may send comments by any of the following methods:

- *Federal eRulemaking Portal:* Go to *http://www.regulations.gov.* Follow the instructions for submitting comments.
- *Fax:* 202–493–2251.
- *Mail:* U.S. Department of Transportation, Docket Operations, M–30, West Building Ground Floor, Room W12–140, 1200 New Jersey Avenue SE., Washington, DC 20590.
- *Hand Delivery:* U.S. Department of Transportation, Docket Operations, M–30, West Building Ground Floor, Room W12–140, 1200 New Jersey Avenue SE., Washington, DC 20590, between 9 a.m. and 5 p.m., Monday through Friday, except Federal holidays.

Examining the AD Docket: You may examine the AD docket on the Internet at *http://www.regulations.gov* or in person at the Docket Operations Office between 9 a.m. and 5 p.m., Monday through Friday, except Federal holidays. The AD docket contains this proposed AD, the economic evaluation, any comments received, and other information. The street address for the Docket Operations Office (telephone 800–647–5527) is in the **ADDRESSES** section. Comments will be available in the AD docket shortly after receipt.

For service information identified in this proposed AD, contact American Eurocopter Corporation, 2701 Forum Drive, Grand Prairie, TX 75053–4005, telephone (800) 232–0323, fax (972) 641–3710, or at *http://www.eurocopter.com.* You may review a copy of the service information at the FAA, Office of the Regional Counsel, Southwest Region, 2601 Meacham Blvd., Room 663, Fort Worth, Texas 76137.

FOR FURTHER INFORMATION CONTACT: Gary Roach, Aviation Safety Engineer, FAA, Rotorcraft Directorate, Regulations and Policy Group, 2601 Meacham Blvd., Fort Worth, Texas 76137, telephone (817) 222–5130, fax (817) 222–5961, email gary.b.roach@faa.gov.

SUPPLEMENTARY INFORMATION

Comments Invited

We invite you to participate in this rulemaking by submitting written comments, data, or views. We also invite comments relating to the economic, environmental, energy, or federalism impacts that might result from adopting the proposals in this document. The most helpful comments reference a specific portion of the proposal, explain the reason for any recommended change, and include supporting data. To ensure the docket does not contain duplicate comments, commenters should send only one copy of written comments, or if comments are filed electronically, commenters should submit only one time.

We will file in the docket all comments that we receive, as well as a report summarizing each substantive public contact with FAA personnel concerning this proposed rulemaking. Before acting on this proposal, we will consider all comments we receive on or before the closing date for comments. We will consider comments filed after the comment period has closed if it is possible to do so without incurring expense or delay. We may change this proposal in light of the comments we receive.

Discussion

The European Aviation Safety Agency (EASA), which is the Technical Agent for the Member States of the European Union, has issued AD No. 2008–0189, dated October 10, 2008, to correct an unsafe condition for the Eurocopter Model AS350BA helicopters with certain AERAZUR emergency flotation gear installed. EASA advises that the container assemblies have an operating life limit of 10 years from the date of manufacture. The EASA AD states that ''as of June 2006, this limit is no longer recorded in the Maintenance Program; therefore, after June 2006, container assemblies having already exceeded the 10-year limit could have not been replaced yet.'' The EASA AD also states that ''floating performance of a helicopter may prove to be insufficient in the event of ditching, in case of failure of a container assembly being operated beyond its operating time limit.''

FAA's Determination

This helicopter model is manufactured in France and is type certificated for operation in the United States under the provisions of 14 CFR 21.29 and the applicable bilateral agreement. Pursuant to the applicable bilateral agreement, EASA has kept the FAA informed of the situation described above.

We are proposing this AD because we evaluated all known relevant information and determined that an unsafe condition is likely to exist or develop on other products of the same type design.

Related Service Information

Eurocopter has issued Alert Service Bulletin No. 25.01.02, dated September 24, 2008 (EASB), which specifies certain times measured from the date of manufacture to replace the container assemblies. EASA classified this EASB as mandatory and issued AD No. 2008–0189, dated October 10, 2008, to ensure the continued airworthiness of these helicopters.

Proposed AD Requirements

This proposed AD would require determining the manufacturing date of each part-numbered container assembly, and depending on the date, replacing

the container assembly with an airworthy container assembly at specified times.

Differences Between This Proposed AD and the EASA AD

We do not allow return of the container assemblies to the manufacturer for an inspection and extension of the life limit.

Costs of Compliance

We estimate that this proposed AD would affect 85 helicopters of U.S. registry. We estimate that operators may incur the following costs in order to comply with this AD.

- It would take minimal time to determine the manufacturing date of the container and about ½ work hour per helicopter to replace the container assemblies at an average labor rate of $85 per work hour.
- Required parts would cost about $21,775 for the left container assembly and $26,690 for the right container assembly per helicopter.

Based on these figures, we estimate the total cost impact of the proposed AD on U.S. operators to be $485,075, assuming 10 helicopters require replacement of the right and left container assemblies.

Authority for This Rulemaking

Title 49 of the United States Code specifies the FAA's authority to issue rules on aviation safety. Subtitle I, section 106, describes the authority of the FAA Administrator. ''Subtitle VII: Aviation Programs,'' describes in more detail the scope of the Agency's authority.

We are issuing this rulemaking under the authority described in ''Subtitle VII, Part A, Subpart III, Section 44701: General requirements.'' Under that section, Congress charges the FAA with promoting safe flight of civil aircraft in air commerce by prescribing regulations for practices, methods, and procedures the Administrator finds necessary for safety in air commerce. This regulation is within the scope of that authority because it addresses an unsafe condition that is likely to exist or develop on products identified in this rulemaking action.

Regulatory Findings

We determined that this proposed AD would not have federalism implications under Executive Order 13132. This proposed AD would not have a substantial direct effect on the States, on the relationship between the national Government and the States, or on the distribution of power and responsibilities among the various levels of government.

For the reasons discussed, I certify this proposed regulation:

1. Is not a ''significant regulatory action'' under Executive Order 12866;
2. Is not a ''significant rule'' under the DOT Regulatory Policies and Procedures (44 FR 11034, February 26, 1979);
3. Will not affect intrastate aviation in Alaska to the extent that it justifies making a regulatory distinction; and
4. Will not have a significant economic impact, positive or negative, on a substantial number of small entities under the criteria of the Regulatory Flexibility Act.

We prepared an economic evaluation of the estimated costs to comply with this proposed AD and placed it in the AD docket.

List of Subjects in 14 CFR Part 39

Air transportation, Aircraft, Aviation safety, Incorporation by reference, Safety.

The Proposed Amendment

Accordingly, under the authority delegated to me by the Administrator, the FAA proposes to amend 14 CFR part 39 as follows:

PART 39—AIRWORTHINESS DIRECTIVES

1. The authority citation for part 39 continues to read as follows:

Authority: 49 U.S.C. 106(g), 40113, 44701.

§ 39.13 [Amended]

2. Section 39.13 is amended by adding the following new airworthiness directive (AD):

Eurocopter France: Docket No. FAA–2012–0774; Directorate Identifier 2010–SW–057–AD.

(a) Applicability

This AD applies to Model AS350BA helicopters with AERAZUR left-hand emergency flotation gear container assembly (container assembly), part number (P/N) 158170 or 158210–1, or right-hand container assembly, P/N 158171 or 158215–1, installed, certificated in any category.

(b) Unsafe Condition

This AD defines the unsafe condition as failure of the container assembly due to age and subsequent damage to the helicopter. This condition could result in injury to the occupants after an emergency water landing.

(c) Compliance

You are responsible for performing each action required by this AD within the specified compliance time unless it has already been accomplished prior to that time.

(d) Required Actions

(1) Determine the manufacturing date of each part-numbered container assembly stamped on the cover of the identification plate.

(2) Replace each container assembly with an airworthy container assembly as follows:

(i) For a container assembly with a date of manufacture 12 or more years before the effective date of this AD, replace within 30 days.

(ii) For a container assembly with a date of manufacture 10 or more years and less than 12 years before the effective date of this AD, replace within 60 days.

(iii) For a container assembly with a date of manufacture 9 or more years and less than 10 years before the effective date of this AD, replace before reaching 10 years and 60 days.

(iv) For a container assembly with a date of manufacture less than 9 years before the effective date of this AD, replace before reaching 10 years.

(e) Alternative Methods of Compliance (AMOCs)

(1) The Manager, Safety Management Group, FAA, may approve AMOCs for this AD. Send your proposal to: Gary Roach, 2601 Meacham Blvd., Fort Worth, Texas 76137; telephone: 817–222–5130, fax: 817–222–5961, email *gary.b.roach@faa.gov*.

(2) For operations conducted under a 14 CFR part 119 operating certificate or under 14 CFR part 91, subpart K, we suggest that you notify your principal inspector, or lacking a principal inspector, the manager of the local flight standards district office or certificate holding district office before operating any aircraft complying with this AD through an AMOC.

(f) Additional Information

(1) Eurocopter Alert Service Bulletin No. 25.01.02, dated September 24, 2008, which is not incorporated by reference, contains additional information about the subject of this AD. For service information identified in this AD, contact American Eurocopter Corporation, 2701 Forum Drive, Grand Prairie, TX 75053–4005, telephone (800) 232–0323, fax (972) 641–3710, or at *http://www.eurocopter.com*. You may review a copy of the service information at the FAA, Office of the Regional Counsel, Southwest Region, 2601 Meacham Blvd., Room 663, Fort Worth, Texas 76137.

(2) The subject of this AD is addressed in European Aviation Safety Agency AD No. 2008–0189, dated October 10, 2008.

(g) Subject

Joint Aircraft Service Component (JASC) Code: 3212 Emergency Flotation Section.

Issued in Fort Worth, Texas, on July 18, 2012.

Kim Smith,

Manager, Rotorcraft Directorate, Aircraft Certification Service.

[FR Doc. 2012–18253 Filed 7–25–12; 8:45 am]

BILLING CODE 4910–13–P

DEPARTMENT OF TRANSPORTATION

Federal Aviation Administration

14 CFR Part 39

[Docket No. FAA–2012–0773; Directorate Identifier 2009–SW–71–AD]

RIN 2120–AA64

Airworthiness Directives; Eurocopter Deutschland GmbH Helicopters

AGENCY: Federal Aviation Administration, DOT.

ACTION: Notice of proposed rulemaking (NPRM).

SUMMARY: We propose to adopt a new airworthiness directive (AD) for the Eurocopter Deutschland GmbH (Eurocopter) Model MBB–BK 117 C–2 helicopters. This proposed AD is prompted by the discovery that some helicopters have blind rivets installed in the place of solid rivets in the long tail rotor drive shaft. The proposed actions are intended to detect blind rivets installed in the long tail rotor drive shaft, which could lead to failure of the tail rotor drive shaft and subsequent loss of control of the helicopter.

DATES: We must receive comments on this proposed AD by September 24, 2012.

ADDRESSES: You may send comments by any of the following methods:

- *Federal eRulemaking Docket:* Go to *http://www.regulations.gov.* Follow the online instructions for sending your comments electronically.
- *Fax:* 202–493–2251.
- *Mail:* Send comments to the U.S. Department of Transportation, Docket Operations, M–30, West Building Ground Floor, Room W12–140, 1200 New Jersey Avenue SE., Washington, DC 20590–0001.
- *Hand Delivery:* Deliver to the ''Mail'' address between 9 a.m. and 5 p.m., Monday through Friday, except Federal holidays.

Examining the AD Docket

You may examine the AD docket on the Internet at *http://www.regulations.gov* or in person at the Docket Operations Office between 9 a.m. and 5 p.m., Monday through Friday, except Federal holidays. The AD docket contains this proposed AD, the economic evaluation, any comments received, and other information. The street address for the Docket Operations Office (telephone 800–647–5527) is in the **ADDRESSES** section. Comments will be available in the AD docket shortly after receipt.

For service information identified in this proposed AD, contact American Eurocopter Corporation, 2701 N. Forum Drive, Grand Prairie, TX 75052, telephone (972) 641–0000 or (800) 232–0323, fax (972) 641–3775, or at *http://www.eurocopter.com/techpub.* You may review the referenced service information at the FAA, Office of the Regional Counsel, Southwest Region, 2601 Meacham Blvd., Room 663, Fort Worth, Texas 76137.

FOR FURTHER INFORMATION CONTACT: Jim Grigg, ASW–112, Manager, FAA, Rotorcraft Directorate, Safety Management Group, 2601 Meacham Blvd., Fort Worth, Texas 76137, telephone (817) 222–5126, fax (817) 222–5961, email *jim.grigg@faa.gov.*

SUPPLEMENTARY INFORMATION:

Comments Invited

We invite you to participate in this rulemaking by submitting written comments, data, or views. We also invite comments relating to the economic, environmental, energy, or federalism impacts that might result from adopting the proposals in this document. The most helpful comments reference a specific portion of the proposal, explain the reason for any recommended change, and include supporting data. To ensure the docket does not contain duplicate comments, commenters should send only one copy of written comments, or if comments are filed electronically, commenters should submit only one time.

We will file in the docket all comments that we receive, as well as a report summarizing each substantive public contact with FAA personnel concerning this proposed rulemaking. Before acting on this proposal, we will consider all comments we receive on or before the closing date for comments. We will consider comments filed after the comment period has closed if it is possible to do so without incurring expense or delay. We may change this proposal in light of the comments we receive.

Discussion

The European Aviation Safety Agency (EASA), which is the Technical Agent for the Member States of the European Union, has issued EASA AD No. 2009–0119, dated June 4, 2009, to correct an unsafe condition for the Eurocopter Model MBB–BK 117 C–2 helicopters. EASA advises that an error was discovered in the Eurocopter aircraft maintenance manual (AMM), which erroneously specifies replacing the solid rivets on the long tail rotor drive shaft with blind rivets. All delivered helicopters had the long tail rotor drive shafts installed during production fitted with the correct solid rivets. The long tail rotor drive shafts repaired in-service in accordance with the AMM may have blind rivets installed. This condition, if not corrected, could lead to a significant reduction of the life of the long tail rotor drive shaft, failure of the long tail rotor drive shaft, and subsequent loss of control of the helicopter.

FAA's Determination

These helicopters have been approved by the aviation authority of the Federal Republic of Germany and are approved for operation in the United States. Pursuant to our bilateral agreement with Germany, EASA, its technical representative, has notified us of the unsafe condition described in its AD. We are proposing this AD because we evaluated all known relevant information and determined that an unsafe condition exists and is likely to exist or develop on other helicopters of these same type designs.

Related Service Information

Eurocopter has issued Alert Service Bulletin No. MBB BK117 C–2–65A–003, dated May 4, 2009 (ASB), which specifies inspecting long tail rotor drive shafts to determine what type of rivets are installed. If one or more blind rivets are installed, the ASB specifies replacing the long tail rotor drive shaft assembly with a serviceable long tail rotor drive shaft assembly. EASA classified this ASB as mandatory and issued EASA AD No. 2009–0119, dated June 4, 2009, to ensure the continued airworthiness of these helicopters.

Proposed AD Requirements

This proposed AD would require, within 100 hours time-in-service (TIS), inspecting the long tail rotor drive shaft assembly for blind rivets. If there are no blind rivets installed on the shaft assembly, no further action would be required by this AD. If there are one or more blind rivets installed on the shaft assembly, this AD would require replacing the shaft assembly of the long tail rotor drive shaft with an airworthy shaft assembly before further flight.

Differences Between This Proposed AD and the EASA AD

This proposed AD uses the term ''TIS'' instead of ''flight hours.''

Costs of Compliance

We estimate that this proposed AD would affect 88 helicopters of U.S. registry. We estimate that operators may incur the following costs in order to comply with this AD:

• It would take about 2 work hours to inspect and replace the tail rotor at an average labor rate of $85 per work hour.

• Required parts to replace each long tail rotor drive shaft assembly cost about $4,600 each.

Based upon these figures, the total cost per helicopter would be $4,770. The total cost for the entire U.S. fleet would be $419,760, assuming that the long tail rotor drive shaft assembly would be required to be replaced on the entire fleet.

Authority for This Rulemaking

Title 49 of the United States Code specifies the FAA's authority to issue rules on aviation safety. Subtitle I, section 106, describes the authority of the FAA Administrator. ''Subtitle VII: Aviation Programs,'' describes in more detail the scope of the Agency's authority.

We are issuing this rulemaking under the authority described in ''Subtitle VII, Part A, Subpart III, Section 44701: General requirements.'' Under that section, Congress charges the FAA with promoting safe flight of civil aircraft in air commerce by prescribing regulations for practices, methods, and procedures the Administrator finds necessary for safety in air commerce. This regulation is within the scope of that authority because it addresses an unsafe condition that is likely to exist or develop on products identified in this rulemaking action.

Regulatory Findings

We determined that this proposed AD would not have federalism implications under Executive Order 13132. This proposed AD would not have a substantial direct effect on the States, on the relationship between the national Government and the States, or on the distribution of power and responsibilities among the various levels of government.

For the reasons discussed, I certify this proposed regulation:

1. Is not a ''significant regulatory action'' under Executive Order 12866;

2. Is not a ''significant rule'' under the DOT Regulatory Policies and Procedures (44 FR 11034, February 26, 1979);

3. Will not affect intrastate aviation in Alaska to the extent that it justifies making a regulatory distinction; and

4. Will not have a significant economic impact, positive or negative, on a substantial number of small entities under the criteria of the Regulatory Flexibility Act.

We prepared an economic evaluation of the estimated costs to comply with this proposed AD and placed it in the AD docket.

List of Subjects in 14 CFR Part 39

Air transportation, Aircraft, Aviation safety, Incorporation by reference, Safety.

The Proposed Amendment

Accordingly, under the authority delegated to me by the Administrator, the FAA proposes to amend 14 CFR part 39 as follows:

PART 39—AIRWORTHINESS DIRECTIVES

1. The authority citation for part 39 continues to read as follows:

Authority: 49 U.S.C. 106(g), 40113, 44701.

§ 39.13 [Amended]

2. The FAA amends § 39.13 by adding the following new airworthiness directive (AD):

Eurocopter Deutschland GmbH: Docket No. FAA–2012–0773; Directorate Identifier 2009–SW–71–AD.

(a) Applicability

This AD applies to Model MBB BK117 C–2 helicopters, with long tail rotor drive shaft assembly part number (P/N) B651M1002101 or B651M1002102 installed, certificated in any category.

(b) Unsafe Condition

This AD defines the unsafe condition as the installation of blind rivets instead of solid rivets in the long tail rotor drive shaft. This condition could result in failure of the long tail rotor drive shaft and subsequent loss of control of the helicopter.

(c) Compliance

You are responsible for performing each action required by this AD within the specified compliance time unless it has already been accomplished prior to that time.

(d) Actions Required

Within 100 hours time-in-service (TIS), inspect the long tail rotor drive shaft assembly for blind rivets as indicated in sections A–A and B–B of Figure 1 to Paragraph (d) of this AD.

(1) If there are no blind rivets installed on the shaft assembly, no further action is required by this AD.

(2) If there are one or more blind rivets installed on the shaft assembly in the areas depicted in Figure 1 to Paragraph (d) of this AD, before further flight, replace the shaft assembly of the long tail rotor drive shaft with an airworthy shaft assembly that does not have blind rivets installed.

(3) After the effective date of this AD, do not install a tail rotor drive shaft assembly that has blind rivets installed.

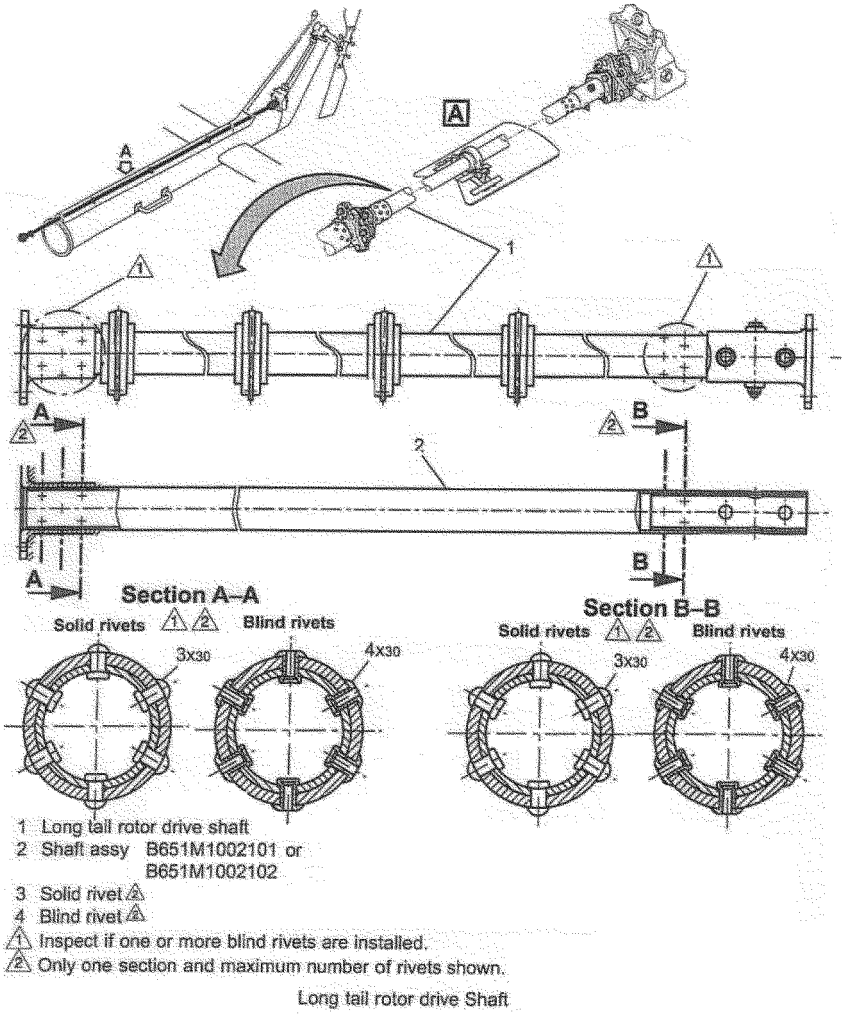

Figure 1 to Paragraph (d)

(e) Alternative Methods of Compliance (AMOC)

(1) The Manager, FAA, Safety Management Group, may approve AMOCs for this AD. Send your proposal to: Jim Grigg, ASW–112, Manager, Rotorcraft Directorate, Safety Management Group, 2601 Meacham Blvd., Fort Worth, Texas 76137, telephone (817) 222–5126, fax (817) 222–5961, email *jim.grigg@faa.gov*.

(2) For operations conducted under 14 CFR part 119 operating certificate or under 14 CFR part 91, subpart K, we suggest that you notify your principal inspector, or lacking a principal inspector, the manager of the local flight standards district office or certificate holding district office before operating any aircraft complying with this AD through an AMOC.

(f) Additional Information

(1) Eurocopter Alert Service Bulletin No. MBB BK117 C–2–65A–003, dated May 4, 2009, which is not incorporated by reference, contains additional information about the subject of this AD. For service information identified in this AD, contact American Eurocopter Corporation, 2701 N. Forum Drive, Grand Prairie, TX 75052, telephone (972) 641–0000 or (800) 232–0323, fax (972) 641–3775, or at *http://www.eurocopter.com/techpub*. You may review the referenced service information at the FAA, Office of the Regional Counsel, Southwest Region, 2601 Meacham Blvd., Room 663, Fort Worth, Texas 76137.

(2) The subject of this AD is addressed in European Aviation Safety Agency AD No. 2009–0119, dated June 4, 2009.

(g) Subject

Joint Aircraft System/Component (JASC) Code 6510: Tail Rotor Drive Shaft.

Issued in Fort Worth, Texas, on July 18, 2012.

Kim Smith,

Manager, Rotorcraft Directorate, Aircraft Certification Service.

[FR Doc. 2012–18254 Filed 7–25–12; 8:45 am]

BILLING CODE 4910–13–P

DEPARTMENT OF TRANSPORTATION

Federal Aviation Administration

14 CFR Part 39

[Docket No. FAA–2012–0772; Directorate Identifier 2007–SW–053–AD]

RIN 2120–AA64

Airworthiness Directives; Eurocopter France Helicopters

AGENCY: Federal Aviation Administration (FAA), DOT.

ACTION: Notice of proposed rulemaking (NPRM).

SUMMARY: We propose to adopt a new airworthiness directive (AD) for Eurocopter France (Eurocopter) Model EC130 B4 helicopters with a cabin vibration damper installed. This proposed AD is prompted by a crack and failure of a cabin vibration damper

blade. The proposed actions are intended to modify the cabin vibration damper assembly to prevent contact with the flight controls in the event of a cabin vibration blade failure, jamming of a flight control, and subsequent loss of control of the helicopter.

DATES: We must receive comments on this proposed AD by September 24, 2012.

ADDRESSES: You may send comments by any of the following methods:

- *Federal eRulemaking Docket:* Go to *http://www.regulations.gov.* Follow the online instructions for sending your comments electronically.
- *Fax:* 202–493–2251.
- *Mail:* Send comments to the U.S. Department of Transportation, Docket Operations, M–30, West Building Ground Floor, Room W12–140, 1200 New Jersey Avenue SE., Washington, DC 20590–0001.
- *Hand Delivery:* Deliver to the ''Mail'' address between 9 a.m. and 5 p.m., Monday through Friday, except Federal holidays.

Examining the AD Docket

You may examine the AD docket on the Internet at *http://www.regulations.gov* or in person at the Docket Operations Office between 9 a.m. and 5 p.m., Monday through Friday, except Federal holidays. The AD docket contains this proposed AD, the economic evaluation, any comments received, and other information. The street address for the Docket Operations Office (telephone 800–647–5527) is in the **ADDRESSES** section. Comments will be available in the AD docket shortly after receipt.

For service information identified in this proposed AD, contact American Eurocopter Corporation, 2701 Forum Drive Grand Prairie, TX 75053–4005, telephone (800) 232–0323, fax (972) 641–3710, or at *http://www.eurocopter.com.* You may review copies of the referenced service information at the FAA, Office of the Regional Counsel, Southwest Region, 2601 Meacham Blvd., Room 663, Fort Worth, Texas 76137.

FOR FURTHER INFORMATION CONTACT: Gary Roach, Aerospace Engineer, FAA, Regulations and Policy Group, 2601 Meacham Blvd., Fort Worth, Texas 76137; telephone: (817) 222–5130, fax: 817–222–5961; email *gary.b.roach@faa.gov.*

SUPPLEMENTARY INFORMATION:

Comments Invited

We invite you to participate in this rulemaking by submitting written comments, data, or views. We also invite comments relating to the economic, environmental, energy, or federalism impacts that might result from adopting the proposals in this document. The most helpful comments reference a specific portion of the proposal, explain the reason for any recommended change, and include supporting data. To ensure the docket does not contain duplicate comments, commenters should send only one copy of written comments, or if comments are filed electronically, commenters should submit only one time.

We will file in the docket all comments that we receive, as well as a report summarizing each substantive public contact with FAA personnel concerning this proposed rulemaking. Before acting on this proposal, we will consider all comments we receive on or before the closing date for comments. We will consider comments filed after the comment period has closed if it is possible to do so without incurring expense or delay. We may change this proposal in light of the comments we receive.

Discussion

The European Aviation Safety Agency (EASA), which is the Technical Agent for the Member States of the European Union, has issued EASA AD No. 2006–0278, dated September 7, 2006 (AD 2006–0278), to correct an unsafe condition for Eurocopter Model EC130 B4 helicopters. EASA advises of a cracked cabin vibration damper blade, which could lead to jamming of a flight control.

FAA's Determination

This helicopter model is manufactured in France and is type certificated for operation in the United States under the provisions of 14 CFR 21.29 and the applicable bilateral agreement. Pursuant to the applicable bilateral agreement, EASA has kept the FAA informed of the situation described above. The FAA has examined the findings of EASA, reviewed all available information, and determined that AD action is necessary for helicopters of this type design that are certificated for operation in the United States.

We are proposing this AD because we evaluated all known relevant information and determined that an unsafe condition is likely to exist or develop on other helicopters of the same type design.

Related Service Information

Eurocopter has issued Alert Service Bulletin (ASB) No. 53A008, Revision 0, dated July 19, 2006 (ASB 53A008), which supersedes ASB No. 05A002, Revision 0, dated July 18, 2006, and specifies installing a cabin vibration damper containment device. EASA classified ASB 53A008 as mandatory and issued AD 2006–0278 to ensure the continued airworthiness of these helicopters.

Proposed AD Requirements

This proposed AD would require, depending on the modification status of the helicopter, complying with certain portions of ASB 53A008.

Differences Between This Proposed AD and the EASA AD

The EASA AD requires two daily visual inspections for cracks in the blade of each cabin vibration damper and replacement of a blade if there is a crack; this proposed AD does not. The EASA AD requires compliance by a calendar date. This proposed AD requires compliance within 100 hours time-in-service.

Costs of Compliance

We estimate that this proposed AD would affect 122 helicopters of U.S. registry. We estimate that operators may incur the following costs in order to comply with this AD.

- $340 for 4 work hours to install a vibration damper casing assembly at an average labor rate of $85 per work hour,
- $1,500 for required parts per helicopter, and
- $224,480 total cost for the fleet.

Authority for This Rulemaking

Title 49 of the United States Code specifies the FAA's authority to issue rules on aviation safety. Subtitle I, section 106, describes the authority of the FAA Administrator. ''Subtitle VII: Aviation Programs,'' describes in more detail the scope of the Agency's authority.

We are issuing this rulemaking under the authority described in ''Subtitle VII, Part A, Subpart III, Section 44701: General requirements.'' Under that section, Congress charges the FAA with promoting safe flight of civil aircraft in air commerce by prescribing regulations for practices, methods, and procedures the Administrator finds necessary for safety in air commerce. This regulation is within the scope of that authority because it addresses an unsafe condition that is likely to exist or develop on products identified in this rulemaking action.

Regulatory Findings

We determined that this proposed AD would not have federalism implications under Executive Order 13132. This proposed AD would not have a

substantial direct effect on the States, on the relationship between the national Government and the States, or on the distribution of power and responsibilities among the various levels of government.

For the reasons discussed, I certify this proposed regulation:

1. Is not a ''significant regulatory action'' under Executive Order 12866;

2. Is not a ''significant rule'' under the DOT Regulatory Policies and Procedures (44 FR 11034, February 26, 1979);

3. Will not affect intrastate aviation in Alaska to the extent that it justifies making a regulatory distinction; and

4. Will not have a significant economic impact, positive or negative, on a substantial number of small entities under the criteria of the Regulatory Flexibility Act.

We prepared an economic evaluation of the estimated costs to comply with this proposed AD and placed it in the AD docket.

List of Subjects in 14 CFR Part 39

Air transportation, Aircraft, Aviation safety, Incorporation by reference, Safety.

The Proposed Amendment

Accordingly, under the authority delegated to me by the Administrator, the FAA proposes to amend 14 CFR part 39 as follows:

PART 39—AIRWORTHINESS DIRECTIVES

1. The authority citation for part 39 continues to read as follows:

Authority: 49 U.S.C. 106(g), 40113, 44701.

§ 39.13 [Amended]

2. The FAA amends § 39.13 by adding the following new airworthiness directive (AD):

Eurocopter France: Docket No. FAA–2012–0772; Directorate Identifier 2007–SW–053–AD.

(a) Applicability

This AD applies to Model EC130 B4 helicopters with a cabin vibration damper installed, except those modified in accordance with Modification 073565, certificated in any category.

(b) Unsafe Condition

This AD defines the unsafe condition as a cracked cabin vibration damper blade. This condition could result in failure of the blade, jamming of the flight controls, and subsequent loss of control of the helicopter.

(c) Compliance

You are responsible for performing each action required by this AD within the specified compliance time unless it has already been accomplished prior to that time.

(d) Required Actions

Within the next 100 hours time-in-service:

(1) For helicopters that have not been modified in accordance with Modification 073521 or Modification 073525, install a vibration damper casing assembly on both sides of the helicopter by following paragraphs 2.B.2.a, and 2.B.5 of the Accomplishment Instructions of Eurocopter Alert Service Bulletin (SB) No. 53A008, dated July 19, 2006 (ASB 53A008).

(2) For helicopters that have been modified in accordance with Modification 073521 either at the time of manufacture or pursuant to Eurocopter SB No. 53–006, Revision 1, dated September 30, 2004; or Modification 073525 either at the time of manufacture or pursuant to Eurocopter SB No. 53–007, Revision 1, dated February 19, 2007, install a vibration damper casing assembly on both sides of the helicopter by following paragraphs 2.B.3.a, 2.B.3.b, and 2.B.5 of the Accomplishment Instructions of ASB 53A008.

(e) Alternative Methods of Compliance (AMOC)

(1) The Manager, Rotorcraft Standards Staff, FAA, may approve AMOCs for this AD. Send your proposal to Gary Roach, Aerospace Engineer, FAA, 2601 Meacham Blvd., Fort Worth, Texas 76137; telephone: (817) 222–5130, fax 817–222–5961; email *gary.b.roach@faa.gov.*

(2) For operations conducted under 14 CFR part 119 operating certificate or under 14 CFR part 91, subpart K, we suggest that you notify your principal inspector, or lacking a principal inspector, the manager of the local flight standards district office or certificate holding district office before operating any aircraft complying with this AD through an AMOC.

(f) Additional Information

(1) Eurocopter Service Bulletin (SB) No. 53–006, Revision 1, dated September 30, 2004; SB No. 53–007, Revision 1, dated February 19, 2007; and Alert SB No. 05A002, Revision 0, dated July 18, 2006, which are not incorporated by reference, contain additional information about the subject of this AD. For service information identified in this proposed AD, contact American Eurocopter Corporation, 2701 Forum Drive, Grand Prairie, TX 75053–4005, telephone (800) 232–0323, fax (972) 641–3710, or at *http://www.eurocopter.com.* You may review the referenced service information at the FAA, Office of the Regional Counsel, Southwest Region, 2601 Meacham Blvd., Room 663, Fort Worth, Texas 76137.

(2) The subject of this AD is addressed in European Aviation Safety Agency AD No. 2006–0278, dated September 7, 2006.

(g) Subject

Joint Aircraft Service Component (JASC) Code: 1810 Helicopter Vibration Analysis.

Issued in Fort Worth, Texas, on July 18, 2012.

Kim Smith,

Manager, Rotorcraft Directorate, Aircraft Certification Service.

[FR Doc. 2012–18256 Filed 7–25–12; 8:45 am]

BILLING CODE 4910–13–P

DEPARTMENT OF HOMELAND SECURITY

U.S. Customs and Border Protection

DEPARTMENT OF THE TREASURY

19 CFR Parts 4, 10, 18, 19, 113, 122, 123, 141, 142, 143, 144, 146, 151, and 181

[USCBP–2012–0002]

RIN 1515–AD81

Changes to the In-Bond Process; Correction

AGENCY: U.S. Customs and Border Protection, DHS; Treasury.

ACTION: Notice of proposed rulemaking; correction.

SUMMARY: U.S. Customs and Border Protection (CBP) published a notice of proposed rulemaking in the **Federal Register** on February 22, 2012, proposing various changes to the in-bond regulations to enhance CBP's ability to regulate and track in-bond merchandise and to ensure that the in-bond merchandise is properly entered and duties are paid or that the in-bond merchandise is exported. In that document, CBP published a summary of its analysis under the Regulatory Flexibility Act and stated that the complete Initial Regulatory Flexibility Analysis (IRFA) was posted on the regulations.gov Web site. As CBP inadvertently failed to post the IRFA on the docket when the NPRM was published, CBP is notifying the public that the IRFA has now been posted and is seeking comments on the conclusion in the NPRM and the IRFA that the rule may have a significant economic impact on a substantial number of small entities.

DATES: Comments must be received on or before August 27, 2012.

FOR FURTHER INFORMATION CONTACT: Seth Renkema, Office of International Trade, *SETH.D.RENKEMA@CBP.DHS.GOV.*

ADDRESSES: You may submit comments, identified by docket number, by one of the following methods:

- *Federal eRulemaking Portal: http://www.regulations.gov.* Follow the instructions for submitting comments via docket number USCBP 2012–0002.
- *Mail:* Border Security Regulations Branch, Office of Regulations and Rulings, U.S. Customs and Border Protection, Mint Annex, 799 9th Street NW., Washington, DC 20229.

Instructions: All submissions received must include the agency name and docket number for this rulemaking. All

comments received will be posted without change to *http://www.regulations.gov*, including any personal information provided. For detailed instructions on submitting comments and additional information on the rulemaking process, see the ''Public Participation'' heading of the **SUPPLEMENTARY INFORMATION** section of this document.

Docket: For access to the docket to read background documents or comments received, go to *http://www.regulations.gov.* Submitted comments may also be inspected during regular business days between the hours of 9 a.m. and 4:30 p.m. at the Office of International Trade, Regulations and Rulings, U.S. Customs and Border Protection, 799 9th Street NW., 5th Floor, Washington, DC. Arrangements to inspect submitted comments should be made in advance by calling Mr. Joseph Clark at (202) 325–0118.

SUPPLEMENTARY INFORMATION:

Public Participation

Interested persons are invited to participate by submitting written data, views, or arguments on CBP's conclusion that the rule may have a significant economic impact on a substantial number of small entities.

Background

On February 22, 2012, CBP published a notice of proposed rulemaking (NPRM) titled ''Changes to the In-Bond Process'' in the **Federal Register** (77 FR 10622) and requested comments from the public. The NPRM proposes various changes to the in-bond regulations to enhance CBP's ability to regulate and track in-bond merchandise and to ensure that the in-bond merchandise is properly entered and duties are paid or that the in-bond merchandise is exported. The comment period closed on April 23, 2012.

As part of the development of the NPRM and pursuant to the Regulatory Flexibility Act of 1980, as amended by the Small Business Regulatory Enforcement Fairness Act of 1996 (RFA/SBREFA) and E.O. 13272, titled ''Proper Consideration of Small Entities in Agency Rulemaking,'' CBP prepared a regulatory flexibility analysis. Because the initial screening analysis indicated that the rule might significantly affect a substantial number of small entities, CBP was required to conduct an Initial Regulatory Flexibility Analysis (IRFA) to further assess these impacts.

In the NPRM and the IRFA, CBP concluded that the rule may significantly affect a substantial number of small entities. The NPRM summarizes the IRFA, seeks comments on its conclusion and states that the complete IRFA can be found in the docket for the rulemaking. However, CBP inadvertently failed to timely post the IRFA to the docket. The complete IRFA has now been posted to the docket at *http://www.regulations.gov* under Docket USCBP–2012–0002 and CBP is again inviting interested parties to comment on CBP's conclusion that the rule may have a significant economic impact on a substantial number of small entities. All comments must be received within 30 days of publication of this notice. CBP will not accept comments on any other topic.

Dated: July 20, 2012.

Harold Singer,

Director, Regulations and Disclosure Law Division.

[FR Doc. 2012–18187 Filed 7–25–12; 8:45 am]

BILLING CODE 9111–14–P

DEPARTMENT OF HOMELAND SECURITY

Coast Guard

33 CFR Parts 151, 155, 156, and 157

46 CFR Part 197

[Docket Number USCG–2010–0194]

RIN 1625–AB57

MARPOL Annex I Amendments; Extension of Comment Period

AGENCY: Coast Guard, DHS.

ACTION: Extension of comment period.

SUMMARY: The Coast Guard is extending the comment period for the notice of proposed rulemaking (NPRM) entitled ''MARPOL Annex I Amendments,'' published on April 9, 2012, for 60 days. We have decided to extend the comment period at the request of industry because we omitted from the docket the accompanying Regulatory Analysis, which informs the proposal.

DATES: Comments and related material must be submitted to the docket by September 7, 2012.

ADDRESSES: You may submit comments identified by docket number using any one of the following methods:

(1) *Federal eRulemaking Portal: http://www.regulations.gov.*

(2) *Fax:* 202–493–2251.

(3) *Mail or Delivery:* Docket Management Facility (M–30), U.S. Department of Transportation, West Building Ground Floor, Room W12–140, 1200 New Jersey Avenue SE., Washington, DC 20590–0001. Deliveries accepted between 9 a.m. and 5 p.m., Monday through Friday, except federal holidays. The telephone number is 202–366–9329.

See the ''Public Participation and Request for Comments'' portion of the **SUPPLEMENTARY INFORMATION** section below for further instructions on submitting comments. To avoid duplication, please use only one of these three methods.

FOR FURTHER INFORMATION CONTACT: If you have questions on this rule, call or email Scott E. Hartley, U.S. Coast Guard Office of Operating and Environmental Standards, (CG–OES–2); telephone 202–372–1437, email *Scott.E.Hartley@uscg.mil.* If you have questions on viewing or submitting material to the docket, call Renee V. Wright, Program Manager, Docket Operations, telephone 202–366–9826.

SUPPLEMENTARY INFORMATION:

A. Public Participation and Request for Comments

We encourage you to participate in this rulemaking by submitting comments and related materials. All comments received will be posted without change to *http://www.regulations.gov* and will include any personal information you have provided.

1. Submitting Comments

If you submit a comment, please include the docket number for this rulemaking, indicate the specific section of this document to which each comment applies, and provide a reason for each suggestion or recommendation. You may submit your comments and material online at *http://www.regulations.gov,* or by fax, mail, or hand delivery, but please use only one of these means. If you submit a comment online, it will be considered received by the Coast Guard when you successfully transmit the comment. If you fax, hand deliver, or mail your comment, it will be considered as having been received by the Coast Guard when it is received at the Docket Management Facility. We recommend that you include your name and a mailing address, an email address, or a telephone number in the body of your document so that we can contact you if we have questions regarding your submission.

To submit your comment online, go to *http://www.regulations.gov,* type the docket number (USCG–2010–0194) in the ''SEARCH'' box and click ''SEARCH.'' Click on ''Submit a Comment'' on the line associated with this rulemaking.

If you submit your comments by mail or hand delivery, submit them in an

unbound format, no larger than 8½ by 11 inches, suitable for copying and electronic filing. If you submit comments by mail and would like to know that they reached the Facility, please enclose a stamped, self-addressed postcard or envelope. We will consider all comments and material received during the comment period and may change the rule based on your comments.

2. Viewing Comments and Documents

To view comments, as well as documents mentioned in this preamble as being available in the docket, go to *http://www.regulations.gov,* type the docket number (USCG–2010–0194) in the ''SEARCH'' box and click ''SEARCH.'' Click on Open Docket Folder on the line associated with this rulemaking. You may also visit the Docket Management Facility in Room W12–140 on the ground floor of the Department of Transportation West Building, 1200 New Jersey Avenue SE., Washington, DC 20590, between 9 a.m. and 5 p.m., Monday through Friday, except Federal holidays.

3. Privacy Act

Anyone can search the electronic form of comments received into any of our dockets by the name of the individual submitting the comment (or signing the comment, if submitted on behalf of an association, business, labor union, etc.). You may review a Privacy Act notice regarding our public dockets in the January 17, 2008, issue of the **Federal Register** (73 FR 3316).

B. Regulatory History and Information

The Coast Guard published an NPRM entitled ''MARPOL Annex I Amendments'' on April 9, 2012 (77 FR 21360) proposing to align Coast Guard regulations with recent amendments to Annex I of the International Convention for the Prevention of Pollution from Ships, 1973, as modified by the Protocol of 1978. The NPRM also proposed to incorporate some elements from the International Convention for the Safety of Life at Sea into our regulations. All comments on this NPRM were originally due by July 9, 2012.

C. Background and Purpose

On June 14, 2012, we received a letter from the American Petroleum Institute requesting a 60-day extension of the comment period. It noted that the Regulatory Analysis had not been posted to the docket, and that examination of that document was important in analyzing the proposal. We found that the Regulatory Analysis was in fact not available in the docket as stated in the NPRM, and promptly made it available and ensured it was properly posted to the docket. However, as we wish to give commenters the full amount of time originally provided to review our analysis, we are reopening the comment period to allow commenters the full period to comment on the Regulatory Analysis.

D. Authority

This notice is issued under authority of 5 U.S.C. 552(a).

Dated: July 17, 2012.

F.J. Sturm,

Acting Director of Commercial Regulations, and Standards, U.S. Coast Guard.

[FR Doc. 2012–18226 Filed 7–25–12; 8:45 am]

BILLING CODE 9110–04–P

DEPARTMENT OF COMMERCE

Patent and Trademark Office

37 CFR Part 1

[Docket No.: PTO–P–2012–0015]

RIN 0651–AC77

Changes To Implement the First Inventor To File Provisions of the Leahy-Smith America Invents Act

AGENCY: United States Patent and Trademark Office, Commerce.

ACTION: Notice of proposed rulemaking.

SUMMARY: The Leahy-Smith America Invents Act (AIA) amends the patent laws pertaining to the conditions of patentability to convert the United States patent system from a ''first to invent'' system to a ''first inventor to file'' system; treats United States patents and United States patent application publications as prior art as of their earliest effective United States, foreign, or international filing date; eliminates the requirement that a prior public use or sale be ''in this country'' to be a prior art activity; and treats commonly owned or joint research agreement patents and patent application publications as being by the same inventive entity for purposes of novelty, as well as nonobviousness. The AIA also repeals the provisions pertaining to statutory invention registrations. The current rules of practice in patent cases have a number of provisions based on the conditions of patentability of a ''first to invent'' patent system. The United States Patent and Trademark Office (Office) is proposing to amend the rules of practice in patent cases to implement the changes to the conditions of patentability in the AIA, and to eliminate the provisions pertaining to statutory invention registrations.

DATES: *Comment Deadline Date:* Written comments must be received on or before October 5, 2012.

ADDRESSES: Comments should be sent by electronic mail message over the Internet addressed to: *fitf_rules@uspto.gov.* Comments may also be submitted by postal mail addressed to: Mail Stop Comments—Patents, Commissioner for Patents, P.O. Box 1450, Alexandria, VA, 22313–1450, marked to the attention of Susy Tsang-Foster, Legal Advisor, Office of Patent Legal Administration.

Comments may also be sent by electronic mail message over the Internet via the Federal eRulemaking Portal. See the Federal eRulemaking Portal Web site (*http://www.regulations.gov*) for additional instructions on providing comments via the Federal eRulemaking Portal.

Although comments may be submitted by postal mail, the Office prefers to receive comments by electronic mail message over the Internet because sharing comments with the public is more easily accomplished. Electronic comments are preferred to be submitted in plain text, but also may be submitted in ADOBE® portable document format or MICROSOFT WORD® format. Comments not submitted electronically should be submitted on paper in a format that facilitates convenient digital scanning into ADOBE® portable document format.

The comments will be available for public inspection at the Office of the Commissioner for Patents, currently located in Madison East, Tenth Floor, 600 Dulany Street, Alexandria, Virginia. Comments also will be available for viewing via the Office's Internet Web site (*http://www.uspto.gov*). Because comments will be made available for public inspection, information that the submitter does not desire to make public, such as an address or phone number, should not be included in the comments.

FOR FURTHER INFORMATION CONTACT: Susy Tsang-Foster, Legal Advisor ((571) 272–7711), Pinchus M. Laufer, Senior Legal Advisor ((571) 272–7726), or Eugenia A. Jones, Senior Legal Advisor ((571) 272–7727), Office of Patent Legal Administration, Office of the Deputy Commissioner for Patent Examination Policy.

SUPPLEMENTARY INFORMATION:

Executive Summary: Purpose: Section 3 of the AIA, *inter alia,* amends the patent laws to: (1) Convert the United States patent system from a ''first to

invent'' system to a ''first inventor to file'' system; (2) treat U.S. patents and U.S. patent application publications as prior art as of their earliest effective filing date, regardless of whether the earliest effective filing date is based upon an application filed in the U.S. or in another country; (3) eliminate the requirement that a prior public use or sale be ''in this country'' to be a prior art activity; and (4) treat commonly owned or joint research agreement patents and patent application publications as being by the same inventive entity for purposes of 35 U.S.C. 102, as well as 35 U.S.C. 103. These changes in section 3 of the AIA are effective on March 16, 2013, but apply only to certain applications filed on or after March 16, 2013. The Office sets out the conditions of patentability in 35 U.S.C. 102 and 103 as interpreted by the case law in the *Manual of Patent Examining Procedure* (MPEP). *See* MPEP §§ 2121 through 2143 (8th ed. 2001) (Rev. 8, July 2010). The Office plans to issue guidelines and train the Patent Examining Corps on how the changes to 35 U.S.C. 102 and 103 in section 3 of the AIA impact the provisions of the MPEP pertaining to 35 U.S.C. 102 and 103.

The rules of practice for patent cases in title 37 of the Code of Federal Regulations (CFR) are currently drafted for examination under the ''first to invent'' system in effect prior to March 16, 2013. Thus, this notice proposes changes to the rules of practice in title 37, CFR, for consistency with, and to address the examination issues raised by, the changes in section 3 of the AIA.

Summary of Major Provisions: The Office is specifically proposing to provide the following changes:

The Office is proposing to add the definitions provided in the AIA to the rules of practice for the terms commonly used in the rules of practice.

The Office is providing for the submission of affidavits or declarations showing that: (1) A disclosure upon which a claim rejection is based was by the inventor or joint inventor or by a party who obtained the subject matter disclosed directly or indirectly from the inventor or a joint inventor; or (2) there was a prior public disclosure by the inventor or a joint inventor or another who obtained the subject matter disclosed directly or indirectly from the inventor or a joint inventor.

The Office is proposing to provide for the situation in which a U.S. patent or U.S. patent application publication has a prior art effect as of the filing date of a foreign priority application by requiring that the certified copy of the foreign application be filed within the later of four months from the actual filing date of the application or sixteen months from the filing date of the prior foreign application.

The Office is eliminating the provisions directed to statutory invention registrations.

Finally, the Office is proposing additional requirements for nonprovisional applications filed on or after March 16, 2013, that claim the benefit of the filing date of a foreign, provisional, or nonprovisional application filed prior to March 16, 2013. If such a nonprovisional application contains at any time a claim to a claimed invention that has an effective filing date on or after March 16, 2013, the applicant must provide a statement to that effect within the later of four months from the actual filing date of the later-filed application, four months from the date of entry into the national stage in an international application, sixteen months from the filing date of the prior-filed application, or the date that a first claim to a claimed invention that has an effective filing date on or after March 16, 2013, is presented in the application. In addition, if such a nonprovisional application does not contain a claim to a claimed invention that has an effective filing date on or after March 16, 2013, but discloses subject matter not also disclosed in the foreign, provisional, or nonprovisional application, the applicant must provide a statement that the application includes subject matter not disclosed in the foreign, provisional, or nonprovisional application within the later of four months from the actual filing date of the later-filed application, four months from the date of entry into the national stage in an international application, or sixteen months from the filing date of the prior-filed application. This will permit the Office to readily determine whether the nonprovisional application is subject to the changes to 35 U.S.C. 102 and 103 in the AIA.

Costs and Benefits: This rulemaking is not economically significant as that term is defined in Executive Order 12866 (Sept. 30, 1993).

Specific Changes to title 35, United States Code: The AIA was enacted into law on September 16, 2011. *See* Public Law 112–29, 125 Stat. 284 (2011). Section 3 of the AIA specifically amends 35 U.S.C. 102 to provide in 35 U.S.C. 102(a) that a person shall be entitled to a patent unless: (1) The claimed invention was patented, described in a printed publication, or in public use, on sale, or otherwise available to the public before the effective filing date of the claimed invention; or (2) the claimed invention was described in a patent issued under 35 U.S.C. 151, or in an application for patent published or deemed published under 35 U.S.C. 122(b), in which the patent or application, as the case may be, names another inventor and was effectively filed before the effective filing date of the claimed invention. *See* 125 Stat. at 285–86. The publication of an international application designating the United States by the World Intellectual Property Organization (WIPO) is deemed a publication under 35 U.S.C. 122(b) (except as provided in 35 U.S.C. 154(d)). *See* 35 U.S.C. 374.

35 U.S.C. 102(b) as amended by section 3 of the AIA provides for exceptions to the provisions of 35 U.S.C. 102(a). The exceptions in 35 U.S.C. 102(b)(1) provide that a disclosure made one year or less before the effective filing date of a claimed invention shall not be prior art to the claimed invention under 35 U.S.C. 102(a)(1) if: (1) The disclosure was made by the inventor or joint inventor or by another who obtained the subject matter disclosed directly or indirectly from the inventor or a joint inventor; or (2) the subject matter disclosed had, before such disclosure, been publicly disclosed by the inventor or a joint inventor or another who obtained the subject matter disclosed directly or indirectly from the inventor or a joint inventor. *See* 125 Stat. at 286. The exceptions in 35 U.S.C. 102(b)(2) provide that a disclosure shall not be prior art to a claimed invention under 35 U.S.C. 102(a)(2) if: (1) The subject matter disclosed was obtained directly or indirectly from the inventor or a joint inventor; (2) the subject matter disclosed had, before such subject matter was effectively filed under 35 U.S.C. 102(a)(2), been publicly disclosed by the inventor or a joint inventor or another who obtained the subject matter disclosed directly or indirectly from the inventor or a joint inventor; or (3) the subject matter disclosed and the claimed invention, not later than the effective filing date of the claimed invention, were owned by the same person or subject to an obligation of assignment to the same person. *See id.*

35 U.S.C. 102(c) as amended by section 3 of the AIA provides for common ownership under joint research agreements. 35 U.S.C. 102(c) specifically provides that subject matter disclosed and a claimed invention shall be deemed to have been owned by the same person or subject to an obligation of assignment to the same person in applying the provisions of 35 U.S.C. 102(b)(2)(C) if: (1) The subject matter disclosed was developed and the claimed invention was made by, or on behalf of, one or more parties to a joint

research agreement that was in effect on or before the effective filing date of the claimed invention; (2) the claimed invention was made as a result of activities undertaken within the scope of the joint research agreement; and (3) the application for patent for the claimed invention discloses or is amended to disclose the names of the parties to the joint research agreement. *See id.* The AIA also provides that the enactment of 35 U.S.C. 102(c) is done with the same intent to promote joint research activities that was expressed, including in the legislative history, through the enactment of the Cooperative Research and Technology Enhancement Act of 2004 (the ''CREATE Act''; Pub. L. 108–453, 118 Stat. 3596 (2004)), and that the Office shall administer 35 U.S.C. 102(c) in a manner consistent with the legislative history of the CREATE Act that was relevant to its administration. *See* 125 Stat. at 287.

35 U.S.C. 102(d) as amended by section 3 of the AIA provides a definition for ''effectively filed'' for purposes of determining whether a patent or application for patent is prior art to a claimed invention. 35 U.S.C. 102(d) provides that for purposes of determining whether a patent or application for patent is prior art to a claimed invention under 35 U.S.C. 102(a)(2), such patent or application shall be considered to have been effectively filed, with respect to any subject matter described in the patent or application on the earliest of: (1) The actual filing date of the patent or the application for patent; or (2) if the patent or application for patent is entitled to claim a right of priority or the benefit of an earlier filing date under 35 U.S.C. 119, 120, 121, or 365 based upon one or more prior filed applications for patent, the filing date of the earliest such application that describes the subject matter. *See* 125 Stat. at 286–87.

The AIA provides a number of definitions for terms used in title 35 of the United States Code. *See* 125 Stat. at 285. The term ''inventor'' means the individual or, if a joint invention, the individuals collectively who invented or discovered the subject matter of the invention, and the terms ''joint inventor'' and ''coinventor'' mean any one of the individuals who invented or discovered the subject matter of a joint invention. 35 U.S.C. 100(f) and (g). The term ''joint research agreement'' means a written contract, grant, or cooperative agreement entered into by two or more persons or entities for the performance of experimental, developmental, or research work in the field of the claimed invention. 35 U.S.C. 100(h). The term ''effective filing date'' for a claimed invention in a patent or application for patent (other than a reissue application or a reissued patent) means the earliest of: (1) The actual filing date of the patent or the application for the patent containing a claim to the invention; or (2) the filing date of the earliest application for which the patent or application is entitled, as to such invention, to a right of priority or the benefit of an earlier filing date under 35 U.S.C. 119, 120, 121, or 365. 35 U.S.C. 100(i)(1). The ''effective filing date'' for a claimed invention in a reissued patent or an application for reissue shall be determined by deeming the claim to the invention to have been contained in the patent for which reissue was sought. 35 U.S.C. 100(i)(2). The term ''claimed invention'' means the subject matter defined by a claim in a patent or an application for a patent. 35 U.S.C. 100(j).

The AIA amends 35 U.S.C. 103 to provide that a patent for a claimed invention may not be obtained, notwithstanding that the claimed invention is not identically disclosed as set forth in 35 U.S.C. 102, if the differences between the claimed invention and the prior art are such that the claimed invention as a whole would have been obvious before the effective filing date of the claimed invention to a person having ordinary skill in the art to which the claimed invention pertains. *See* 125 Stat. at 287. 35 U.S.C. 103 also provides that patentability shall not be negated by the manner in which the invention was made. *See id.*

The AIA eliminates the provisions in 35 U.S.C. 135 for patent interference proceedings and replaces them with patent derivation proceedings. *See* 125 Stat. at 289–90. The Office is implementing the patent derivation proceedings provided for in the AIA in a separate rulemaking (RIN 0651–AC74). The AIA also replaces the interference provisions of 35 U.S.C. 291 with derivation provisions. *See* 125 Stat. at 288–89.

The AIA repeals the provisions of 35 U.S.C. 104 (special provisions for inventions made abroad) and 157 (statutory invention registrations). *See* 125 Stat. at 287. The AIA also makes conforming changes to 35 U.S.C. 111, 119, 120, 134, 145, 146, 154, 172, 202(c), 282, 287, 305, 363, 374, and 375(a). *See* 125 Stat. at 287–88, and 90–91.

The AIA provides that the changes (other than the repeal of 35 U.S.C. 157) in section 3 which are being implemented in this rulemaking take effect on March 16, 2013, and apply to any application for patent, and to any patent issuing thereon, that contains, or contained at any time: (1) A claim to a claimed invention that has an effective filing date as defined in 35 U.S.C. 100(i) that is on or after March 16, 2013; or (2) a specific reference under 35 U.S.C. 120, 121, or 365(c) to any patent or application that contains, or contained at any time, such a claim. *See* 125 Stat. at 293.

The AIA also provides that the provisions of 35 U.S.C. 102(g), 135, and 291 in effect on March 15, 2013, shall apply to each claim of an application for patent, and any patent issued thereon, for which the amendments made by this section also apply, if such application or patent contains, or contained at any time: (1) A claim to an invention having an effective filing date as defined in 35 U.S.C. 100(i) that occurs before March 16, 2013; or (2) a specific reference under 35 U.S.C. 120, 121, or 365(c) to any patent or application that contains, or contained at any time, such a claim. *See id.*

Discussion of Specific Rules: The following is a discussion of the amendments to Title 37 of the Code of Federal Regulations, part 1, that are being proposed in this notice of proposed rulemaking.

Section 1.9: Section 1.9 is proposed to be amended to add the definition of the terms used throughout the rules.

Section 1.9(d)(1) as proposed provides that the term ''inventor'' or ''inventorship'' as used in this chapter means the individual or, if a joint invention, the individuals collectively who invented or discovered the subject matter of the invention. *See* 35 U.S.C. 100(f). While the term ''inventorship'' is not used in 35 U.S.C. 100(f), the term ''inventorship'' is currently used throughout the rules of practice to mean the individual or, if a joint invention, the individuals collectively who invented or discovered the subject matter of the invention. Section 1.9(d)(2) provides that the term ''joint inventor'' or ''coinventor'' as used in this chapter means any one of the individuals who invented or discovered the subject matter of a joint invention. *See* 35 U.S.C. 100(g).

Section 1.9(e) as proposed provides that the term ''joint research agreement'' as used in this chapter means a written contract, grant, or cooperative agreement entered into by two or more persons or entities for the performance of experimental, developmental, or research work in the field of the claimed invention. *See* 35 U.S.C. 100(h).

Section 1.9(f) as proposed provides that the term ''claimed invention'' as used in this chapter means the subject matter defined by a claim in a patent or

an application for a patent. *See* 35 U.S.C. 100(j).

Section 1.53: Section 1.53(j) is proposed to be amended to delete the phrase ''except as provided in 35 U.S.C. 102(e)'' to be consistent with the changes to 35 U.S.C. 102 in the AIA.

Section 1.55: Section 1.55(a)(1) is proposed to be amended to include the requirement in 35 U.S.C. 119(a) that the nonprovisional application must be filed not later than twelve months after the date on which the foreign application was filed, and that this twelve-month period is subject to 35 U.S.C. 21(b) and § 1.7(a). 35 U.S.C. 21(b) and § 1.7(a) provide that when the day, or the last day, for taking any action (e.g., filing a nonprovisional application within twelve months of the date on which the foreign priority application was filed) or paying any fee in the Office falls on Saturday, Sunday, or a Federal holiday within the District of Columbia, the action may be taken, or fee paid, on the next succeeding secular or business day.

Section 1.55(a)(2) is proposed to be amended to include provisions in current § 1.55(a)(1)(i) and to require that the claim for priority and a certified copy of the foreign application be filed in an application under 35 U.S.C. 111(a) (other than a design application) within the later of four months from the actual filing date of the application or sixteen months from the filing date of the prior foreign application. Section 1.55(a)(2) as proposed also requires the claim for priority to be presented in an application data sheet. *See Changes To Implement the Inventor's Oath or Declaration Provisions of the Leahy-Smith America Invents Act,* 77 FR 982, 989–90 (Jan. 6, 2012).

Section 1.55(a)(3) is proposed to be amended to include provisions in current § 1.55(a)(1)(ii) and to require that the claim for priority be made and a certified copy of the foreign application filed within the time limit set forth in the Patent Cooperation Treaty (PCT) and the Regulations under the PCT in an application that entered the national stage from an international application after compliance with 35 U.S.C. 371. Since patent application publications will have a prior art effect as of the earliest priority date (for subject matter disclosed in the priority application) with respect to applications subject to 35 U.S.C. 102, as amended by the AIA, the Office needs to ensure that it has a copy of the priority application by the time of publication. The proposed time period of four months from the actual filing date of the application or sixteen months from the filing date of the prior foreign application is consistent with the international norm for when the certified copy of the foreign application needs to be filed in an application. *See* PCT Rule 17.1(a).

Section 1.55(a)(4) is proposed to be amended to require that if a nonprovisional application filed on or after March 16, 2013, claims the benefit of the filing date of a foreign application filed prior to March 16, 2013, and also contains, or contained at any time, a claim to a claimed invention that has an effective filing date on or after March 16, 2013, the applicant must provide a statement to that effect within the later of four months from the actual filing date of the application, four months from the date of entry into the national stage as set forth in § 1.491 in an international application, sixteen months from the filing date of the prior foreign application, or the date that a first claim to a claimed invention that has an effective filing date on or after March 16, 2013, is presented in the application. Section 1.55(a)(4) is also proposed to be amended to require that if a nonprovisional application filed on or after March 16, 2013, claims the benefit of the filing date of a foreign application filed prior to March 16, 2013, does not contain a claim to a claimed invention that has an effective filing date on or after March 16, 2013, but discloses subject matter not also disclosed in the foreign application, the applicant must provide a statement to that effect within the later of four months from the actual filing date of the later-filed application, four months from the date of entry into the national stage as set forth in § 1.491 in an international application, or sixteen months from the filing date of the prior foreign application.

Proposed § 1.55(a)(4) would not require that the applicant identify how many or which claims in the nonprovisional application have an effective filing date on or after March 16, 2013, or that the applicant identify the subject matter in the nonprovisional application not also disclosed in the foreign application. Proposed § 1.55(a)(4) would require only that the applicant state that there is a claim in the nonprovisional application that has an effective filing date on or after March 16, 2013 (e.g., ''upon reasonable belief, this application contains at least one claim that has an effective filing date on or after March 16, 2013''), or the applicant state that there is subject matter in the nonprovisional application not also disclosed in the foreign application (e.g., ''upon reasonable belief, this application contains subject matter not also disclosed in the foreign application).

If an applicant fails to timely provide such a statement and then later indicates that the nonprovisional application contains a claim having an effective filing date on or after March 16, 2013, or subject matter not also disclosed in the foreign application, the Office may issue a requirement for information under § 1.105 requiring the applicant to identify where (by page and line or paragraph number) there is written description support under AIA 35 U.S.C. 112(a) in the foreign application for the remaining claims in the nonprovisional application. Likewise, if the applicant later seeks to retract a previous statement that the nonprovisional application contains a claim having an effective filing date on or after March 16, 2013, or subject matter not also disclosed in the foreign application, the Office may issue a requirement for information under § 1.105 requiring the applicant to identify where (by page and line or paragraph number) there is written description support under AIA 35 U.S.C. 112(a) in the foreign application for each claim in the nonprovisional application.

This information is needed to assist the Office in determining whether the application is subject to 35 U.S.C. 102 and 103 as amended by the AIA or 35 U.S.C. 102 and 103 in effect on March 15, 2013. If the Office must determine on its own the effective filing date of every claim ever presented in an application filed on or after March 16, 2013, that claims priority to or the benefit of a foreign application filed prior to March 16, 2013, examination costs will significantly increase. This proposed provision is tailored to the transition to 35 U.S.C. 102 and 103 under the AIA. Thus, for a nonprovisional application filed on or after March 16, 2013, that claims the benefit of the filing date of a foreign application, the applicant would not be required to provide any statement if: (1) The nonprovisional application discloses only subject matter also disclosed in a foreign application filed prior to March 16, 2013; or (2) the nonprovisional application claims only the benefit of the filing date of a foreign application filed on or after March 16, 2013.

Section 1.55(c) as proposed contains the provisions regarding waiver of claims for priority and acceptance of unintentionally delayed claims. Section 1.55(c) is proposed to be amended to reference claims for priority under 35 U.S.C. 119(a) through (d) or (f), or 365(a) or 365(b). Section 1.55(c) is proposed to

be amended to require a petition to accept a delayed claim to be accompanied by a certified copy of the foreign application, unless previously submitted. In view of the time period for submitting a certified copy in proposed § 1.55(a), a petition to accept a delayed claim after this time period needs to be accompanied by a certified copy (unless previously submitted).

Section 1.55(d) as proposed contains provisions for the priority document exchange program. *See Changes to Implement Priority Document Exchange Between Intellectual Property Offices,* 72 FR 1664 (Jan. 16, 2007). Sections 1.55(d)(1)(i) and (d)(1)(ii) contain the provisions of current §§ 1.55(d)(1)(i) and (d)(1)(ii), except to also require the claim for priority to be presented in an application data sheet and that the copy of the foreign application is received by the Office within the period set forth in § 1.55(a) or by such later time as may be set by the Office. Section 1.55(d)(1)(iii) is proposed to be amended to remove the sentence that the request should be made within the later of four months from the filing date of the application or sixteen months from the filing date of the foreign application. This sentence is no longer needed since proposed § 1.55(a) requires the certified copy to be filed within the later of four months from the actual filing date of the application or sixteen months from the filing date of the prior foreign application.

Section 1.55(e) as proposed contains the provisions of current § 1.55(a)(2)–(4). In view of the time period in proposed § 1.55(a), the provisions in current § 1.55(a)(2) and (a)(3) are less relevant, but these provisions are still needed to cover situations where the Office is examining an application within four months from the filing date of the application such as an application examined under the Office's Track I prioritized examination program. *See Changes to Implement the Prioritized Examination Track (Track I) of the Enhanced Examination Timing Control Procedures Under the Leahy-Smith America Invents Act,* 76 FR 59050 (Sept. 23, 2011), and *Changes to Implement the Prioritized Examination for Requests for Continued Examination,* 76 FR 78566 (Dec. 19, 2011). Furthermore, even if a petition to accept a delayed claim for priority is filed under § 1.55(c), the claim for priority and the certified copy of the foreign application must still be filed within the pendency of the application and before the patent is granted. Thus, § 1.55(e)(1) as proposed contains the provisions of current § 1.55(a)(2). In addition, § 1.55(e)(2) as proposed continues to permit the Office to require the claim for priority and the certified copy to be submitted earlier than the time period provided in § 1.55(a).

Furthermore, § 1.55(e)(3) as proposed continues to permit the Office to require an English language translation of a non-English language foreign application. Finally, § 1.55(e)(2)(i) and (e)(3)(i) as proposed also reference a derivation proceeding (in addition to an interference) as a situation in which the Office may require the claim for priority and the certified copy, as well as an English language translation, of the foreign application to be submitted earlier.

Section 1.55(f) is proposed to be added to provide that the time periods set forth in § 1.55 are not extendable. The time periods set forth in § 1.55 are currently not extendable. This provision simply avoids the need to separate that the time period is not extendable with respect to each time period set in in § 1.55.

Section 1.71: Section 1.71(g)(1) is proposed to be amended to change 35 U.S.C. 103(c)(2)(C) to 35 U.S.C. 102(c)(3) to be consistent with the changes to 35 U.S.C. 102 and 103 in the AIA, which are described previously in the summary of major changes.

Section 1.77: Section 1.77(b) is proposed to be amended to provide for any statement regarding prior disclosures by the inventor or a joint inventor. Section 1.77(a) sets out a preferred arrangement for a patent application, and § 1.77(b) sets out the preferred arrangement of the specification of a patent application. If the information provided by the applicant in this section of the specification is sufficient to comply with what is required in a § 1.130 affidavit or declaration regarding a prior disclosure (discussed below), then applicant would not need to provide anything further. If, however, the information provided by the applicant in this section of the specification is not sufficient to comply with what is required in such a § 1.130 affidavit or declaration, then the applicant would need to submit the required information in an affidavit or declaration under § 1.130. An applicant is not required to use the format specified in § 1.77 or identify any prior disclosures by the inventor or a joint inventor (unless necessary to overcome a rejection), but identifying any prior disclosures by the inventor or a joint inventor may save applicants (and the Office) the costs related to an Office action and reply and expedite examination of the application.

Section 1.78: Section 1.78 is proposed to be reorganized as follows: (1) § 1.78(a) as proposed contains provisions relating to claims under 35 U.S.C. 119(e) for the benefit of a prior-filed provisional application; (2) § 1.78(b) as proposed contains provisions relating to delayed claims under 35 U.S.C. 119(e) for the benefit of a prior-filed provisional application; (3) § 1.78(c) as proposed contains provisions relating to claims under 35 U.S.C. 120, 121, or 365(c) for the benefit of a prior-filed nonprovisional or international application; (4) § 1.78(d) as proposed contains provisions relating to delayed claims under 35 U.S.C. 120, 121, or 365(c) for the benefit of a prior-filed nonprovisional or international application; (5) § 1.78(e) as proposed contains provisions relating to applications containing conflicting claims; (6) § 1.78(f) as proposed contains provisions relating to applications or patents under reexamination naming different inventors and containing patentably indistinct claims; and (7) § 1.78(g) as proposed provides that the time periods set forth in § 1.78 are not extendable.

Section 1.78(a) as proposed addresses claims under 35 U.S.C. 119(e) for the benefit of a prior-filed provisional application. Under 35 U.S.C. 119(e)(1), a provisional application must disclose the invention claimed in at least one claim of the later-filed application in the manner provided by 35 U.S.C. 112(a) (except for the requirement to disclose the best mode) for the later-filed application to receive the benefit of the filing date of the provisional application. *See New Railhead Mfg., L.L.C.* v. *Vermeer Mfg. Co.,* 298 F.3d 1290, 1294 (Fed. Cir. 2002) (for a nonprovisional application to actually receive the benefit of the filing date of the provisional application, ''the specification of the provisional [application] must 'contain a written description of the invention and the manner and process of making and using it, in such full, clear, concise, and exact terms,' 35 U.S.C. 112 ¶ 1, to enable an ordinarily skilled artisan to practice the invention claimed in the nonprovisional application''). Section 1.78(a), however, as proposed does not also state (as does current § 1.78(a)(4)) that the provisional application must disclose the invention claimed in at least one claim of the later-filed application in the manner provided by 35 U.S.C. 112(a) (except for the requirement to disclose the best mode) because § 1.78 pertains to claims to the benefit of a prior-filed application and the AIA draws a distinction between being entitled to the benefit of a prior-filed application and being entitled to

claim the benefit of a prior-filed application. *See* 157 Cong. Rec. S1370 (2011) (explaining the distinction between being entitled to actual priority or benefit for purposes of 35 U.S.C. 100(i) and being entitled only to claim priority or benefit for purposes of 35 U.S.C. 102(d)). Nevertheless, the prior-filed application must disclose an invention in the manner provided by 35 U.S.C. 112(a) (except for the requirement to disclose the best mode) for the later-filed application to receive the benefit of the filing date of the prior-filed application under 35 U.S.C. 119(e) (or 35 U.S.C. 120) as to such invention, and the prior-filed application must describe the subject matter for the later-filed application to be considered effectively filed under 35 U.S.C. 102(d) on the filing date of the prior-filed application with respect to that subject matter.

Section 1.78(a)(1) as proposed provides that the nonprovisional application or international application designating the United States of America must be filed not later than twelve months after the date on which the provisional application was filed, and that this twelve-month period is subject to 35 U.S.C. 21(b) and 1.7(a). As discussed previously, 35 U.S.C. 21(b) and 1.7(a) provide that when the day, or the last day, for taking any action (e.g., filing a nonprovisional application within twelve months of the date on which the provisional application was filed) or paying any fee in the Office falls on Saturday, Sunday, or a Federal holiday within the District of Columbia, the action may be taken, or fee paid, on the next succeeding secular or business day.

Section 1.78(a)(3) is proposed to be amended to require that if a nonprovisional application filed on or after March 16, 2013, claims the benefit of the filing date of a provisional application filed prior to March 16, 2013, and also contains, or contained at any time, a claim to a claimed invention that has an effective filing date on or after March 16, 2013, the applicant must provide a statement to that effect within the later of four months from the actual filing date of the later-filed application, four months from the date of entry into the national stage as set forth in § 1.491 in an international application, sixteen months from the filing date of the prior-filed provisional application, or the date that a first claim to a claimed invention that has an effective filing date on or after March 16, 2013, is presented in the application. Section 1.78(a)(3) is also proposed to be amended to require that if a nonprovisional application filed on or after March 16, 2013, claims the benefit of the filing date of a provisional application filed prior to March 16, 2013, does not contain a claim to a claimed invention that has an effective filing date on or after March 16, 2013, but discloses subject matter not also disclosed in the provisional application, the applicant must provide a statement to that effect within the later of four months from the actual filing date of the later-filed application, four months from the date of entry into the national stage as set forth in § 1.491 in an international application, or sixteen months from the filing date of the prior-filed provisional application.

Proposed § 1.78(a)(3) would not require that the applicant identify how many or which claims in the nonprovisional application have an effective filing date on or after March 16, 2013, or that the applicant identify the subject matter in the nonprovisional application not also disclosed in the provisional application. Proposed § 1.78(a)(3) would require only that the applicant state that there is a claim in the nonprovisional application that has an effective filing date on or after March 16, 2013 (e.g., ''upon reasonable belief, this application contains at least one claim that has an effective filing date on or after March 16, 2013''), or the applicant state that there is subject matter in the nonprovisional application not also disclosed in the provisional application (e.g., ''upon reasonable belief, this application contains subject matter not also disclosed in provisional application No. XX/XXX,XXX'').

If an applicant fails to timely provide such a statement and then later indicates that the nonprovisional application contains a claim having an effective filing date on or after March 16, 2013, or subject matter not also disclosed in the provisional application, the Office may issue a requirement for information under § 1.105 requiring the applicant to identify where (by page and line or paragraph number) there is written description support under AIA 35 U.S.C. 112(a) in the provisional application for the remaining claims in the nonprovisional application. Likewise, if the applicant later seeks to retract a previous statement that the nonprovisional application contains a claim having an effective filing date on or after March 16, 2013, or subject matter not also disclosed in the provisional application, the Office may issue a requirement for information under § 1.105 requiring the applicant to identify where (by page and line or paragraph number) there is written description support under AIA 35 U.S.C. 112(a) in the provisional application for each claim in the nonprovisional application.

This information is needed to assist the Office in determining whether the application is subject to 35 U.S.C. 102 and 103 as amended by the AIA or 35 U.S.C. 102 and 103 in effect on March 15, 2013. As discussed previously, if the Office must determine on its own the effective filing date of every claim ever presented in an application filed on or after March 16, 2013, that claims priority to or the benefit of a provisional application filed prior to March 16, 2013, examination costs will significantly increase. This proposed provision is tailored to the transition to 35 U.S.C. 102 and 103 under the AIA. Thus, for a nonprovisional application filed on or after March 16, 2013, that claims the benefit of the filing date of a provisional application, the applicant would not be required to provide any statement if: (1) The nonprovisional application discloses only subject matter also disclosed in a provisional application filed prior to March 16, 2013; or (2) the nonprovisional application claims only the benefit of the filing date of a provisional application filed on or after March 16, 2013.

Sections 1.78(a) and (c) as proposed require the reference to each prior-filed application to be included in an application data sheet. *See Changes To Implement the Inventor's Oath or Declaration Provisions of the Leahy-Smith America Invents Act,* 77 FR 982, 993 (Jan. 6, 2012).

Section 1.78(a) as proposed otherwise contains the provisions of current § 1.78(a)(4) and (a)(5).

Section 1.78(b) as proposed contains provisions relating to delayed claims under 35 U.S.C. 119(e) for the benefit of prior-filed provisional applications. Section 1.78(b) contains the provisions of current § 1.78(a)(6).

Section 1.78(c) as proposed contains provisions relating to claims under 35 U.S.C. 120, 121, or 365(c) for the benefit of a prior-filed nonprovisional or international application. Section 1.78(c)(1) as proposed provides that each prior-filed application must name as the inventor or a joint inventor an inventor named in the later-filed application. In addition, each prior-filed application must either be: (1) An international application entitled to a filing date in accordance with PCT Article 11 and designating the United States of America; or (2) a nonprovisional application under 35 U.S.C. 111(a) that is entitled to a filing date as set forth in § 1.53(b) or § 1.53(d) for which the basic filing fee set forth in § 1.16 has been paid within the

pendency of the application (provisions from current § 1.78(a)(1)).

Section 1.78(c) as proposed does not contain a provision that the prior-filed application disclose the invention claimed in at least one claim of the later-filed application in the manner provided by 35 U.S.C. 112(a). For a later-filed application to receive the benefit of the filing date of a prior-filed application, 35 U.S.C. 120 requires that the prior-filed application disclose the invention claimed in at least one claim of the later-filed application in the manner provided by 35 U.S.C. 112(a) (except for the requirement to disclose the best mode). As discussed previously, § 1.78 as proposed pertains to claims to the benefit of a prior-filed application and the AIA draws a distinction between being entitled to the benefit of a prior-filed application and being entitled to claim the benefit of a prior-filed application.

Section 1.78(c)(2) is proposed to be amended to clarify that identifying the relationship of the applications means identifying whether the later-filed application is a continuation, divisional, or continuation-in-part of the prior-filed nonprovisional application or international application. *See* MPEP § 201.11.

Section 1.78(c)(2) is also proposed to be amended to require that if a nonprovisional application filed on or after March 16, 2013, claims the benefit of the filing date of a nonprovisional application filed prior to March 16, 2013, and also contains, or contained at any time, a claim to a claimed invention that has an effective filing date on or after March 16, 2013, the applicant must provide a statement to that effect within the later of four months from the actual filing date of the later-filed application, four months from the date of entry into the national stage as set forth in § 1.491 in an international application, sixteen months from the filing date of the prior-filed nonprovisional application, or the date that a first claim to a claimed invention that has an effective filing date on or after March 16, 2013, is presented in the application. Section 1.78(c)(2) is also proposed to be amended to require that if a nonprovisional application filed on or after March 16, 2013, claims the benefit of the filing date of a nonprovisional application filed prior to March 16, 2013, does not contain a claim to a claimed invention that has an effective filing date on or after March 16, 2013, but discloses subject matter not also disclosed in the prior-filed nonprovisional application, the applicant must provide a statement to that effect within the later of four months from the actual filing date of the later-filed application, four months from the date of entry into the national stage as set forth in § 1.491 in an international application, or sixteen months from the filing date of the prior-filed nonprovisional application.

Proposed § 1.78(c)(2) would not require that the applicant identify how many or which claims in the later-filed nonprovisional application have an effective filing date on or after March 16, 2013, or that the applicant identify the subject matter in the later-filed nonprovisional application not also disclosed in the prior-filed nonprovisional application. Proposed § 1.78(c)(2) would require only that the applicant state that there is a claim in the later-filed nonprovisional application that has an effective filing date on or after March 16, 2013 (e.g., ''upon reasonable belief, this application contains at least one claim that has an effective filing date on or after March 16, 2013''), or the applicant state that there is subject matter in the later-filed nonprovisional application not also disclosed in the prior-filed nonprovisional application (e.g., ''upon reasonable belief, this application contains subject matter not also disclosed in application No. XX/XXX,XXX'').

If an applicant fails to timely provide such a statement and then later indicates that the later-filed nonprovisional application contains a claim having an effective filing date on or after March 16, 2013, or subject matter not also disclosed in the prior-filed nonprovisional application, the Office may issue a requirement for information under § 1.105 requiring the applicant to identify where (by page and line or paragraph number) there is written description support under AIA 35 U.S.C. 112(a) in the prior-filed nonprovisional application for the remaining claims in the later-filed nonprovisional application. Likewise, if the applicant later seeks to retract a previous statement that the later-filed nonprovisional application contains a claim having an effective filing date on or after March 16, 2013, or subject matter not also disclosed in the prior-filed nonprovisional application, the Office may issue a requirement for information under § 1.105 requiring the applicant to identify where (by page and line or paragraph number) there is written description support under AIA 35 U.S.C. 112(a) in the prior-filed nonprovisional application for each claim in the later-filed nonprovisional application.

This information is needed to assist the Office in determining whether the application is subject to 35 U.S.C. 102 and 103 as amended by the AIA or 35 U.S.C. 102 and 103 in effect on March 15, 2013. As discussed previously, if the Office must determine on its own the effective filing date of every claim ever presented in an application filed on or after March 16, 2013, that claims priority to or the benefit of a nonprovisional application filed prior to March 16, 2013, examination costs will significantly increase. This proposed provision is tailored to the transition to 35 U.S.C. 102 and 103 under the AIA. Thus, for a nonprovisional application filed on or after March 16, 2013, that claims the benefit of the filing date of a nonprovisional application, the applicant would not be required to provide any statement if: (1) The nonprovisional application discloses only subject matter also disclosed in a prior-filed nonprovisional application filed prior to March 16, 2013; or (2) the nonprovisional application claims only the benefit of the filing date of a nonprovisional application filed on or after March 16, 2013.

Sections 1.78(c)(3) through (c)(5) as proposed contain the provisions of current § 1.78(a)(2). Section 1.78(c)(5) as proposed also provides that cross-references to applications for which a benefit is not claimed must not be included in an application data sheet (§ 1.76(b)(5)). Including cross-references to applications for which a benefit is not claimed in the application data sheet may lead the Office to inadvertently schedule the application for publication under 35 U.S.C. 122(b) and § 1.211 *et seq.* on the basis of the cross-referenced applications having the earliest filing date.

Section 1.78(d) as proposed contains provisions relating to delayed claims under 35 U.S.C. 120, 121, or 365(c) for the benefit of prior-filed nonprovisional or international applications. Section 1.78(d) as proposed contains the provisions of current § 1.78(a)(3).

Section 1.78(e) as proposed contains the provisions of current § 1.78(b) pertaining to applications containing conflicting claims.

Section 1.78(f) as proposed addresses applications or patents under reexamination that name different inventors and contain patentably indistinct claims. The provisions are similar to the provisions of current § 1.78(c), but the language has been amended to refer to ''the effective filing date of the later claimed invention'' in place of ''at the time the later invention was made'' in view of the change to a first inventor to file system.

Section 1.78(g) as proposed provides that the time periods set forth in § 1.78 are not extendable.

Sections 1.53 and 1.76 would be amended for consistency with the reorganization of § 1.78.

Section 1.104: Section 1.104(c)(4) is proposed to be amended to include the provisions that pertain to commonly owned or joint research agreement subject matter for applications subject to 35 U.S.C. 102 and 103 as amended by the AIA. Specifically, § 1.104(c)(4) as proposed implements the provisions of 35 U.S.C. 102(b)(2)(C) and 35 U.S.C. 102(c) in the AIA. Thus, § 1.104(c)(4) as proposed is applicable to applications that are subject to 35 U.S.C. 102 and 103 as amended by the AIA.

Section 1.104(c)(4)(i) as proposed provides that subject matter that qualifies as prior art under 35 U.S.C. 102(a)(2) and a claimed invention will be treated as commonly owned for purposes of 35 U.S.C. 102(b)(2)(C) if the applicant provides a statement that the prior art and the claimed invention, not later than the effective filing date of the claimed invention, were owned by the same person or subject to an obligation of assignment to the same person.

Section 1.104(c)(4)(ii) as proposed addresses joint research agreements and provides that subject matter that qualifies as prior art under 35 U.S.C. 102(a)(2) and a claimed invention will be treated as commonly owned for purposes of 35 U.S.C. 102(b)(2)(C) on the basis of a joint research agreement under 35 U.S.C. 102(c) if: (1) The applicant provides a statement that the prior art was developed and the claimed invention was made by or on behalf of one or more parties to a joint research agreement, within the meaning of 35 U.S.C. 100(h) and § 1.9(e), that was in effect on or before the effective filing date of the claimed invention, and the claimed invention was made as a result of activities undertaken within the scope of the joint research agreement; and (2) the application for patent for the claimed invention discloses or is amended to disclose the names of the parties to the joint research agreement.

Section 1.104(c)(5) is proposed to be amended to include the provisions that pertain to commonly owned or joint research agreement subject matter for applications subject to 35 U.S.C. 102 and 103 in effect prior to the effective date of section 3 of the AIA. Thus, § 1.104(c)(5) as proposed is applicable to applications that are subject to 35 U.S.C. 102 and 103 in effect prior to March 16, 2013.

Section 1.104(c)(5)(i) as proposed provides that subject matter which qualifies as prior art under 35 U.S.C. 102(e), (f), or (g) in effect prior to March 16, 2013, and a claimed invention in an application or a patent granted on or after December 10, 2004, will be treated as commonly owned for purposes of 35 U.S.C. 103(c) in effect prior to March 16, 2013, if the applicant provides a statement to the effect that the prior art and the claimed invention, at the time the claimed invention was made, were owned by the same person or subject to an obligation of assignment to the same person.

Section 1.104(c)(5)(ii) as proposed addresses joint research agreements and provides that subject matter which qualifies as prior art under 35 U.S.C. 102(e), (f), or (g) in effect prior to March 16, 2013, and a claimed invention in an application or a patent granted on or after December 10, 2004, will be treated as commonly owned for purposes of 35 U.S.C. 103(c) in effect prior to March 16, 2013, on the basis of a joint research agreement under 35 U.S.C. 103(c)(2) in effect prior to March 16, 2013 if: (1) the applicant provides a statement to the effect that the prior art and the claimed invention were made by or on behalf of the parties to a joint research agreement, within the meaning of 35 U.S.C. 100(h) and § 1.9(e), that was in effect on or before the date the claimed invention was made, and that the claimed invention was made as a result of activities undertaken within the scope of the joint research agreement; and (2) the application for patent for the claimed invention discloses or is amended to disclose the names of the parties to the joint research agreement. Section 1.104(c)(5)(ii) as proposed makes reference to the definition of joint research agreement contained in 35 U.S.C. 100(h) and § 1.9(e). The AIA did not change the definition of a joint research agreement, but merely moved the definition from 35 U.S.C. 103(c)(3) to 35 U.S.C. 100(h). Thus, the Office proposes to reference the definition of joint research agreement in 35 U.S.C. 100(h) in § 1.104(c)(5)(ii) for simplicity.

Section 1.104(c)(6) is proposed to be added to clarify that patents issued prior to December 10, 2004, from applications filed prior to November 29, 1999, are subject to 35 U.S.C. 103(c) in effect on November 28, 1999. *See* MPEP § 706.02(l).

The provisions of current § 1.104(c)(5) pertain to statutory invention registrations and are thus proposed to be removed. See discussion of the provisions of §§ 1.293 through 1.297.

Section 1.109: Section 1.109 is proposed to be added to specify the effective filing date of a claimed invention. Section 1.109(a) as proposed provides that the effective filing date of a claimed invention in a patent or an application for patent, other than in a reissue application or reissued patent, is the earliest of: (1) The actual filing date of the patent or the application for the patent containing a claim to the invention; or (2) the filing date of the earliest application for which the patent or application is entitled, as to such invention, to priority to or the benefit of an earlier filing date under 35 U.S.C. 119, 120, 121, or 365. *See* 35 U.S.C. 100(i)(1). Section 1.109(b) as proposed provides that the effective filing date for a claimed invention in a reissue application or a reissued patent is determined by deeming the claim to the invention to have been contained in the patent for which reissue was sought. *See* 35 U.S.C. 100(i)(2).

Section 1.110: Section 1.110 as proposed provides that the Office may require information concerning the inventorship and ownership of the subject matter of each claim when necessary for an Office proceeding. Section 1.110 is proposed to be amended to: (1) Change the ownership inquiry to ownership on the effective filing date rather than ownership on the date of invention; and (2) eliminate the provision concerning inquiring into the date of invention of the subject matter of the claims. Section 1.110 as proposed to be amended provides that when more than one inventor is named in an application or patent, the Office may require an applicant or patentee to identify the inventor, and ownership on the effective filing date, of each claimed invention in the application or patent, when necessary for purposes of an Office proceeding.

Section 1.130: Section 1.130 is proposed to be amended to replace its existing provisions (which are proposed to be moved to § 1.131) with provisions for showing attribution of a disclosure to an inventor or joint inventor, prior disclosure, or derivation under 35 U.S.C. 102(b) as amended by the AIA. Thus, § 1.130 as proposed would apply to applications for patent (and patents issuing thereon) that are subject to 35 U.S.C. 102 as amended by the AIA, and § 1.131 would apply to applications for patent (and patents issuing thereon) that are subject to 35 U.S.C. 102 in effect on March 15, 2013 (prior to the effective date of section 3 of the AIA).

Section 1.130(a) as proposed provides a mechanism for filing an affidavit or declaration to establish that a disclosure is not prior art in accordance with 35 U.S.C. 102(b) as amended by the AIA. Proposed § 1.130, like §§ 1.131 and 1.132, provides a mechanism for the submission of evidence to disqualify a disclosure as prior art or otherwise

traverse a rejection. An applicant's or patent owner's compliance with § 1.130 means that the applicant or patent owner is entitled to have the evidence considered in determining the patentability of the claim(s) at issue. It does not mean that the applicant or patent owner is entitled as a matter of right to have the rejection of or objection to the claim(s) withdrawn. *See Changes to Implement the Patent Business Goals,* 65 FR 54603, 54640 (Sept. 8, 2000) (discussing procedural nature of §§ 1.131 and 1.132).

Section 1.130(a)(1) as proposed provides for the situation in which: (1) The disclosure on which the rejection is based was by the inventor or joint inventor; or (2) there was a public disclosure of the subject matter on which the rejection is based by the inventor or a joint inventor prior to the disclosure of the subject matter on which the rejection is based or the date the patent or application on which the rejection is based was effectively filed.

Section 1.130(a)(2) as proposed provides for the situation in which: (1) The disclosure on which the rejection is based was by a party who obtained the subject matter disclosed directly or indirectly from the inventor or a joint inventor; or (2) the subject matter disclosed had been publicly disclosed by a party who obtained the subject matter disclosed directly or indirectly from the inventor prior to the disclosure of the subject matter on which the rejection is based or the date the patent or application on which the rejection is based was effectively filed.

Section 1.130(b) as proposed pertains to affidavits or declarations under § 1.130(a)(1) in the situation in which the disclosure on which the rejection is based was by the inventor or joint inventor. Section 1.130(b) as proposed provides that if the disclosure on which the rejection is based is by the inventor or a joint inventor, the affidavit or declaration under § 1.130(a)(1) must provide a satisfactory showing that the inventor or a joint inventor is in fact the inventor of the subject matter of the disclosure. The applicant or patent owner must provide a satisfactory showing that the inventor or a joint inventor is the actual inventor of the subject matter of the disclosure. *See In re Katz,* 687 F.2d 450, 455 (CCPA 1982). Where the authorship of the reference disclosure includes the inventor or a joint inventor named in the application, an ''unequivocal'' statement from the inventor or a joint inventor that he/she (or some specific combination of named inventors) invented the subject matter of the disclosure, accompanied by a reasonable explanation of the presence of additional authors, may be acceptable in the absence of evidence to the contrary. *See In re DeBaun,* 687 F.2d 459, 463 (CCPA 1982). However, a mere statement from the inventor or a joint inventor may not be sufficient where there is evidence to the contrary. *See Ex parte Kroger,* 218 USPQ 370 (Bd. App. 1982) (rejection affirmed notwithstanding declarations by the alleged actual inventors as to their inventorship in view of a nonapplicant author submitting a letter declaring the nonapplicant author's inventorship). This is similar to the current process for disqualifying a publication as not being by ''others'' discussed in MPEP § 2132.01, except that 35 U.S.C. 102(b)(1) requires only that the disclosure be by the inventor or a joint inventor.

Section 1.130(c) as proposed pertains to affidavits or declarations under § 1.130(a)(1) in the situation in which the disclosure on which the rejection is based is not by the inventor or a joint inventor, and thus the applicant or patent owner is attempting to overcome the rejection by showing an earlier public disclosure of the subject matter on which the rejection is based by the inventor or a joint inventor. Section 1.130(c) as proposed provides that in this situation the affidavit or declaration must identify and provide the date of the earlier disclosure of the subject matter by the inventor or a joint inventor and provide a satisfactory showing that the inventor or a joint inventor is the inventor of the subject matter of the earlier disclosure. Section 1.130(c) as proposed also provides that if the earlier disclosure was a printed publication, the affidavit or declaration must be accompanied by a copy of the printed publication. Section 1.130(c) as proposed further provides that if the earlier disclosure was not a printed publication, the affidavit or declaration must describe the disclosure with sufficient detail and particularity to determine that the disclosure is a public disclosure of the subject matter on which the rejection is based. The Office needs these details to determine not only whether the inventor is entitled to disqualify the disclosure under 35 U.S.C. 102(b), but also because if the rejection is based upon a U.S. patent application publication or WIPO published application of another application and such other application is also pending before the Office, this prior disclosure may be prior art under 35 U.S.C. 102(a) to the other application and the Office may need this information to avoid granting two patents on the same invention.

Section 1.130(d) as proposed pertains to affidavits or declarations under § 1.130(a)(2) in the situation in which the disclosure on which the rejection is based was by a party who obtained the subject matter disclosed directly or indirectly from the inventor or a joint inventor. Section 1.130(d) as proposed provides that if the disclosure on which the rejection is based is by a party who obtained the subject matter disclosed directly or indirectly from the inventor, an affidavit or declaration under § 1.130(a)(2) (alleging derivation) must provide a satisfactory showing that the inventor or a joint inventor is the inventor of the subject matter of the disclosure and directly or indirectly communicated the subject matter of the disclosure to the party. Specifically, the applicant or patent owner must show that a named inventor actually invented the subject matter of the disclosure. *See In re Facius,* 408 F.2d 1396, 1407 (CCPA 1969). The applicant or patent owner must also show a direct or indirect communication of the subject matter of the disclosure to the party sufficient to enable one of ordinary skill in the art to make the subject matter of the claimed invention. *See Gambro Lundia AB* v. *Baxter Healthcare Corp.,* 110 F.3d 1573, 1577 (Fed. Cir. 1997). This is similar to the current process for disqualifying a publication as being derived from the inventor discussed in MPEP § 2137.

Section 1.130(e) as proposed pertains to affidavits or declarations under § 1.130(a)(2) in the situation in which the disclosure on which the rejection is based is not by a party who obtained the subject matter disclosed directly or indirectly from the inventor or a joint inventor, and thus the applicant or patent owner is attempting to overcome the rejection by showing an earlier public disclosure of the subject matter on which the rejection is based by a party who obtained the subject matter disclosed directly or indirectly from the inventor or a joint inventor. Section 1.130(e) as proposed provides that in this situation an affidavit or declaration under § 1.130(a)(2) must identify and provide the date of the earlier disclosure of the subject matter by the party who obtained the subject matter disclosed directly or indirectly from the inventor or a joint inventor and must also provide a satisfactory showing that the inventor or a joint inventor is the inventor of the subject matter of the earlier disclosure and directly or indirectly communicated the subject matter of the disclosure to the party. Section 1.130(e) as proposed also provides that if the earlier disclosure was a printed publication, the affidavit

or declaration must be accompanied by a copy of the printed publication. Section 1.130(c) as proposed further provides that if the earlier disclosure was not a printed publication, the affidavit or declaration must describe the disclosure with sufficient detail and particularity to determine that the disclosure is a public disclosure of the subject matter on which the rejection is based. This is the same requirement as in § 1.130(c).

Section 1.130 as proposed does not contain a provision that ''[o]riginal exhibits of drawings or records, or photocopies thereof, must accompany and form part of the affidavit or declaration or their absence must be satisfactorily explained'' (*cf.* § 1.131(b)), because in some situations an affidavit or declaration under § 1.130 does not necessarily need to be accompanied by such exhibits (e.g., a statement by the inventor may be sufficient). However, in situations where evidence is required, such exhibits must accompany an affidavit or declaration under § 1.130. In addition, an affidavit or declaration under § 1.130 must be accompanied by any exhibits that the applicant or patent owner wishes to rely upon.

Section 1.130(f) as proposed provides that the provisions of § 1.130 are not available if the rejection is based upon a disclosure made more than one year before the effective filing date of the claimed invention. This provision is because a disclosure made more than one year before the effective filing date of the claimed invention is prior art under 35 U.S.C. 102(a)(1), and may not be disqualified under 35 U.S.C. 102(b)(1). Note that the provisions of § 1.130 are available to establish that a rejection under 35 U.S.C. 102(a)(2) is based on an application or patent that was effectively filed more than one year before the effective filing date of the application under examination, but not publicly disclosed more than one year before such effective filing date, where the subject matter disclosed was obtained directly or indirectly from the inventor or a joint inventor. As stated previously, if the application or patent was published more than one year before the effective filing date of the application under examination, the applicant would not be able to remove the reference as prior art under 35 U.S.C. 102(a)(1).

Section 1.130(f) as proposed also provides that the Office may require the applicant to file a petition for a derivation proceeding pursuant to § 42.401 *et seq.* of this title if the rejection is based upon a U.S. patent or U.S. patent application publication of a patented or pending application naming another inventor and the patent or pending application claims an invention that is the same or substantially the same as the applicant's claimed invention. Thus, the Office would not require the applicant to file a petition for a derivation proceeding if the rejection is based upon a disclosure other than a U.S. patent or U.S. patent application publication (such as nonpatent literature or a foreign patent document), and would not require the applicant to file a petition for a derivation proceeding if the rejection is based upon a U.S. patent or U.S. patent application and the patent or pending application did not claim an invention that is the same or substantially the same as the applicant's claimed invention.

Section 1.130(g) as proposed provides that the provisions of § 1.130 apply to applications for patent, and to any patent issuing thereon, that is subject to 35 U.S.C. 102 as amended by the AIA.

Section 1.131: The title of § 1.131 is proposed to be amended to also cover the provisions of current § 1.130.

Section 1.131(a) is proposed to be amended to refer to 35 U.S.C. 102(e) as 35 U.S.C. 102(e) in effect on March 15, 2013.

Section 1.131(b) is proposed to be amended to provide that the showing of facts provided for in § 1.131(b) is applicable to an oath or declaration under § 1.131(a).

Section 1.131(c) is proposed to be added to include the current provisions of § 1.130, but revised to refer to 35 U.S.C. 102(b) as 35 U.S.C. 102(b) in effect on March 15, 2013, and to refer to 35 U.S.C. 104 as 35 U.S.C. 104 in effect on March 15, 2013.

Section 1.131(d) is proposed to be added to provide that the provisions of § 1.131 apply to applications for patent, and to any patent issuing thereon, that contains, or contained at any time: (1) A claim to a claimed invention that has an effective filing date as defined in 35 U.S.C. 100(i) that is before March 16, 2013; or (2) a specific reference under 35 U.S.C. 120, 121, or 365(c) to any patent or application that contains, or contained at any time, a claim to a claimed invention that has an effective filing date as defined in 35 U.S.C. 100(i) that is before March 16, 2013.

Section 1.131(e) is proposed to be added to provide that, in an application for patent to which the provisions of § 1.130 apply, and to any patent issuing thereon, the provisions of § 1.131 are applicable only with respect to a rejection under 35 U.S.C. 102(g) in effect on March 15, 2013. Section 1.130(g) as proposed provides that the provisions of § 1.130 apply to applications for patent, and to any patent issuing thereon, that is subject to 35 U.S.C. 102 as amended by the AIA. The date of invention is not relevant under the 35 U.S.C. 102 as amended by the AIA. Thus, in an application for patent to which the provisions of § 1.130 apply, and to any patent issuing thereon, a prior art disclosure under 35 U.S.C. 102 as amended by the AIA could not be disqualified or antedated under the provisions of § 1.131 by showing that the inventor previously invented the claimed subject matter.

Sections 1.293 through 1.297: The AIA repeals the provisions of 35 U.S.C. 157 pertaining to statutory invention registrations. Thus, the statutory invention registration provisions of §§ 1.293 through 1.297 are proposed to be removed. The Office would also amend the rules of practice (e.g., §§ 1.17, 1.53, 1.84, 1.103, and 1.104) to delete any reference to a statutory invention registration.

Section 1.321: Section 1.321(d) is proposed to be amended to change 35 U.S.C. 103(c) to 35 U.S.C. 102(c) to be consistent with the changes to 35 U.S.C. 102 and 103 as amended by the AIA.

Rulemaking Considerations

A. Administrative Procedure Act: The changes being proposed in this notice do not change the substantive criteria of patentability. These proposed changes involve rules of agency practice and procedure and/or interpretive rules. *See Bachow Commc'ns Inc.* v. *FCC,* 237 F.3d 683, 690 (DC Cir. 2001) (rules governing an application process are procedural under the Administrative Procedure Act); *Inova Alexandria Hosp.* v. *Shalala,* 244 F.3d 342, 350 (4th Cir. 2001) (rules for handling appeals were procedural where they did not change the substantive standard for reviewing claims); *Nat'l Org. of Veterans' Advocates* v. *Sec'y of Veterans Affairs,* 260 F.3d 1365, 1375 (Fed. Cir. 2001) (rule that clarifies interpretation of a statute is interpretive).

Accordingly, prior notice and opportunity for public comment are not required pursuant to 5 U.S.C. 553(b) or (c) (or any other law). *See Cooper Techs. Co.* v. *Dudas,* 536 F.3d 1330, 1336–37 (Fed. Cir. 2008) (stating that 5 U.S.C. 553, and thus 35 U.S.C. 2(b)(2)(B), does not require notice and comment rulemaking for ''interpretative rules, general statements of policy, or rules of agency organization, procedure, or practice'') (quoting 5 U.S.C. 553(b)(A)). The Office, however, is publishing these proposed changes as it seeks the benefit of the public's views on the Office's proposed implementation of these provisions of the AIA.

B. Regulatory Flexibility Act: As prior notice and an opportunity for public comment are not required pursuant to 5 U.S.C. 553 or any other law, neither a regulatory flexibility analysis nor a certification under the Regulatory Flexibility Act (5 U.S.C. 601 *et seq.*) is required. *See* 5 U.S.C. 603.

Nevertheless, for the reasons set forth herein, the Deputy General Counsel for General Law of the United States Patent and Trademark Office has certified to the Chief Counsel for Advocacy of the Small Business Administration that changes proposed in this notice will not have a significant economic impact on a substantial number of small entities. *See* 5 U.S.C. 605(b). As discussed previously, the Office is proposing the following changes to address the examination issues raised by the changes in section 3 of the AIA.

The Office is providing for the submission of affidavits or declarations showing that: (1) A disclosure upon which a claim rejection is based was by the inventor or joint inventor or by a party who obtained the subject matter disclosed directly or indirectly from the inventor or a joint inventor; or (2) there was a prior public disclosure by the inventor or a joint inventor or another who obtained the subject matter disclosed directly or indirectly from the inventor or a joint inventor of an application. The requirements of these proposed provisions are comparable to the current requirements for affidavits and declarations under 37 CFR 1.131 and 1.132 for an applicant to show that a prior art disclosure is the applicant's own work (see case law cited in MPEP § 2132.01) or that a disclosure was derived from the applicant (see case law cited in MPEP § 2137). In addition, the changes proposed in this notice would not result in additional small entities being subject to the need to submit such an affidavit or declaration.

The Office is also proposing to require that the certified copy of the foreign application be filed within the later of four months from the actual filing date of the application or sixteen months from the filing date of the prior foreign application. An applicant is currently required to file the certified copy of the foreign application when deemed necessary by the examiner, but no later than the date the patent is granted (37 CFR 1.55(a)). The proposed time period of four months from the actual filing date of the application or sixteen months from the filing date of the prior foreign application should not have a significant economic impact as sixteen months from the filing date of the prior foreign application is the international norm for when the certified copy of the foreign application needs to be filed in an application (PCT Rule 17). Based upon the data in the Office's Patent Application Locating and Monitoring (PALM) system, 354,248 (98,902 small entity) nonprovisional applications were filed in FY 2011. Of these, 69,733 (7,943 small entity) nonprovisional applications claimed the benefit of a foreign priority application, and 65,900 (15,031 small entity) nonprovisional applications resulted from the entry of an international application into the national stage.

The Office is also proposing the following requirements for nonprovisional applications filed on or after March 16, 2013, that claim the benefit of the filing date of a foreign, provisional, or nonprovisional application filed prior to March 16, 2013: (1) If such a nonprovisional application contains at any time a claim to a claimed invention that has an effective filing date on or after March 16, 2013, the applicant must provide a statement to that effect within the later of four months from the actual filing date of the later-filed application, four months from the date of entry into the national stage in an international application, sixteen months from the filing date of the prior-filed application, or the date that a first claim to a claimed invention that has an effective filing date on or after March 16, 2013, is presented in the application; and (2) if such a nonprovisional application does not contain a claim to a claimed invention that has an effective filing date on or after March 16, 2013, but discloses subject matter not also disclosed in the foreign, provisional, or nonprovisional application, the applicant must provide a statement to that effect within the later of four months from the actual filing date of the later-filed application, four months from the date of entry into the national stage in an international application, or sixteen months from the filing date of the prior-filed application.

Based upon the data in the Office's PALM system, of the 354,248 (98,902 small entity) nonprovisional applications filed in FY 2011, 11,557 (6,833 small entity) nonprovisional applications were identified as continuation-in-part applications, 47,380 (12,444 small entity) nonprovisional applications were identified as continuation applications, 21,943 (4,934 small entity) nonprovisional applications were identified as divisional applications, and 55,492 (27,367 small entity) nonprovisional applications claimed the benefit of provisional application. As discussed above, 69,733 (7,943 small entity) nonprovisional applications claimed the benefit of a foreign priority application, and 65,900 (15,031 small entity) nonprovisional applications resulted from the entry of an international application into the national stage. The Office's experience is that the majority of nonprovisional applications that claim the benefit of the filing date of a foreign, provisional, or nonprovisional application do not disclose or claim subject matter not also disclosed in the foreign, provisional, or nonprovisional application, but the Office generally makes such determinations only when necessary to the examination of the nonprovisional application. *See, e.g.,* MPEP § 201.08 (''Unless the filing date of the earlier nonprovisional application is actually needed, for example, in the case of an interference or to overcome a reference, there is no need for the Office to make a determination as to whether the requirement of 35 U.S.C. 120, that the earlier nonprovisional application discloses the invention of the second application in the manner provided by the first paragraph of 35 U.S.C. 112, is met and whether a substantial portion of all of the earlier nonprovisional application is repeated in the second application in a continuation-in-part situation''). In any event, Office staff with experience and expertise in a wide range of patent prosecution matters as patent practitioners estimate that this will require, on average, an additional two hours for a practitioner who drafted the later-filed application (including the claims) and is familiar with the prior foreign, provisional, or nonprovisional application.

Accordingly, the changes proposed in this notice will not have a significant economic impact on a substantial number of small entities.

C. Executive Order 12866 (Regulatory Planning and Review): This rulemaking has been determined to be significant for purposes of Executive Order 12866 (Sept. 30, 1993).

D. Executive Order 13563 (Improving Regulation and Regulatory Review): The Office has complied with Executive Order 13563. Specifically, the Office has, to the extent feasible and applicable: (1) Made a reasoned determination that the benefits justify the costs of the rule; (2) tailored the rule to impose the least burden on society consistent with obtaining the regulatory objectives; (3) selected a regulatory approach that maximizes net benefits; (4) specified performance objectives; (5) identified and assessed available alternatives; (6) involved the public in an open exchange of information and perspectives among experts in relevant

disciplines, affected stakeholders in the private sector, and the public as a whole, and provided on-line access to the rulemaking docket; (7) attempted to promote coordination, simplification, and harmonization across government agencies and identified goals designed to promote innovation; (8) considered approaches that reduce burdens and maintain flexibility and freedom of choice for the public; and (9) ensured the objectivity of scientific and technological information and processes.

E. Executive Order 13132 (Federalism): This rulemaking does not contain policies with federalism implications sufficient to warrant preparation of a Federalism Assessment under Executive Order 13132 (Aug. 4, 1999).

F. Executive Order 13175 (Tribal Consultation): This rulemaking will not: (1) Have substantial direct effects on one or more Indian tribes; (2) impose substantial direct compliance costs on Indian tribal governments; or (3) preempt tribal law. Therefore, a tribal summary impact statement is not required under Executive Order 13175 (Nov. 6, 2000).

G. Executive Order 13211 (Energy Effects): This rulemaking is not a significant energy action under Executive Order 13211 because this rulemaking is not likely to have a significant adverse effect on the supply, distribution, or use of energy. Therefore, a Statement of Energy Effects is not required under Executive Order 13211 (May 18, 2001).

H. Executive Order 12988 (Civil Justice Reform): This rulemaking meets applicable standards to minimize litigation, eliminate ambiguity, and reduce burden as set forth in sections 3(a) and 3(b)(2) of Executive Order 12988 (Feb. 5, 1996).

I. *Executive Order 13045 (Protection of Children):* This rulemaking does not concern an environmental risk to health or safety that may disproportionately affect children under Executive Order 13045 (Apr. 21, 1997).

J. Executive Order 12630 (Taking of Private Property): This rulemaking will not effect a taking of private property or otherwise have taking implications under Executive Order 12630 (Mar. 15, 1988).

K. Congressional Review Act: Under the Congressional Review Act provisions of the Small Business Regulatory Enforcement Fairness Act of 1996 (5 U.S.C. 801 *et seq.*), prior to issuing any final rule, the United States Patent and Trademark Office will submit a report containing the final rule and other required information to the United States Senate, the United States House of Representatives, and the Comptroller General of the Government Accountability Office. The changes in this notice are not expected to result in an annual effect on the economy of 100 million dollars or more, a major increase in costs or prices, or significant adverse effects on competition, employment, investment, productivity, innovation, or the ability of United States-based enterprises to compete with foreign-based enterprises in domestic and export markets. Therefore, this notice is not expected to result in a ''major rule'' as defined in 5 U.S.C. 804(2).

L. Unfunded Mandates Reform Act of 1995: The changes set forth in this notice do not involve a Federal intergovernmental mandate that will result in the expenditure by State, local, and tribal governments, in the aggregate, of 100 million dollars (as adjusted) or more in any one year, or a Federal private sector mandate that will result in the expenditure by the private sector of 100 million dollars (as adjusted) or more in any one year, and will not significantly or uniquely affect small governments. Therefore, no actions are necessary under the provisions of the Unfunded Mandates Reform Act of 1995. *See* 2 U.S.C. 1501 *et seq.*

M. National Environmental Policy Act: This rulemaking will not have any effect on the quality of the environment and is thus categorically excluded from review under the National Environmental Policy Act of 1969. *See* 42 U.S.C. 4321 *et seq.*

N. National Technology Transfer and Advancement Act: The requirements of section 12(d) of the National Technology Transfer and Advancement Act of 1995 (15 U.S.C. 272 note) are not applicable because this rulemaking does not contain provisions which involve the use of technical standards.

O. Paperwork Reduction Act: The Paperwork Reduction Act of 1995 (44 U.S.C. 3501 *et seq.*) requires that the Office consider the impact of paperwork and other information collection burdens imposed on the public. This rulemaking involves information collection requirements which are subject to review by the Office of Management and Budget (OMB) under the Paperwork Reduction Act of 1995 (44 U.S.C. 3501–3549). The collection of information involved in this notice has been submitted to OMB under OMB control number 0651–00xx. The collection of information submitted to OMB under OMB control number 0651–00xx also includes information collections (e.g., affidavits and declarations under 37 CFR 1.130, 1.131, and 1.132) previously approved and currently being reviewed under OMB control number 0651–0031. The proposed collection will be available at OMB's Information Collection Review Web site (*www.reginfo.gov/public/do/PRAMain*).

Title of Collection: Matters Related to First Inventor to File.

OMB Control Number: 0651–00xx.

Needs and Uses: This information collection is necessary so that patent applicants and/or patentees may: (1) Provide a statement if a nonprovisional application filed on or after March 16, 2013, claims the benefit of the filing date of a foreign, provisional, or nonprovisional application filed prior to March 16, 2013, and also contains, or contained at any time, a claim to a claimed invention that has an effective filing date on or after March 16, 2013; (2) provide a statement if a nonprovisional application filed on or after March 16, 2013, claims the benefit of the filing date of a foreign, provisional, or nonprovisional application filed prior to March 16, 2013, does not contain a claim to a claimed invention that has an effective filing date on or after March 16, 2013, but discloses subject matter not also disclosed in the foreign, provisional, or nonprovisional application; (3) identify the inventor, and ownership on the effective filing date, of each claimed invention in an application or patent with more than one named inventor, when necessary for purposes of an Office proceeding; and (4) show that a disclosure was by the inventor or joint inventor, or was by a party who obtained the subject matter from the inventor or a joint inventor, or that there was a prior public disclosure by the inventor or a joint inventor, or by a party who obtained the subject matter from the inventor or a joint inventor.

The Office will use the statement that a nonprovisional application filed on or after March 16, 2013, that claims the benefit of the filing date of a foreign, provisional, or nonprovisional application filed prior to March 16, 2013, contains, or contained at any time, a claim to a claimed invention that has an effective filing date on or after March 16, 2013, to readily determine whether the nonprovisional application is subject to the changes to 35 U.S.C. 102 and 103 in the AIA. The Office will also use the statement that a nonprovisional application filed on or after March 16, 2013, that claims the benefit of the filing date of a foreign, provisional, or nonprovisional application filed prior to March 16, 2013, does not contain a claim to a claimed invention that has an effective filing date on or after March 16, 2013, but discloses subject matter

not also disclosed in the foreign, provisional, or nonprovisional application (or lack of such a statement) to readily determine whether the nonprovisional application is subject to the changes to 35 U.S.C. 102 and 103 in the AIA. The Office will use the identification of the inventor, and ownership on the effective filing date, when it is necessary to determine whether a U.S. patent or U.S. patent application publication resulting from another nonprovisional application qualifies as prior art under 35 U.S.C. 102(a)(2). The Office will use information concerning whether a disclosure was by the inventor or joint inventor, or was by a party who obtained the subject matter from the inventor or a joint inventor, or that there was a prior public disclosure by the inventor or a joint inventor, or by a party who obtained the subject matter from the inventor or a joint inventor, to determine whether the disclosure qualifies as prior art under 35 U.S.C. 102(a)(1) or (a)(2).

Method of Collection: By mail, facsimile, hand delivery, or electronically to the Office.

Affected Public: Individuals or households; businesses or other for-profits; and not-for-profit institutions.

Estimated Number of Respondents: 189,150 responses per year.

Estimated Time per Response: The Office estimates that the responses in this collection will take the public from 1 to 10 hours. Specifically, the Office estimates that: (1) Preparing an affidavit or declaration under 37 CFR 1.130, 1.131, or 1.132 will require, on average, 10 hours; (2) identifying under 37 CFR 1.55(a)(4), 1.78(a)(3), or 1.78(c)(2) whether there is any claim or subject matter not disclosed in the prior foreign, provisional, or nonprovisional application will require, on average, 2 hours; and (3) identifying under 37 CFR 1.110 inventorship and ownership of the subject matter of claims will require, on average, 2 hours.

Estimated Total Annual Respondent Burden Hours: 778,300 hours per year.

Estimated Total Annual Respondent Cost Burden: $288,749,300 per year.

The Office is soliciting comments to: (1) Evaluate whether the proposed information requirement is necessary for the proper performance of the functions of the Office, including whether the information will have practical utility; (2) evaluate the accuracy of the Office's estimate of the burden; (3) enhance the quality, utility, and clarity of the information to be collected; and (4) minimize the burden of collecting the information on those who are to respond, including by using appropriate automated, electronic, mechanical, or other technological collection techniques or other forms of information technology.

Please send comments on or before September 24, 2012 to Mail Stop Comments—Patents, Commissioner for Patents, P.O. Box 1450, Alexandria, VA, 22313–1450, marked to the attention of Raul Tamayo, Legal Advisor, Office of Patent Legal Administration, Office of the Deputy Commissioner for Patent Examination Policy. Comments should also be submitted to the Office of Information and Regulatory Affairs, Office of Management and Budget, New Executive Office Building, Room 10202, 725 17th Street NW., Washington, DC 20503, Attention: Desk Officer for the Patent and Trademark Office.

Notwithstanding any other provision of law, no person is required to respond to, nor shall a person be subject to a penalty for failure to comply with, a collection of information subject to the requirements of the Paperwork Reduction Act, unless that collection of information displays a currently valid OMB control number.

List of Subjects in 37 CFR Part 1

Administrative practice and procedure, Courts, Freedom of information, Inventions and patents, Reporting and recordkeeping requirements, Small businesses.

For the reasons stated in the preamble, the USPTO proposes to amend 1 CFR part 37 as follows:

PART 1—RULES OF PRACTICE IN PATENT CASES

1. The authority citation for 37 CFR part 1 continues to read as follows:

Authority: 35 U.S.C. 2(b)(2).

2. Section 1.9 is amended by adding paragraphs (d), (e) and (f) to read as follows:

§ 1.9 Definitions.

* * * * *

(d)(1) The term inventor or inventorship as used in this chapter means the individual or, if a joint invention, the individuals collectively who invented or discovered the subject matter of the invention.

(2) The term joint inventor or coinventor as used in this chapter means any one of the individuals who invented or discovered the subject matter of a joint invention.

(e) The term joint research agreement as used in this chapter means a written contract, grant, or cooperative agreement entered into by two or more persons or entities for the performance of experimental, developmental, or research work in the field of the claimed invention.

(f) The term claimed invention as used in this chapter means the subject matter defined by a claim in a patent or an application for a patent.

* * * * *

3. Section 1.53 is amended by revising paragraph (j) to read as follows:

§ 1.53 Application number, filing date, and completion of application.

* * * * *

(j) *Filing date of international application.* The filing date of an international application designating the United States of America is treated as the filing date in the United States of America under PCT Article 11(3).

4. Section 1.55 is amended by revising paragraphs (a), (c), and (d), and by adding paragraphs (e) and (f) to read as follows:

§ 1.55 Claim for foreign priority.

(a) An applicant in a nonprovisional application may claim the benefit of the filing date of one or more prior foreign applications under the conditions specified in 35 U.S.C. 119(a) through (d) and (f), 172, and 365(a) and (b).

(1) The nonprovisional application must be filed not later than twelve months after the date on which the foreign application was filed. This twelve-month period is subject to 35 U.S.C. 21(b) and § 1.7(a).

(2) In an original application filed under 35 U.S.C. 111(a), the claim for priority as well as a certified copy of the foreign application must both be filed within the later of four months from the actual filing date of the application or sixteen months from the filing date of the prior foreign application. The claim for priority must be presented in an application data sheet (§ 1.76(b)(6)). The claim must identify the foreign application for which priority is claimed, as well as any foreign application for the same subject matter having a filing date before that of the application for which priority is claimed, by specifying the application number, country (or intellectual property authority), day, month, and year of its filing. The time periods in this paragraph do not apply in an application under 35 U.S.C. 111(a) if the application is:

(i) A design application; or

(ii) An application filed before November 29, 2000.

(3) In an application that entered the national stage from an international application after compliance with 35 U.S.C. 371, the claim for priority must be made and a certified copy of the foreign application filed within the time

limit set forth in the PCT and the Regulations under the PCT.

(4) If a nonprovisional application filed on or after March 16, 2013, claims the benefit of the filing date of a foreign application filed prior to March 16, 2013, and also contains, or contained at any time, a claim to a claimed invention that has an effective filing date on or after March 16, 2013, the applicant must provide a statement to that effect within the later of four months from the actual filing date of the application, four months from the date of entry into the national stage as set forth in § 1.491 in an international application, sixteen months from the filing date of the prior foreign application, or the date that a first claim to a claimed invention that has an effective filing date on or after March 16, 2013, is presented in the application. In addition, if a nonprovisional application filed on or after March 16, 2013, claims the benefit of the filing date of a foreign application filed prior to March 16, 2013, does not contain a claim to a claimed invention that has an effective filing date on or after March 16, 2013, but discloses subject matter not also disclosed in the foreign application, the applicant must provide a statement to that effect within the later of four months from the actual filing date of the later-filed application, four months from the date of entry into the national stage as set forth in § 1.491 in an international application, or sixteen months from the filing date of the prior foreign application.

* * * * *

(c) Unless such claim is accepted in accordance with the provisions of this paragraph, any claim for priority under 35 U.S.C. 119(a) through (d) or (f), or 365(a) or (b), not presented in an application data sheet (§ 1.76(b)(6)) within the time period provided by paragraph (a)(2) of this section is considered to have been waived. If a claim for priority under 35 U.S.C. 119(a) through (d) or (f), or 365(a) or (b) is presented after the time period provided by paragraph (a)(2) of this section, the claim may be accepted if the claim identifying the prior foreign application by specifying its application number, country (or intellectual property authority), and the day, month, and year of its filing was unintentionally delayed. A petition to accept a delayed claim for priority under 35 U.S.C. 119(a) through (d) or (f), or 365(a) or (b), must be accompanied by:

(1) The claim under 35 U.S.C. 119(a) through (d) or (f), or 365(a) or (b), and this section to the prior foreign application, unless previously submitted;

(2) A certified copy of the foreign application, unless previously submitted;

(3) The surcharge set forth in § 1.17(t); and

(4) A statement that the entire delay between the date the claim was due under paragraph (a) of this section and the date the claim was filed was unintentional. The Director may require additional information where there is a question whether the delay was unintentional.

(d)(1) The requirement in this section for the certified copy of the foreign application will be considered satisfied if:

(i) The applicant files a request, in a separate document, that the Office obtain a copy of the foreign application from a foreign intellectual property office participating with the Office in a bilateral or multilateral priority document exchange agreement (participating foreign intellectual property office (see § 1.14 (h)(1));

(ii) The foreign application is identified in an application data sheet (§ 1.76(a)(6)); and

(iii) The copy of the foreign application is received by the Office within the period set forth in paragraph (a) of this section or by such later time as may be set by the Office.

(2) If the foreign application was filed at a foreign intellectual property office that is not participating with the Office in a priority document exchange agreement, but a copy of the foreign application was filed in an application subsequently filed in a participating foreign intellectual property office, the request under paragraph (d)(1)(i) of this section must identify the participating foreign intellectual property office and the application number of the subsequent application in which a copy of the foreign application was filed.

(e)(1) The claim for priority and the certified copy of the foreign application specified in 35 U.S.C. 119(b) or PCT Rule 17 must, in any event, be filed within the pendency of the application and before the patent is granted. If the claim for priority or the certified copy of the foreign application is filed after the date the issue fee is paid, it must be accompanied by the processing fee set forth in § 1.17(i), but the patent will not include the priority claim unless corrected by a certificate of correction under 35 U.S.C. 255 and § 1.323.

(2) The Office may require that the claim for priority and the certified copy of the foreign application be filed earlier than provided in paragraph (a) or (e)(1) of this section:

(i) When the application is involved in an interference (see § 41.202 of this title) or derivation (see part 42 of this title) proceeding;

(ii) When necessary to overcome the date of a reference relied upon by the examiner; or

(iii) When deemed necessary by the examiner.

(3) An English language translation of a non-English language foreign application is not required except:

(i) When the application is involved in an interference (see § 41.202 of this title) or derivation (see part 42 of this title) proceeding;

(ii) When necessary to overcome the date of a reference relied upon by the examiner; or

(iii) When specifically required by the examiner.

(4) If an English language translation of a non-English language foreign application is required, it must be filed together with a statement that the translation of the certified copy is accurate.

(f) The time periods set forth in this section are not extendable.

5. Section 1.71 is amended by revising paragraph (g)(1) to read as follows:

§ 1.71 Detailed description and specification of the invention.

* * * * *

(g)(1) The specification may disclose or be amended to disclose the names of the parties to a joint research agreement (35 U.S.C. 102(c)(3)).

* * * * *

6. Section 1.77 is amended by redesignating paragraphs (b)(6) through (b)(12) as paragraphs (b)(7) through (b)(13) and adding a new paragraph (b)(6) to read as follows:

§ 1.77 Arrangement of application elements.

* * * * *

(b) * * *

(6) Statement regarding prior disclosures by the inventor or a joint inventor.

* * * * *

7. Section 1.78 is revised to read as follows:

§ 1.78 Claiming benefit of earlier filing date and cross-references to other applications.

(a) *Claims under 35 U.S.C. 119(e) for the benefit of a prior-filed provisional application.* A nonprovisional application, other than for a design patent, or an international application designating the United States of America may claim the benefit of one or more prior-filed provisional applications under the conditions set forth in 35 U.S.C. 119(e) and paragraph (a) of this section.

(1) The nonprovisional application or international application designating

the United States of America must be filed not later than twelve months after the date on which the provisional application was filed. This twelve-month period is subject to 35 U.S.C. 21(b) and § 1.7(a).

(2) Each prior-filed provisional application must name as the inventor or a joint inventor an inventor named in the later-filed application. In addition, each prior-filed provisional application must be entitled to a filing date as set forth in § 1.53(c) and the basic filing fee set forth in § 1.16(d) must have been paid for such provisional application within the time period set forth in § 1.53(g).

(3) Any nonprovisional application or international application designating the United States of America that claims the benefit of one or more prior-filed provisional applications must contain, or be amended to contain, a reference to each such prior-filed provisional application, identifying it by the provisional application number (consisting of series code and serial number). If the later-filed application is a nonprovisional application, the reference required by this paragraph must be included in an application data sheet (§ 1.76(b)(5)). If a nonprovisional application filed on or after March 16, 2013, claims the benefit of the filing date of a provisional application filed prior to March 16, 2013, and also contains, or contained at any time, a claim to a claimed invention that has an effective filing date on or after March 16, 2013, the applicant must provide a statement to that effect within the later of four months from the actual filing date of the later-filed application, four months from the date of entry into the national stage as set forth in § 1.491 in an international application, sixteen months from the filing date of the prior-filed provisional application, or the date that a first claim to a claimed invention that has an effective filing date on or after March 16, 2013, is presented in the application. In addition, if a nonprovisional application filed on or after March 16, 2013, claims the benefit of the filing date of a provisional application filed prior to March 16, 2013, does not contain a claim to a claimed invention that has an effective filing date on or after March 16, 2013, but discloses subject matter not also disclosed in the provisional application, the applicant must provide a statement to that effect within the later of four months from the actual filing date of the later-filed application, four months from the date of entry into the national stage as set forth in § 1.491 in an international application, or sixteen months from the filing date of the prior-filed provisional application.

(4) The reference required by paragraph (a)(3) of this section must be submitted during the pendency of the later-filed application. If the later-filed application is an application filed under 35 U.S.C. 111(a), this reference must also be submitted within the later of four months from the actual filing date of the later-filed application or sixteen months from the filing date of the prior-filed provisional application. If the later-filed application is a nonprovisional application entering the national stage from an international application under 35 U.S.C. 371, this reference must also be submitted within the later of four months from the date on which the national stage commenced under 35 U.S.C. 371(b) or (f) in the later-filed international application or sixteen months from the filing date of the prior-filed provisional application. Except as provided in paragraph (b) of this section, failure to timely submit the reference is considered a waiver of any benefit under 35 U.S.C. 119(e) of the prior-filed provisional application. The time periods in this paragraph do not apply if the later-filed application is:

(i) An application filed under 35 U.S.C. 111(a) before November 29, 2000; or

(ii) An international application filed under 35 U.S.C. 363 before November 29, 2000.

(5) If the prior-filed provisional application was filed in a language other than English and both an English-language translation of the prior-filed provisional application and a statement that the translation is accurate were not previously filed in the prior-filed provisional application, applicant will be notified and given a period of time within which to file the translation and the statement in the prior-filed provisional application. If the notice is mailed in a pending nonprovisional application, a timely reply to such a notice must include either a confirmation that the translation and statement were filed in the provisional application or an application data sheet withdrawing the benefit claim to avoid abandonment of the nonprovisional application. The translation and statement may be filed in the provisional application, even if the provisional application has become abandoned.

(b) *Delayed claims under 35 U.S.C. 119(e) for the benefit of a prior-filed provisional application.* If the reference required by 35 U.S.C. 119(e) and paragraph (a)(3) of this section is presented in a nonprovisional application after the time period provided by paragraph (a)(4) of this section, the claim under 35 U.S.C. 119(e) for the benefit of a prior-filed provisional application may be accepted if submitted during the pendency of the later-filed application and if the reference identifying the prior-filed application by provisional application number was unintentionally delayed. A petition to accept an unintentionally delayed claim under 35 U.S.C. 119(e) for the benefit of a prior-filed provisional application must be accompanied by:

(1) The reference required by 35 U.S.C. 119(e) and paragraph (a)(3) of this section to the prior-filed provisional application, unless previously submitted;

(2) The surcharge set forth in § 1.17(t); and

(3) A statement that the entire delay between the date the claim was due under paragraph (a)(4) of this section and the date the claim was filed was unintentional. The Director may require additional information where there is a question whether the delay was unintentional.

(c) *Claims under 35 U.S.C. 120, 121, or 365(c) for the benefit of a prior-filed nonprovisional or international application.* A nonprovisional application (including an international application entering the national stage under 35 U.S.C. 371) may claim the benefit of one or more prior-filed copending nonprovisional applications or international applications designating the United States of America under the conditions set forth in 35 U.S.C. 120 and paragraph (c) of this section.

(1) Each prior-filed application must name as the inventor or a joint inventor an inventor named in the later-filed application. In addition, each prior-filed application must either be:

(i) An international application entitled to a filing date in accordance with PCT Article 11 and designating the United States of America; or

(ii) A nonprovisional application under 35 U.S.C. 111(a) that is entitled to a filing date as set forth in § 1.53(b) or § 1.53(d) for which the basic filing fee set forth in § 1.16 has been paid within the pendency of the application.

(2) Except for a continued prosecution application filed under § 1.53(d), any nonprovisional application, or international application designating the United States of America, that claims the benefit of one or more prior-filed nonprovisional applications or international applications designating the United States of America must contain or be amended to contain a reference to each such prior-filed application, identifying it by application number (consisting of the series code

and serial number) or international application number and international filing date. If the later-filed application is a nonprovisional application, the reference required by this paragraph must be included in an application data sheet (§ 1.76(b)(5)). The reference must also identify the relationship of the applications, namely, whether the later-filed application is a continuation, divisional, or continuation-in-part of the prior-filed nonprovisional application or international application. If a nonprovisional application filed on or after March 16, 2013, claims the benefit of the filing date of a nonprovisional application filed prior to March 16, 2013, and also contains, or contained at any time, a claim to a claimed invention that has an effective filing date on or after March 16, 2013, the applicant must provide a statement to that effect within the later of four months from the actual filing date of the later-filed application, four months from the date of entry into the national stage as set forth in § 1.491 in an international application, sixteen months from the filing date of the prior-filed nonprovisional application, or the date that a first claim to a claimed invention that has an effective filing date on or after March 16, 2013, is presented in the application. In addition, if a nonprovisional application filed on or after March 16, 2013, claims the benefit of the filing date of a nonprovisional application filed prior to March 16, 2013, does not contain a claim to a claimed invention that has an effective filing date on or after March 16, 2013, but discloses subject matter not also disclosed in the prior-filed nonprovisional application, the applicant must provide a statement to that effect within the later of four months from the actual filing date of the later-filed application, four months from the date of entry into the national stage as set forth in § 1.491 in an international application, or sixteen months from the filing date of the prior-filed nonprovisional application.

(3) The reference required by 35 U.S.C. 120 and paragraph (c)(2) of this section must be submitted during the pendency of the later-filed application. If the later-filed application is an application filed under 35 U.S.C. 111(a), this reference must also be submitted within the later of four months from the actual filing date of the later-filed application or sixteen months from the filing date of the prior-filed application. If the later-filed application is a nonprovisional application entering the national stage from an international application under 35 U.S.C. 371, this reference must also be submitted within the later of four months from the date on which the national stage commenced under 35 U.S.C. 371(b) or (f) in the later-filed international application or sixteen months from the filing date of the prior-filed application. Except as provided in paragraph (d) of this section, failure to timely submit the reference required by 35 U.S.C. 120 and paragraph (c)(2) of this section is considered a waiver of any benefit under 35 U.S.C. 120, 121, or 365(c) to the prior-filed application. The time periods in this paragraph do not apply if the later-filed application is:

(i) An application for a design patent;

(ii) An application filed under 35 U.S.C. 111(a) before November 29, 2000; or

(iii) An international application filed under 35 U.S.C. 363 before November 29, 2000.

(4) The request for a continued prosecution application under § 1.53(d) is the specific reference required by 35 U.S.C. 120 to the prior-filed application. The identification of an application by application number under this section is the identification of every application assigned that application number necessary for a specific reference required by 35 U.S.C. 120 to every such application assigned that application number.

(5) Cross-references to other related applications may be made when appropriate (see § 1.14), but cross-references to applications for which a benefit is not claimed under title 35, United States Code, must not be included in an application data sheet (§ 1.76(b)(5)).

(d) *Delayed claims under 35 U.S.C. 120, 121, or 365(c) for the benefit of a prior-filed nonprovisional application or international application.* If the reference required by 35 U.S.C. 120 and paragraph (c)(2) of this section is presented after the time period provided by paragraph (c)(3) of this section, the claim under 35 U.S.C. 120, 121, or 365(c) for the benefit of a prior-filed copending nonprovisional application or international application designating the United States of America may be accepted if the reference identifying the prior-filed application by application number or international application number and international filing date was unintentionally delayed. A petition to accept an unintentionally delayed claim under 35 U.S.C. 120, 121, or 365(c) for the benefit of a prior-filed application must be accompanied by:

(1) The reference required by 35 U.S.C. 120 and paragraph (c)(2) of this section to the prior-filed application, unless previously submitted;

(2) The surcharge set forth in § 1.17(t); and

(3) A statement that the entire delay between the date the claim was due under paragraph (c)(3) of this section and the date the claim was filed was unintentional. The Director may require additional information where there is a question whether the delay was unintentional.

(e) *Applications containing conflicting claims.* Where two or more applications filed by the same applicant contain conflicting claims, elimination of such claims from all but one application may be required in the absence of good and sufficient reason for their retention during pendency in more than one application.

(f) *Applications or patents under reexamination naming different inventors and containing patentably indistinct claims.* If an application or a patent under reexamination and at least one other application naming different inventors are owned by the same person and contain conflicting claims, and there is no statement of record indicating that the claimed inventions were commonly owned or subject to an obligation of assignment to the same person on the effective filing date of the later claimed invention, the Office may require the assignee to state whether the claimed inventions were commonly owned or subject to an obligation of assignment to the same person on the effective filing date of the later claimed invention. Even if the claimed inventions were commonly owned, or subject to an obligation of assignment to the same person, on the effective filing date of the later claimed invention, the conflicting claims may be rejected under the doctrine of double patenting in view of such commonly owned or assigned applications or patents under reexamination.

(g) *Time periods not extendable.* The time periods set forth in this section are not extendable.

8. Section 1.104 is amended by revising paragraphs (c)(4) and (c)(5) and adding a new paragraph (c)(6) to read as follows:

§ 1.104 Nature of examination.

(c) * * *

(4)(i) Subject matter that qualifies as prior art under 35 U.S.C. 102(a)(2) and a claimed invention will be treated as commonly owned for purposes of 35 U.S.C. 102(b)(2)(C) if the applicant provides a statement that the prior art and the claimed invention, not later than the effective filing date of the claimed invention, were owned by the same person or subject to an obligation of assignment to the same person.

(ii) Subject matter that qualifies as prior art under 35 U.S.C. 102(a)(2) and

a claimed invention will be treated as commonly owned for purposes of 35 U.S.C. 102(b)(2)(C) on the basis of a joint research agreement under 35 U.S.C. 102(c) if:

(A) The applicant provides a statement that the prior art was developed and the claimed invention was made by or on behalf of one or more parties to a joint research agreement, within the meaning of 35 U.S.C. 100(h) and § 1.9(e), that was in effect on or before the effective filing date of the claimed invention, and the claimed invention was made as a result of activities undertaken within the scope of the joint research agreement; and

(B) The application for patent for the claimed invention discloses or is amended to disclose the names of the parties to the joint research agreement.

(5)(i) Subject matter which qualifies as prior art under 35 U.S.C. 102(e), (f), or (g) in effect prior to March 16, 2013, and a claimed invention in an application or a patent granted on or after December 10, 2004, will be treated as commonly owned for purposes of 35 U.S.C. 103(c) in effect prior to March 16, 2013, if the applicant provides a statement that the prior art and the claimed invention, at the time the claimed invention was made, were owned by the same person or subject to an obligation of assignment to the same person.

(ii) Subject matter which qualifies as prior art under 35 U.S.C. 102(e), (f), or (g) in effect prior to March 16, 2013, and a claimed invention in an application or a patent granted on or after December 10, 2004, will be treated as commonly owned for purposes of 35 U.S.C. 103(c) in effect prior to March 16, 2013, on the basis of a joint research agreement under 35 U.S.C. 103(c)(2) in effect prior to March 16, 2013 if:

(A) The applicant provides a statement to the effect that the prior art and the claimed invention were made by or on behalf of the parties to a joint research agreement, within the meaning of 35 U.S.C. 100(h) and § 1.9(e), which was in effect on or before the date the claimed invention was made, and that the claimed invention was made as a result of activities undertaken within the scope of the joint research agreement; and

(B) The application for patent for the claimed invention discloses or is amended to disclose the names of the parties to the joint research agreement.

(6) Patents issued prior to December 10, 2004, from applications filed prior to November 29, 1999, are subject to 35 U.S.C. 103(c) in effect on November 28, 1999.

* * * * *

9. Section 1.109 is added to read as follows:

§ 1.109 Effective filing date of a claimed invention.

(a) The effective filing date for a claimed invention in a patent or application for patent, other than in a reissue application or reissued patent, is the earliest of:

(1) The actual filing date of the patent or the application for the patent containing a claim to the invention; or

(2) The filing date of the earliest application for which the patent or application is entitled, as to such invention, to priority to or the benefit of an earlier filing date under 35 U.S.C. 119, 120, 121, or 365.

(b) The effective filing date for a claimed invention in a reissue application or a reissued patent is determined by deeming the claim to the invention to have been contained in the patent for which reissue was sought.

10. Section 1.110 is revised to read as follows:

§ 1.110 Inventorship and ownership of the subject matter of individual claims.

When more than one inventor is named in an application or patent, the Office may require an applicant or patentee to identify the inventor, and ownership on the effective filing date, of each claimed invention in the application or patent, when necessary for purposes of an Office proceeding.

11. Section 1.130 is revised to read as follows:

§ 1.130 Affidavit or declaration of attribution, prior disclosure, or derivation under the Leahy-Smith America Invents Act.

(a) When any claim of an application or a patent under reexamination is rejected, the applicant or patent owner may submit an appropriate affidavit or declaration to establish that:

(1) The disclosure on which the rejection is based was by the inventor or joint inventor, the subject matter disclosed had been publicly disclosed by the inventor or a joint inventor before the disclosure of the subject matter on which the rejection is based, or the subject matter disclosed had been publicly disclosed by the inventor or a joint inventor before the date the subject matter in the patent or application on which the rejection is based was effectively filed; or

(2) The disclosure on which the rejection is based was by a party who obtained the subject matter disclosed directly or indirectly from the inventor or a joint inventor, the subject matter disclosed had been publicly disclosed by a party who obtained the subject matter disclosed directly or indirectly from the inventor or a joint inventor before the disclosure of the subject matter on which the rejection is based, or the subject matter disclosed had been publicly disclosed by a party who obtained the subject matter disclosed directly or indirectly from the inventor or a joint inventor before the date the subject matter in the patent or application on which the rejection is based was effectively filed.

(b) If the disclosure on which the rejection is based is by the inventor or a joint inventor, the affidavit or declaration under paragraph (a)(1) of this section must provide a satisfactory showing that the inventor or a joint inventor is in fact the inventor of the subject matter of the disclosure.

(c) If the disclosure on which the rejection is based is not by the inventor or a joint inventor, the affidavit or declaration under paragraph (a)(1) of this section must identify and provide the date of the earlier disclosure of the subject matter by the inventor or a joint inventor and provide a satisfactory showing that the inventor or a joint inventor is the inventor of the subject matter of the earlier disclosure. If the earlier disclosure was a printed publication, the affidavit or declaration must be accompanied by a copy of the printed publication. If the earlier disclosure was not a printed publication, the affidavit or declaration must describe the disclosure with sufficient detail and particularity to determine that the disclosure is a public disclosure of the subject matter on which the rejection is based.

(d) If the disclosure on which the rejection is based is by a party who obtained the subject matter disclosed directly or indirectly from the inventor or a joint inventor, an affidavit or declaration under paragraph (a)(2) of this section must provide a satisfactory showing that the inventor or a joint inventor is the inventor of the subject matter of the disclosure and directly or indirectly communicated the subject matter of the disclosure to the party.

(e) If the disclosure on which the rejection is based is not by a party who obtained the subject matter disclosed directly or indirectly from the inventor or a joint inventor, an affidavit or declaration under paragraph (a)(2) of this section must identify and provide the date of the earlier disclosure of the subject matter by the party who obtained the subject matter disclosed directly or indirectly from the inventor or a joint inventor and also provide a satisfactory showing that the inventor or a joint inventor is the inventor of the subject matter of the earlier disclosure and directly or indirectly communicated

the subject matter of the disclosure to the party. If the earlier disclosure was a printed publication, the affidavit or declaration must be accompanied by a copy of the printed publication. If the earlier disclosure was not a printed publication, the affidavit or declaration must describe the disclosure with sufficient detail and particularity to determine that the disclosure is a public disclosure of the subject matter on which the rejection is based.

(f) The provisions of this section are not available if the rejection is based upon a disclosure made more than one year before the effective filing date of the claimed invention. The Office may require the applicant to file a petition for a derivation proceeding pursuant to § 42.401 *et seq.* of this title if the rejection is based upon a U.S. patent or U.S. patent application publication of a patented or pending application naming another inventor and the patent or pending application claims an invention that is the same or substantially the same as the applicant's claimed invention.

(g) The provisions of this section apply to applications for patent, and to any patent issuing thereon, that contain, or contained at any time:

(1) A claim to a claimed invention that has an effective filing date as defined in 35 U.S.C. 100(i) that is on or after March 16, 2013; or

(2) A specific reference under 35 U.S.C. 120, 121, or 365(c) to any patent or application that contains, or contained at any time, a claim to a claimed invention that has an effective filing date as defined in 35 U.S.C. 100(i) that is on or after March 16, 2013.

12. Section 1.131 is revised to read as follows:

§ 1.131 Affidavit or declaration of prior invention or to disqualify commonly owned patent or published application as prior art.

(a) When any claim of an application or a patent under reexamination is rejected, the inventor of the subject matter of the rejected claim, the owner of the patent under reexamination, or the party qualified under §§ 1.42 or 1.47, may submit an appropriate oath or declaration to establish invention of the subject matter of the rejected claim prior to the effective date of the reference or activity on which the rejection is based. The effective date of a U.S. patent, U.S. patent application publication, or international application publication under PCT Article 21(2) is the earlier of its publication date or the date that it is effective as a reference under 35 U.S.C. 102(e) in effect on March 15, 2013. Prior invention may not be established under this section in any country other than the United States, a NAFTA country, or a WTO member country. Prior invention may not be established under this section before December 8, 1993, in a NAFTA country other than the United States, or before January 1, 1996, in a WTO member country other than a NAFTA country. Prior invention may not be established under this section if either:

(1) The rejection is based upon a U.S. patent or U.S. patent application publication of a pending or patented application to another or others which claims the same patentable invention as defined in § 41.203(a) of this title, in which case an applicant may suggest an interference pursuant to § 41.202(a) of this title; or

(2) The rejection is based upon a statutory bar.

(b) The showing of facts for an oath or declaration under paragraph (a) of this section shall be such, in character and weight, as to establish reduction to practice prior to the effective date of the reference, or conception of the invention prior to the effective date of the reference coupled with due diligence from prior to said date to a subsequent reduction to practice or to the filing of the application. Original exhibits of drawings or records, or photocopies thereof, must accompany and form part of the affidavit or declaration or their absence must be satisfactorily explained.

(c) When any claim of an application or a patent under reexamination is rejected under 35 U.S.C. 103 on a U.S. patent or U.S. patent application publication which is not prior art under 35 U.S.C. 102(b) in effect on March 15, 2013, and the inventions defined by the claims in the application or patent under reexamination and by the claims in the patent or published application are not identical but are not patentably distinct, and the inventions are owned by the same party, the applicant or owner of the patent under reexamination may disqualify the patent or patent application publication as prior art. The patent or patent application publication can be disqualified as prior art by submission of:

(1) A terminal disclaimer in accordance with § 1.321(c); and

(2) An oath or declaration stating that the application or patent under reexamination and patent or published application are currently owned by the same party, and that the inventor named in the application or patent under reexamination is the prior inventor under 35 U.S.C. 104 in effect on March 15, 2013.

(d) The provisions of this section apply to applications for patent, and to any patent issuing thereon, that contains, or contained at any time:

(1) A claim to a claimed invention that has an effective filing date as defined in 35 U.S.C. 100(i) that is before March 16, 2013; or

(2) A specific reference under 35 U.S.C. 120, 121, or 365(c) to any patent or application that contains, or contained at any time, a claim to a claimed invention that has an effective filing date as defined in 35 U.S.C. 100(i) that is before March 16, 2013.

(e) In an application for patent to which the provisions of § 1.130 apply, and to any patent issuing thereon, the provisions of this section are applicable only with respect to a rejection under 35 U.S.C. 102(g) in effect on March 15, 2013.

§§ 1.293 through 1.297 [Removed]

13. Sections 1.293 through 1.297 are removed.

14. Section 1.321 is amended by revising the introductory text of paragraph (d) to read as follows:

§ 1.321 Statutory disclaimers, including terminal disclaimers.

* * * * *

(d) A terminal disclaimer, when filed in a patent application or in a reexamination proceeding to obviate double patenting based upon a patent or application that is not commonly owned but resulted from activities undertaken within the scope of a joint research agreement under 35 U.S.C. 102(c), must:

* * * * *

Dated: July 17, 2012.

David J. Kappos,

Under Secretary of Commerce for Intellectual Property and Director of the United States Patent and Trademark Office.

[FR Doc. 2012–18121 Filed 7–25–12; 8:45 am]

BILLING CODE 3510–16–P

DEPARTMENT OF COMMERCE

Patent and Trademark Office

37 CFR Part 1

[Docket No. PTO–P–2012–0024]

Examination Guidelines for Implementing the First-Inventor-to-File Provisions of the Leahy-Smith America Invents Act

AGENCY: United States Patent and Trademark Office, Commerce.

ACTION: Request for comments.

SUMMARY: The United States Patent and Trademark Office (Office) is publishing

proposed examination guidelines concerning the first-inventor-to-file (FITF) provisions of the Leahy-Smith America Invents Act (AIA). The AIA amends the patent laws pertaining to the conditions of patentability to convert the United States patent system from a ''first to invent'' system to a ''first inventor to file'' system, treats United States patents and United States patent application publications as prior art as of their earliest effective United States, foreign, or international filing date, eliminates the requirement that a prior public use or sale activity be ''in this country'' to be a prior art activity, and treats commonly owned or joint research agreement patents and patent application publications as being by the same inventive entity for purposes of novelty, as well as nonobviousness. The changes to the conditions of patentability in the AIA result in greater transparency, objectivity, predictability, and simplicity in patentability determinations. These guidelines will assist Office personnel in, and inform the public of how the Office is, implementing the FITF provisions of the AIA. The Office is concurrently proposing in a separate action (RIN 0651–AC77) published elsewhere in this issue of the **Federal Register** to amend the rules of practice in patent cases to implement the FITF provisions of the AIA.

DATES: Written comments must be received on or before October 5, 2012.

ADDRESSES: Comments should be sent by electronic mail message over the Internet addressed to: *fitf_guidance@uspto.gov.* Comments may also be submitted by mail addressed to: Mail Stop Comments—Patents, Commissioner for Patents, P.O. Box 1450, Alexandria, VA 22313–1450, marked to the attention of Mary C. Till, Senior Legal Advisor, Office of Patent Legal Administration, Office of the Deputy Commissioner for Patent Examination Policy.

Comments may also be sent by electronic mail message over the Internet via the Federal eRulemaking Portal, *http://www.regulations.gov.*

Although comments may be submitted by postal mail, the Office prefers to receive comments by electronic mail message over the Internet in order to facilitate posting on the Office's Internet Web site. Plain text is preferred, but comments may also be submitted in ADOBE® portable document format or MICROSOFT WORD® format. Comments not submitted electronically should be submitted on paper, and will be digitally scanned into ADOBE® portable document format.

The comments will be available for public inspection at the Office of the Commissioner for Patents, currently located at Madison Building East, Tenth Floor, 600 Dulany Street, Alexandria, Virginia. Comments also will be available for viewing via the Office's Internet Web site (*http://www.uspto.gov*). Because comments will be made available for public inspection, information that the submitter does not desire to be made public, such as an address or phone number, should not be included in the comments.

FOR FURTHER INFORMATION CONTACT: Mary C. Till, Senior Legal Advisor (telephone (571) 272–7755; email *mary.till@uspto.gov*) or Kathleen Kahler Fonda, Senior Legal Advisor (telephone (571) 272–7754; email *kathleen.fonda@uspto.gov*), of the Office of the Deputy Commissioner for Patent Examination Policy. Alternatively, mail may be addressed to Ms. Till or Ms. Fonda at Commissioner for Patents, attn: FITF, P.O. Box 1450, Alexandria, VA 22313–1450.

SUPPLEMENTARY INFORMATION: The AIA [1] was enacted into law on September 16, 2011. Section 3 of the AIA amends the patent laws to: (1) Convert the United States patent system from a ''first to invent'' system to a ''first inventor to file'' system; (2) eliminate the requirement that a prior public use or sale activity be ''in this country'' to be a prior art activity; (3) treat U.S. patents and U.S. patent application publications as prior art as of their earliest effective filing date, regardless of whether the earliest effective filing date is based upon an application filed in the U.S. or in another country; and (4) treat commonly owned patents and patent application publications, or those resulting from a joint research agreement, as being by the same inventive entity for purposes of 35 U.S.C. 102 and 103. The changes in section 3 of the AIA take effect on March 16, 2013.

These proposed guidelines do not constitute substantive rulemaking and do not have the force and effect of law. The proposed guidelines set out the Office's interpretation of 35 U.S.C. 102 and 103 as amended by the AIA, and advise the public and the Patent Examining Corps on how the changes to 35 U.S.C. 102 and 103 in the AIA impact the provisions of the *Manual of Patent Examining Procedure* (MPEP) pertaining to 35 U.S.C. 102 and 103. The guidelines have been developed as a matter of internal Office management and are not intended to create any right or benefit, substantive or procedural, enforceable by any party against the Office. Rejections will continue to be based upon the substantive law, and it is these rejections that are appealable. Failure of Office personnel to follow the guidelines is not, in itself, a proper basis for either an appeal or a petition.

[1] Public Law 112–29, 125 Stat. 284 (2011).

Overview of the Changes to 35 U.S.C. 102 and 103 in the AIA

The AIA replaces pre-AIA 35 U.S.C. 102 with provisions that: (1) A person is not entitled to a patent if the claimed invention was patented, described in a printed publication, or in public use, on sale, or otherwise available to the public before the effective filing date of the claimed invention (35 U.S.C. 102(a)(1)); and (2) a person is not entitled to a patent if the claimed invention was described in a patent issued under 35 U.S.C. 151, or in an application for patent published or deemed published under 35 U.S.C. 122(b), in which the patent or application, as the case may be, names another inventor, and was effectively filed before the effective filing date of the claimed invention (35 U.S.C. 102(a)(2)). In 35 U.S.C. 100(j), the AIA defines the term ''claimed invention'' as the subject matter defined by a claim in a patent or an application for a patent. The AIA defines the term ''effective filing date'' for a claimed invention in a patent or application for patent (other than a reissue application or reissued patent) in 35 U.S.C. 100(i)(1) as meaning the earliest of: (1) The actual filing date of the patent or the application for the patent containing a claim to the claimed invention (claimed invention); or (2) the filing date of the earliest provisional, nonprovisional, international (PCT), or foreign patent application to which the patent or application is entitled to benefit or priority as to such claimed invention. Under pre-AIA 35 U.S.C. 102(a) and (b), knowledge or use of the invention (pre-AIA 35 U.S.C. 102(a)), or public use or sale of the invention (pre-AIA 35 U.S.C. 102(b)), was required to be in the United States to qualify as a prior art activity. Under the AIA, a prior public use, sale activity, or other disclosure has no geographic requirement (i.e., need not be in the United States) to qualify as prior art.

The ''first inventor to file'' provisions of the AIA eliminate the provisions in pre-AIA 35 U.S.C. 102(c) (abandonment of the invention), 102(d) (premature foreign patenting), 102(f) (derivation), and 102(g) (prior invention by another). Under AIA 35 U.S.C. 102, abandonment of the invention or premature foreign

patenting is not relevant to patentability. Prior invention by another is not relevant to patentability unless there is a prior disclosure or filing of an application by another. The situation in which an application names a person who is not the actual inventor as the inventor (pre-AIA 35 U.S.C. 102(f)) will be handled in a derivation proceeding under 35 U.S.C. 135, by a correction of inventorship under 37 CFR 1.48 to name the actual inventor, or under 35 U.S.C. 101.[2]

The AIA provides in 35 U.S.C. 102(b)(1) that a disclosure made one year or less before the effective filing date of a claimed invention shall not be prior art under 35 U.S.C. 102(a)(1) with respect to the claimed invention if: (1) The disclosure was made by the inventor or joint inventor or by another who obtained the subject matter disclosed directly or indirectly from the inventor or a joint inventor; or (2) the subject matter disclosed had, before such disclosure, been publicly disclosed by the inventor or a joint inventor or by another who obtained the subject matter disclosed directly or indirectly from the inventor or a joint inventor. Thus, AIA 35 U.S.C. 102(b)(1) provides a one-year grace period after a first disclosure of an invention within which to file a patent application. Specifically, AIA 35 U.S.C. 102(b)(1) permits an applicant to disqualify a disclosure of the invention made not more than one year before the effective filing date of the claimed invention that would otherwise be prior art if: (1) The disclosure to be disqualified was by an inventor or by a party who obtained the disclosed subject matter from an inventor; or (2) an inventor or a party who obtained the disclosed subject matter from an inventor had publicly disclosed the subject matter before the date of the reference disclosure to be disqualified. The one-year grace period in AIA 35 U.S.C. 102(b)(1) is measured from the earliest U.S. or foreign patent application to which the patent or application is entitled to benefit or priority as to such invention, whereas the one-year grace period in pre-AIA 35 U.S.C. 102(b) is measured from only the earliest application filed in the United States.

AIA 35 U.S.C. 100(f) defines the term ''inventor'' as the individual or if a joint invention, the individuals collectively who invented or discovered the subject matter of the invention. AIA 35 U.S.C. 100(g) AIA defines the term ''joint inventor'' and ''co-inventor'' to mean any one of the individuals who invented or discovered the subject matter of a joint invention.

The date of invention is not relevant under AIA 35 U.S.C. 102. Thus, a prior art disclosure could not be disqualified or antedated by showing that the inventor invented the claimed invention prior to the effective date of the prior art disclosure of the subject matter (e.g., under the provisions of 37 CFR 1.131).

In accordance with 35 U.S.C. 102(a)(2) of the AIA, a person is not entitled to a patent if the claimed invention was described in a U.S. patent or a U.S. patent application publication that names another inventor and was effectively filed before the effective filing date of the claimed invention. Under 35 U.S.C. 374, a World Intellectual Property Organization (WIPO) publication of a Patent Cooperation Treaty (PCT) international application that designates the United States is deemed a U.S. patent application publication for purposes of AIA 35 U.S.C. 102(a)(2). Thus, under the AIA, WIPO publications of PCT applications that designate the United States are treated in the same way as U.S. patent application publications for prior art purposes, regardless of the international filing date or whether they are published in English. Accordingly, a U.S. patent, a U.S. patent application publication, or a WIPO publication of a PCT application that designates the United States (WIPO published application), that names another inventor and was effectively filed before the effective filing date of the claimed invention, is prior art under 35 U.S.C. 102(a)(2). Compare with treatment under pre-AIA 35 U.S.C. 102(e), where a WIPO publication of a PCT application designating the United States is treated as a U.S. patent application publication under pre-AIA 35 U.S.C. 102(e) only if the PCT application was filed on or after November 29, 2000, and published under PCT Article 21(2) in the English language.[3]

In 35 U.S.C. 102(d), the AIA defines ''effectively filed'' for the purpose of determining whether a U.S. patent, U.S. patent application publication, or WIPO published application is prior art under 35 U.S.C. 102(a)(2) to a claimed invention. A U.S. patent, U.S. patent application publication, or WIPO published application is considered to have been effectively filed for purposes of its prior art effect under 35 U.S.C. 102(a)(2) with respect to any subject matter it describes on the earlier of: (1) The actual filing date of the patent or the application for patent; or (2) if the patent or application for patent is entitled to claim the benefit or priority of the filing date of an earlier U.S. provisional, U.S. nonprovisional, international (PCT), or foreign patent application, the filing date of the earliest such application that describes the subject matter of the claimed invention. Thus, if the subject matter relied upon is described in the earliest claimed benefit or priority application, a U.S. patent, a U.S. patent application publication or WIPO published application is effective as prior art as of its earliest benefit or priority date, rather than only as of its earliest United States benefit date.

The AIA provides in 35 U.S.C. 102(b)(2)(A) and (B) that a disclosure shall not be prior art to a claimed invention under 35 U.S.C. 102(a)(2) if: (1) The subject matter disclosed was obtained directly or indirectly from the inventor or a joint inventor; or (2) the subject matter disclosed had, before such subject matter was effectively filed under 35 U.S.C. 102(a)(2), been publicly disclosed by the inventor or a joint inventor or another who obtained the subject matter disclosed directly or indirectly from the inventor or a joint inventor. Thus, under the AIA, a U.S. patent, U.S. patent application publication, or WIPO published application that was not issued or published more than one year before the effective filing date of the claimed invention is not prior art to the claimed invention if: (1) The U.S. patent, U.S. patent application publication, or WIPO published application was by a party who obtained the disclosed subject matter from an inventor; or (2) an inventor, or a party who obtained the disclosed subject matter from an inventor, had disclosed the subject matter before the effective filing date of the U.S. patent, U.S. patent application

[2] 35 U.S.C. 101 (''[w]hoever invents or discovers * * *, may obtain a patent therefor, subject to the conditions and requirements of this title); *see also* P.J. Federico, *Commentary on the New Patent Act,* 75 J. Pat. & Trademark Off. Soc'y 161, 179 (1993) (noting that pre-AIA 35 U.S.C. 102(f) is perhaps unnecessary since 35 U.S.C. 101 provides that (''[w]hoever invents or discovers * * *, may obtain a patent therefor, subject to the conditions and requirements of this title'').

[3] Under 35 U.S.C. 102(e) as amended by the American Inventors Protection Act (Pub. L. 106–113) and the Intellectual Property and High Technology Technical Amendments Act of 2002 (Pub. L. 107–273), the international filing date of a PCT application is a U.S. filing date for prior art purposes under 35 U.S.C. 102(e) if the international application: (1) Has an international filing date on or after November 29, 2000; (2) designated the United States; and (3) is published under PCT Article 21(2) in English. *See* MPEP § 706.02(f)(1). The AIA amends 35 U.S.C. 102, 363, and 374 to provide simply that the publication under the PCT of an international application designating the United States shall be deemed a publication under 35 U.S.C. 122(b).

publication, or WIPO published application.

The AIA provides in 35 U.S.C. 102(b)(2)(C) that a disclosure made in a U.S. patent, U.S. patent application publication, or WIPO published application shall not be prior art to a claimed invention under 35 U.S.C. 102(a)(2) if, not later than the effective filing date of the claimed invention, the subject matter disclosed and the claimed invention were owned by the same person or subject to an obligation of assignment to the same person. This provision replaces the exception in pre-AIA 35 U.S.C. 103(c) that applied only in the context of 35 U.S.C. 103 to prior art that was commonly owned at the time the claimed invention was made, and which qualifies as prior art only under pre-AIA 35 U.S.C. 102(e), (f), or (g). AIA 35 U.S.C. 102(b)(2)(C) provides an exception to prior art that qualifies only under 35 U.S.C. 102(a)(2) but that applies in the context of anticipation or obviousness to prior art that was commonly owned not later than the effective filing date of the claimed invention.

Thus, the AIA provides that certain prior patents and patent applications of co-workers and collaborators are not prior art either for purposes of determining novelty (35 U.S.C. 102) or nonobviousness (35 U.S.C. 103). This exception, however, applies only to AIA 35 U.S.C. 102(a)(2) type of prior art: Namely, U.S. patents, U.S. patent application publications, or WIPO published applications effectively filed, but not published, before the effective filing date of the claimed invention. This exception does not apply to prior art that is available under 35 U.S.C. 102(a)(1), that is, patents, printed publications, public uses, sale activities, or other publicly available disclosures published or occurring before the effective filing date of the claimed invention. A prior disclosure, as defined in 35 U.S.C. 102(a)(1), by a co-worker or collaborator is prior art under 35 U.S.C. 102(a)(1) unless it falls within an exception under 35 U.S.C. 102(b)(1), regardless of whether the subject matter of the prior disclosure and the claimed invention were commonly owned not later than the effective filing date of the claimed invention.

The AIA provides in 35 U.S.C. 102(c) for common ownership of subject matter under joint research agreements. Under 35 U.S.C. 100(h), the term ''joint research agreement'' is defined as a written contract, grant, or cooperative agreement entered into by two or more persons or entities for the performance of experimental, developmental, or research work in the field of the claimed invention. The AIA 35 U.S.C. 102(c) specifically provides that subject matter disclosed and a claimed invention shall be deemed to have been owned by the same person or subject to an obligation of assignment to the same person in applying the provisions of AIA 35 U.S.C. 102(b)(2)(C) if: (1) The subject matter disclosed was developed and the claimed invention was made by, or on behalf of, one or more parties to a joint research agreement that was in effect on or before the effective filing date of the claimed invention; (2) the claimed invention was made as a result of activities undertaken within the scope of the joint research agreement; and (3) the application for patent for the claimed invention discloses or is amended to disclose the names of the parties to the joint research agreement.

The AIA provides in 35 U.S.C. 103 that a patent for a claimed invention may not be obtained, notwithstanding that the claimed invention is not identically disclosed as set forth in 35 U.S.C. 102, if the differences between the claimed invention and the prior art are such that the claimed invention as a whole would have been obvious before the effective filing date of the claimed invention to a person having ordinary skill in the art to which the claimed invention pertains. 35 U.S.C. 103 also provides that patentability shall not be negated by the manner in which the invention was made. This provision tracks pre-AIA 35 U.S.C. 103(a), except that the temporal focus for the obviousness inquiry is before the effective filing date of the claimed invention, rather than at the time of the invention. The provisions of pre-AIA 35 U.S.C. 103(c) have been replaced with 35 U.S.C. 102(b)(2)(C) and (c), and the provisions of pre-AIA 35 U.S.C. 103(b) pertaining to biotechnological processes have been eliminated.

The AIA 35 U.S.C. 102 and 103 take effect on March 16, 2013. These new provisions apply to any patent application that contains or contained at any time: (1) A claimed invention that has an effective filing date that is on or after March 16, 2013; or (2) a designation as a continuation, divisional, or continuation-in-part of an application that contains or contained at any time a claimed invention that has an effective filing date that is on or after March 16, 2013.[4] The AIA 35 U.S.C. 102 and 103 also apply to any patent resulting from an application to which the AIA 35 U.S.C. 102 and 103 applied.[5]

The AIA provides that the provisions of pre-AIA 35 U.S.C. 102(g)[6] apply to each claim of an application for patent if the patent application: (1) Contains or contained at any time a claimed invention having an effective filing date that occurs before March 16, 2013; or (2) is ever designated as a continuation, divisional, or continuation-in-part of an application that contains or contained at any time a claimed invention that has an effective filing date before March 16, 2013.[7] Pre-AIA 35 U.S.C. 102(g) also applies to any patent resulting from an application to which pre-AIA 35 U.S.C. 102(g) applied.[8]

Thus, if an application (1) contains or contained at any time any claimed invention having an effective filing date that is before March 16, 2013, or ever claimed a right of priority or the benefit of an earlier filing date under 35 U.S.C. 119, 120, 121, or 365 based upon an earlier application ever containing a claimed invention having an effective filing date that is before March 16, 2013, and (2) also contains or contained at any time any claimed invention having an effective filing date that is on or after March 16, 2013, or ever claimed a right of priority or the benefit of an earlier filing date under 35 U.S.C. 119, 120, 121, or 365 based upon an earlier application ever containing a claimed invention having an effective filing date that is on or after March 16, 2013, then AIA 35 U.S.C. 102 and 103 apply to the application, but each claimed invention is also subject to pre-AIA 35 U.S.C. 102(g).

I. Detailed Discussion of AIA 35 U.S.C. 102(a) and (b)

The AIA defines in 35 U.S.C. 102(a) the prior art that will preclude the grant of a patent on a claimed invention unless an exception in 35 U.S.C. 102(b) is applicable. 35 U.S.C. 102(a) specifically provides that ''a person shall be entitled to a patent unless—

(1) The claimed invention was patented, described in a printed publication, or in public use, on sale, or otherwise available to the public before the effective filing date of the claimed invention; or

[4] Public Law 112–29, § 3(n)(1), 125 Stat. at 293.

[5] *Id.*

[6] 35 U.S.C. 102(g) precludes the grant of a patent if: (1) During the course of an interference conducted under 35 U.S.C. 135 or 291, another inventor involved therein establishes, to the extent permitted in 35 U.S.C. 104, that before such person's invention thereof the invention was made by such other inventor and not abandoned, suppressed, or concealed, or (2) before such person's invention thereof, the invention was made in this country by another inventor who had not abandoned, suppressed, or concealed it.

[7] Public Law 112–29, § 3(n)(2), 125 Stat. at 293.

[8] *Id.*

(2) The claimed invention was described in a patent issued under section 151, or in an application for patent published or deemed published under section 122(b), in which the patent or application, as the case may be, names another inventor and was effectively filed before the effective filing date of the claimed invention.'' [9]

As an initial matter, Office personnel should note that the introductory phrase ''[a] person shall be entitled to a patent unless'' remains unchanged from the pre-AIA version of 35 U.S.C. 102. Thus, 35 U.S.C. 102 continues to provide that the Office bears the initial burden of explaining why the applicable statutory or regulatory requirements have not been met if a claim in an application is to be rejected. The AIA also does not change the requirement that in rejecting any claim of an application, the Office must establish a prima facie case of unpatentability.

The categories of prior art documents and events are set forth in the AIA's 35 U.S.C. 102(a)(1) and (a)(2) and serve to qualify prior art activities for purposes of determining whether a claimed invention is novel or non-obvious. The documents upon which a prior art rejection may be based are an issued patent, a published application, and a non-patent printed publication. Evidence that the claimed invention was in public use, on sale, or otherwise available to the public may also be used as the basis for a prior art rejection. Note that a printed publication that does not have a sufficiently early publication date to itself qualify as prior art under 35 U.S.C. 102(a)(1) may still be competent evidence of a previous public use, offer for sale, or other availability of a claimed invention that does have a sufficiently early date to qualify as prior art under 35 U.S.C. 102(a)(1).[10]

The AIA in 35 U.S.C. 102(b) sets out exceptions to 35 U.S.C. 102(a), in that prior art that otherwise would be included in 35 U.S.C. 102(a) shall not be prior art if it falls within an exception in 35 U.S.C. 102(b).

35 U.S.C. 102(b)(1) provides exceptions to the categories of prior art defined in 35 U.S.C. 102(a)(1). 35 U.S.C. 102(b)(1) specifically states that a disclosure made one year or less before the effective filing date of a claimed invention shall not be prior art to the claimed invention under subsection (a)(1) if—

▪ The disclosure was made by the inventor or joint inventor or by another who obtained the subject matter disclosed directly or indirectly from the inventor or a joint inventor; or

▪ The subject matter disclosed had, before such disclosure, been publicly disclosed by the inventor or a joint inventor or another who obtained the subject matter disclosed directly or indirectly from the inventor or a joint inventor.'' [11]

35 U.S.C. 102(b)(2) provides exceptions to the categories of prior art defined in 35 U.S.C. 102(a)(2). 35 U.S.C. 102(b)(2) specifically states that a disclosure shall not be prior art to a claimed invention under subsection (a)(2) if—

▪ The subject matter disclosed was obtained directly or indirectly from the inventor or a joint inventor;

▪ The subject matter disclosed had, before such subject matter was effectively filed under subsection (a)(2), been publicly disclosed by the inventor or a joint inventor or another who obtained the subject matter disclosed directly or indirectly from the inventor or a joint inventor; or

▪ The subject matter disclosed and the claimed invention, not later than the effective filing date of the claimed invention, were owned by the same person or subject to an obligation of assignment to the same person.'' [12]

Although some of the prior art provisions of AIA 35 U.S.C. 102(a) and (b) will seem familiar, especially in comparison to pre-AIA 35 U.S.C. 102(a), (b), and (e), the AIA has introduced a number of important changes with respect to prior art documents and activities (disclosures). First, the availability of a disclosure as prior art is measured from the effective filing date of the claimed invention no matter where that filing occurred. Second, the AIA adopts a global view of prior art disclosures and thus does not require that a public use or sale activity be ''in this country'' to be a prior art activity. Finally, a catch-all ''otherwise available to the public'' category of prior art is added.

DATES: Effective filing date: Pre-AIA 35 U.S.C. 102(a) and (e) reference patent-defeating activities occurring before the applicant invented the claimed invention. AIA 35 U.S.C. 102(a)(1) and (a)(2) make no mention of the date of the invention, but instead concern documents that existed or events that happened ''before the effective filing date of the claimed invention.'' As a result, it is no longer possible to antedate or ''swear behind'' certain prior art disclosures by making a showing under 37 CFR 1.131 that the applicant invented the claimed subject matter prior to the effective date of the prior art disclosure.

The AIA defines the term ''effective filing date'' for a claimed invention in a patent or application for patent (other than a reissue application or reissued patent) as the earlier of: (1) The actual filing date of the patent or the application for the patent containing the claimed invention; or (2) the filing date of the earliest application for which the patent or application is entitled, as to such invention, to a right of priority or the benefit of an earlier filing date under 35 U.S.C. 119, 120, 121, or 365.[13] Thus, the one-year grace period in AIA 35 U.S.C. 102(b)(1) is measured from any earlier foreign patent application to which the patent or application is entitled to benefit or priority as to such invention, whereas the one-year grace period in pre-AIA 35 U.S.C. 102(b) is measured from only the earliest application filed in the United States.

As under pre-AIA law, the effective filing date of a claimed invention is determined on a claim-by-claim basis and not an application-by-application basis. That is, the principle that different claims in the same application may be entitled to different effective filing dates vis-à-vis the prior art remains unchanged by the AIA. *See* MPEP § 706.02(VI) (8th ed. 2001) (Rev. 8, July 2010).

Finally, the AIA provides that the ''effective filing date'' for a claimed invention in a reissue patent or application for a reissue patent shall be determined by deeming the claim to the claimed invention to have been contained in the patent for which reissue was sought.[14]

The meaning of ''disclosure'': The AIA does not define the term ''disclosure.'' In addition, while 35 U.S.C. 102(a) does not use the term ''disclosure,'' 35 U.S.C. 102(b)(1) and (b)(2) each state conditions under which a ''disclosure'' that otherwise falls within 35 U.S.C. 102(a)(1) or 102(a)(2) is not prior art under 35 U.S.C. 102(a)(1) or 102(a)(2).[15] Thus, the Office is treating the term ''disclosure'' as a generic expression intended to encompass the documents and activities

[9] 35 U.S.C. 102(a).

[10] *In re Epstein,* 32 F.3d 1559 (Fed. Cir. 1994).

[11] 35 U.S.C. 102(b)(1).

[12] 35 U.S.C. 102(b)(2).

[13] 35 U.S.C. 100(i)(1).

[14] 35 U.S.C. 100(i)(2).

[15] *See* 35 U.S.C. 102(b)(1) (''[a] disclosure made one year or less before the effective filing date of a claimed invention shall not be prior art to the claimed invention under [35 U.S.C. 102](a)(1)'') and 102(b)(2) (''[a] disclosure shall not be prior art to a claimed invention under [35 U.S.C. 102](a)(2)''); *see also* H.R. Rep. No. 112–98, at 43 (2011) (indicating that the grace period provision of 35 U.S.C. 102(b) would apply to all patent applicant actions during the grace period that would create prior art under 35 U.S.C. 102(a)).

enumerated in 35 U.S.C. 102(a) (i.e., being patented, described in a printed publication, in public use, on sale, or otherwise available to the public, or being described in a U.S. patent, U.S. patent application publication, or WIPO published application).

A. Prior Art Under AIA 35 U.S.C. 102(a)(1)

35 U.S.C. 102(a)(1) sets forth prior documents and activities which may preclude patentability. Such documents and activities include prior patenting of the claimed invention, descriptions of the claimed invention in a printed publication, public use of the claimed invention, placing the claimed invention on sale, and otherwise making the claimed invention available to the public.

Patented: AIA 35 U.S.C. 102(a)(1) indicates that prior patenting of a claimed invention precludes the grant of a patent on the claimed invention. This means that if a claimed invention was patented in this or a foreign country before the effective filing date of the claimed invention, 35 U.S.C. 102(a)(1) precludes the grant of a patent on the claimed invention. The effective date of the patent for purposes of prior art is the grant date of the patent for determining whether the patent qualified as prior art under 35 U.S.C. 102(a)(1). There is an exception to this rule if the patent is secret as of the date the rights are awarded.[16] In such situations, the patent is available as prior art as of the date the patent was made available to the public by being laid open for public inspection or disseminated in printed form.[17] The phrase ''patented'' in AIA 35 U.S.C. 102(a)(1) has the same meaning as ''patented'' in pre-AIA 35 U.S.C. 102(a) and (b). For a discussion of ''patented'' as used in pre-AIA 35 U.S.C. 102(a) and (b), see generally MPEP § 2126.

Although an invention may be described in a patent and not claimed therein, the grant date or publication date of the published application would also be the applicable prior art date for purposes of relying on the subject matter disclosed therein as ''described in a printed publication,'' provided that the patent was made available to the public on its grant date. It is helpful to note that a U.S. patent that issues after the effective filing date of the claimed invention is not available as prior art under 35 U.S.C. 102(a)(1), but could be available as prior art under 35 U.S.C. 102(a)(2).

Described in a printed publication: If a claimed invention is described in a patent, published patent application, or printed publication, such a document may be prior art under 35 U.S.C. 102(a)(1) or (a)(2). Both pre-AIA 35 U.S.C. 102(a) and (b) and AIA 35 U.S.C. 102(a)(1) use the term ''described'' with respect to an invention in a prior art printed publication. Likewise, AIA 35 U.S.C. 102(a)(2) uses that term with respect to U.S. patents, U.S. patent application publications, and WIPO published applications. Thus, the Office does not view the AIA as changing the description requirement for a prior art document to anticipate a claimed invention under 35 U.S.C. 102.

While the conditions for patentability of AIA 35 U.S.C. 112(a) require a written description of the claimed invention that would have enabled a person skilled in the art to make as well as use the invention, the prior art provisions of 35 U.S.C. 102(a)(1) and (a)(2) require only that the claimed invention be ''described.''[18] The two basic requirements that must be met by a prior art disclosure in order to describe a claimed invention under AIA 35 U.S.C. 102 are the same as those under pre-AIA 35 U.S.C. 102. First, ''each and every element of the claimed invention'' must be disclosed either explicitly or inherently, and the elements must be ''arranged or combined in the same way as in the claim.''[19] Second, a person of ordinary skill in the art must have been enabled to make the invention without undue experimentation.[20] Thus, in order for a prior art disclosure to describe a claimed invention under 35 U.S.C. 102(a), it must disclose all elements of the claimed invention arranged as they are in the claim, and also provide sufficient guidance to enable a person skilled in the art to make the claimed invention. There is, however, no requirement that a document meet the ''how to use'' requirement of 35 U.S.C. 112(a) in order to qualify as prior art.[21] Furthermore, compliance with the ''how to make'' requirement is judged from the viewpoint of a person of ordinary skill in the art, and thus does not require that the document explicitly disclose information within the knowledge of such a person.[22]

There is an additional important distinction between the written description that is necessary to support a claim under 35 U.S.C. 112(a) and the description sufficient to anticipate the subject matter of the claim under 35 U.S.C. 102.[23] To provide support for a claim under 35 U.S.C. 112(a), it is necessary that the specification describe and enable the entire scope of the claimed invention. However, in order for a prior art disclosure to describe a claimed invention under 35 U.S.C. 102(a)(1) or (a)(2), a prior art document need only describe and enable one skilled in the art to make a single species or embodiment of the claimed invention.[24] This is consistent with pre-AIA case law.

In public use: The pre-AIA case law indicates that a public use will bar patentability if the public use occurs before the critical date[25] and the invention is ready for patenting.[26] Under the pre-AIA case law, the inquiry was whether the use was: (1) Accessible to the public; and (2) commercially exploited. The phrase ''in public use'' in AIA 35 U.S.C. 102(a)(1) is treated as having the same meaning as ''in public use'' in pre-AIA 35 U.S.C. 102(b). For a discussion of ''in public use'' in pre-AIA 35 U.S.C. 102(b), see generally MPEP § 2133.03(a) *et seq.*

Additionally, under pre-AIA 35 U.S.C. 102(b), that an invention was ''in public use'' precluded a patent only if

[16] *In re Ekenstam,* 256 F.2d 321 (CCPA 1958); *see also* MPEP § 2126.01.

[17] *In re Carlson,* 983 F.2d 1032, 1037 (Fed. Cir. 1992); *see also* MPEP § 2126.

[18] *Novo Nordisk Pharma., Inc.* v. *Bio-Tech. Gen. Corp.,* 424 F.3d 1347, 1355 (Fed. Cir. 2005), discussing pre-AIA 35 U.S.C. 112, first paragraph, and pre-AIA 35 U.S.C. 102.

[19] *In re Gleave,* 560 F.3d 1331, 1334 (Fed. Cir. 2009), citing *Eli Lilly & Co.* v. *Zenith Goldline Pharms., Inc.,* 471 F.3d 1369, 1375 (Fed. Cir. 2006); *Net MoneyIN, Inc.* v. *VeriSign, Inc.,* 545 F.3d 1359, 1370 (Fed. Cir. 2008); *In re Bond,* 910 F.2d 831, 832–33 (Fed. Cir. 1990).

[20] *Gleave,* 560 F.3d at 1334, citing *Impax Labs., Inc.* v. *Aventis Pharms. Inc.,* 545 F.3d 1312, 1314 (Fed. Cir. 2008); *In re LeGrice,* 301 F.2d 929, 940–44 (CCPA 1962).

[21] *Gleave,* 560 F.3d at 1334; *see also In re Schoenwald,* 964 F.2d 1122 (Fed. Cir. 1992) (holding that a claimed compound was anticipated even though the prior art reference did not disclose a use for the compound); *Schering Corp.* v. *Geneva Pharms., Inc.,* 339 F.3d 1373, 1380–81 (Fed. Cir. 2003) (pointing out that actually reducing the invention to practice is not necessary in order for a prior art reference to anticipate); *Impax Labs. Inc.* v. *Aventis Pharm.Inc.,* 468 F.3d 1366, 1383 (Fed. Cir. 2006) (stating that ''proof of efficacy is not required for a prior art reference to be enabling for purposes of anticipation'').

[22] *In re Donohue,* 766 F.2d 531, 533 (Fed. Cir. 1985).

[23] *Rasmussen* v. *SmithKline Beecham Corp.,* 413 F.3d 1318 (Fed. Cir. 2005).

[24] *Vas-Cath Inc.* v. *Mahurkar,* 935 F.2d 1555, 1562 (Fed. Cir. 1991) (''As the court pointed out, 'the description of a single embodiment of broadly claimed subject matter constitutes a description of the invention for anticipation purposes * * *, whereas the same information in a specification might not alone be enough to provide a description of that invention for purposes of adequate disclosure.' '') (quoting *In re Lukach,* 442 F.2d 967 (CCPA 1971)); *see also In re Van Langenhoven,* 458 F.2d 132 (CCPA 1972), and *In re Ruscetta,* 255 F.2d 68 (CCPA 1958).

[25] Under pre-AIA 35 U.S.C. 102(b), the critical date is the date that is one year prior to the date of application for patent in the United States.

[26] *Invitrogen Corp.* v. *Biocrest Mfg. L.P.,* 424 F.3d 1374 (Fed. Cir. 2005).

such public use occurred ''in this country.'' [27] Under AIA 35 U.S.C. 102(a)(1), there is no geographic limitation on the location where a prior public use or public availability may occur. Furthermore, a public use would need to occur before the effective filing date of the claimed invention to constitute prior art under AIA 35 U.S.C. 102(a)(1). When formulating a rejection, Office personnel should consider evidence of public use or other public availability regardless of where the public use or other public availability took place.

On sale: The pre-AIA case law regarding on sale activity indicates that a sale will bar patentability of the invention if the sale of the claimed invention was: (1) The subject of a commercial offer for sale, not primarily for experimental purposes; and (2) ready for patenting.[28] With respect to a sale, contract law principles apply in order to determine whether a commercial offer for sale occurred. The phrase ''on sale'' in AIA 35 U.S.C. 102(a)(1) is treated as having the same meaning as ''on sale'' in pre-AIA 35 U.S.C. 102(b), except as discussed in this guidance. For a discussion of ''on sale'' as used in pre-AIA 35 U.S.C. 102(b), see generally MPEP § 2133.03(b) *et seq.*

Under pre-AIA 35 U.S.C. 102(b), if an invention was ''on sale'' patentability was precluded only if the invention was on sale ''in this country.'' Under AIA 35 U.S.C. 102(a)(1), there is no geographic limitation on the location where the sale may occur. When formulating a rejection, Office personnel should consider evidence of sales activity of the claimed invention, regardless of where the sale took place.

The language of AIA 35 U.S.C. 102(a)(1) does not expressly state whether a sale must be ''sufficiently'' public to preclude the grant of a patent on the claimed invention.[29] The Office is seeking the benefit of public comment on this provision prior to issuing its interpretation of the AIA 35 U.S.C. 102(a)(1) ''on sale'' provision and is not setting out an initial position in this guidance to avoid having an influence on the comments. Specifically, the Office is seeking comment on the extent to which public availability plays a role in ''on sale'' prior art defined in 35 U.S.C. 102(a)(1).

Otherwise available prior art: The AIA in 35 U.S.C. 102(a)(1) provides a ''catch-all'' provision, which defines a new additional category of potential prior art not provided for in pre-AIA 35 U.S.C. 102. Specifically, a claimed invention may not be patented if it was ''otherwise available to the public'' before its effective filing date. This ''catch-all'' provision permits decision makers to focus on whether the disclosure was ''available to the public,'' rather than on the means by which the claimed invention became available to the public or on whether a disclosure constitutes a ''printed publication'' or falls within another category of prior art as defined in 35 U.S.C. 102(a)(1). The availability of the subject matter to the public may arise in situations such as a student thesis in a university library,[30] a poster display or other information disseminated at a scientific meeting,[31] subject matter in a laid-open patent application,[32] a document electronically posted on the Internet,[33] or a commercial transaction that does not constitute a sale under the Uniform Commercial Code.[34] Even if a document or other disclosure is not a printed publication, or a transaction is not a sale, either may be prior art under the ''otherwise available'' provision of 35 U.S.C. 102(a)(1), provided that the claimed invention is made sufficiently available to the public.

No requirement of ''by others'': A key difference between pre-AIA 35 U.S.C. 102(a) and AIA 35 U.S.C. 102(a)(1) is the requirement in pre-AIA 35 U.S.C. 102(a) that the prior art relied on was ''by others.'' Under 35 U.S.C. 102(a)(1), there is no requirement that the prior art relied upon be by others. Thus, any prior art which falls under 35 U.S.C. 102(a)(1) need not be by another to constitute potentially available prior art. However, disclosures of the subject matter made one year or less before the effective filing date of the claimed invention by the inventor or a joint inventor or another who obtained the subject matter directly or indirectly from the inventor or a joint inventor may fall within an exception under 35 U.S.C. 102(b)(1) to 35 U.S.C. 102(a)(1).

Admissions: The Office will continue to treat admissions by the applicant as prior art under the AIA. A statement by an applicant in the specification or made during prosecution identifying the work of another as ''prior art'' is an admission which can be relied upon for both anticipation and obviousness determinations, regardless of whether the admitted prior art would otherwise qualify as prior art under the statutory categories of 35 U.S.C. 102.[35] See generally MPEP § 2129.

1. Prior Art Exception Under 35 U.S.C. 102(b)(1)(A) to 35 U.S.C. 102(a)(1)

The AIA in 35 U.S.C. 102(b)(1)(A) provides exceptions to the prior art provisions of 35 U.S.C. 102(a)(1). These exceptions limit the use of an inventor's own work as prior art, when the inventor has publicly disclosed the work either directly or indirectly. The provisions of 35 U.S.C. 102(b)(1)(A) indicate that a disclosure which would otherwise qualify as prior art under 35 U.S.C. 102(a)(1) is not prior art if the disclosure was made: (1) One year or less before the effective filing date of the claimed invention; and (2) by the inventor or a joint inventor, or by another who obtained the subject matter directly or indirectly from the inventor or joint inventor. These guidelines will first discuss issues pertaining to disclosures within the grace period by the inventor or a joint inventor (''grace period inventor disclosure'') and then subsequently discuss issues pertaining to disclosures within the grace period by another who obtained the subject matter directly or indirectly from the inventor or joint inventor (''grace period non-inventor inventor disclosure'').

Grace period inventor disclosure: 35 U.S.C. 102(b)(1)(A) first provides that a disclosure which would otherwise

[27] Similarly, under pre-AIA 35 U.S.C. 102(a), that an invention was ''known or used by others'' precluded a patent only if such knowledge or use occurred ''in this country.''

[28] *Pfaff* v. *Wells Elecs., Inc.,* 525 U.S. 55, 67 (1998).

[29] AIA 35 U.S.C. 102(a)(1) uses the same term (''on sale'') as pre-AIA 35 U.S.C. 102(b). The pre-AIA 35 U.S.C. 102(b) ''on sale'' provision has been interpreted as including commercial activity even if the activity is secret or private. *See, e.g., Metallizing Engineering Co.* v. *Kenyon Bearing & Auto Parts Co.,* 153 F.2d 516 (2d Cir. 1946). However, 35 U.S.C. 102(a)(1), unlike pre-AIA 35 U.S.C. 102(b), contains the residual clause ''or otherwise available to the public.'' *See* 35 U.S.C. 102(a)(1). The legislative history of the AIA indicates that the inclusion of this clause in AIA 35 U.S.C. 102(a)(1) should be viewed as indicating that AIA 35 U.S.C. 102(a)(1) does not cover non-public uses or non-public offers for sale. *See* 157 Cong. Rec. S.1370 (Mar. 8, 2011) (The Committee's understanding of the effect of adding the words 'or otherwise available to the public' is confirmed by judicial construction of this phraseology. Courts have consistently found that when the words 'or otherwise' or 'or other' when used as a modifier at the end of a string of clauses restricts the meaning of the preceding clauses.).

[30] *E.g, In re Cronyn,* 890 F.2d 1158 (Fed. Cir. 1989); *In re Hall,* 781 F.2d 897 (Fed. Cir. 1986); *In re Bayer,* 568 F.2d 1357 (CCPA 1978).

[31] *E.g., In re Klopfenstein,* 380 F.3d 1345, 1348 (Fed. Cir. 2004), *Massachusetts Institute of Technology* v. *AB Fortia,* 774 F.2d 1104 (Fed. Cir. 1985).

[32] *E.g., In re Wyer,* 655 F.2d 221 (CCPA 1981); *see also Bruckelmyer* v. *Ground Heaters, Inc.,* 445 F.3d 1374 (Fed. Cir. 2006).

[33] *E.g., In re Lister,* 583 F.3d 1307 (Fed. Cir. 2009), and *SRI International, Inc.* v. *Internet Security Systems, Inc.,* 511 F.3d 1186 (Fed. Cir. 2008).

[34] *E.g., Group One, Ltd.* v. *Hallmark Cards, Inc.,* 254 F.3d 1041 (Fed. Cir. 2001).

[35] *Riverwood Int'l Corp.* v. *R.A. Jones & Co.,* 324 F.3d 1346, 1354 (Fed. Cir. 2003); *Constant v. Advanced Micro-Devices Inc.,* 848 F.2d 1560, 1570 (Fed. Cir. 1988).

qualify as prior art under 35 U.S.C. 102(a)(1) is not prior art if: (1) The disclosure is made one year or less before the effective filing date of the claimed invention; and (2) was made by the inventor or a joint inventor. Thus, a disclosure that would otherwise qualify as prior art under 35 U.S.C. 102(a)(1) shall not be prior art if the disclosure is made one year or less before the effective filing date of the claimed invention, and the written record of the patent application shows that the disclosure is by the inventor or a joint inventor. What is necessary to show that the disclosure is by the inventor or a joint inventor requires case-by-case treatment, depending upon whether it is apparent from the disclosure or the patent application specification that the disclosure is by the inventor or a joint inventor.

An examiner would not apply prior art that falls under 35 U.S.C. 102(a)(1) if it is apparent from the disclosure that it is by the inventor or a joint inventor. Specifically, the examiner would not apply a prior art disclosure that falls under 35 U.S.C. 102(a)(1) if the disclosure: (1) Was made one year or less before the effective filing date of the claimed invention; (2) names the inventor or a joint inventor as an author or an inventor; and (3) does not name additional persons as authors on a printed publication or inventors on a patent. This means that in circumstances where an application names additional persons as inventors relative to the persons named as authors in the publication (e.g., the application names as inventors A, B, and C, and the publication names as authors A and B), and the publication is one year or less before the effective filing date, it is apparent that the disclosure is a grace period inventor disclosure, and the publication would not be treated as prior art under 35 U.S.C. 102(a)(1). If, however, the application names fewer inventors than a publication (e.g., the application names as inventors A and B, and the publication names as authors A, B and C), it would not be readily apparent from the publication that it is by the inventor or a joint inventor and the publication would be treated as prior art under 35 U.S.C. 102(a)(1).

In certain circumstances, an examiner would not apply prior art that falls under 35 U.S.C. 102(a)(1) if it is apparent from the patent application specification that the disclosure is by the inventor or a joint inventor. The Office is concurrently proposing in a separate action (RIN 0651–AC77) to revise the rules of practice to provide that applicants can include a statement of any grace period inventor disclosures in the specification (in proposed 37 CFR 1.77(b)). If the specification contains a specific reference to a grace period inventor disclosure, the Office will consider it apparent from the patent application specification that the disclosure is by the inventor or a joint inventor, provided that the disclosure does not name additional authors or inventors and there is no other evidence to the contrary. The applicant may also provide a copy of the disclosure (e.g., copy of a printed publication), and will be required to provide a copy of the disclosure to disqualify an intervening disclosure under the provisions of 35 U.S.C. 102(b)(1)(B) (discussed subsequently).

An applicant is not required to use the format specified in proposed 37 CFR 1.77 or identify any prior disclosures by the inventor or a joint inventor (unless necessary to overcome a rejection), but identifying any prior disclosures by the inventor or a joint inventor may save applicants (and the Office) the costs related to an Office action and reply, and expedite examination of the application. In this situation, the Office would consider such a disclosure made one year or less before the effective filing date of the claimed invention as falling within the 35 U.S.C. 102(b)(1)(A) exception, and the disclosure would not be treated as prior art under 35 U.S.C. 102(a)(1).

The Office is proposing in a separate action (RIN 0651–AC77) elsewhere in this issue of the **Federal Register** to revise the rules of practice to provide for situations in which it is not apparent from the disclosure or the patent application specification that the disclosure is by the inventor or a joint inventor (proposed 37 CFR 1.130). Proposed 37 CFR 1.130 would generally provide a mechanism for filing an affidavit or declaration to establish that a disclosure is not prior art under 35 U.S.C. 102(a) due to an exception in 35 U.S.C. 102(b). Proposed 37 CFR 1.130(a)(1) would provide for the situation in which: (1) The disclosure on which the rejection is based was by the inventor or joint inventor; (2) the subject matter disclosed had been publicly disclosed by the inventor or a joint inventor before the disclosure of the subject matter on which the rejection is based; or (3) the subject matter disclosed had been publicly disclosed by the inventor or a joint inventor before the date the subject matter in the patent or published application on which the rejection is based was effectively filed.

An affidavit or declaration under proposed 37 CFR 1.130(a)(1) could be used to establish that the prior art relied upon in a rejection is an inventor disclosure made during the grace period and subject to the exception of 35 U.S.C. 102(b)(1)(A). Specifically, such an affidavit or declaration could be used to establish that the disclosure upon which the rejection is based: (1) Was made one year or less before the effective filing date of the claimed invention; and (2) had been publicly disclosed by the inventor or joint inventor. The affidavit or declaration must show that the disclosure of the subject matter on which the rejection is based is by the inventor or is by a joint inventor.[36] Where the authorship of the prior art disclosure includes the inventor or a joint inventor named in the application, an ''unequivocal'' statement from the inventor or a joint inventor that he/she (or some specific combination of named inventors) invented the subject matter of the disclosure, accompanied by a reasonable explanation of the presence of additional authors, may be acceptable in the absence of evidence to the contrary.[37] However, a mere statement from the inventor or a joint inventor may not be sufficient where there is evidence to the contrary.[38] This is similar to the current process for disqualifying a publication as not being by ''others'' discussed in MPEP § 2132.01, except that 35 U.S.C. 102(b)(1)(A) requires only that the disclosure be by the inventor or a joint inventor.

Grace period non-inventor disclosure: 35 U.S.C. 102(b)(1)(A) also provides that a disclosure which would otherwise qualify as prior art under 35 U.S.C. 102(a)(1) is not prior art if the disclosure was made: (1) One year or less before the effective filing date of the claimed invention; and (2) by another who obtained the subject matter directly or indirectly from the inventor or a joint inventor. Thus, if the disclosure upon which the rejection is based is by someone who obtained the subject matter from the inventor or a joint inventor, the inventor could provide an affidavit or declaration which may overcome the rejection.

As discussed previously, proposed 37 CFR 1.130 would generally provide a mechanism for filing an affidavit or declaration to establish that a disclosure is not prior art due to an exception in AIA 35 U.S.C. 102(b). Proposed 37 CFR 1.130(a)(2) provides for the situation in which: (1) The disclosure on which the

[36] *In re Katz,* 687 F.2d 450, 455 (CCPA 1982).

[37] *In re DeBaun,* 687 F.2d 459, 463 (CCPA 1982).

[38] *Ex parte Kroger,* 218 USPQ 370 (Bd. App. 1982) (affirming rejection notwithstanding declarations by the alleged actual inventors as to their inventorship in view of a nonapplicant author submitting a letter declaring the nonapplicant author's inventorship).

rejection is based was by a party who obtained the subject matter disclosed directly or indirectly from the inventor or a joint inventor; (2) the subject matter disclosed had been publicly disclosed by a party who obtained the subject matter disclosed directly or indirectly from the inventor or a joint inventor before the disclosure of the subject matter on which the rejection is based; or (3) the subject matter disclosed had been publicly disclosed by a party who obtained the subject matter disclosed directly or indirectly from the inventor or a joint inventor before the date the subject matter in the patent or patent application publication on which the rejection is based was effectively filed.

Proposed 37 CFR 1.130(a)(2) thus provides for an affidavit or declaration to establish that the named inventor or joint inventor is the inventor of the disclosed subject matter, and that the subject matter was communicated by the inventor or a joint inventor to another who disclosed it. Such an affidavit or declaration must show that the inventor or a joint inventor is the inventor of the subject matter of the disclosure (in accordance with proposed 37 CFR 1.130(d)), and indicate the communication of the subject matter by the inventor or a joint inventor to another who disclosed the subject matter. Thus, an applicant may benefit from the earlier disclosure by another during the grace period, if the applicant can establish that the inventor or a joint inventor is the actual inventor of the subject matter of the disclosure and that the subject matter was obtained directly or indirectly from the inventor or a joint inventor. Specifically, the applicant must show that a named inventor actually invented the subject matter of the disclosure.[39] The applicant must also show a communication of the subject matter of the disclosure sufficient to enable one of ordinary skill in the art to make the subject matter of the claimed invention.[40] Any documentation which provides evidence of the communication of the subject matter by the inventor or a joint inventor to the entity that earlier disclosed the subject matter should accompany the affidavit or declaration. This is similar to the current process for disqualifying a publication as being derived from the inventor discussed in MPEP §§ 715.01(c) II and 2137.

2. Prior Art Exception Under 35 U.S.C. 102(b)(1)(B) to 35 U.S.C. 102(a)(1)

The AIA in 35 U.S.C. 102(b)(1)(B) provides additional exceptions to the prior art provisions of 35 U.S.C. 102(a)(1). These exceptions disqualify a disclosure that occurs after a public disclosure by the inventor, joint inventor, or another who obtained the subject matter directly or indirectly from the inventor or joint inventor. The provisions of 35 U.S.C. 102(b)(1)(B) indicate that a disclosure which would otherwise qualify as prior art under 35 U.S.C. 102(a)(1) is not prior art if the disclosure was made: (1) One year or less before the effective filing date of the claimed invention; and (2) after a public disclosure of the subject matter of the disclosure which would otherwise qualify as prior art under 35 U.S.C. 102(a)(1) by the inventor or a joint inventor or another who obtained the subject matter directly or indirectly from the inventor or a joint inventor.

The exception in 35 U.S.C. 102(b)(1)(B) applies if the "'subject matter' disclosed [in the prior art disclosure] had, before such [prior art] disclosure, been publicly disclosed by the inventor or a joint inventor * * *."[41] Thus, the exception in 35 U.S.C. 102(b)(1)(B) requires that the subject matter in the prior disclosure being relied upon under 35 U.S.C. 102(a) be the same "subject matter" as the subject matter publicly disclosed by the inventor before such prior art disclosure for the exception in 35 U.S.C. 102(b)(1)(B) to apply. Even if the only differences between the subject matter in the prior art disclosure that is relied upon under 35 U.S.C. 102(a) and the subject matter publicly disclosed by the inventor before such prior art disclosure are mere insubstantial changes, or only trivial or obvious variations, the exception under 35 U.S.C. 102(b)(1)(B) does not apply.

Grace period intervening disclosure exception: Under this exception, potential prior art under 35 U.S.C. 102(a)(1) is not prior art if the patent, printed publication, public use, sale, or other means of public availability was made: (1) One year or less before the effective filing date of the claimed invention; and (2) after a "grace period inventor disclosure" or a "grace period non-inventor disclosure" as those terms have been discussed previously.

An affidavit or declaration under 37 CFR 1.130(a)(1) could be used to establish that the subject matter disclosed had been publicly disclosed by the inventor or a joint inventor before the disclosure of the subject matter on which the rejection is based. Such an affidavit or declaration under 37 CFR 1.130(a)(1) must establish that the subject matter disclosed in the cited prior art had been publicly disclosed by the inventor or a joint inventor before the disclosure of the subject matter on which the rejection is based. Specifically, the inventor or joint inventor must establish the date and content of their earlier public disclosure. If the earlier disclosure was a printed publication, the affidavit or declaration must be accompanied by a copy of the printed publication. If the earlier disclosure was not a printed publication, the affidavit or declaration must describe the earlier disclosure with sufficient detail and particularity to determine that the earlier disclosure is a public disclosure of the subject matter.

Alternatively, as discussed previously, an affidavit or declaration under 37 CFR 1.130(a)(2) could establish that the subject matter disclosed had been publicly disclosed by a party who obtained the subject matter directly or indirectly from the inventor or a joint inventor before the disclosure of the subject matter on which the rejection is based. Such an affidavit or declaration under 37 CFR 1.130(a)(2) must establish that the subject matter disclosed in the cited prior art had been publicly disclosed by another who obtained the subject matter disclosed directly or indirectly from the inventor or a joint inventor before the disclosure of the subject matter on which the rejection is based. The affidavit or declaration must specifically show that the inventor or a joint inventor is the inventor of the subject matter of the earlier public disclosure and indicate the communication of the subject matter to another who disclosed the subject matter. As discussed previously, this is similar to the current process for disqualifying a publication as being derived from the inventor discussed in MPEP section 2137.

Such an affidavit or declaration under 37 CFR 1.130(a)(2) must also establish the date and content of the earlier public disclosure which was made by another who obtained the subject matter directly or indirectly from the inventor or joint inventor. If the earlier disclosure was a printed publication, the affidavit or declaration must be accompanied by a copy of the printed publication. If the earlier disclosure was not a printed publication, the affidavit or declaration must describe the earlier disclosure with sufficient detail and particularity to determine that the earlier disclosure is a public disclosure of the subject

[39] *In re Facius,* 408 F.2d 1396, 1407 (CCPA 1969).

[40] *Gambro Lundia AB* v. *Baxter Healthcare Corp.,* 110 F.3d 1573, 1577 (Fed. Cir. 1997).

[41] 35 U.S.C. 102(b)(1)(B).

matter. Any documentation which provides evidence of the public availability of a non-printed publication prior art and any documentation which provides evidence of the communication of the subject matter by the inventor or a joint inventor to the entity that disclosed the subject matter should accompany the affidavit or declaration.

B. Prior Art Under AIA 35 U.S.C. 102(a)(2)

AIA 35 U.S.C. 102(a)(2) sets forth three types of patent documents that are available prior art as of the date they were effectively filed with respect to the subject matter relied upon in the document: (1) U.S. patents; (2) U.S. patent application publications; and (3) WIPO published applications. These documents may have different prior art effects under pre-AIA 35 U.S.C. 102(e) and AIA 35 U.S.C. 102(a)(2).

A U.S. patent, U.S. patent application publication, or WIPO published application is prior art under 35 U.S.C. 102(a)(1) if its issue or publication date is before the effective filing date of the claim at issue. If the issue date of the U.S. patent or publication date of the U.S. patent application publication or WIPO published application is not before the effective filing date of the claimed invention, it may still be applicable as prior art under 35 U.S.C. 102(a)(2) if it was ''effectively filed'' before the effective filing date of the claim at issue with respect to the subject matter relied upon to reject the claim. AIA 35 U.S.C. 102(d) sets forth when subject matter described in a U.S. patent, U.S. patent application publication, or WIPO published application was ''effectively filed'' for purposes of 35 U.S.C. 102(a)(2).

1. Determining When Subject Matter Was Effectively Filed Under 35 U.S.C. 102(d)

35 U.S.C. 102(d) provides the criteria to determine the date that a U.S. patent, U.S. patent application publication, or WIPO published application was ''effectively filed'' with respect to the subject matter described in the patent or published application for purposes of constituting prior art under 35 U.S.C. 102(a)(2).

Under 35 U.S.C. 102(d), a U.S. patent, U.S. patent application publication, or WIPO published application is prior art under 35 U.S.C. 102(a)(2) with respect to any subject matter described in the patent or published application as of either its actual filing date (35 U.S.C. 102(d)(1)), or the filing date of a prior application to which there is a priority or benefit claim (35 U.S.C. 102(d)(2)). A U.S. patent, U.S. patent application publication, or WIPO published application ''is entitled to claim'' priority to, or the benefit of, a prior-filed application if it fulfills the ministerial requirements of: (1) Containing a priority or benefit claim to the prior-filed application; (2) being filed within the applicable filing period requirement (copending with or within twelve months of the earlier filing, as applicable); and (3) having a common inventor or being by the same applicant.[42]

The AIA draws a distinction between actually being entitled to priority to, or the benefit of, a prior-filed application in the definition of effective filing date in 35 U.S.C. 100(i)(2), and merely being entitled to claim priority to, or the benefit of, a prior-filed application in the definition of effectively filed in 35 U.S.C. 102(d).[43] As a result of this distinction, the question of whether a patent or published application is actually entitled to priority or benefit with respect to any of its claims is not at issue in determining the date the patent or published application was ''effectively filed'' for prior art purposes.[44] Thus, there is no need to evaluate whether any claim of a U.S. patent, U.S. patent application publication, or WIPO published application is actually entitled to priority or benefit under 35 U.S.C. 119, 120, 121, or 365 when applying such a document as prior art.

35 U.S.C. 102(d) does require that the prior-filed application to which a priority or benefit claim is made describe the subject matter from the U.S. patent, U.S. patent application publication, or WIPO published application relied upon in a rejection for that subject matter. However, 35 U.S.C. 102(d) does not require that this description meets the requirements of 35 U.S.C. 112(a). As discussed previously with respect to 35 U.S.C. 102(a), the Office views the description requirement as being the same as the pre-AIA description requirement for a prior art disclosure of an invention.

Another important consequence of 35 U.S.C. 102(d) is its impact on the vitality of the so-called *Hilmer* doctrine.[45] Under the *Hilmer* doctrine, pre-AIA 35 U.S.C. 102(e) limited the effective filing date for U.S. patents (and published applications) as prior art to their earliest United States filing date. In contrast, AIA 35 U.S.C. 102(d) provides that if the U.S. patent, U.S. patent application publication, or WIPO published application claims priority to prior-filed foreign or international application under 35 U.S.C. 119 or 365, the patent or published application was effectively filed on the filing date of the earliest such application that describes the subject matter.[46] Therefore, if the subject matter relied upon is described

[42] *See* 157 Cong. Rec. S.1370 (Mar. 8, 2011) (distinguishing between the core requirement that the prior-filed application include an enabling disclosure and the ministerial requirements that the applications be copendent and specifically referenced); *see also* MPEP § 201.08 (permitting a claim to the benefit of a prior-filed application in a continuation-in-part application provided that the continuation-in-part application has a common inventor, has copendency with the prior-filed application, and includes a specific reference to the prior-filed application, regardless of whether the prior-filed application contains support under 35 U.S.C. 112 for any claim in the continuation-in-part application).

[43] The legislative history of the AIA discusses an important distinction between ministerial entitlement to make a priority or benefit claim, and actual legal entitlement to the priority or benefit: In section 100(i), which defines the effective filing date of the patent under review, the patent must be entitled to the priority or benefit itself under the relevant sections. Here again in section 102(d), however, the application need only be entitled to claim the benefit or priority under those sections. This difference in language distinguishes between the core requirement of section 120 et al.—that the application include an enabling disclosure—and the ministerial requirements of that section—that the application be copendent and specifically referenced. In effect, an application that meets the ministerial requirements of copendency and specific reference is entitled to claim the benefit or priority, but only an application that also offers an enabling disclosure is actually entitled to the benefit or priority itself. *See* 157 Cong. Rec. S.1370 (Mar. 8, 2011).

[44] *In re Wertheim,* 646 F.2d 527 (CCPA 1981), which relies upon *Alexander Milburn Co.* v. *Davis-Bournonville,* 270 U.S. 390 (1926), for its conclusion that the patent must actually be entitled to the benefit of the prior-application for any subject matter in the patent to have a prior art date under 35 U.S.C. 102(e) as of the filing date of the prior application. The legislative history of the AIA indicates that: Paragraph (2) [of AIA 102(d)] is intended to overrule what remains of *In re Wertheim,* 646 F.2d 527 (CCPA 1981), which appeared to hold that only an application that could have become a patent on the day that it was filed can constitute prior art against another application or patent. *See* 157 Cong. Rec. S.1369–70 (Mar. 8, 2011). The Office has previously indicated that the reasoning of *In re Wertheim,* 646 F.2d 527 (CCPA 1981), did not survive the amendment to 35 U.S.C. 102(e) in the American Inventors Protection Act. *See, e.g, Ex parte Yamaguchi,* 88 U.S.P.Q.2d 1606 (Bd. Pat. App. & Inter. 2008). In *In re Giacomini,* 612 F.3d 1380 (Fed. Cir. 2010), the U.S. Court of Appeals for the Federal Circuit (Federal Circuit) held that a patent was effective as prior art as of the filing date of a provisional application claimed under 35 U.S.C. 119(e).

[45] In *In re Hilmer,* 359 F.2d 859, 149 USPQ 480 (CCPA 1966), the CCPA held that reliance on the foreign priority date of a reference applied in a rejection under pre-AIA 35 U.S.C. 102(e) was improper.

[46] When examining an application to which the changes in 35 U.S.C. 102 and 103 do not apply, Office personnel will continue to apply the *Hilmer* doctrine, and foreign priority dates may not be used in determining 35 U.S.C.102(e) prior art dates. Note that the international filing date of a PCT application may be the 35 U.S.C.102(e) prior art date under pre-AIA law under certain circumstances. See MPEP § 706.02(f).).

in the application to which there is a priority or benefit claim, a U.S. patent, a U.S. patent application publication, or WIPO published application is effective as prior art as of the filing date of the earliest such application, regardless of where filed, rather than only as of its earliest United States benefit date.

Requirement of ''names another inventor'': To qualify as prior art under 35 U.S.C. 102(a)(2), the prior art U.S. patent, U.S. patent application publication, or WIPO published application must ''name[s] another inventor.'' This means that if there is any difference in inventive entity between the prior art U.S. patent, U.S. patent application publication, or WIPO published application and the application under examination or patent under reexamination, the U.S. patent, U.S. patent application publication, or WIPO published application satisfies the ''names another inventor'' provision of 35 U.S.C. 102(a)(2). Thus, in the case of joint inventors, only one inventor needs to be different for the inventive entities to be different. Even if there are some inventors in common in a U.S. patent, a U.S. patent application publication, or WIPO published application and in a later-filed application under examination or patent under reexamination, the U.S. patent, a U.S. patent application publication, or WIPO published application qualifies as prior art under 35 U.S.C. 102(a)(2) unless an exception in AIA 35 U.S.C. 102(b)(2) is applicable.

2. Prior Art Exception Under 35 U.S.C. 102(b)(2)(A) to 35 U.S.C. 102(a)(2)

Under 35 U.S.C. 102(b)(2)(A), certain disclosures will not be considered prior art under 35 U.S.C. 102(a)(2) if the disclosure of the subject matter on which the rejection is based was made by another who obtained the subject matter directly or indirectly from the inventor or a joint inventor.

Non-Inventor Disclosure Exception: 35 U.S.C. 102(b)(2)(A) provides that a disclosure which would otherwise qualify as prior art under 35 U.S.C. 102(a)(2) is not prior art if the disclosure was made by another who obtained the subject matter directly or indirectly from the inventor or a joint inventor. This means that if the disclosure of the subject matter upon which the rejection is based is by another who obtained the subject matter from the inventor or joint inventor, then the inventor could provide an affidavit or declaration to establish that the inventor or joint inventor is the inventor of the subject matter of the disclosure and that such subject matter was communicated to the other entity. Thus, an applicant may benefit from the earlier disclosure by another during the grace period, if the applicant can establish that the inventor or a joint inventor is the actual inventor of the subject matter of the disclosure and that the subject matter was obtained directly or indirectly from the inventor or a joint inventor.

As discussed previously, proposed 37 CFR 1.130(a)(2) provides for an affidavit or declaration to establish that the named inventor or joint inventor is the inventor of the disclosed subject matter, and that the subject matter was communicated by the inventor or a joint inventor to another who disclosed it. Such an affidavit or declaration must show that the inventor or a joint inventor is the inventor of the subject matter of the disclosure and indicate the communication of the subject matter by the inventor or a joint inventor to another who disclosed the subject matter. Specifically, the inventor must show that a named inventor actually invented the subject matter of the disclosure.[47] The inventor must also show a communication of the subject matter of the disclosure sufficient to enable one of ordinary skill in the art to make the subject matter of the claimed invention.[48] Any documentation which provides evidence of the communication of the subject matter by the inventor or a joint inventor to the entity that earlier disclosed the subject matter should accompany the affidavit or declaration. This is similar to the current process for disqualifying a publication as being derived from the inventor discussed in MPEP § 2137.

In circumstances where the claims of the cited prior art, which names another inventor and is a U.S. patent, or U.S. patent application publication, and the claims of the application under examination are directed to the same or substantially the same invention, the Office may require an applicant to file a petition for derivation proceeding pursuant to 37 CFR 41.401 *et seq.* of this title.

3. Prior Art Exception Under 35 U.S.C. 102(b)(2)(B) to 35 U.S.C. 102(a)(2)

35 U.S.C. 102(b)(2)(B) provides another exception to the prior art provisions of 35 U.S.C. 102(a)(2). Specifically, 35 U.S.C. 102(b)(2)(B) indicates that certain disclosures are not prior art if the disclosure of the subject matter of the claimed invention to be disqualified was made after a disclosure of the subject matter by the inventor or a joint inventor or after a disclosure of the subject matter by another who obtained the subject matter directly or indirectly from the inventor or joint inventor. In other words, an inventor, joint inventor, or someone who obtained the subject matter directly or indirectly from the inventor or joint inventor, disclosed the subject matter before the disclosure of the subject matter on which the rejection is based.

As discussed previously with respect to 35 U.S.C. 102(b)(1)(B), the exception in 35 U.S.C. 102(b)(2)(B) requires that the subject matter in the prior disclosure being relied upon under 35 U.S.C. 102(a) be the same ''subject matter'' as the subject matter publicly disclosed by the inventor before such prior art disclosure for the exception in 35 U.S.C. 102(b)(2)(B) to apply.[49] Even if the only differences between the subject matter in the prior art disclosure that is relied upon under 35 U.S.C. 102(a) and the subject matter publicly disclosed by the inventor before such prior art disclosure are mere insubstantial changes, or only trivial or obvious variations, the exception under 35 U.S.C. 102(b)(2)(B) does not apply.

Intervening disclosure: Under this exception, potential prior art under 35 U.S.C. 102(a)(2) is not prior art if the U.S. patent, U.S. patent application publication, or WIPO published application was effectively filed after the subject matter was first disclosed by the inventor, a joint inventor, or another who obtained it directly or indirectly from the inventor or joint inventor.

As discussed previously, an affidavit or declaration under 37 CFR 1.130(a)(1) could be used to establish that the subject matter disclosed in the cited patent or published application to be disqualified had been publicly disclosed by the inventor or a joint inventor before the date the subject matter in the patent or published application to be disqualified was effectively filed. Specifically, the inventor or joint inventor must establish the date and content of their earlier public disclosure. If the earlier disclosure was a printed publication, the affidavit or declaration must be accompanied by a copy of the printed publication. If the earlier disclosure was not a printed publication, the affidavit or declaration must describe the earlier disclosure with sufficient detail and particularity to determine that the earlier disclosure is a public disclosure of the subject matter.

Alternatively, also as discussed previously, an affidavit or declaration under 37 CFR 1.130(a)(2) could establish that the subject matter

[47] *In re Facius,* 408 F.2d 1396, 1407 (CCPA 1969).

[48] *Gambro Lundia AB* v. *Baxter Healthcare Corp.,* 110 F.3d 1573, 1577 (Fed. Cir. 1997).

[49] 35 U.S.C. 102(b)(2)(B).

disclosed in the cited patent or published application to be disqualified had been publicly disclosed by a party who obtained the subject matter directly or indirectly from the inventor or a joint inventor before the date the subject matter in the patent or published application to be disqualified was effectively filed. Specifically, the inventor or joint inventor must establish the date and content of their earlier public disclosure. The affidavit or declaration must also show that the inventor or a joint inventor is the inventor of the subject matter disclosed in the patent or published application and indicate the communication of the subject matter to another who disclosed the subject matter. As discussed previously, this is similar to the current process for disqualifying a publication as being derived from the inventor discussed in MPEP § 2137.

Such an affidavit or declaration under 37 CFR 1.130(a)(2) must also establish the date and content of the earlier public disclosure which was made by another who obtained the subject matter directly or indirectly from the inventor or a joint inventor. If the earlier disclosure was a printed publication, the affidavit or declaration must be accompanied by a copy of the printed publication. If the earlier disclosure was not a printed publication, the affidavit or declaration must describe the earlier disclosure with sufficient detail and particularity to determine that the earlier disclosure was a public disclosure of the subject matter. Any documentation which provides evidence of the public availability of a non-printed publication prior art and any documentation which provides evidence of the communication of the subject matter by the inventor or a joint inventor to the entity that disclosed the subject matter should accompany the affidavit or declaration.

In circumstances where the claims of the cited patent or published application to be disqualified is a U.S. patent, or a U.S. patent application publication of a pending or patented application that names another inventor, and the claims of the application under examination and the cited patent or published application are directed to the same or substantially the same invention, the Office may require applicant to file a petition for derivation proceeding pursuant to 37 CFR 41.401 *et seq.*

4. Prior Art Exception Under 35 U.S.C. 102(b)(2)(C) to 35 U.S.C. 102(a)(2)

Under 35 U.S.C. 102(b)(2)(C), there is an exception to the prior art defined in 35 U.S.C. 102(a)(2) if the disclosures of the subject matter on which the rejection is based and the claimed invention, not later than the effective filing date of the claimed invention, were owned by the same person or subject to an obligation of assignment to the same person.

In accordance with 35 U.S.C. 102(a)(2), a U.S. patent, U.S. patent application publication, or WIPO published application that describes a claimed invention of an application under examination may be prior art as of its effective filing date. However, 35 U.S.C. 102(b)(2)(C) excludes published applications or patents from 35 U.S.C. 102(a)(2) if the subject matter disclosed in the potential prior art published application or patent, and the claimed invention of the application under examination ''were owned by the same person or subject to an obligation of assignment to the same person.'' In this situation, the U.S. patent, U.S. patent application publication, or WIPO published application is not available as prior art under 35 U.S.C. 102(a)(2), so long as the common ownership or obligation to assign existed not later than the effective filing date of the claimed invention.

AIA 35 U.S.C. 102(b)(2)(C) resembles pre-AIA 35 U.S.C. 103(c) in that both concern common ownership, and both offer an avenue by which an applicant may avoid certain rejections. However, there are significant differences between AIA 35 U.S.C. 102(b)(2)(C) and pre-AIA 35 U.S.C. 103(c).

If the provisions of 35 U.S.C. 102(b)(2)(C) are met, a U.S. patent, U.S. patent application publication, or WIPO published application that might otherwise qualify as prior art under 35 U.S.C. 102(a)(2) is not available as prior art under either 35 U.S.C. 102 or 103. In contrast, pre-AIA 35 U.S.C. 103(c) merely provided that if its conditions were met, prior art qualifying only under pre-AIA 35 U.S.C. 102(e), (f), or (g), would not preclude patentability under 35 U.S.C. 103. Under pre-AIA 35 U.S.C. 103(c), prior art qualifying only under pre-AIA 35 U.S.C. 102(e), (f), or (g) could preclude patentability under 35 U.S.C. 102, even if the conditions of pre-AIA 35 U.S.C. 103(c) were met. The consequence of this distinction is that a published application or an issued patent that falls under the common ownership provisions of AIA 35 U.S.C. 102(b)(2)(C) may not be applied in either an anticipation or an obviousness rejection.

It is important to note the circumstances in which the AIA 35 U.S.C. 102(b)(2)(C) exception does not remove U.S. patents, U.S. patent application publications, or WIPO published applications as a basis for any rejection. Even if the U.S. patent or U.S. published application is not prior art under 35 U.S.C. 102 or 103 as a result of AIA 35 U.S.C. 102(b)(2)(C), a double patenting rejection (either statutory under 35 U.S.C. 101 or non-statutory, sometimes called obviousness-type) may still be made on the basis of the U.S. patent or U.S. patent application publication. Furthermore, the U.S. patent, U.S. patent application publication, or WIPO published application that does not qualify as prior art as a result of AIA 35 U.S.C. 102(b)(2)(C) may be cited, in appropriate situations, to indicate the state of the art when making a lack of enablement rejection under 35 U.S.C. 112(a). A document need not qualify as prior art to be applied in the context of double patenting [50] or enablement.[51] Also, the AIA 35 U.S.C. 102(b)(2)(C) exception does not apply to any disclosure made before the effective filing date of the claimed invention under AIA 35 U.S.C. 102(a)(1). Thus, if the issue date of a U.S. patent or publication date of a U.S. patent application publication or WIPO published application is before the effective filing date of the claimed invention, it may be prior art under AIA 35 U.S.C. 102(a)(1), regardless of common ownership or the existence of an obligation to assign.

The Office is concurrently proposing in a separate action (RIN 0651–AC77) to revise the rules of practice to include provisions that pertain to commonly owned or joint research agreement subject matter (proposed 37 CFR 1.104(c)(4) and (c)(5)). Proposed 37 CFR 1.104(c)(4) would be applicable to applications that are subject to AIA 35 U.S.C. 102 and 103. Proposed 37 CFR 1.104(c)(5) would be applicable to applications that are subject to 35 U.S.C. 102 and 103 as in effect on March 15, 2013 (pre-AIA 35 U.S.C. 102 and 103). Proposed 37 CFR 1.104(c)(4)(i) would pertain to commonly owned subject matter under AIA 35 U.S.C. 102 and 103, and proposed 37 CFR 1.104(c)(5)(i) would pertain to commonly owned subject matter under pre-AIA 35 U.S.C. 102 and 103.

[50] MPEP § 804.03 (prior art disqualified under the CREATE Act may be the basis for a double patenting rejection).

[51] MPEP § 2124 (publications after the critical date may be used to show factual evidence that, *as of an application's filing date,* undue experimentation would have been required to make or use the invention, that a parameter absent from the claims was or was not critical, that a statement in the specification was inaccurate, that the invention was inoperative or lacked utility, that a claim was indefinite, or that characteristics of prior art products were known).

An applicant's clear and conspicuous statement on the record will be sufficient to establish that the AIA 35 U.S.C. 102(b)(2)(C) exception applies. When relying on the provisions of pre-AIA 35 U.S.C. 103(c), the applicant or his attorney or agent of record could provide the statement required to disqualify the cited prior art. Because the practice to rely on the AIA 35 U.S.C. 102(b)(2)(C) provisions is similar to previous provisions under pre-AIA 35 U.S.C. 103(c), the statement from the applicant or his attorney or agent of record would still be sufficient to disqualify such disclosures. The statement must indicate that the claimed invention of the application under examination and the subject matter disclosed in the published application or issued patent (prior art) to be excluded under AIA 35 U.S.C. 102(b)(2)(C) were owned by the same person or subject to an obligation of assignment to the same person not later than the effective filing date of the claimed invention. The applicant may present supporting evidence such as copies of assignment documents, but is not required to do so. Unless an examiner has independent evidence which raises doubt as to the veracity of such a statement, the examiner may not request corroborating evidence. The statement under AIA 35 U.S.C. 102(b)(2)(C) will generally be treated by the examiner analogously to statements made under pre-AIA 35 U.S.C. 103(c). *See* MPEP § 706.02(l)(2)(II).

II. Joint Research Agreements

35 U.S.C. 102(c) provides that subject matter disclosed, which might otherwise qualify as prior art, and a claimed invention are treated as having been owned by the same person or subject to an obligation of assignment to the same person in applying the provisions of 35 U.S.C. 102(b)(2)(C) if three conditions are satisfied. First, the subject matter disclosed must have been developed and the claimed invention must have been made by, or on behalf of, one or more parties to a joint research agreement that was in effect on or before the effective filing date of the claimed invention.[52] The AIA defines the term ''joint research agreement'' as a written contract, grant, or cooperative agreement entered into by two or more persons or entities for the performance of experimental, developmental, or research work in the field of the claimed invention.[53] Second, the claimed invention must have been made as a result of activities undertaken within the scope of the joint research agreement.[54] Third, the application for patent for the claimed invention must disclose, or be amended to disclose, the names of the parties to the joint research agreement.[55] Proposed 37 CFR 1.104(c)(4)(ii) pertains to joint research agreement subject matter under AIA 35 U.S.C. 102 and 103, and proposed 37 CFR 1.104(c)(5)(ii) pertains to joint research agreement subject matter under pre-AIA 35 U.S.C. 102 and 103. If these conditions are met, the joint research agreement prior art is not available as prior art under 35 U.S.C. 102(a)(2).

The provisions of AIA 35 U.S.C. 102(c) generally track those of the Cooperative Research and Technology Enhancement Act of 2004 (CREATE Act).[56] The major differences between AIA 35 U.S.C. 102(c) and the CREATE Act are that the new provision is keyed to the effective filing date of the claimed invention, while the CREATE Act focused on the date that the claimed invention was made, and that the CREATE Act provisions only applied to prior art obviousness rejections.

In order to invoke a joint research agreement to disqualify a disclosure as prior art, the applicant must provide a statement that the disclosure of the subject matter on which the rejection is based and the claimed invention were made by or on behalf of parties to a joint research agreement under AIA 35 U.S.C. 102(c). The statement must also assert that the agreement was in effect on or before the effective filing date of the claimed invention, and that the claimed invention was made as a result of activities undertaken within the scope of the joint research agreement. When relying on the provisions of pre-AIA 35 U.S.C. 103(c), the applicant or his attorney or agent of record could provide the statement required to disqualify the cited prior art. Because the practice to rely on the 102(c) provisions is similar to previous provisions under pre-AIA 35 U.S.C. 103(c), the statement from the applicant or his attorney or agent of record would still be sufficient to disqualify such disclosures. If the names of the parties to the joint research agreement are not already stated in the application, it is necessary to amend the application to include the names of the parties to the joint research agreement in accordance with 37 CFR 1.71(g). As is the case with establishing common ownership, the applicant may, but is not required to, present evidence supporting the existence of the joint research agreement. Furthermore, the Office will not request corroborating evidence in the absence of independent evidence which raises doubt as to the existence of the joint research agreement.

As discussed previously, the AIA 35 U.S.C. 102(b)(2)(C) exception does not apply to any disclosure made before the effective filing date of the claimed invention under AIA 35 U.S.C. 102(a)(1). Thus, if the issue date of a U.S. patent or publication date of a U.S. patent application publication or WIPO published application is before the effective filing date of the claimed invention, it may be prior art under AIA 35 U.S.C. 102(a)(1) regardless of the fact that the subject matter disclosed and the claimed invention resulted from a joint research agreement.

III. Improper Naming of Inventors

Although the AIA eliminated pre-AIA 35 U.S.C. 102(f), the patent laws still require that a patent name the actual inventor or joint inventors of the claimed subject matter. The Office presumes that the named inventor or inventors are the actual inventor or joint inventors.[57] Where an application names an incorrect inventorship, the applicant should correct the situation via a request to correct inventorship under 37 CFR 1.48. In the rare situation in which it is clear that the application does not name the correct inventorship and the applicant has not filed a request to correct inventorship under 37 CFR 1.48, the appropriate course of action is to reject the claims under 35 U.S.C. 101.[58]

IV. 35 U.S.C. 103

AIA 35 U.S.C. 103 continues to set forth the nonobviousness requirement for patentability.[59] There are, however,

[52] 35 U.S.C. 102(c)(1).

[53] 35 U.S.C. 100(h).

[54] 35 U.S.C. 102(c)(2).

[55] 35 U.S.C. 102(c)(3)

[56] Public Law 108–453, 118 Stat. 3596 (2004)), which was an amendment to pre-AIA 35 U.S.C. 103(c). Congress has made it clear that the intent of AIA 35 U.S.C. 102(c) is to continue the promotion of joint research activities that was begun under the CREATE Act, stating in section 3(b) of the AIA that ''The United States Patent and Trademark Office shall administer section 102(c) of title 35, United States Code, in a manner consistent with the legislative history of the CREATE Act that was relevant to its administration by the United States Patent and Trademark Office.'' *See* 125 STAT. at 287.

[57] MPEP § 2137.01.

[58] As discussed in end note 1, 35 U.S.C. 101 provides that: ''[w]hoever invents or discovers * * *, may obtain a patent therefor, subject to the conditions and requirements of this title.''

[59] 35 U.S.C. 103 provides that: A patent for a claimed invention may not be obtained, notwithstanding that the claimed invention is not identically disclosed as set forth in section 102, if the differences between the claimed invention and the prior art are such that the claimed invention as a whole would have been obvious before the effective filing date of the claimed invention to a

Continued

some important changes from pre-AIA 35 U.S.C. 103.

The most significant difference between the AIA 35 U.S.C. 103 and pre-AIA 35 U.S.C. 103(a) is that AIA 35 U.S.C. 103 determines obviousness as of the effective filing date of the claimed invention, rather than as of the time that the invention was made. Under pre-AIA examination practice, the Office uses the effective filing date as a proxy for the invention date, unless there is evidence of record to establish an earlier date of invention. Thus, as a practical matter during examination, this distinction between the AIA 35 U.S.C. 103 and pre-AIA 35 U.S.C. 103 will result in a difference in practice only when the case under examination is subject to pre-AIA 35 U.S.C. 103, and there is evidence in the case concerning a date of invention prior to the effective filing date. Such evidence is ordinarily presented by way of an affidavit or declaration under 37 CFR 1.131.

Next, AIA 35 U.S.C. 103 differs from that of pre-AIA 35 U.S.C. 103 in that the AIA 35 U.S.C. 103 requires consideration of ''the differences between the claimed invention and the prior art,'' while pre-AIA 35 U.S.C. 103 refers to ''the differences between the subject matter sought to be patented and the prior art.'' This difference in terminology does not indicate the need for any difference of approach to the question of obviousness.[60]

Further, the AIA 35 U.S.C. 103 eliminates pre-AIA 35 U.S.C. 103(b), and the AIA does not contain any similar provision. Pre-AIA 35 U.S.C. 103(b) is narrowly drawn, applying only to nonobviousness of biotechnological inventions, and even then, only when specifically invoked by the patent applicant. Pre-AIA 35 U.S.C. 103(b) provides that under certain conditions, ''a biotechnological process using or resulting in a composition of matter that is novel under section 102 and nonobvious under subsection [103(a)] of this section shall be considered nonobvious.'' In view of the case law since 1995,[61] the need to invoke pre-AIA 35 U.S.C. 103(b) has been rare.

Finally, the AIA 35 U.S.C. 103 eliminates pre-AIA 35 U.S.C. 103(c), but corresponding provisions have been introduced in AIA 35 U.S.C. 102(b)(2)(C) and 102(c). Pre-AIA 35 U.S.C. 103(c) applied if subject matter qualified as prior art only under pre-AIA 35 U.S.C. 102(e), (f), or (g), and only in the context of obviousness under pre-AIA 35 U.S.C. 103(a). If subject matter developed by another person was commonly owned with the claimed invention, or if the subject matter was subject to an obligation of assignment to the same person, at the time the claimed invention was made, then pre-AIA 35 U.S.C. 103(a) did not preclude patentability. Furthermore, under the pre-AIA 35 U.S.C. 103(c), if a joint research agreement was in place on or before the date that the claimed invention was made, the claimed invention was made as a result of activities undertaken within the scope of the joint research agreement, and the application for patent was amended to disclose the names of the parties to the joint research agreement, common ownership or an obligation to assign was deemed to exist. As discussed previously, AIA 35 U.S.C. 102(b)(2)(C) and 102(c) expand on this concept. Under the AIA first-inventor-to-file approach, the common ownership, the obligation to assign, or the joint research agreement must exist on or before the effective filing date, rather than on or before the date the invention was made. If the provisions of AIA 35 U.S.C. 102(b)(2)(C) are met, a disclosure is not prior art at all, whereas under pre-AIA 35 U.S.C. 103(c), certain prior art merely was defined as not precluding patentability. Finally, disclosures disqualified as prior art under AIA 35 U.S.C. 102(b)(2)(C) and 102(c) may not be applied in either an anticipation or an obviousness rejection. However, such disclosures could be the basis for statutory double patenting or non-statutory double patenting rejections.

Generally speaking, and with the exceptions noted herein, pre-AIA notions of obviousness will continue to apply under the AIA. It should be noted that AIA 35 U.S.C. 102(a) defines what is prior art both for purposes of novelty under AIA 35 U.S.C. 102 as well as for purposes of obviousness under AIA 35 U.S.C. 103.[62] Thus, if a document qualifies as prior art under AIA 35 U.S.C. 102(a)(1) or (a)(2), and is not subject to an exception under AIA 35 U.S.C. 102(b), it may be applied for what it describes or teaches to those skilled in the art in a rejection under 35 U.S.C. 103.[63] Finally, Office personnel will continue to follow guidance for formulating an appropriate rationale to support any conclusion of obviousness. See MPEP § 2141 *et seq.* and the guidance documents available at *http://www.uspto.gov/patents/law/exam/ksr_training_materials.jsp.*

V. Applicability Date Provisions, Determining Whether an Application Is Subject to Provisions of First Inventor To File Under AIA

Because the changes to 35 U.S.C. 102 and 103 in the AIA apply only to specific applications filed on or after March 16, 2013, determining the effective filing date of a claimed invention for purposes of applying AIA 35 U.S.C. 102 and 103 provisions or pre-AIA 35 U.S.C. 102 and 103 provisions is critical.

A. Applications Filed Before March 16, 2013

The changes to 35 U.S.C. 102 and 103 in the AIA do not apply to any application filed before March 16, 2013. Thus, any application filed before March 16, 2013, is governed by pre-AIA 35 U.S.C. 102 and 103. Note that the filing of a request for continued examination is not the filing of a new application.

B. Applications Filed on or After March 16, 2013

AIA 35 U.S.C. 102 and 103 take effect on March 16, 2013. AIA 35 U.S.C. 102 and 103 apply to any patent application that contains or contained at any time a claimed invention that has an effective filing date that is on or after March 16, 2013. If a patent application contains or contained at any time a claimed

person having ordinary skill in the art to which the claimed invention pertains. Patentability shall not be negated by the manner in which the invention was made.

[60] As pointed out by the Federal Circuit, ''[t]he term 'claims' has been used in patent legislation since the Patent Act of 1836 to define the invention that an applicant believes is patentable.'' *Hoechst-Roussel Pharmaceuticals, Inc.* v. *Lehman,* 109 F.3d 756, 758 (Fed. Cir. 1997) (citing Act of July 4, 1836, ch. 357, § 6, 5 Stat. 117). Furthermore, in *Graham* v. *John Deere,* 383 U.S. 1 (1966), the second of the Supreme Court's factual inquiries (the ''*Graham* factors'') is that the ''differences between the prior art and the claims at issue are to be ascertained.'' *Graham,* 383 U.S. at 17. Thus, in interpreting 35 U.S.C. 103 as enacted in the 1952 Patent Act—language that remained unchanged until enactment of the AIA—the Court equated ''the subject matter sought to be patented'' with the claims.

[61] As stated in MPEP § 706.02(n), in view of the Federal Circuit's decisions in *In re Ochiai,* 71 F.3d 1565 (Fed. Cir. 1995) and *In re Brouwer,* 77 F.3d 422 (Fed. Cir. 1996), the need to invoke pre-AIA 103(b) rarely arose. Those cases continue to retain their vitality under the AIA.

[62] *Hazeltine Research, Inc.* v. *Brenner,* 382 U.S. 252 (1965) (a previously filed patent application to another pending in the Office, but not patented or published, at the time an application is filed constitutes part of the ''prior art'' within the meaning of 35 U.S.C. 103).

[63] This is in accordance with pre-AIA case law indicating that in making determinations under 35 U.S.C. 103, ''it must be known whether a patent or publication is in prior art under 35 U.S.C. 102.'' *Panduit Corp.* v *Dennison Mfg. Co.,* 810 F.2d 1561, 1568 (Fed. Cir 1987). However, while a disclosure must enable those skilled in the art to make the invention in order to anticipate under 35 U.S.C. 102, a non-enabling disclosure is prior art for all it teaches for purposes of determining obviousness under 35 U.S.C. 103. *Symbol Techs. Inc.* v. *Opticon Inc.,* 935 F.2d 1569, 1578 (Fed. Cir. 1991); *Beckman Instruments* v. *LKB Produkter AB,* 892 F.2d 1547, 1551 (Fed. Cir. 1989).

invention having an effective filing date on or after March 16, 2013, 35 U.S.C. 102 and 103, as amended by the AIA, apply to the application. If even a single claim in the application ever has an effective filing date on or after March 16, 2013, AIA 35 U.S.C. 102 and 103 apply in determining the patentability of every claim in the application. This is the situation even if the remaining claimed inventions all have an effective filing date before March 16, 2013, and even if the claimed invention having an effective filing date on or after March 16, 2013, is canceled.

In addition, AIA 35 U.S.C. 102 and 103 apply to any patent application that contains or contained at any time a specific reference under 35 U.S.C. 120, 121, or 365(c) to any patent or application that contains or contained at any time a claimed invention that has an effective filing date that is on or after March 16, 2013. Thus, AIA 35 U.S.C. 102 and 103 apply to any patent application that was ever designated as a continuation, divisional, or continuation-in-part of an application that contains or contained at any time a claimed invention that has an effective filing date that is on or after March 16, 2013. This is the situation even if the application is amended to delete its reference as a continuation, divisional, or continuation-in-part to the prior-filed application, and even if the claimed invention having an effective filing date on or after March 16, 2013, in the prior-filed application, is canceled. An application filed on or after March 16, 2013, is governed by pre-AIA 35 U.S.C. 102 and 103 only if: (1) The application does not contain and never contained any claimed invention having an effective filing date on or after March 16, 2013; and (2) the application does not contain and never contained a specific reference under 35 U.S.C. 120, 121, or 365(c)) to an application that contains or contained at any time a claim that has an effective filing date that is on or after March 16, 2013.

Thus, once a claim that has an effective filing date on or after March 16, 2013, is introduced in an application, or is introduced to an application in its continuity chain, AIA 35 U.S.C. 102 and 103 apply to that application and any subsequent continuation, divisional, or continuation-in-part of that application. Specifically, a patent application may be amended to add a claimed invention having an effective filing date on or after March 16, 2013, or a specific reference under 35 U.S.C. 120, 121 or 365(c) to an application containing a claimed invention having an effective filing date on or after March 16, 2013, that results in the application no longer being subject to pre-AIA 35 U.S.C. 102 and 103 but being subject to AIA 35 U.S.C. 102 and 103. However, no amendment to a claim, or to a specific reference under 35 U.S.C. 120, 121 or 365(c), or both, will result in the application changing from being subject to AIA 35 U.S.C. 102 and 103 to being subject to pre-AIA 35 U.S.C. 102 and 103.

Also, AIA 35 U.S.C. 102 and 103 apply to any patent resulting from an application to which AIA 35 U.S.C. 102 and 103 were applied. Similarly, pre-AIA 35 U.S.C. 102 and 103 apply to any patent resulting from an application to which pre-AIA 35 U.S.C. 102 and 103 were applied.

C. Applications Subject to the AIA But Also Containing a Claim Having an Effective Filing Date Before March 16, 2013

Even if AIA 35 U.S.C. 102 and 103 apply to a patent application, pre-AIA 35 U.S.C. 102(g) also applies to every claim in the application if it: (1) Contains or contained at any time a claimed invention having an effective filing date that occurs before March 16, 2013; or (2) is ever designated as a continuation, divisional, or continuation-in-part of an application that contains or contained at any time a claimed invention that has an effective filing date that occurs before March 16, 2013. Pre-AIA 35 U.S.C. 102(g) also applies to any patent resulting from an application to which pre-AIA 35 U.S.C. 102(g) applied.

Thus, if an application contains, or contained at any time, any claimed invention having an effective filing date that occurs before March 16, 2013, and also contains, or contained at any time, any claimed invention having an effective filing date that is on or after March 16, 2013, AIA 35 U.S.C. 102 and 103 apply to the application, but each claim must also satisfy pre-AIA 35 U.S.C. 102(g) for the applicant to be entitled to a patent.

Thus, when subject matter is claimed in an application having priority to or the benefit of a prior-filed application (e.g., under 35 U.S.C. 120, 121 or 365(c)), care must be taken to accurately determine whether AIA or pre-AIA 35 U.S.C. 102 and 103 applies to the application.

D. Applicant Statement Regarding Applicability of AIA Provisions to Claims in Applications Filed on or After March 16, 2013

The Office is concurrently proposing the following amendments to 37 CFR 1.55 and 1.78 a separate action (RIN 0651–AC77). First, the Office is proposing to require that if a nonprovisional application filed on or after March 16, 2013, claims the benefit of or priority to the filing date of a foreign, U.S. provisional, U.S. nonprovisional, or international application that was filed prior to March 16, 2013, and also contains or contained at any time a claimed invention having an effective filing date on or after March 16, 2013, the applicant must provide a statement to that effect. Second, the Office is proposing to require that if a nonprovisional application filed on or after March 16, 2013, does not contain a claim to a claimed invention having an effective filing date on or after March 16, 2013, but discloses subject matter not also disclosed in the foreign, provisional, or nonprovisional application, the applicant must provide a statement to that effect. This information will assist the Office in determining whether the application is subject to AIA 35 U.S.C. 102 and 103 or pre-AIA 35 U.S.C. 102 and 103.

Dated: July 17, 2012.

David J. Kappos,

Under Secretary of Commerce for Intellectual Property and Director of the United States Patent and Trademark Office.

[FR Doc. 2012–17898 Filed 7–25–12; 8:45 am]

BILLING CODE 3510–16–P

FEDERAL COMMUNICATIONS COMMISSION

47 CFR Part 54

[WC Docket No. 02–60; DA 12–1166]

Wireline Competition Bureau Seeks Further Comment on Issues in the Rural Health Care Reform Proceeding

AGENCY: Federal Communications Commission.

ACTION: Proposed rule; solicitation of comments.

SUMMARY: In this document, the Wireline Competition Bureau (the Bureau) seeks to develop a more robust record in the pending Rural Health Care reform rulemaking proceeding, which will allow the Commission to craft an efficient permanent program that will help health care providers exploit the potential of broadband to make health care better, more widely available, and less expensive for patients in rural areas.

DATES: Comments are due on or before August 23, 2012. Reply comments are due on or before September 7, 2012.

ADDRESSES: Interested parties may file comments on or before August 23, 2012 and reply comments on or before

September 7, 2012. Comments are to reference WC Docket No. 02–60 and DA 12–1166 and may be filed using the Commission's Electronic Comment Filing System (ECFS). *See Electronic Filing of Documents in Rulemaking Proceedings,* 63 FR 24121 (1998).

• *Electronic Filers:* Comments may be filed electronically using the Internet by accessing the ECFS: *http://fjallfoss.fcc.gov/ecfs2/.*

• *Paper Filers:* Parties who choose to file by paper must file an original and one copy of each filing. If more than one docket or rulemaking number appears in the caption of this proceeding, filers must submit two additional copies for each additional docket or rulemaking number.

• All hand-delivered or messenger-delivered paper filings for the Commission's Secretary must be delivered to FCC Headquarters at 445 12th St. SW., Room TW–A325, Washington, DC 20554. The filing hours are 8:00 a.m. to 7:00 p.m. All hand deliveries must be held together with rubber bands or fasteners. Any envelopes and boxes must be disposed of before entering the building.

• Commercial overnight mail (other than U.S. Postal Service Express Mail and Priority Mail) must be sent to 9300 East Hampton Drive, Capitol Heights, MD 20743.

• U.S. Postal Service first-class, Express, and Priority mail must be addressed to 445 12th Street SW., Washington DC 20554.

• *People with Disabilities:* To request materials in accessible formats for people with disabilities (braille, large print, electronic files, audio format), send an email to *fcc504@fcc.gov* or call the Consumer & Governmental Affairs Bureau at 202–418–0530 (voice), 202–418–0432 (tty).

FOR FURTHER INFORMATION CONTACT: Chin Yoo, Telecommunications Access Policy Division, Wireline Competition Bureau at (202) 418–0295 or TTY (202) 418–0484. For detailed instructions for submitting comments and additional information on the rulemaking process, see the **SUPPLEMENTARY INFORMATION** section of this document.

SUPPLEMENTARY INFORMATION: This is a synopsis of the Wireline Competition Bureau's Public Notice in WC Docket No. 02–60; DA 12–1166, released July 19, 2012. The complete text of this document is available for inspection and copying during normal business hours in the FCC Reference Information Center, Portals II, 445 12th Street SW., Room CY–A257, Washington, DC 20554. The document may also be purchased from the Commission's duplicating contractor, Best Copy and Printing, Inc., 445 12th Street SW., Room CY–B402, Washington, DC 20554, telephone (800) 378–3160 or (202) 863–2893, facsimile (202) 863–2898, or via the Internet at *http://www.bcpiweb.com.*

1. In this document, the Wireline Competition Bureau seeks to develop a more robust record in the pending Rural Health Care reform rulemaking proceeding, particularly with regard to the proposed Broadband Services Program. The Commission's Rural Health Care Pilot Program has helped foster the creation and growth of numerous state and regional broadband networks of health care providers (HCPs) throughout the country. These Pilot project networks have enabled health care providers in rural areas to tap into the medical and technical expertise of other health care providers on their networks, using telemedicine and other telehealth applications to improve the quality and lower the cost of health care for their patients in rural areas. As the Commission moves forward with reform of the Rural Health Care (RHC) program, it can benefit greatly from the experience of the Pilot projects and the lessons learned in the Pilot Program. A more focused and comprehensive record will help the Commission craft an efficient permanent program that will help health care providers exploit the potential of broadband to make health care better, more widely available, and less expensive for patients in rural areas.

2. In its March 16, 2010, Joint Statement on Broadband, the Commission said that ''ubiquitous and affordable broadband can unlock vast new opportunities for Americans, in communities large and small, with respect to * * * health care delivery.'' The National Broadband Plan issued that same day recommended, among other things, that the Commission reform its Rural Health Care program in two ways: (1) By replacing the existing Internet Access Fund with a Health Care Broadband Access Fund, and (2) by establishing a Health Care Broadband Infrastructure Fund to subsidize network deployment for HCPs where existing networks are insufficient. Later that year, the Commission issued a Notice of Proposed Rulemaking in this docket proposing, consistent with the National Broadband Plan recommendations, both a Health Infrastructure Program, which would support the construction of new broadband HCP networks in areas of the country where broadband is unavailable or insufficient, and a Health Broadband Services Program, which would support the monthly recurring costs of broadband services for rural HCPs.

3. Since the Commission issued the *NPRM* in 2010, the rural health care Pilot projects have made additional progress toward full implementation of their health care broadband networks. Although the Commission allowed Pilot projects to receive support to construct and own broadband network facilities, many Pilot projects chose to lease broadband services from commercial service providers as a way to implement broadband networks connecting HCPs. Projects chose to lease services instead of building networks because HCPs did not want to own or manage the networks and could more easily obtain needed broadband without owning the facilities or incurring administrative and other costs associated with network ownership. In light of the number of successful projects that elected to lease services instead of constructing networks, this public notice focuses on deepening the record regarding the Commission's proposed Broadband Services Program and the participation by consortia, including Pilot projects, in such a program.

4. In recent months, Commission staff has engaged in outreach calls and meetings with many Pilot projects, as well as with other entities knowledgeable about rural health care, telemedicine, and Health IT. Based on what we have learned from the Pilot projects, and in light of the comments and other information filed in this Docket, we have identified several areas relating to the Broadband Services Program proposed in the *NPRM* that would benefit from further development of the record: (1) Use of consortium applications; (2) inclusion of urban health care providers in funded consortia; (3) services and equipment to be supported; (4) use of competitive bidding processes and multi-year contracts; and (5) broadband needs of rural health care providers. We are especially interested in obtaining input that reflects the experience of participants in the Commission's current Rural Health Care programs, particularly that of the Pilot Program participants. To the extent possible, parties should identify throughout their comments the particular public notice questions to which they are responding, by using the relevant section numbers and letters (for example, ''Section I.a.—Consortium application process'').

I. Consortia

5. Section 254(h)(7)(B)(vii) of the Communications Act specifically authorizes funding for consortia of eligible health care providers.

Commenters suggest that the consortium approach has many benefits, especially for rural HCPs that have limited administrative, financial, and technical resources. Although a health care provider may apply for funding under the existing Rural Health Care telecommunications program or Internet access program (collectively, ''Primary Program'') as a member of a consortium, in practice consortium applicants in the Primary Program must still file a separate form for every HCP site, and thus the consortium process has not been as widely used in that program as it has in the Pilot Program.

6. In the *NPRM,* the Commission recognized that many Pilot projects, which are consortia of HCPs, may wish to transition to the permanent Broadband Services Program, if adopted, and sought comment on that transition. We now seek to further develop the record on issues relating to the use of consortium applications in the proposed Broadband Services Program:

a. *Consortium application process.* We seek comment on specific procedures for the application process for consortia in the proposed Broadband Services Program and ask commenters to focus on how to streamline the application process while protecting against waste, fraud and abuse. What specific information should the Commission require from the consortium leader regarding each consortium member on the application forms? Should letters of authorization (LOAs) from participating members of the consortium be required? If so, should LOAs be submitted at the request-for-funding-commitment stage (with the filing of the Form 466–A), rather than at the request-for-services stage (with the filing of the Form 465), as is now the case under the Pilot Program? Submitting the LOAs later in the process, with the Form 466–A, would appear to be more administratively efficient for the consortium, because the consortium could wait until it had completed competitive bidding and knew the pricing before soliciting the LOAs. Before they know the pricing, health care providers are likely to be less certain about whether they will want to participate. This approach also would be administratively simpler for USAC, as USAC would only have to confirm eligibility for that smaller group of HCPs that already know the pricing and are therefore more sure that they want to participate. We also seek comment on the alternative of requiring HCP LOAs to be submitted at the earlier (Form 465) stage, as in the Pilot Program. Should the Commission require consortium applicants to provide details in the consortium's request for services (the Form 465) regarding the services to be purchased, such as the desired bandwidth, sites to be served, and general type of service, as is currently required in the Pilot Program? Should the Commission require the lead entity and selected vendor to certify that the support provided will be used only for eligible purposes, as it does in the Pilot Program in connection with Form 466–A? Should the Commission require applicants to submit a ''declaration of assistance,'' as is required with the Form 465 in the Pilot Program? We encourage commenters to draw on their experience with the Pilot and Primary programs in supporting any recommendations for streamlined application procedures.

b. *Post-award reporting requirements.* What is the least burdensome way to collect information necessary to evaluate compliance with the statute and other relevant regulations, and to monitor how funding is being used? Should the Commission require consortium applicants to submit Quarterly Reports, as in the Pilot Program? Would the same information that is required for single HCP applicants be required for each HCP in a consortium application, or should the Commission permit consortium applicants to submit a reduced amount of information for each HCP, as it did in the Pilot Program? We encourage commenters to draw on their experience with the Pilot and Primary Program in supporting any recommendations for streamlined reporting procedures.

c. *Site and service substitution.* The Pilot Program permits site and service substitutions within a project in certain specified circumstances, in order to provide some amount of flexibility to project participants. Under the Pilot Program, a site or service substitution may be approved if (i) the substitution is determined to be provided for in the contract, be within the change clause, or constitute a minor modification, (ii) the site is an eligible health care provider or the service is an eligible service under the Pilot Program, (iii) the substitution does not violate any contract provision or state or local procurement laws, and (iv) the requested change is within the scope of the controlling FCC Form 465, including any applicable Request for Proposal. Should the Commission adopt a similar policy for consortia that participate in the Broadband Services Program, if adopted? Would any modifications to that policy be warranted for the Broadband Services Program?

II. Inclusion of Urban Sites in Consortia

7. One of the benefits of facilitating the establishment and operation of health care networks that serve providers in rural America is improved access to specialized care that typically is more available in urban areas. Historically, support under the Primary Program has only been provided to health care providers that meet the rural health care mechanism's definition of ''rural.'' In the Pilot Program, however, the Commission permitted non-rural health care providers to participate as part of consortia that include health care providers serving rural areas.

8. In response to the *NPRM,* a number of commenters and USAC identify many benefits from including public and not-for-profit urban (or ''non-rural'') health care providers in rural broadband health care networks. Urban providers have taken the lead in many of the Pilot projects, and commenters note that many urban HCPs also provide technical, financial, and administrative support that otherwise might be unavailable to rural HCPs. Commenters have also noted that urban locations typically have medical specialists and other resources that rural HCPs need to access, through telemedicine and other telehealth applications. To further develop the record in the rulemaking docket, we now seek more focused comment on issues relating to the participation of urban HCPs in consortia that serve rural health care needs as part of the Broadband Services Program, if adopted.

a. *Proportion of urban or rural sites in consortia.* The *2007 Pilot Program Selection Order* allowed urban HCPs to receive support under the Pilot Program as long as they were part of networks that had more than a *de minimis* number of rural HCPs on the network. If the Commission were to provide support for broadband services to urban HCPs that are members of consortia that serve rural areas, should it adopt specific rules to ensure that the major benefit of the program flows to rural HCPs and/or to rural patients? For example, should the Commission require that more than a *de minimis* number of rural HCPs be included in such consortia, as in the Pilot program, and if so, what specific metrics should be used to determine whether a sufficient number of rural HCPs are participating in the consortia? For instance, should the Commission specify a maximum percentage of urban sites within a consortium? USAC states that urban sites make up approximately 35 percent of all HCP Pilot Program sites that received funding commitments as

of January 2012. Should the Commission adopt this or a different percentage as an upper limit on the proportion of urban HCP sites within the rural health care program overall or within a consortium?

b. *Limiting percentage of funding available to urban sites.* In the alternative, should the Commission specify a maximum amount of funding that can be provided to urban sites within a consortium? USAC estimates that about 35 percent of committed funds have gone to urban HCPs in the Pilot Program (while noting that this figure probably overstates the true urban share). Given that the Commission has sought comment on how to transition Pilot Program participants into a reformed program, would adopting a requirement that urban sites receive no greater than 35 percent of total funds per funding year be a workable and appropriate restriction? How would the existence of such limits on urban site funding or inclusion of urban sites affect the consortium planning process and the development and growth of consortia over time?

c. *Impact on Fund.* To the extent commenters support a particular approach to limiting the participation of urban sites in consortia serving rural areas, they also should estimate the likely impact on the RHC funding mechanism if the Commission were to adopt their recommended approach. Commenters should provide data to support their estimates. We welcome detailed analysis on the impact on the Fund of any limits (or lack thereof) on urban HCP participation that the Commission may adopt or that parties may propose.

d. *Impact on network design.* USAC notes that in the hub-and-spoke configuration common to Pilot projects, where a centralized or primary HCP serves as the main provider and is surrounded by several subsidiary providers, the hub is often an urban HCP. What impact would including (or excluding) urban sites from funding under the Broadband Services Program have on network design and efficiency, from both a cost perspective and a technological perspective? Would it be possible to limit funding for urban sites to recurring and non-recurring charges associated with equipment necessary to create hubs at urban HCP sites? Would such a limitation unnecessarily restrict participation by urban HCPs or otherwise limit the effectiveness of the program?

e. *Role of urban health care providers if not funded.* There may be significant benefits to Pilot projects from having a project leader that handles administrative and other necessary tasks on behalf of the other project participants. If the Commission were to exclude urban sites that are part of consortia serving rural communities from receiving funding under the Broadband Services Program, would there be administrative benefits to allowing such urban providers still to serve as project leaders even though they do not receive any support? In response to the *NPRM,* some commenters and Pilot projects contend that without support from the RHC program, urban sites may be reluctant to participate in broadband networks with rural HCPs, which could undermine the ability of rural HCPs to interconnect with those urban sites and to draw on their technical and medical expertise. What incentives would urban providers have to participate as a project leader if they are unable to receive any support?

f. *Grandfathering of urban sites already participating in Pilot projects.* If the Commission chooses not to provide funding to urban sites under the Broadband Services Program, or sets limits on such funding as discussed in paragraph (b) above, should the Commission nevertheless provide funding to urban sites that have received funding under existing Pilot projects? Should the Commission limit the funding to existing Pilot project urban sites only for so long as the urban site is a member of a consortium with rural HCPs?

III. Eligible Services and Equipment

9. In the Pilot Program, the Commission allows health care providers to use ''any currently available technology'' in order to create networks. The Pilot Program funds both recurring costs and non-recurring costs (NRCs) for dedicated broadband networks connecting HCPs in a state or region, including the cost of subscribing to commercial service providers' services. As noted above, although the Pilot Program permitted projects to construct and own broadband network facilities, many projects elected to lease broadband services (which mostly involve recurring costs) rather than constructing and owning the broadband facilities themselves. As of February 29, 2012, the Pilot Program had committed approximately $35 million for construction, $162 million for leased/tariffed facilities or services, and $19 million for network equipment (including engineering and installation). The projects choosing to lease services cite several reasons for that choice, including that the HCPs' core competencies does not include owning or managing communications networks, that the HCPs can obtain the needed broadband without owning the facilities themselves, and that the administrative and other costs associated with broadband network ownership are too great.

10. For the Broadband Services Program, the *NPRM* proposed to fund ''recurring monthly costs for any advanced telecommunications and information services that provide point-to-point connectivity, including Dedicated Internet Access.'' In light of the Pilot Program experience and the comments in the record, we seek more focused comment on questions related to this proposal.

a. *Point-to-point connectivity.* Some commenters have raised concerns regarding the term ''point-to-point'' in the *NPRM.* We seek to further develop the record on the types of connectivity that should be eligible for support under the proposed Broadband Services Program. Health care networks and other enterprise customers use a wide variety of connectivity solutions which allow a variety of topologies (ring, mesh, hub-and-spoke, line, etc.) and technologies (MetroE, MPLS, Virtual Private Network, etc.) to meet their requirements. These solutions are ''point-to-point'' in the sense that they allow a facility to send or receive data to or from another facility, but they also provide additional capabilities—for example, the ability to connect to multiple facilities on the same network, and/or the ability to connect to another facility without needing a physically ''dedicated'' circuit to that facility. Should the definition of services to be funded under the Broadband Services Program omit the phrase ''point-to-point''? We seek comment on whether the rules for the Broadband Services Program should enumerate a wide range of connectivity solutions such as those listed above, or should be more general, in recognition of the likely change and evolution of services utilized by health care providers that will occur over time. Should there be any distinction in the types of services that would be funded if the applicant is part of a consortium, as opposed to individual applicants?

b. *Eligible non-recurring costs (NRCs).* For the Broadband Services Program, the Commission proposed in the *NPRM* to provide one-time support for 50 percent of reasonable and customary installation charges for broadband access and to provide support for the cost of leases of lit or dark fiber. The American Telemedicine Association has recommended that the Commission, at a minimum, support the costs of routers and bridges associated with the installation of broadband services to an

eligible health care provider, and that the Commission allow such providers to work together to purchase equipment through joint, cooperative bidding procedures in order to allow for more efficient purchasing of network equipment costs. USAC notes that the availability of funding for certain types of equipment in the Pilot Program (''servers, routers, firewalls, and switches'') facilitates the ability of health care providers to upgrade circuits or create private networks. We seek more focused comment on whether the NRCs eligible to receive support under the Broadband Services Program should include equipment to enable the formation of networks among consortium members, similar to the Pilot Program.

c. *Limited Funding for Construction of Facilities in Broadband Services Program.* As noted above, most Pilot projects chose to lease services rather than to construct and own their own network facilities. Some Pilot projects nevertheless argue that they need the option of constructing their own facilities when no service provider is willing to construct broadband facilities and lease them to project participants, or when the bids a project receives for leased services are higher than the cost of construction. The *NPRM* proposed a Health Infrastructure Program that would fund the construction of dedicated broadband networks in areas where broadband is demonstrated to be unavailable, and would require HCPs to have an ownership interest in the network facilities funded by the program. The Broadband Services Program, in contrast, would provide funding only for broadband services and, as proposed, would not cover capital or infrastructure costs. We seek to further develop the record on whether it would be appropriate under the proposed Broadband Services Program, if adopted, to provide funding to recipients to construct and own network facilities under limited circumstances. Would it be appropriate, for instance, in a situation where the applicant could demonstrate that self-provisioning the last mile facility to connect to an existing health care network is more cost-effective than procuring that last mile connectivity from a commercial service provider? What requirements would need to be in place to ensure that construction and ownership is the most cost-effective option? How would a health care provider or consortium make such a showing? Would it be necessary to wait until after the competitive bidding process is completed in order for an applicant to be able to make that showing? Are there other more preliminary milestones during the competitive bidding process after which an applicant could make a showing? If the Commission were to make this option available, should there be specific caps on funding available to construct HCP-owned facilities?

d. *Ineligible sites and treatment of shared services/costs.* Section 254(h)(3) of the Act and § 54.671(a) of the Commission's rules restrict the resale of any services purchased pursuant to the rural health care support mechanism. In the Pilot Program, the Commission determined that, under this resale restriction, a selected participant could not sell network capacity that was supported by Pilot Program funding, but could share excess network capacity with an ineligible entity as long as the ineligible entity paid its ''fair share'' of network costs attributable to the portion of the network capacity used. In the Pilot Program, projects have allocated the cost of shared services and equipment among members (both eligible and ineligible HCPs) by taking into account a variety of healthcare-specific factors. We note that in the Pilot Program, projects submit information about sharing of services and costs among members with their requests for funding commitments, and that USAC reviews and approves those submissions.

We seek comment on whether there is a need to adopt specific rules in the Broadband Services Program (if adopted), regarding the participation of ineligible HCP sites (*e.g.,* for-profit rural health clinics or, if not included in the Broadband Services Program, urban HCPs) in consortia that receive funding for broadband services provided to eligible members. Even if not funded, there may be other health care and financial reasons why providers that are not funded through the program may wish to enter into cooperative arrangements with other providers that are funded, in order to create local and regional health care networks. By acting together, providers are more likely to receive lower pricing and a wider array of services to meet their health care needs. Should the Broadband Services Program have a ''fair share'' requirement comparable to the Pilot Program? In particular, should the Commission adopt a specific approach to shared services and costs for consortium applicants, or should the Commission just require that the allocation of the costs of shared services and equipment among consortia members be reasonable? We welcome further comment on whether the procedures utilized by USAC to implement the fair share requirement in the Pilot Program are workable or burdensome, and what measures would best address potential waste, fraud and abuse in a reformed program.

IV. Competitive Bidding Process and Related Matters

11. The Pilot Program requires projects to prepare Requests for Proposals (RFPs) and to use a competitive bidding process to select broadband infrastructure and service providers. It appears that the competitive bidding process, in combination with bulk purchasing by a large number of health care providers using a single RFP, has led to lower prices, better service quality, and more broadband deployment than the individual HCPs might otherwise have obtained. In the *NPRM,* the Commission proposed to extend the competitive bidding requirements currently applicable to the Primary Program's Internet access program to the Broadband Services Program, and sought comment on changes that could be made to make the competitive bidding mechanism more successful or efficient. We now seek more focused comment on issues relating to the competitive bidding process.

a. *Competitive bidding process.* Building on the experience gained from the Pilot Program, what specific requirements should be in place for competitive bidding in the Broadband Services Program, if adopted? Should the Commission require consortium applicants in the Broadband Services Program to prepare a Request for Proposal (RFP), as applicants in the Pilot Program were required to do? Should the Commission exempt consortia from the RFP requirement if they are applying for less than a specified amount of support (for example, if they are applying for less than $100,000 in support)? Are there other elements of the competitive bidding process utilized in the Pilot Program that should be applied to the Broadband Services Program, either as is or with changes that the parties suggest to improve the process? Are there any competitive bidding requirements used in the Schools and Libraries Universal Service Support Mechanism that the Commission should apply to the Broadband Services Program, if adopted?

b. *Requirement to obtain competitive bids.* Some commenters indicate individual rural HCPs may decide not to seek RHC support due to the added administrative burden associated with the competitive bidding process. The

Virginia Telehealth Network (VTN) states that many rural HCPs are in areas served by a single broadband provider, where competitive options do not exist. Based on USAC's data, approximately 11 percent of RHC Primary Program applicants outside Alaska receive bids in the competitive bidding process. In response to the *NPRM,* VTN recommends that the Commission consider a streamlined service provider selection process for HCPs that do not have multiple broadband service options, such as simply requiring an HCP to submit a simple certification of its efforts to identify all broadband providers and a description of the broadband service option selected. In the Broadband Services Program, should competitive bidding only be required for consortium applicants, given the experience to date with the current competitive bidding requirement for individual HCPs in the Primary Program? We particularly seek comment on this question from HCPs who have experience with competitive bidding as individual HCPs in the Primary Program. Should the Commission consider not applying a competitive bidding requirement to individual applicants who request only a limited amount of funding? Are there any other applicants that the Commission should exempt from competitive bidding requirements under a Broadband Services Program, if adopted?

c. *Multi-year contracts.* Participants in the Primary Program must submit funding requests annually, but may obtain ''evergreen'' status for certain multi-year contracts. Participants with evergreen contracts are not required to go through the competitive bidding process annually. In contrast, Pilot Program participants were awarded a set maximum award for a multiple-year period and permitted to carry over unused funds from year to year during the duration of the award, which has reduced the paperwork they needed to file and may have allowed them to lock in stable prices for several years. Notably, a significant number of Pilot participants opted to make use of long-term prepaid leases and indefeasible rights-of-use (IRU) arrangements. For the Broadband Services Program, the Commission proposed to allow evergreen contracts, similar to those allowed in the Primary Program, and also to allow funding for the lease of lit or dark fiber, which is typically purchased under an IRU corresponding to the useful life of the fiber.

Commenters have suggested that the Commission could encourage high capacity broadband networks that would support health care providers' telemedicine and broadband needs by allowing HCPs to enter into long term contracts for such networks with carriers or other telecommunications providers. We seek comment on the benefits and drawbacks of providing funding for multi-year contracts, including long-term prepaid leases and IRUs, in the Broadband Services Program. The Nebraska Statewide Telehealth Network (NSTN) recommends that a ''true'' evergreen provision be applied to HCPs with multi-year contracts, which would allow for HCPs with multi-year contracts to apply only once for multiple years of funding.

Would permitting evergreen contracts (as they are implemented today, with the annual filing requirement) be sufficient to allow consortia in the Broadband Services Program to reap the potential benefits of multi-year contracts, while minimizing administrative burdens? Or, would evergreen status need to be coupled with a multi-year award, and if so, would three years be sufficient for the term of the award, or would some other period be more appropriate? We note that long-term prepaid leases and IRUs generally involve a large, upfront payment. For example, the full cost for a dark fiber IRU is typically paid for in advance. If the Commission permitted long-term prepaid leases and/or IRUs in the Broadband Services Program, how should it deal with upfront payments? How would funding multi-year contracts impact the calculation and forecasting of demand for RHC support? What protections should be put in place to protect against waste, fraud and abuse? For instance, would the measures used in the Pilot Program for such arrangements be useful in the Broadband Services Program (such as sustainability plans, minimum contract length, and repayment requirements)? If so, should those same measures be used, or should they be modified in any respect?

d. *Existing Master Services Agreements (MSAs).* MSAs permit applicants to opt into a contract for eligible services that have been negotiated by federal or state government entities without having to engage in negotiations with individual service providers. The U.S. Department of Health and Human Services has recommended that the Commission exempt from competitive bidding requirements federal health care providers (such as the Indian Health Service) that are required to use the General Services Administration Networx contract for telecommunications services. Should the Commission permit applicants for the Broadband Services Program to take services from an MSA, so long as the original master contract was awarded through a competitive process? What specific rules should be in place (*e.g.,* an exception to the competitive bidding requirement) in order for HCPs to take advantage of MSAs? Should Pilot program participants that have exhausted Pilot program funding be able to obtain support from the Broadband Services program for services pursuant to MSAs that were negotiated by the Pilot projects?

e. *Eligible service providers.* The *NPRM* proposed that broadband services supported by the Broadband Services Program may be provided by ''a telecommunications carrier or other qualified broadband access service provider.'' In response to the *NPRM,* some Pilot participants expressed concern that this definition would be too narrow, as it might exclude some vendors that responded to RFPs issued by project participants. In the Pilot Program, a wide range of service providers responded to the RFPs issued by the project participants, including telecommunications carriers and companies in the fields of systems integration, optical networking, utilities, construction, electronics and equipment. We seek more focused comment on the specific definition that should be adopted in our rules for eligible providers under the Broadband Services Program, if adopted.

V. Broadband Needs of Rural Health Care Providers

12. Both the *National Broadband Plan* and the *GAO Report* emphasized the importance of determining the broadband needs of health care providers as part of the Commission's reform of its rural health care program. A number of parties have commented on the broadband needs of health care providers, and USAC has filed an informal needs assessment. In light of developments since the issuance of the *NPRM,* we seek to refresh the record on various questions relating to the broadband needs of rural HCPs, with particular attention to how the answers may vary based on the size and type of HCP, and how the broadband needs may change over time.

a. *Telemedicine.* What bandwidth is needed for various types of telemedicine applications? In particular, how widespread is the use of teleradiology, and what bandwidth is required? How widespread is the use of videoconferencing in providing telemedicine, and what bandwidth is required? Will broadband needs

associated with telemedicine likely change over time? What factors will cause the needs to grow? How important are connections between rural HCPs and urban HCPs?

b. *Electronic health records.* How will the current trend toward adoption and exchange of electronic health records affect bandwidth needs? Congress has directed the Medicare and Medicaid programs to provide incentive payments for HCPs that have adopted electronic health records and have achieved ''meaningful use'' of those records, which includes some electronic exchange of those health records. Eventually, achieving ''meaningful use'' is expected to be mandatory for recipients of Medicare and Medicaid payments. What is the impact of ''meaningful use'' incentive payments and requirements on likely demand for broadband connectivity for rural HCPs? What is the likely impact of participation by rural HCPs in Health Information Exchanges?

c. *Other telehealth applications.* What are the likely broadband needs for other telehealth applications (*e.g.,* training and technical support for health care purposes and health IT applications)?

d. *Service quality requirements.* We also seek comment on the needs of rural HCPs for such service quality features as dedicated connections, redundancy, low latency, and lack of jitter. How much will these added levels of quality add to the cost of broadband services for HCPs? Will privacy and security requirements applicable to health care data exchange affect HCP broadband service quality needs?

e. *Cost savings from broadband connectivity.* In the *NPRM,* the Commission recognized that the use of broadband by health care providers has the potential to enable them not just to provide higher quality health care but also to realize substantial savings in the cost of providing health care. Many of the Pilot projects report that the broadband connectivity made possible by the program helped to generate such cost savings. We solicit specific information regarding the nature and magnitude of cost savings that HCPs have been able to achieve through use of broadband, as well as information and data regarding potential for cost savings through telemedicine and other telehealth applications. Many of these cost savings are realized by the HCPs themselves, through reductions in the number of and length of hospital stays, through savings in patient transport costs, through savings in transportation costs and time for medical professionals, and through other Health IT applications (such as consolidation of billing and scheduling functions, transmission and remote storage of images and medical records, and video-based training of health care and health IT professionals). Some commenters note that telemedicine also creates the potential for rural HCPs to increase revenues, because telemedicine can enable rural providers to treat more of their patients locally. Telemedicine also yields costs savings for patients and their families, who can avoid the cost of travel and loss of workdays by receiving treatment closer to home. Some of the cost savings from telehealth applications accrue not directly to the HCP or the patients, but rather to other governmental entities (through savings in Medicare and Medicaid expenditures) and to other participants in the health care system (such as private insurers). We solicit the submission of specific information on all these possible sources of cost savings, including cost data and any studies documenting cost savings.

VI. Procedural Matters

13. Interested parties may file comments and reply comments on or before the dates indicated on the first page of this document. Comments are to reference WC Docket No. 02–60 and DA 12–1166 and may be filed using the Commission's Electronic Comment Filing System (ECFS). *See Electronic Filing of Documents in Rulemaking Proceedings,* 63 FR 24121 (1998).

- *Electronic Filers:* Comments may be filed electronically using the Internet by accessing the ECFS: *http://fjallfoss.fcc.gov/ecfs2/.*
- *Paper Filers:* Parties who choose to file by paper must file an original and one copy of each filing. If more than one docket or rulemaking number appears in the caption of this proceeding, filers must submit two additional copies for each additional docket or rulemaking number.

Filings can be sent by hand or messenger delivery, by commercial overnight courier, or by first-class or overnight U.S. Postal Service mail. All filings must be addressed to the Commission's Secretary, Office of the Secretary, Federal Communications Commission.

- All hand-delivered or messenger-delivered paper filings for the Commission's Secretary must be delivered to FCC Headquarters at 445 12th St. SW., Room TW–A325, Washington, DC 20554. The filing hours are 8:00 a.m. to 7:00 p.m. All hand deliveries must be held together with rubber bands or fasteners. Any envelopes and boxes must be disposed of before entering the building.
- Commercial overnight mail (other than U.S. Postal Service Express Mail and Priority Mail) must be sent to 9300 East Hampton Drive, Capitol Heights, MD 20743.
- U.S. Postal Service first-class, Express, and Priority mail must be addressed to 445 12th Street SW., Washington, DC 20554.
- People with Disabilities: To request materials in accessible formats for people with disabilities (braille, large print, electronic files, audio format), send an email to *fcc504@fcc.gov* or call the Consumer & Governmental Affairs Bureau at 202–418–0530 (voice), 202–418–0432 (tty).

In Addition, One Copy of Each Pleading Must Be Sent to Each of the Following

(1) Chin Yoo, Telecommunications Access Policy Division, Wireline Competition Bureau, 445 12th Street SW., Room 5–A441, Washington, DC 20554; email: *Chin.Yoo@fcc.gov;* (2) Charles Tyler, Telecommunications Access Policy Division, Wireline Competition Bureau, 445 12th Street SW., Room 5–A452, Washington, DC 20554; email: *Charles.Tyler@fcc.gov.*

14. This matter shall be treated as a ''permit-but-disclose'' proceeding in accordance with the Commission's *ex parte* rules. Persons making *ex parte* presentations must file a copy of any written presentation or a memorandum summarizing any oral presentation within two business days after the presentation (unless a different deadline applicable to the Sunshine period applies). Persons making oral *ex parte* presentations are reminded that memoranda summarizing the presentation must (1) list all persons attending or otherwise participating in the meeting at which the *ex parte* presentation was made, and (2) summarize all data presented and arguments made during the presentation. If the presentation consisted in whole or in part of the presentation of data or arguments already reflected in the presenter's written comments, memoranda or other filings in the proceeding, the presenter may provide citations to such data or arguments in his or her prior comments, memoranda, or other filings (specifying the relevant page and/or paragraph numbers where such data or arguments can be found) in lieu of summarizing them in the memorandum. Documents shown or given to Commission staff during *ex parte* meetings are deemed to be written *ex parte* presentations and must be filed consistent with rule § 1.1206(b). In proceedings governed by rule § 1.49(f) or for which the Commission has made available a

method of electronic filing, written *ex parte* presentations and memoranda summarizing oral *ex parte* presentations, and all attachments thereto, must be filed through the electronic comment filing system available for that proceeding, and must be filed in their native format (*e.g.,* .doc, .xml, .ppt, searchable .pdf). Participants in this proceeding should familiarize themselves with the Commission's *ex parte* rules.

Federal Communications Commission.

Trent B. Harkrader,

Division Chief, Telecommunications Access Policy Division, Wireline Competition Bureau.

[FR Doc. 2012–18273 Filed 7–25–12; 8:45 am]

BILLING CODE 6712–01–P

DEPARTMENT OF DEFENSE

GENERAL SERVICES ADMINISTRATION

NATIONAL AERONAUTICS AND SPACE ADMINISTRATION

48 CFR Parts 8, 12, 16, and 52

[FAR Case 2011–025; Docket 2011–0025; Sequence 1]

RIN 9000–AM28

Federal Acquisition Regulation; Changes to Time-and-Materials and Labor-Hour Contracts and Orders

AGENCIES: Department of Defense (DoD), General Services Administration (GSA), and National Aeronautics and Space Administration (NASA).

ACTION: Proposed rule.

SUMMARY: DoD, GSA, and NASA are proposing to amend the Federal Acquisition Regulation (FAR) to provide additional guidance when raising the ceiling price or otherwise changing the scope of work for a time-and-materials (T&M) or labor-hour (LH) contract or order.

DATES: Interested parties should submit written comments to the Regulatory Secretariat at one of the addressees shown below on or before September 24, 2012 to be considered in the formation of the final rule.

ADDRESSES: Submit comments in response to FAR Case 2011–025 by any of the following methods:

- *Regulations.gov: http://www.regulations.gov.* Submit comments via the Federal eRulemaking portal by searching for ''FAR Case 2011–025''. Select the link ''Submit a Comment'' that corresponds with ''FAR Case 2011–025.'' Follow the instructions provided at the ''Submit a Comment'' screen. Please include your name, company name (if any), and ''FAR Case 2011–025'' on your attached document.
- *Fax:* 202–501–4067.
- *Mail:* General Services Administration, Regulatory Secretariat (MVCB), ATTN: Hada Flowers, 1275 First Street NE., 7th Floor, Washington, DC 20417.

Instructions: Please submit comments only and cite FAR Case 2011–025, in all correspondence related to this case. All comments received will be posted without change to *http://www.regulations.gov,* including any personal and/or business confidential information provided.

FOR FURTHER INFORMATION CONTACT: Mr. Michael O. Jackson, Procurement Analyst, at 202–208–4949, for clarification of content. For information pertaining to status or publication schedules, contact the Regulatory Secretariat at 202–501–4755. Please cite FAR Case 2011–025.

SUPPLEMENTARY INFORMATION:

I. Background

DoD, GSA, and NASA are proposing to revise the FAR to implement a policy that provides additional guidance to address actions required when raising the ceiling price for a T&M or LH contract or order. FAR Case 2009–043, ''Time-and-Materials and Labor-Hour Contracts for Commercial Items'', was published as a final rule in the **Federal Register** at 77 FR 194 on January 3, 2012. As a result of FAR case 2009–043, the Civilian Agency Acquisition Council and the Defense Acquisition Regulations Council (Councils) were concerned that contracting officers may erroneously conclude that a Determination and Findings (D&F) is always sufficient to justify a change in the ceiling price.

II. Discussion and Analysis

This FAR case provides additional guidance to address actions required when raising the ceiling price or otherwise changing the general scope of a T&M or LH contract or order. The case provides guidance to address this issue for the respective parts of the FAR addressing T&M and LH contracts or orders, such as FAR 8.404, 12.207, and 16.601.

The Government Accountability Office stated within Matter of Specialty Marine, Inc., B–293871, B–293871.2, 2004 Comp. Gen. Proc. Dec. P130, (June 17, 2004) that: ''When a protester alleges that an order is outside the scope of the contract, we analyze the protest in essentially the same manner as those in which the protester argues that a contract modification is outside the scope of the underlying contract. The fundamental issue is whether issuance of the task or delivery order in effect circumvents the general statutory requirement under the Competition in Contracting Act (CICA) that agencies 'obtain full and open competition through the use of competitive procedures' when procuring their requirements. See 10 U.S.C. 2304(a)(1)(A) (2000).

In determining whether a task or delivery order (or modification) is outside the scope of the underlying contract, and thus falls within CICA's competition requirement, our Office examines whether the order is materially different from the original contract. Evidence of a material difference is found by reviewing the circumstances attending the original procurement; any changes in the type of work, performance period, and costs between the contract as awarded and the order as issued; and whether the original solicitation effectively advised offerors of the potential for the type of orders issued. Overall, the inquiry is whether the order is one which potential offerors would have reasonably anticipated.''

The Councils propose the following changes:

FAR 8.404(h)(3)(iv). This paragraph is revised to require analysis and documentation for changes in T&M or LH orders and to clarify that changes in the general scope should be justified as non-competitive new work. In addition, a clarification is added that if modifying an order to add open market items, the contracting officer must also comply with the requirements at FAR 8.402(f).

FAR 12.207(b)(1)(ii)(C). This paragraph is revised to require analysis and documentation for changes in T&M or LH contracts or orders and to clarify that changes in the general scope should be justified as non-competitive new work. The new proposed language distinguishes between changes that modify the general scope of a contract and changes that modify the general scope of an order. For the changes that modify the general scope of the contract, contracting officers are advised to follow the procedures at FAR 6.303. For the changes that modify the general scope of an order, contracting officers are advised to follow the procedures at FAR 8.405–6 for orders issued under the Federal Supply Schedules. For the orders issued under multiple award task and delivery order contracts, contracting officers are advised to follow the procedures at FAR 16.505(b)(2).

FAR 16.505(b)(4) and (5). These paragraphs are added to reference

additional requirements for cost reimbursement, T&M or LH orders.

FAR 16.601. This section is revised to require analysis and documentation for changes in T&M or LH contracts or orders and to clarify that changes in the general scope should be justified as non-competitive new work. FAR 16.601(d) has also been amended to make it clear that a D&F is required for T&M orders. This FAR change will clarify that a T&M D&F is required for each non-commercial item T&M order under a part 16 indefinite-delivery indefinite-quantity (IDIQ) contract. This change is necessary both to keep part 16 parallel with part 8 (which requires a D&F for each part 8 T&M order) and to clarify an unintended lack of clarity in the 2006 FAR changes that rewrote much of the T&M policies in the FAR (see FAC 2005–15, published in the **Federal Register** at 71 FR 74656 on December 12, 2006). Currently, only part 12 includes a direct requirement for T&M orders to be authorized by a T&M D&F, but this applies only to commercial items. This FAR case is adding a clarification to part 8 to repeat that policy to ensure that part 8 T&M orders are also each authorized by a T&M D&F. With this case, part 16 is also being changed to explicitly require T&M D&Fs for orders.

FAR 16.601(e). The new proposed language distinguishes between changes that modify the general scope of a contract and changes that modify the general scope of an order. For the changes that modify the general scope of the contract, contracting officers are advised to follow the procedures at FAR 6.303. For the changes that modify the general scope of an order, contracting officers are advised to follow the procedures at FAR 8.405–6 for orders issued under the Federal Supply Schedules. For the orders issued under multiple award task and delivery order contracts, contracting officers are advised to follow the procedures at FAR 16.505(b)(2).

III. Executive Order 12866 and 13563

Executive Orders (E.O.s) 12866 and 13563 direct agencies to assess all costs and benefits of available regulatory alternatives and, if regulation is necessary, to select regulatory approaches that maximize net benefits (including potential economic, environmental, public health and safety effects, distributive impacts, and equity). E.O. 13563 emphasizes the importance of quantifying both costs and benefits, of reducing costs, of harmonizing rules, and of promoting flexibility. This is not a significant regulatory action and, therefore, was not subject to review under section 6(b) of E.O. 12866, Regulatory Planning and Review, dated September 30, 1993. This rule is not a major rule under 5 U.S.C. 804.

IV. Regulatory Flexibility Act

The change may have a significant economic impact on a substantial number of small entities within the meaning of the Regulatory Flexibility Act 5 U.S.C. 601, *et seq.* The Initial Regulatory Flexibility Analysis (IRFA) is summarized as follows:

The purpose of this case is to clarify the procedures necessary to raise the ceiling price of a time-and-materials (T&M) or labor-hour (LH) contract or order.

In finalizing FAR rule 2009–043 ''Time-and-Materials and Labor-Hour Contracts for Commercial Items'' it became apparent that the guidance in the FAR on raising the ceiling price for a T&M or LH contract or order was not clear or consistent throughout the FAR. This case was opened to clarify the process and necessary documentation when raising the ceiling price for these contracts or orders.

This rule deals with the administration of T&M and LH contracts and orders and most likely will not have a direct effect on contractors. In FY 2011, the Federal Government awarded 23,023 T&M and LH contracts and orders of which 6,315 went to small businesses. This rule is not likely to affect how many large and small businesses are awarded this type of contract.

This rule does not add any new information collection requirements.

The rule does not duplicate, overlap, or conflict with any other Federal rules.

No alternatives were determined that will accomplish the objectives of the rule.

The Regulatory Secretariat will be submitting a copy of the Initial Regulatory Flexibility Analysis (IRFA) to the Chief Counsel for Advocacy of the Small Business Administration. A copy of the IRFA may be obtained from the Regulatory Secretariat. The Councils invite comments from small business concerns and other interested parties on the expected impact of this rule on small entities.

DoD, GSA, and NASA will also consider comments from small entities concerning the existing regulations in subparts affected by this rule in accordance with 5 U.S.C. 610. Interested parties must submit such comments separately and should cite 5 U.S.C. 610 (FAR Case 2011–025) in correspondence.

V. Paperwork Reduction Act

The proposed rule does not contain any information collection requirements that require the approval of the Office of Management and Budget under the Paperwork Reduction Act (44 U.S.C. chapter 35).

List of Subjects in 48 CFR Parts 8, 12, 16, and 52

Government procurement.

Dated: July 20, 2012.

Laura Auletta,

Director, Office of Governmentwide Acquisition Policy, Office of Acquisition Policy, Office of Governmentwide Policy.

Therefore, DoD, GSA, and NASA propose amending 48 CFR parts 8, 12, 16, and 52 as follows:

1. The authority citation for 48 CFR parts 8, 12, 16, and 52 is revised to read as follows:

Authority: 40 U.S.C. 121(c); 10 U.S.C. chapter 137; and 51 U.S.C. 20113.

PART 8—REQUIRED SOURCES OF SUPPLIES AND SERVICES

2. Amend section 8.404 by revising paragraph (h)(3)(iv) to read as follows:

8.404 Use of Federal Supply Schedules.

* * * * *

(h) * * *

(3) * * *

(iv) Prior to an increase in the ceiling price of a time-and-materials or labor-hour order, the ordering activity shall—

(A) Conduct an analysis of pricing and other relevant factors to determine if the action is in the best interest of the Government and document the order file;

(B) Follow the procedures at 8.405–6 for a change that modifies the general scope of the order; and

(C) Comply with the requirements at 8.402(f) when modifying an order to add open market items.

PART 12—ACQUISITION OF COMMERCIAL ITEMS

3. Amend section 12.207 by revising paragraph (b)(1)(ii)(C) to read as follows:

12.207 Contract type.

* * * * *

(b)(1) * * *

(ii) * * *

(C) Prior to increasing the ceiling price of a time-and-materials or labor-hour contract or order, shall—

(*1*) Conduct an analysis of pricing and other relevant factors to determine if the action is in the best interest of the Government;

(*2*) Document the decision in the contract or order file; and

(*3*) When making a change that modifies the general scope of—

(*i*) A contract, follow the procedures at 6.303;

(*ii*) An order issued under the Federal Supply Schedules, follow the procedures at 8.405–6; or

(*iii*) An order issued under multiple award task and delivery order contracts, follow the procedures at 16.505(b)(2).

* * * * *

PART 16—TYPE OF CONTRACTS

16.504 [Amended]

4. Amend section 16.504 by removing from paragraph (a)(4)(v) ''(see 16.505(b)(6))'' and adding ''(see 16.505(b)(8))'' in its place.

5. Amend section 16.505 by—

a. Removing from paragraph (b)(1)(iv)(E) ''paragraph (b)(4)'' and adding ''paragraph (b)(6)'' in its place;

b. Redesignating paragraphs (b)(4) through paragraphs (b)(6) as paragraphs (b)(6) through (b)(8), respectively; and

c. Adding new paragraphs (b)(4) and (b)(5).

The additions read as follows:

16.505 Ordering.

* * * * *

(b) * * *

(4) For additional requirements for cost reimbursement orders see 16.301–3.

(5) For additional requirements for time-and-materials or labor-hour orders, see 16.601(e).

* * * * *

6. Amend section 16.601 by—

a. Removing from paragraph (c)(2)(i) ''(see 16.601(e)(1))'' and adding ''(see 16.601(f)(1))'' in its place;

b. Revising paragraph (d) introductory text and paragraph (d)(2);

c. Redesignating paragraph (e) as paragraph (f); and

d. Adding a new paragraph (e),

The revisions and addition read as follows.

16.601 Time-and-materials contracts.

* * * * *

(d) *Limitations.* A time-and-materials contract or order may be used only if—

* * * * *

(2) The contract or order includes a ceiling price that the contractor exceeds at its own risk. Also see 12.207(b) for further limitations on use of time-and-materials or labor-hour contracts for acquisition of commercial items.

(e) *Post award requirements.* Prior to an increase in the ceiling price of a time-and-materials or labor-hour contract or order, the contracting officer shall—

(1) Conduct an analysis of pricing and other relevant factors to determine if the action is in the best interest of the Government;

(2) Document the decision in the contract or order file; and

(3) When making a change that modifies the general scope of—

(i) A contract, follow the procedures at 6.303;

(ii) An order issued under the Federal Supply Schedules, follow the procedures at 8.405–6; or

(iii) An order issued under multiple award task and delivery order contracts, follow the procedures at 16.505(b)(2).

* * * * *

PART 52—SOLICITATION PROVISIONS AND CONTRACT CLAUSES

52.216–29 [Amended]

7. Amend section 52.216–29 by removing from the introductory paragraph ''16.601(e)(1)'' and adding ''16.601(f)(1)'' in its place.

52.216–30 [Amended]

8. Amend section 52.216–30 by removing from the introductory paragraph ''16.601(e)(2)'' and adding ''16.601(f)(2)'' in its place.

52.216–31 [Amended]

9. Amend section 52.216–31 by removing from the introductory paragraph ''16.601(e)(3)'' and adding ''16.601(f)(3)'' in its place.

[FR Doc. 2012–18276 Filed 7–25–12; 8:45 am]

BILLING CODE 6820–EP–P

DEPARTMENT OF THE INTERIOR

Office of the Secretary

48 CFR Parts 1401, 1452, and 1480

RIN 1090–AB03

Acquisition Regulations; Buy Indian Act; Procedures for Contracting

AGENCY: Assistant Secretary for Policy, Management and Budget, Interior.

ACTION: Proposed rule.

SUMMARY: The Department of the Interior proposes to issue regulations guiding implementation of the Buy Indian Act, which provides the Bureau of Indian Affairs with authority to set aside procurement contracts for Indian-owned and controlled businesses. This rule supplements the Federal Acquisition Regulation (FAR) and the Department of the Interior Acquisition Regulations (DIAR).

DATES: Comments must be received on or before September 24, 2012. Tribal consultation meetings to discuss this rule will take place on Tuesday, August 14, 2012, from 8 a.m. to noon; Wednesday, August 15, 2012, from 3 p.m. to 6 p.m.; Tuesday, August 21, 2012, from 8 a.m. to noon; and Thursday, August 23, 2012, from 8 a.m. to noon.

ADDRESSES: You may submit comments, identified by the Number by any of the following methods:

- *Federal rulemaking portal: http://www.regulations.gov.*
- *Email: consultation@bia.gov.*
- *Mail or hand-delivery:* Elizabeth Appel, Office of Regulatory Affairs & Collaborative Action—Indian Affairs, U.S. Department of the Interior, 1849 C Street NW., MS–4141, Washington, DC 20240
- See the **SUPPLEMENTARY INFORMATION** section of this notice for the locations of the tribal consultation meetings.

FOR FURTHER INFORMATION CONTACT: Jonodev Chaudhuri, Office of the Assistant Secretary—Indian Affairs, (202) 208–7163; *jonodev.chaudhuri@bia.gov;* or David Brown, Office of Acquisitions—Indian Affairs, (703) 390–6605, *David.Brown@bia.gov.*

SUPPLEMENTARY INFORMATION:

I. Background
II. Tribal Consultations Planned
III. Statutory Authority
IV. Overview of Proposed Rule
V. Development of Proposed Rule
A. Prior Publication and Comment Solicitation
B. Summary of Comments
1. Goals for Set-Asides
2. Consistency With the Federal Acquisition Regulation (FAR)
3. Definitions
4. Indian Economic Enterprise Definition and Representation
5. Restrictions on Construction
6. Deviations
7. Subcontracting
8. Indian Preference Requirements
9. Buy Indian Implementation by Other Bureaus
10. Other
VI. Procedural Requirements
A. Regulatory Planning and Review (Executive Order 12866)
B. Regulatory Flexibility Act
C. Small Business Regulatory Enforcement Fairness Act (SBREFA)
D. Unfunded Mandates Reform Act
E. Takings Implications (Executive Order 12630)
F. Federalism (Executive Order 13132)
G. Civil Justice Reform (Executive Order 12988)
H. Consultation With Indian Tribes (Executive Order 13175)
I. Paperwork Reduction Act
J. National Environmental Policy Act
K. Effects on the Energy Supply (E.O. 13211)
L. Clarity of This Regulation
M. Public Availability of Comments

I. Background

The Bureau of Indian Affairs has obtained services and supplies from Indian sources using the Buy Indian Program since 1965, based on policy

memoranda and acquisition. This rule is proposed to describe uniform administrative procedures that the BIA will use in all of its locations to encourage procurement relationships with eligible Indian Economic Enterprises in the execution of the Buy Indian Act.

This proposal incorporates the Assistant Secretary—Indian Affairs decision to increase economic development and employment of Indian persons by reducing the percentage of Indian ownership of business enterprises from a mandatory 100 percent to minimum 51 percent.

In addition, the regulations respond to and incorporate the nuances of the Section 831 of the National Defense Authorization Act for Fiscal Year 1991 (10 U.S.C. 2301 note) that amended 25 U.S.C. 47 to allow Indian firms to participate in the Department of Defense's Mentor-Protégé Program and not lose their eligibility for contracts awarded under the authority of the Buy Indian Act. This proposed rule includes language stating that participation in the Mentor-Protégé program has no effect on eligibility for contracts awarded under the authority of the Buy Indian Act.

This proposed rule also includes revisions to address the input received as a result of earlier publications and three consultation hearings in Indian Country.

II. Tribal Consultations Planned

The Office of the Assistant Secretary—Indian Affairs will be hosting tribal consultation meetings addressing this rule at the following dates and locations:

Date	Time	Venue
August 14, 2012	8 a.m.–12 p.m	National Indian Programs Training Center, 1011 Indian School Road NW., Suite 254, Albuquerque, NM 87104, (505) 563–5400.
August 15, 2012	3 p.m.–6 p.m	Holiday Inn Grand (In conjunction with NADC Conference 2012), 5500 Midland Road, Billings, MT 59101, (406) 248–7701.
August 21, 2012	8 a.m.–12 p.m	Hilton Sacramento Arden West, 2200 Harvard Street, Sacramento, CA 95815, (916) 924–4900.
August 23, 2012	8 a.m.–12 p.m	Mystic Lake Casino Hotel, 2400 Mystic Lake Boulevard, Prior Lake, MN 55372, (952) 445–9000.

Tribal leader letters announcing these consultation meetings were distributed on July 5, 2012, providing advance notice of these consultations.

III. Statutory Authority

The authority to issue regulations is vested in the Secretary of the Interior by 5 U.S.C. 301. The authorizing statute is section 23 of the Act of June 25, 1910 (25 U.S.C. 47, as amended).

IV. Overview of Proposed Rule

This rule supplements the Federal Acquisition Regulation (FAR) and the Department of the Interior Acquisition Regulations (DIAR). For this reason the rule is issued by the Assistant Secretary for Policy, Management and Budget. This rule formalizes an administrative procedure for all Bureau of Indian Affairs acquisition activities and locations to ensure uniformity for eligible Indian Economic Enterprises that submit offers under solicitations set aside under the Act and this part.

A. Numbering System

This rule follows the numbering system established by the FAR and supplements the DIAR. Section 1401.303(a)(3) of 48 CFR authorizes each Interior bureau to codify regulations implementing the DIAR.

Where material in the FAR and/or DIAR do not require BIA implementing regulations, there will be no corresponding section number in the supplementary material.

B. How This Rule Fits With the Indian Affairs Acquisition Regulations

When finalized, the rule will govern, and be incorporated into the Indian Affairs Acquisition Regulations (IAAR), which establishes uniform acquisition policies and procedures for BIA, and is part of the Indian Affairs Manual (IAM). Handbooks, Acquisition Guidance Releases and the BIA's Guidelines on the Charge Card Program supplement the IAAR provisions of the IAM.

C. What This Rule Does

The BIA has encouraged major initiatives for economic development and employment of Indian persons, such as reducing the required percentage of Indian ownership of Indian economic enterprises from 100 percent to 51 percent. In support of these initiatives, the previously proposed rules have been revised and are published here as a new proposed rule.

Section 831 of the National Defense Authorization Act for Fiscal Year 1991 (10 U.S.C. 2301 note) amended 25 U.S.C. 47 to allow Indian firms to participate in the Department of Defense's Mentor-Protégé Program and not lose their eligibility for contracts awarded under the authority of the Buy Indian Act. This rule includes language stating that participation in the Mentor-Protégé program has no effect on eligibility for contracts awarded under the authority of the Buy Indian Act.

This rule formalizes an administrative procedure for all Bureau acquisition activities/locations to ensure that the Bureau will apply the procedures uniformly for eligible Indian Economic Enterprises that submit offers under solicitations set aside under the Act and this part.

V. Development of Proposed Rule

A. Prior Publication and Comment Solicitation

This rule has been in development for decades. BIA published proposed rules in the **Federal Register** on October 8, 1982 (47 FR 44678), November 15, 1984 (49 FR 45187), June 30, 1988 (53 FR 24738), and September 12, 1991 (56 FR 46468). Public comments received by BIA were reviewed, addressed in succeeding editions, and incorporated in this proposed rule, where applicable.

Notification regarding a series of three public consultation sessions was published in the **Federal Register** on October 18, 2001 (66 FR 52931). The consultation sessions were conducted in Oklahoma City, Oklahoma, on October 25, 2001; in Scottsdale, Arizona, on November 8, 2001; and in Portland, Oregon, on November 15, 2001.

Most recently, BIA circulated a draft rule and held a series of three tribal consultation sessions in 2010. The consultation sessions were conducted in Portland, Oregon, on April 26, 2010; in Rapid City, South Dakota, on April 28, 2010; and in Tulsa, Oklahoma, on April 29, 2010. BIA published notice of these consultations in the **Federal Register** on March 26, 2010 (75 FR 14547). Comments received at all these consultation meetings were reviewed

and incorporated in this proposed rule, where applicable.

B. Summary of Comments

In addition to changes addressing the following comments, we made several editorial changes to the text of the proposed rule to clarify our intent regarding specific provisions, including changes to subchapter A. A significant portion of BIA's acquisition regulation covered under subchapter A does not impact a contractor's ability to contract with the BIA and therefore does not require publication in 48 CFR part 14. These editorial changes are minor and do not affect the substance or intent of the rule.

The following is a summary of some of the main categories of comments and BIA's responses.

1. Goals for Set-Asides

Comment: One commenter recommended additional language identifying program goals for awarding contracts to Indian Economic Enterprises.

Response: This rule establishes that BIA will conduct a market survey to determine whether an Indian Economic Enterprise is appropriate for every contract it solicits.

2. Consistency With the Federal Acquisition Regulation (FAR)

Comment: One comment expressed concern about references to the Federal Acquisition Regulation (FAR) on the premise that the Buy Indian regulation may seem to be in conflict with the FAR.

Response: The Buy Indian Act regulation may be compared to the spoke of an umbrella with the FAR as the umbrella. The two regulations work in tandem. The regulatory authority that encompasses the Buy Indian set-aside authority may be found in FAR 6.302–5, which authorizes ''other than full and open competition'' when ''authorized or required by law.'' The law authorizing Buy Indian set-asides is 25 U.S.C. 47, as amended.

Comment: Several comments questioned whether there was an inconsistency in the proposed rule regarding small business set-asides for acquisitions valued between $3,001 and $150,000, specifically, the relationship of the Act with regard to eligible Indian enterprises and the order of preference in FAR 8.001.

Response: The Bureau must adhere to the Small Business Act Requirements, as it governs small purchases, and at the same time continue its policy of utilizing the Buy Indian Act. To this end, it has attempted to join the two requirements in the proposed section 1480.503(b). When the Bureau contracting officer cannot make an advance determination of a potential award as an Indian small business set-aside under the Buy Indian Act, the Bureau must follow the order of preference in the Federal Acquisition Regulation (see FAR 8.001). If an award cannot be made to an eligible Indian firm that is responsible, responsive, and is price reasonable, then the Buy Indian Act set-aside notice is canceled. However, the Bureau may not move from a Buy Indian Act set-aside to full and open competition without first giving consideration to other authorized procurement set-aside programs.

Comment: One commenter requested clarification of the size standards and stated that the draft regulation would allow the Bureau to contract only with Indian economic enterprises that are also small businesses, thereby disqualifying large Indian economic enterprises.

Response: The rule mirrors the guidance of FAR Part 19, and specifically FAR section 19.502, which enumerates when contracts shall be set aside for small businesses and when deviations are permitted.

Comment: One commenter asked why the FAR is restated instead of citing applicable FAR parts and subparts. Another commenter stated that the rule contains too many references to the FAR and DIAR, which makes it difficult for a layperson to understand.

Response: The Bureau has reviewed the rule and removed any unnecessarily duplicative restatement of the FAR and FAR and DIAR citations.

3. Definitions

Comment: One comment expressed opposition to the proposed rule definition for ''Indian'' (1452.280–4 and 1480.201), and stated an opinion that the term in the rule should incorporate a quarter-degree blood requirement as a requirement for being an enrolled tribal member.

Response: The commenter appears to have mixed two distinct issues. Tribes may set a blood quantum for membership, and many have. In some instances tribes, and the Bureau, have used the degree of Indian or tribal blood as one factor in establishing the relative priorities among eligible participants. However, the Bureau cannot impose a blood quantum requirement for initial eligibility for its programs unless the legislation authorizing the program allows it. The Bureau programs are available to all tribal members regardless of blood degree. The Bureau defers to tribal governments in the setting of the tribe's own standards for enrollment and membership so long as the standards reflect a meaningful bilateral, political relationship between the tribe and its members.

Comment: Another comment stated that the rule simply states rather than employs or invokes 25 U.S.C. 479 and 479a regarding ''who is an Indian'' and therefore who is eligible.

Response: The rule relies upon 25 U.S.C. 479, which defines ''Indian'' as a member of a tribe.

Comment: Another comment expressed disagreement with the proposed rule definition of ''Indian land'' (1480.201), citing consideration for the term ''Indian country,'' as found in 18 U.S.C. 1151.

Response: The purpose of defining the term ''Indian land'' is to assist in determining when the Indian preference clauses set forth in the DIAR must be inserted into a Buy Indian Act set-aside contract under section 1480.601(a) of the rule. In contrast, the term ''Indian country'' defines Federal criminal jurisdiction in Indian areas and contains references to ''dependent Indian communities'' and to ''Indian allotments,'' which do not provide sufficient guidance in determining the applicability of Indian preference clauses. Moreover, several comments were directed to the language in proposed section 1480.401(b) with regard to construction. The Bureau has changed the language to comply with FAR 6.1 and 6.2, as applicable to set-aside awards.

Comment: One comment asked for a definition of ''Indian reservation.''

Response: The rule now includes a definition of ''Indian reservation'' based on the DIAR section 1452.226–70.

4. Indian Economic Enterprise Definition and Representation

a. Fifty-One (51) Percent Indian Ownership

Comment: A number of comments objected to formalizing by regulation the existing Bureau policy of having a minimum 51 percent Indian ownership of the Indian economic enterprise for participation in the set-aside awards under the Buy Indian Act.

Response: Before January 1988, Bureau policy required participant firms to be 100 percent Indian-owned and controlled. The Bureau changed its policy in order to facilitate and expand economic development on Indian reservations by increasing the opportunities for Indian businesses to obtain operating capital, which was often difficult, if not impossible, to do under the ''100 percent ownership''

policy. The Bureau believes this ''minimum 51 percent ownership'' requirement is a much more realistic requirement that can, with sufficient regulatory safeguards, protect the integrity of the majority Indian owner of the Indian economic enterprise.

Corresponding with the change in Bureau policy from ''100 percent ownership'' to ''a minimum of 51 percent ownership'' of an Indian firm, the Bureau will not certify ''Indian'' ownership of a participating firm. Rather, an economic enterprise will now represent themselves in writing as an Indian economic enterprise in response to a specific Bureau set-aside. The contracting officer or an interested party, as defined in section 1480.201, may raise a protest to the representation declaration of an offeror. The contracting officer will handle the protest under proposed Subpart 1480.9 of the rule. The Bureau believes this approach will be more effective than a Bureau certification system to ensure the eligibility requirements of the Buy Indian Act.

b. Requirement for Daily Business Management

Comment: Some comments expressed concern that the rule does not include sufficient controls to ensure that the Indian economic enterprise is actually owned and controlled by Indians. These comments specifically requested a better description of what constitutes participation in the daily business management of the enterprise.

Response: The proposed rule defines Indian economic enterprise to include additional qualifications beyond what were included in previous versions. In addition to requirements of 51% ownership and management by an Indian or tribe, the Indian or tribe must receive the majority of earnings from the contract. The revised definition also clarifies that the individual Indians or tribal representatives must control management and daily business operations, and to ensure actual control, requires such individuals to possess requisite management or technical capabilities directly related to the primary industry in which the enterprise conducts business. The intent of these changes is to ensure that the individual Indians or tribal representatives take part in the policy-making, budgeting, controlling, directing, coordinating, organizing, and planning functions for an enterprise.

Comment: All challenged offerors should be permitted to respond by any means of contemporary communication (e.g., email).

Response: FAR section 33.206 states that contractor claims must be submitted in writing. A written response provides a record for review.

c. Self-Certification Policy

Comment: One comment expressed concern about the self-certification policy and mentioned that the Environmental Protection Agency disallowed self-certification in their Office of Small and Disadvantaged Business Utilization.

Response: BIA's self-certification policy is a simple representation statement that an offeror submits to support its claim for eligibility to participate in contract awards under the authority of the Buy Indian Act. The information is required in order for the contractor to obtain a benefit in accordance with the Buy Indian Act. In addition to being supported by stiff penalties, the representation is supported by long established elements of enforcement including both contractors and contracting officers who have successfully implemented the policy since 1988.

Comment: One commenter asked whether the Bureau is going to check the validity of self-certifications.

Response: The Contracting Officer is required to check the CCR to identify whether an Indian economic enterprise that self-certified is, in fact, and Indian economic enterprise.

d. Protests of an Entity's Representation as an ''Indian Economic Enterprise''

Comment: The language in proposed section 1480.902 deals with time frames regarding Bureau receipt of a protest from an interested party. Some comments stated that the deadlines were too short to permit lodging a protest. One comment objected to the specific words governing the protest deadline regarding Buy Indian eligibility.

Response: The Bureau must utilize the time frames for small business set-aside awards protests, referenced in FAR 19.302. The time available to lodge a protest is proposed in the rule as ''a protest must be received by the contracting officer not later than 10 days after the basis of protest is known or should have been known, whichever is earlier.'' The Bureau believes the proposed time period to be reasonable for an interested party to lodge a written protest to the contracting officer, thereby conforming to the general principles reflected in FAR Subpart 33.1. Also, this wording is based on FAR 33.103 and has withstood the test of time. Protests based on alleged apparent improprieties in a solicitation are required to be filed before bid opening or the closing date for receipt of proposals. Since this protest would constitute a possible first-step procedure under FAR 33.1, the Bureau is required to: (1) Promptly notify all offerors (successful as well as unsuccessful) within the prescribed time-frame (for sealed bids and competitive negotiations) so that all possible protests may be timely lodged with the Bureau; and (2) seek resolution within the prescribed time-frame before the interested party pursues the protest with the General Accounting Office (GAO). In keeping with the procedures outlined in FAR 33.1 for filing protests, the rule language is considered appropriate.

Comment: One commenter questioned the provision that states that a contract will be considered valid if a protest is received only after the award has been made. This commenter recommended that, instead, the CO investigate the situation and make a determination within 3 days.

Response: The proposed rule's presumptive valid contract language is consistent with FAR 33.104(c)(1) and (5). In accordance with that section of the FAR, the CO need not suspend contract performance or terminate the awarded contract unless the CO believes that an award may be invalidated and a delay in receiving the supplies or service is not prejudicial to the Government's interest.

e. Requesting an Independent Review in an Agency Protest

Comment: One comment expressed concern about a protester to the agency being able to request an independent review.

Response: An independent review may be requested in accordance with FAR 33.103. Prior to submission of an agency protest, all parties must use their best efforts to resolve concerns raised by interested parties at the contracting officer level through open and frank discussions. Where appropriate, alternative dispute resolution methods may be used.

In the event of a protest to the agency, award in the face of protest requires approval by an official other than the contracting officer. In the event of a GAO protest, approval is required by the head of the contracting activity.

5. Restrictions on Construction

Comment: A commenter expressed concern on the general topic of roads construction in relationship to the Indian set-aside program under the Buy Indian Act.

Response: The language in proposed section 1480.401(b) implements the

decision of the Supreme Court in *Andrus* v. *Glover,* 446 U.S. 608, (1980), which upheld an Oklahoma Court's decision that the Bureau could not use the Buy Indian Act to contract for construction. The BIA currently interprets this decision as preventing application of the Buy Indian Act set-aside program to off-reservation construction activities.

Comment: Some sentiment was expressed about difficulties with categorizing certain projects as construction.

Response: The FAR provisions at 22.401 and 37.301 may be used by the contracting officer to determine the appropriate categorization and clause usage. It is solely at the discretion of the contracting office to determine whether a project is construction or service. In order to make this determination, the contracting officer must review the statement of work and make a rational decision based on the information at hand.

6. Deviations

a. Tribal Modification of Buy Indian Acquisition

Comment: Several comments were received regarding the language in proposed section 1480.504–1(b)(14) wherein the Bureau contracting officer would provide written notice to the Indian governing body when a proposed set-aside involves services to be performed in whole or in part on land of that governing body. The objection focused on the Bureau notifying the involved tribe at the same time that the synopsis notice is published in the Governmentwide Point of Entry (GPE) (FedBizOpps). If a tribal resolution was passed opposing the set-aside intention, this Bureau action could require much unnecessary effort and expense on the part of a non-tribal Indian business firm in preparing a bid or proposal. This time and expense could be eliminated if the Indian business firms knew of the tribe's possible resolution of non-support for the set-aside approach.

Response: The Bureau made the necessary change to reflect Public Law 93–638, as amended by Public Law 100–472, to advise a tribe of any work that will be performed within the boundaries of its tribal lands. If the tribe does not (1) give a negative response to the notice or (2) advise the Bureau of its intent to contract for the program within 15 calendar days from the date of publication in FedBizOpps of the solicitation, the Bureau will then proceed with the solicitation. This change addresses the concern expressed by commenters and honors the spirit of Public Law 93–638 as amended by Public Law 100–472.

b. Authority to Deviate

Comment: Several comments requested clarification regarding who may authorize deviations and under what circumstances.

Response: Today's proposed rule clarifies who may authorize deviations based on the contract value thresholds, which were based on the thresholds established in FAR 6.304. The appropriate official will support the deviation by written determinations and findings made part of the contract file. In previous drafts, approval by the Assistant Secretary and BIA Director were necessary for a deviation. This proposed rule instead includes the tiered system for authority to approve to avoid potential delays resulting from going through several layers of approval, while continuing to ensure that deviations are only authorized in limited circumstances.

Comment: One commenter stated that cancellation of an announced opportunity should not be the remedy when only ''unreasonable'' offers are received. This commenter suggested that BIA instead negotiate with the offers or amend the announcement.

Response: Although contracting officers are expected to search for an Indian firm when pursuing a contract under section 8(a) of the Small Business Act, a regulatory provision mandating this action would infringe upon the jurisdiction of the Small Business Administration.

Comment: One commenter asked how the Contracting Officer would address a situation where his or her market research identifies only one Indian economic enterprise for a contract.

Response: The Contracting Officer's market research determines whether BIA solicits with a set-aside for Indian economic enterprises based on whether the government will receive at least two responsible, responsive offers. If the solicitation includes a set-aside but fewer than two responsible, responsive offers from Indian economic enterprises are received, in accordance with FAR 19.502.2, the Contracting Officer will withdraw the set-aside, and resolicit the requirement on an unrestricted basis.

7. Subcontracting

a. Percentages of Subcontracting Allowed

Comment: Several comments stated concern about the general topic of the percentages of subcontracting expressed in the language in proposed section 1452.280–3 and in 1480.602. Some respondents believed the percentages stated were too high for Indian economic enterprises.

Response: The percentages listed in the 1991 proposed rule are required for inclusion by FAR 52.219–14 and apply to all procurement contracts. Section 7(b) of Public Law 93–638, as implemented by DIAR 1452.226–71, applies the Indian preference requirement for employment and subcontracting opportunities under contracts for the benefit of Indians, or contracts made under statutes authorizing contracts with Indians. This principle is reiterated in this rule in sections 1480.503(c), 1452.280–2(c)(2), (3), and (4), 1480.601, and 1480.701(c).

Comment: Several comments requested clarification of whether the subcontracting clause requiring Native American subcontractors is included in solicitations for all BIA subcontracts, or only those BIA contracts awarded using a Buy Indian set-aside.

Response: The proposed rule clarifies that the subcontracting clause is required only for subcontracts to BIA contracts awarded using a Buy Indian set-aside.

b. Subcontracting Limitations and the Definition for ''Cost of the Contract''

Comment: Some comments requested a definition for ''cost of the contract'' as mentioned in 1452.280–2.

Response: The clause entitled ''Subcontracting Limitations'' is based on FAR 52.219–14. The term ''cost of the contract'' means cost to the Government that is the total amount of the contract. Offerors must submit a detailed subcontract plan with their offers as required by 1452.280–2.

c. Verifying Compliance With Subcontracting Limitations

Comment: One comment expressed some concern about verification of compliance after contract award.

Response: The contracting officer and contracting officer's representative are specifically required by 1480.701 to monitor the contractor's compliance with the subcontracting limitations clause, the Indian preference clauses, and the requirements for Indian ownership and daily business management.

8. Indian Preference Requirements

Comment: One comment sought a specific definition of the term ''extent feasible'' as it is used in the Indian Preference clause which is in the Department of the Interior Acquisition Regulation (DIAR) at 1452.226–70.

Response: The words ''extent feasible'' are qualified by the phrase

''consistent with the efficient performance of this contract.'' The clause requires the contractor to maintain records to demonstrate compliance and states that non-compliance is cause for termination. If the contract is over $50,000, and performed on or near a reservation, the contractor is required to appoint a liaison officer who will administer the contractor's Indian preference program, maintain detailed six part records and provide a written semiannual report to the contracting officer. The Indian preference clauses provide reasonable specificity and controls.

9. Buy Indian Implementation by Other Bureaus

Comment: Some comments expressed concern about the loss of contracting opportunities under the Buy Indian set-aside authority when BIA transfers funds to another organization for award of a contract supporting BIA's mission.

Response: The BIA has no regulatory authority beyond itself to implement the Buy Indian Act set-aside authority. A change to transfer the authority along with funds to another agency when entering into an agreement for award of a contract supporting BIA's mission would require a different statute. BIA does encourage the implementation of the Indian Preference requirement under Section 7(b) of Public Law 93–638.

Comment: Several commenters asked who the rule will apply to—and specifically whether the Indian Health Service (IHS) will be bound by this rule.

Response: The BIA is promulgating this rule; therefore, the rule will apply only to BIA.

10. Other

Comment: One commenter suggested that the organization of the clauses to be inserted into solicitations be rearranged so that the definitions appear at the end, rather than at the beginning, of the clauses.

Response: BIA has chosen to retain the current organization for consistency with FAR Part 1 and the standard practice of defining terms prior to their use in clauses.

Comment: One commenter suggested imposing an order of preference for awarding Buy Indian set-asides that would give first preference to individually owned Indian concerns, then to tribal concerns, then to tribal 8(a) concerns, and finally Indian concerns participating in the Mentor-Protégé program.

Response: BIA interprets the purpose of the Buy Indian Act as giving preference to all eligible Indian economic enterprises.

Comment: One commenter asked whether there is a database of debarred Indian economic enterprises.

Response: It is the Contracting Officer's duty to review the debarred listing before making an award. The list is available on the Internet at *www.epls.gov.*

Comment: One commenter asked what the ramifications are for false certification.

Response: The FAR and DIAR include procedures to address false certification. *See* FAR 9.406 (Debarment), FAR 9.407 (Suspension), DIAR 1409.406 (Debarment), and DIAR 1409.407 (Suspension).

Comment: One comment asked why a set-aside cannot be extended if the solicitation hasn't closed and there hasn't been an award made on the contract.

Response: The Contracting Officer's market research determines whether to establish a set-aside for Indian economic enterprises, based on whether the Government will receive at least two reasonable, responsive offers. In accordance with FAR 19.502–2, if the Contracting Officer receives no acceptable offers from responsible small business concerns, the set-aside will be withdrawn and the requirement, if still valid, will be resolicited on an unrestricted basis.

Comment: One comment asked if BIA could review the TERO list to identify Indian economic enterprises.

Response: In addition to checking the CCR, the Contracting Officers may contact local TERO offices as part of their market research to ensure that their research was comprehensive.

Comment: Several comments asked how Indian economic enterprises may identify opportunities for which there is a Buy Indian set-aside.

Response: Indian economic enterprises should monitor *www.FedBizOpps.gov* to identify opportunities for which there is a Buy Indian set-aside.

Comment: A few comments asked how the Buy Indian set-asides work with Public Law 93–638.

Response: The rule provides the Indian tribe with the opportunity to contract under Public Law 93–638 for a requirement taking place on its reservation before BIA issues a solicitation with a Buy Indian set-aside. A tribal contract under Public Law 93–638, is a non-procurement action, so the tribe would not have to compete for the contract (with or without a Buy Indian set-aside). The rule now refers to Public Law 93–638 to clarify that a tribe can invoke its rights under that statute.

VI. Procedural Requirements

A. Regulatory Planning and Review (Executive Orders 12866 and 13563)

Executive Order 12866 provides that the Office of Information and Regulatory Affairs (OIRA) will review all significant rules. The Office of Information and Regulatory Affairs has determined that this rule is not significant.

Executive Order 13563 reaffirms the principles of E.O. 12866 while calling for improvements in the nation's regulatory system to promote predictability, to reduce uncertainty, and to use the best, most innovative, and least burdensome tools for achieving regulatory ends. The executive order directs agencies to consider regulatory approaches that reduce burdens and maintain flexibility and freedom of choice for the public where these approaches are relevant, feasible, and consistent with regulatory objectives. E.O. 13563 emphasizes further that regulations must be based on the best available science and that the rulemaking process must allow for public participation and an open exchange of ideas. We have developed this rule in a manner consistent with these requirements. This rule is also part of the Department's commitment under the Executive Order to reduce the number and burden of regulations.

B. Regulatory Flexibility Act

The Department of the Interior certifies that this document will not have a significant economic effect on a substantial number of small entities under the Regulatory Flexibility Act (5 U.S.C. 601 *et seq.*). The total annual value of Buy Indian contracts is less than $45 million awarded to fewer than 200 contractors.

C. Small Business Regulatory Enforcement Fairness Act (SBREFA)

This rule is not a major rule under 5 U.S.C. 804(2), the Small Business Regulatory Enforcement Fairness Act.

(a) This rule does not have an annual effect on the economy of $100 million or more. The annual value of contracts is less than $45 million.

(b) This rule will not cause any increase in costs or prices for consumers, individual industries, Federal, State, or local government agencies, or geographic regions. The rule will be applied on a national basis and has no effect on the dollar amount expended for acquisitions.

(c) This rule does not have significant adverse effects on competition,

employment, investment, productivity, innovation, or the ability of U.S.-based enterprises to compete with foreign-based enterprises. The annual value of the acquisitions made under this authority is less than $45 million.

D. Unfunded Mandates Reform Act

This rule does not impose any unfunded mandate on State, local, or tribal governments or the private sector. The rule does not have a significant or unique effect on State, local or tribal governments or the private sector. The rule merely governs acquisitions from contractors.

E. Takings Implications (Executive Order 12630)

In accordance with Executive Order 12630, the rule does not have any takings implications. The rule governs acquisitions from contractors.

F. Federalism (Executive Order 13132)

In accordance with Executive Order 13132, the rule does not have any Federalism implications to warrant the preparation of a Federalism Assessment. The rule governs acquisitions from contractors and does not interfere with the administration of programs by State Governments.

G. Civil Justice Reform (Executive Order 12988)

In accordance with Executive Order 12988, the Office of the Solicitor has determined that this rule does not unduly burden the judicial system and meets the requirements of sections 3(a) and 3(b)(2) of the Order.

H. Consultation With Indian Tribes (Executive Order 13175)

The BIA has held public meetings with the tribes as stated in the Background section of this preamble as well as the several previous publications of the proposed rule. This meets the intent of the Executive Order. The rule will more directly affect any contractors who may decide to use the Buy Indian Act for subcontracting and Indian economic enterprises.

I. Paperwork Reduction Act of 1995

This regulation requires offerors to state whether they meet the definition of an ''Indian economic enterprise.'' This statement is a simple representation that an offeror submits to support its claim for eligibility to participate in contract awards under the authority of the Buy Indian Act 25 U.S.C. 47, as amended. Because this statement is a simple certification or acknowledgment, it does not qualify as a collection of information under the Paperwork Reduction Act. See 5 CFR 1320.3(h).

J. National Environmental Policy Act

This rule does not constitute a major Federal action significantly affecting the quality of the human environment. A detailed statement under the National Environmental Policy Act of 1969 is not required because there is nothing inherent in the rule that will significantly affect the quality of the human environment; the rule merely regulates the implementation of an acquisition authority.

K. Effects on the Energy Supply (Executive Order 13211)

This rule is not a significant energy action under the definition in Executive Order 13211. A statement of energy effects is not required.

L. Clarity of This Regulation

We are required by Executive Orders 12866 (section 1 (b)(12)) and 12988 (section 3(b)(1)(B)) and by the Presidential Memorandum of June 1, 1998, to write all rules in plain language. This means that each rule we publish must:

(a) Be logically organized;

(b) Use the active voice to address readers directly;

(c) Use common, everyday words and clear language rather than jargon;

(d) Be divided into short sections and sentences; and

(e) Use lists and tables wherever possible.

If you feel that we have not met these requirements, send us comments by one of the methods listed in the **ADDRESSES** section. To better help us revise the rule, your comments should be as specific as possible. For example, you should tell us the numbers of the sections or paragraphs that you find unclear, which sections or sentences are too long, the sections where you feel lists or tables would be useful, etc.

M. Public Availability of Comments

Before including your address, phone number, email address, or other personal identifying information in your comment, you should be aware that your entire comment—including your personal identifying information—may be made publicly available at any time. While you can ask us in your comment to withhold your personal identifying information from public review, we cannot guarantee that we will be able to do so.

List of Subjects in 48 CFR Chapter 14

Government procurement, Indian Economic Enterprises, Reporting and recordkeeping requirements.

Dated: July 20, 2012.

Amy Holley,

Chief of Staff, Policy, Management and Budget.

For the reasons set out in the preamble, the Department of the Interior proposes to amend chapter 14 of title 48 of the Code of Federal Regulations as follows:

PART 1401—DEPARTMENT OF THE INTERIOR ACQUISITION REGULATION SYSTEM

1. The authority for part 1401 continues to read as follows:

Authority: Sec. 205(c), 63 Stat. 390, 40 U.S.C. 486(c); and 5 U.S.C. 301.

2. Add section 1401.301–80 to read as follows:

1401.301–80 Policy.

BIA must use the negotiation authority of the Buy Indian Act, 25 U.S.C. 47 to give preference to Indians whenever using that authority is authorized and feasible. The Buy Indian Act requires that, so far as may be feasible, Indian labor must be employed, and purchases of the products of Indian industry may be made in open market at the discretion of the Secretary of the Interior. This requirement applies notwithstanding any other law and applies to all products of an industry, including printing.

PART 1452—SOLICITATION PROVISIONS AND CONTRACT CLAUSES

3. The authority for part 1452 continues to read as follows:

Authority: Sec. 205(c), 63 Stat. 390, 40 U.S.C. 486(c); and 5 U.S.C. 301.

4. In subpart 1452.2, add the following sections to read as follows:

Subpart 1452.2—Texts of Provisions and Clauses

* * * * *

1452.280–1 Notice of Indian small business economic enterprise set-aside.
1452.280–2 Notice of Indian economic enterprise set-aside.
1452.280–3 Subcontracting limitations.
1452.280–4 Indian economic enterprise representation.

Subpart 1452.2—Texts of Provisions and Clauses

* * * * *

1452.280–1 Notice of Indian small business economic enterprise set-aside.

As prescribed in 1480.503(b)(1), and in lieu of the requirements of FAR 19.508, insert the following provision in each written solicitation of offers to

provide supplies or services when purchasing commercial items under FAR Part 12 or using simplified acquisition procedures under FAR Part 13. If the solicitation is oral, information substantially identical to that contained in the provision must be given to potential offerors.

Notice of Indian Small Business Economic Enterprise Set-Aside (Current Date)

Under the Buy Indian Act, 25 U.S.C. 47, offers submitted in response to this solicitation are solicited only from Indian economic enterprises (Subpart 1480.8) that also must be small business concerns. The offeror must represent that they meet the definition of Indian economic enterprise at the time of submission of its offer to a specific solicitation as evidence that it is eligible to be considered for award. Any acquisition resulting from this solicitation will be from such a concern. Offers received from enterprises that are not Indian economic enterprises will not be considered and will be rejected.

(End of provision)

1452.280–2 Notice of Indian economic enterprise set-aside.

As prescribed in 1480.504–1(b)(2), insert the following clause in solicitations and contracts involving Indian economic enterprise set-asides:

Notice of Indian Economic Enterprise Set-Aside (Current Date)

(a) Definitions as used in this clause.

Indian means a person who is a member of an Indian Tribe or ''Native'' as defined in the Alaska Native Claims Settlement Act (PL 92–203; 85 Stat. 688; 43 USC 1601).

Indian Economic Enterprise means any business activity owned by an Indian or an Indian Tribe that is established for the purpose of profit, provided that: (i) Such Indian or Indian Tribe ownership shall constitute not less than 51 percent of the enterprise; (ii) the Indian or Indian Tribe shall receive a majority of the earnings from the contract; and (iii) the management and daily business operations of an Indian economic enterprise must be controlled by one or more individuals who are members of an Indian Tribe. To ensure actual control over the enterprise, the individuals must possess requisite management or technical capabilities directly related to the primary industry in which the enterprise conducts business. The enterprise must meet these requirements throughout the following time periods:

(1) At the time an offer is made in response to a written solicitation;

(2) At the time of contract award; and,

(3) During the full term of the contract.

Indian Tribe means an Indian Tribe, band, nation, or other recognized group or community which is recognized as eligible for the special programs and services provided by the United States to Indians because of their status as Indians, including any Alaska Native village, regional or village corporation established under the Alaska Native Claims Settlement Act (Pub. L. 92–203, 85 Stat. 688; 43 U.S.C. 1601).

Representation means the positive statement by an enterprise of its eligibility for preferential consideration and participation for acquisitions conducted under the Buy Indian Act, 25 U.S.C. 47, in accordance with the procedures in Subpart 1480.8.

(b) General.

(1) Under the Buy Indian Act, offers are solicited only from Indian economic enterprises.

(2) BIA will reject all offers received from ineligible enterprises.

(3) Any award resulting from this solicitation will be made to an Indian economic enterprise, as defined in paragraph (a).

(c) Required Submissions. In response to this solicitation, an offeror must also provide the following:

(1) A description of the required percentage of the work/costs to be provided by the offeror over the contract term as required by section 1452.280–3, Subcontracting Limitations clause;

(2) A description of the source of human resources for the work to be performed by the offeror;

(3) A description of the method(s) of recruiting and training Indian employees, indicating the extent of soliciting employment of Indian persons, as required by DIAR 1452.226–70, Indian Preference, or DIAR 1452.226–71, Indian Preference Program, clause(s);

(4) A description of how subcontractors (if any) will be selected in compliance with the ''Indian Preference'' or ''Indian Preference'' clause(s);

(5) The names, addresses, and descriptions of work to be performed by Indian persons or economic enterprises being considered for subcontracts (if any) and the percentage of the total direct project work/costs they would be performing;

(6) Qualifications of the key personnel (if any) that will be assigned to the contract;

(7) A description of method(s) for compliance with any supplemental Tribal employment preference requirements, if contained in this solicitation; and

(d) Required Assurance. The contractor must provide written assurance to the Bureau that it will comply, or has, complied fully with the requirements of this clause. It must do this before the Bureau awards the Buy Indian contract, as well as, upon successful and timely completion of the contract, but before the Bureau Contracting Officer (CO) accepts the work or product.

(e) Non-responsiveness. Failure to provide the information required by paragraphs (c) and (d) of this clause may cause the Bureau to find an offer non-responsive and to reject it.

(f) Eligibility.

(1) Participation in the Mentor-Protégé Program established under section 831 of the National Defense Authorization Act for Fiscal Year 1991 (25 U.S.C. 47 note) does not render an Indian economic enterprise ineligible for contracts awarded under the Buy Indian Act.

(2) If a contractor no longer meets the definition of an Indian economic enterprise after award, the contractor must notify the CO in writing. The notification must include full disclosure of circumstances causing the contractor to lose eligibility status and a description of any actions that the contractor will take to regain eligibility. Failure to give the CO immediate written notification means that: (1) The economic enterprise may be declared ineligible for future contract awards under this part; and (2) The Bureau may consider termination for default if it is in the best interest of the government.

(End of clause)

1452.280–3 Subcontracting limitations.

A contractor shall not subcontract to other than responsible Indian economic enterprises more than 50 percent of the work under a prime contract awarded under the Buy Indian Act. For this purpose, work to be performed does not include the provision of materials, supplies, or equipment.

As prescribed in 1480.602(b), insert the following clause in each written solicitation or contracts to provide supplies, services, or on-reservation construction:

Subcontracting Limitations (Current Date)

(a) Definitions as used in this clause.

(1) *Concern* means any business entity organized for profit (even if its ownership is in the hands of a nonprofit entity) with a place of business located in the United States or its outlying areas and that makes a significant contribution to the U.S. economy through payment of taxes and/or use of American products, material and/or labor, etc. ''Concern'' includes but is not limited to an individual, partnership, corporation, joint venture, association, or cooperative. For the purpose of making affiliation findings (see 19.101) any business entity, whether organized for profit or not, and any foreign business entity, *i.e.,* any entity located outside the United States and its outlying areas.

(2) *Subcontract* means any agreement (other than one involving an employer-employee relationship) entered into by a Government prime contractor or subcontractor calling for supplies and/or services required for performance of the contract, contract modification, or subcontract.

(3) *Subcontractor* means a concern to which a contractor subcontracts any work under the contract. The term includes subcontractors at any tier who perform work on the contract.

(b) Required Percentages of work by the concern. The contractor must comply with FAR 52.219–14 Limitations on Subcontracting clause.

(c) Indian Preference. Regardless of the contract type for services, supplies, or on-reservation construction, the contractor agrees to give preference to Indian organizations and Indian owned economic enterprises in awarding subcontracts under this contract in accordance with DIAR 1452.226–71, Indian Preference.

(d) Cooperation. The contractor must:

(1) Carry out the requirements of this clause to the fullest extent; and

(2) Cooperate in any study or survey that the CO, the Bureau of Indian Affairs, or its agents may conduct to verify the contractor's compliance with this clause.

(e) Incorporation in Subcontracts. The contractor must incorporate the substance of this clause, including this paragraph (e), in all subcontracts for supplies, services, and construction awarded under this contract.

(End of clause)

1452.280–4 Indian Economic Enterprise Representation.

As prescribed in 1480.801(a), insert the following provision in each written solicitation for supplies, services, or on-reservation construction:

Indian Economic Enterprise Representation (Current Date)

The offeror represents as part of its offer that it [ ] does [ ] does not meet the definition of Indian economic enterprise as defined in 1480.201.

[End of provision]

5. Add subchapter H, consiting of part 1480, to read as follows:

SUBCHAPTER H—BUREAU OF INDIAN AFFAIRS SUPPLEMENT

PART 1480—ACQUISITIONS UNDER THE BUY INDIAN ACT

Subpart 1480.1—General

Sec.

1480.101 Scope of part.
1480.102 Buy Indian Act acquisition regulations.
1480.103 Information collection.

Subpart 1480.2—Definitions

1480.201 Definitions as used in this part.

Subpart 1480.3—Applicability

1480.301 Scope of part.
1480.302 Restrictions on use of the Buy Indian Act.

Subpart 1480.4—Policy

1480.401 Requirement to give preference to Indian Economic Enterprises.
1480.402 Delegations and responsibility.
1480.403 Deviations.

Subpart 1480.5—Procedures

1480.501 General.
1480.502 Order of precedence for use of Government supply sources.
1480.503 Commercial item or simplified acquisitions.
1480.504 Other than full and open competition.
1480.504–1 Set-asides for Indian Economic Enterprises.
1480.504–2 Other circumstances for use of other than full and open competition.
1480.505 Debarment and suspension.

Subpart 1480.6—Contract Requirements

1480.601 Subcontracting limitations.
1480.602 Performance and payment bonds.

Subpart 1480.7—Contract Administration

1480.701 Contract administration requirements.

Subpart 1480.8—Representation by an Indian Economic Enterprise Offeror

1480.801 General.
1480.802 Representation provision.
1480.803 Declaration process.

Subpart 1480.9—Protests of Representation

1480.901 General.
1480.902 Receipt of protest.
1480.903 Award in the face of protest.
1480.904 Protest not timely.

Authority: 25 U.S.C. 47, as amended (36 Stat. 861), 41 U.S.C. 253(c)(5), and 5 U.S.C. 301.

PART 1480—ACQUISITIONS UNDER THE BUY INDIAN ACT

Subpart 1480.1—General

§ 1480.101 Scope of part.

This part prescribes policies and procedures for the procurement of supplies and services from Indian economic enterprises under the Buy Indian Act, 25 U.S.C. 47, and this part.

§ 1480.102 Buy Indian Act acquisition regulations.

(a) This part supplements Federal Acquisition Regulation (FAR) and Department of the Interior Regulation (DIAR) requirements to satisfy the needs of the Bureau of Indian Affairs in implementing the Buy Indian Act.

(b) Regulations issued under this part will be codified in Department of the Interior (DOI) regulations at 48 CFR Chapter 14, Appendix A, Part 1480.

(c) This part is under the direct oversight and control of the Chief Financial Officer, BIA, Department of the Interior (hereinafter, ''CFO''). The CFO is responsible for issuing and implementing this part.

(d) Acquisitions conducted under this part are subject to all applicable requirements of the FAR and DIAR, as well as internal policies, procedures or instructions issued by the Bureau of Indian Affairs. The provisions of the FAR takes precedence in all instances where there may be a conflict or discrepancy.

Subpart 1480.2—Definitions

§ 11480.201 Definitions as used in this part.

The following words and terms are used as defined below unless a different definition is prescribed for a particular subpart or portion of a subpart.

Bureau means the Bureau of Indian Affairs

Bureau central office means the Headquarters component located in Reston, Virginia that serves as staff resource to the Assistant Secretary-Indian Affairs. For purposes of this part, the term refers specifically to the Office of Management and Administration, Division of Acquisition and Property Management.

Buy Indian Act means section 23 of the Act of June 25, 1910 (25 U.S.C. 47 (hereinafter ''the Act'').

Buy Indian contract means any contract involving activities covered by the Buy Indian Act that is negotiated under the provisions of 41 U.S.C. 252(c) and 25 U.S.C. 47 between an Indian economic enterprise and a Contracting Officer representing the Department of the Interior.

Chief of the Contracting Office (CCO), unless otherwise specified by bureau/office regulation, means the senior GS–1102 within a contracting office. If the CCO is also the CO for an action requiring approval by the CCO, then approval shall be at a level above the CCO in accordance with bureau procedures.

Concern means any business entity organized for profit (even if its ownership is in the hands of a nonprofit entity) with a place of business located in the United States or its outlying areas and that makes a significant contribution to the U.S. economy through payment of taxes and/or use of American products, material and/or labor, etc. ''Concern'' includes but is not limited to an individual, partnership, corporation, joint venture, association, or cooperative. For the purpose of making affiliation findings (see FAR 19.101), ''concern'' includes any business entity, whether organized for profit or not, and any foreign business entity, *i.e.,* any entity located outside the United States and its outlying areas.

Contracting Officer (CO) means a person with the authority to enter into, administer, and/or terminate contracts and make related determinations and findings on behalf of the U.S. government.

Day means, unless otherwise specified, a calendar day.

Deviation means an exception to the requirement for use of the Buy Indian Act in fulfilling an acquisition requirement of the Bureau.

Fair market price means a price based on reasonable costs under normal competitive conditions and not on lowest possible cost, as determined in accordance with FAR 19.202–6(a).

Governing body means the recognized entity empowered to exercise governmental authority over an Indian tribe.

Indian means a person who is a member of an Indian Tribe or ''Native''

as defined in the Alaska Native Claims Settlement Act (Pub. L. 92–203; 85 Stat 688; 43 U.S.C. 1601).

Indian Economic Enterprise (IEE) means:

(1) Any business activity owned by an Indian or an Indian Tribe that is established for the purpose of profit provided that:

(i) Such Indian or Indian Tribe ownership shall constitute not less than 51 percent of the enterprise;

(ii) That the Indian or Indian Tribe shall receive a majority of the earnings from the contract; and

(iii) The management and daily business operations of an enterprise must be controlled by one or more individuals who are Indians.

(2) To ensure actual control over the enterprise, the individuals must possess requisite management or technical capabilities directly related to the primary industry in which the enterprise conducts business. The enterprise must meet these requirements for these time periods:

(i) At the time an offer is made in response to a written solicitation;

(ii) At the time of contract award; and

(iii) During the full term of the contract.

Indian land means land over which an Indian Tribe is recognized by the United States as having governmental jurisdiction and land owned by a Native corporation established under the Alaska Native Claims Settlement Act of 1971 (85 Stat. 688, 43 U.S.C. 1601), so long as the Native corporation qualifies as an IEE, as defined herein. In the State of Oklahoma, or where there has been a final judicial determination that a reservation has been disestablished or diminished, the term means that area of land constituting the former reservation of the Tribe as defined by the Secretary.

Indian small business economic enterprise (ISBEE) means an IEE that is also a small business concern established in accordance with the criteria and size standards of 13 CFR part 121.

Indian Tribe means an Indian Tribe, band, nation, or other recognized group or community which is recognized as eligible for the special programs and services provided by the United States to Indians because of their status as Indians, including any Alaska Native village or regional or village corporation under the Alaska Native Claims Settlement Act (Pub. L. 92–203, 85 Stat. 688; 43 U.S.C. 1601).

Interested party means an IEE that is an actual or prospective offeror whose direct economic interest would be affected by the proposed or actual Bureau award of a particular contract set-aside pursuant the Act.

Mentor-Protégé Program

Product of Indian industry means anything produced by an IEE either through physical labor or by intellectual effort involving the use and application of their skills.

Protest of representation means an accurate, complete and timely written objection by an interested party to an offeror's representation declaration status for a submitted in response to a solicitation under the Act.

Representation means the positive statement by an enterprise of its eligibility for preferential consideration and participation for acquisitions conducted under the Buy Indian Act, 25 U.S.C. 47, in accordance with the procedures in Subpart 1480.8.

Reservation means Indian reservations, public domain Indian allotments, former Indian reservations in Oklahoma, and land held by incorporated Native groups, regional corporations, and village corporations under the provisions of the Alaska Native Claims Settlement Act, 43 U.S.C. 1601.

Subcontract means any agreement (other than one involving an employer-employee relationship) entered into by a Government prime contractor or subcontractor calling for supplies and/or services required for performance of the contract, contract modification, or subcontract.

Subcontractor means a concern to which a contractor subcontracts any work under the contract. The term includes subcontractors at any tier who perform work on the contract.

Work means the level of work effort by the prime contractor based on total direct project costs.

Subpart 1480.3—Applicability

§ 1480.301 Scope of part.

Except as provided in 1480.401(b), this part applies to all acquisitions, including simplified acquisitions, made by the BIA and by any other bureau or office of the Department of the Interior delegated the authority to make acquisitions under the Buy Indian Act and 1480.401(d).

§ 1480.302 Restrictions on use of the Buy Indian Act.

(a) The Bureau must not use the authority of the Buy Indian Act and the procedures contained in this part to award intergovernmental contracts to tribal organizations to plan, operate or administer authorized Bureau programs (or parts thereof) that are within the scope and intent of the Indian Self-Determination and Education Assistance Act. The Bureau must use the Buy Indian Act solely to award procurement contracts to IEEs.

(b) The Bureau must not use the authority of this Act for off-reservation construction contracts, as defined in FAR 36.102 (48 CFR 36.02).

Subpart 1480.4—Policy

§ 1480.401 Requirement to give preference to Indian Economic Enterprises.

(a) The Bureau shall utilize the negotiation authority of the Buy Indian Act, 25 U.S.C. 47, to give preference to Indians whenever the use of that authority is authorized and practicable. The Buy Indian Act provides that, so far as may be practicable, Indian labor shall be employed, and purchases of the products (including, but not limited to printing, notwithstanding any other law) of Indian industry may be made in open market at the discretion of the Secretary of the Interior. Thus, the Bureau may use the Buy Indian Act to give preference to IEEs through set-asides when acquiring supplies, services, and on-reservation construction to meet Bureau needs and requirements. The Bureau must contract for on-reservation construction in accordance with FAR Part 36 (48 CFR part 36).

(b) The Bureau or any other bureau or office of the Department of the Interior delegated the authority to make acquisitions under the Buy Indian Act may not use the Buy Indian Act to give preference to IEEs through set-asides when acquiring construction services for off-reservation construction activities.

(c) The provisions of this section shall not apply to the awarding of contracts under the Indian Self-Determination and Education Assistance Act (25 U.S.C. 450b *et seq.*) by DOI.

§ 1480.402 Delegations and responsibility.

(a) The Secretary has delegated authority under the Buy Indian Act to the Assistant Secretary—Indian Affairs. The Bureau exercises this authority in support of its mission and program activities and as a means of fostering Indian employment and economic development.

(b) The Secretary may delegate authority under the Buy Indian Act to a bureau or office within the Department of the Interior other than the Bureau of Indian Affairs only by a Secretarial Order issued in accordance with Part 012, Chapter 1 of the Departmental Manual (012 DM 1).

(c) The CFO as the head of the contracting activity, is responsible for

ensuring that all Indian Affairs acquisitions under the Buy Indian Act comply with the requirements of this part.

1480.403 Deviations.

(a) The following officials may authorize a deviation for an Indian Affairs acquisition:

For a proposed contract action . . .	The following official may authorize a deviation . . .
Exceeding $25,000 but not exceeding $550,000	The CCO (or the Bureau Procurement Chief, absent a CCO).
Exceeding $550,000 but not exceeding $11.5 million	Bureau Competition Advocate.
Exceeding $11.5 million but not exceeding $57 million	The head of the procuring activity, or a designee who is a civilian serving in a position in a grade above GS–15 under the General Schedule or in a comparable or higher position under another schedule.
Exceeding $57 million	Senior procurement executive.

(b) Deviations may be authorized prior to issuing the solicitation when the Bureau makes the following determinations and the appropriate official takes the following actions:

Acquisition type	Basis for deviation	Necessary actions
In pursuit of a simplified or commercial item acquisition in accordance with FAR Parts 12 or 13 and DIAR 1413.	The Bureau determines after a market survey that there is no reasonable expectation of obtaining offers that will be competitive in terms of market price, quality, and delivery from two or more responsible ISBEEs (or at least from one such enterprise, if the purchase does not exceed the dollar threshold described in FAR 13.003).	The CO must: (1) Document the reasons for the deviation in the file; (2) Ascertain the availability of small business suppliers through market research; and (3) If appropriate, compete the purchase using an unrestricted small business set-aside as prescribed in FAR 19.502–2.
In pursuit of all other acquisitions	The Bureau determines there is no reasonable expectation that offers will be received from two or more responsible IEEs at a reasonable and fair market price.	The official must: (1) Provide a written determination in the contract file stating there is no reasonable expectation of receiving offers from two or more responsible IEEs and that award cannot be made at a reasonable and fair market price; and (2) Proceed with the acquisition using the order of precedence established in FAR 8.001.

(c) Deviations may be authorized after issuing solicitations when the Bureau makes the following determinations and the appropriate official takes the following actions:

Acquisition type	Basis for deviation	Necessary actions
In pursuit of a simplified or commercial item acquisition in accordance with FAR Parts 12 or 13 and DIAR 1413.	Only one offer is received from a responsible ISBEE and the price is unreasonable or no offers are received from a responsible ISBEE.	The CO must: (1) Document the reasons for the deviation in the file; (2) Ascertain the availability of small business suppliers through market research; and (3) If appropriate, compete the purchase using an unrestricted small business set-aside as prescribed in FAR 19.502–2.
In pursuit of all other acquisitions	The Indian tribe justifies a deviation under 1480.504–1(b)(3). (1) All otherwise acceptable offers received from IEEs are unreasonable; (2) Only one offer is received from an IEE and the CO determines the price to be unreasonable; or (3) No responsive offers have been received from IEEs.	The Bureau must proceed under PL 93–638. The official must: (1) Cancel the solicitation; (2) Reject all offers in writing in accordance with FAR 14.404–3; and (3) Complete the acquisition by either: (i) Using negotiation, provided the CO has obtained the approval required by FAR 14.404–1; or (ii) If negotiation with the offerors responding to the canceled solicitation is not authorized, the CO must proceed with a new acquisition using the order of precedence in FAR 8.001.

(d) In response to a set-aside acquisition, when using competitive proposals, proposals may be rejected by a written determination by the CCO that a reasonable price cannot be negotiated.

Subpart 1480.5—Procedures

1480.501 General.

All acquisitions made in accordance with this part, including simplified or commercial item acquisitions, must conform to all applicable requirements of the FAR and DIAR.

1480.502 Order of precedence for use of Government supply sources.

Acquisitions made under an authorized deviation from the Buy Indian Act regulation must be made in conformance with the order of precedence required by FAR 8.002 (48 CFR 8.002).

1480.503 Commercial item or simplified acquisitions.

(a) Each acquisition of supplies, services, and on-reservation construction that is subject to commercial item or simplified acquisition procedures in accordance with FAR Part 12 or 13 (48 CFR part 12 or 13) and DIAR 1413 must be set aside exclusively for ISBEEs. The Bureau will use ISBEE commercial item(s) or simplified acquisition set-asides to accomplish this preference action.

(b) Each written solicitation of offers under an ISBEE commercial item or simplified acquisition set-aside must contain the provision at section 1452.280–1, NOTICE OF INDIAN SMALL BUSINESS ECONOMIC ENTERPRISE SET-ASIDE. If the solicitation is oral, information substantially identical to that contained in the provision must be given to potential offerors.

(c) If the CO proceeds with an ISBEE commercial item or simplified acquisition set-aside and receives an offer at a reasonable price from only one such responsible economic enterprise (see FAR 19.502–2 (48 CFR 19.502–2)), the CO must make an award to that enterprise.

(d) Commercial item or simplified acquisitions under this section must conform to the competition and price reasonableness documentation requirements of FAR 12.209 (48 CFR 12.209) for commercial item acquisitions and FAR 13.106 (48 CFR 13.106) for simplified acquisitions.

(e) Clauses and Provisions.

(1) Insert the provision at 1452.280–4, INDIAN ECONOMIC ENTERPRISE REPRESENTATION, in each solicitation of offers or requests for quotations that is set aside for IEEs.

(2) Insert the clause at 1452.280–3, SUBCONTRACTING LIMITATIONS, in purchase orders and contracts for services, supplies, or on-reservation construction and awarded to IEEs.

(3) Insert the clause at DIAR 1452.226–71, Indian Preference Program, in accordance with DIAR 1426.7003(b).

1480.504 Other than full and open competition.

1480.504–1 Set-asides for Indian Economic Enterprises.

(a) Each proposed procurement for supplies or services that has an anticipated dollar value in excess of the simplified acquisition threshold amount in FAR Part 13.003 (48 CFR 13.003) must be set aside exclusively for IEEs, and referred to as an ''Indian Economic Enterprise Set-aside,'' when there is a reasonable expectation that offers will be received from two or more responsible, IEEs and award will be made at a reasonable price except when:

(1) The acquisition is for off-reservation construction, as described in 1480.401(b);

(2) A deviation has been obtained in accordance with 1480.402; or

(3) Use of other than full and open competition has been justified and approved in accordance with 1480.504–2.

(b) When acquiring services to be performed in whole or in part on Indian land, the CO must give written notice to the governing body or bodies of the applicable Indian tribe simultaneously with publication of the synopsis required by paragraph (c)(1) of this section. The notice must state the Bureau's intent to solicit services or supplies using an IEE set-aside and provide the tribe with the opportunity to contract for the program within 15 calendar days from the date of the synopsis publication in the GPE.

(1) If the tribe does not oppose the set-aside intention or advise the Bureau by the established deadline of its intent to contract, the Bureau will proceed with the solicitation in accordance with FAR 5.2 (48 CFR 5.2).

(2) If the tribe advises the Bureau by the established deadline of its intent to contract, it must adequately justify a deviation for work on or near its own Indian land through a tribal resolution in accordance with Public Law 93–638.

(c) When using an IEE set-aside in accordance with this section, the CO must do the following:

(1) Synopsize the acquisition in the Governmentwide point of entry (GPE) as required by FAR Subpart 5.2 (48 CFR subpart 5.2), and identify it as an IEE set-aside.

(2) Use the Class Justification for Use of Other Than Full and Open Competition (JOFOC) in Acquisition of Supplies and Services from Indian Industry to meet the requirements of FAR 6.303 (48 CFR 6.303).

(3) By separate memorandum to the file, document that the supplies or services to be acquired are available from two or more responsible and IEEs; the anticipated cost to the Bureau of the required supplies or services is determined to be reasonable; and the information in the ''Class Justification for Use of Other Than Full and Open Competition in Acquisition of Supplies and Services from Indian Industry'' is accurate and complete as it pertains to the proposed acquisition.

(4) Reject offers that fail to provide representation that they meet the definition of an IEE. The CO may also request the Office of the Inspector General (on Form DI–1902 as part of a normal pre-award audit) to:

(i) Assist in determining the eligibility of the low responsive and responsible offerors on Buy Indian Act awards, and

(ii) Determine whether the work will be performed by the labor force required under 1480.602.

(5) When using sealed bidding, determine that the price offered by the prospective contractor is considered to be reasonable and at a fair market price as required by FAR 14.408–2 (48 CFR 14.408–2) before awarding a contract.

(6) When using competitive proposals, solicit proposals in accordance with FAR Subpart 15.2 (48 CFR subpart 15.2) and select sources in accordance with FAR Subpart 15.3 (48 CFR subpart 15.3) and DIAR Subpart 1415.6.

(7) When using competitive proposals or when negotiating modifications that impact the cost of a contract, conduct proposal analyses, including cost or price analyses in accordance with FAR Subpart 15.4 (48 CFR subpart 15.4), negotiate profit or fee in accordance with the procedures in FAR Subpart 15.4 and DIAR Subpart 1415.9, and prepare a negotiation memorandum in accordance with FAR 15.406–3 (48 CFR 15.406–3) and DIAR 1415.808.

(8) When acquiring architect-engineer services, solicit proposals and evaluate potential contractors in accordance with FAR Part 36 (48 CFR part 36) and DIAR Subpart 1436.6.

(d) This paragraph applies to solicitations that are not restricted to participation of IEEs.

(1) If an interested IEE is identified after a market survey has been performed and a solicitation has been issued, but before the date established for receipt of offers, the contracting

office must provide a copy of the solicitation to this enterprise. In this case, the CO:

(i) Will not give preference under the Buy Indian Act to the IEE, and

(ii) May extend the date for receipt of offers when practical.

(2) If more than one IEE comes forward subsequent to the solicitation, but prior to the date established for receipt of offers, the CO may cancel the solicitation and re-compete it as an IEE set-aside.

(e) When only one offer is received from a responsible IEE at a reasonable and fair market price in response to an acquisition set-aside under paragraph (a) of this subsection, the CO must:

(1) Make an award to that enterprise;

(2) Document the reason only one offer was considered; and

(3) Initiate action to increase competition in future solicitations.

(f) Provisions and Clauses.

(1) Insert the provision at 1452.280–4, INDIAN ECONOMIC ENTERPRISE REPRESENTATION, in accordance with 1480.801(a).

(2) Insert the clause at DIAR 1452.226–70, Indian Preference, in accordance with DIAR 1426.7003(a);

(3) Insert the clause at DIAR 1452.226–71, Indian Preference Program, in accordance with DIAR 1426.7003(b);

(4) Insert the clause at 1452.280–2, NOTICE OF INDIAN ECONOMIC ENTERPRISE SET-ASIDE, in accordance with 1480.504–1(b)(2).

(5) Insert the clause at 1452.280–3, SUBCONTRACTING LIMITATIONS, as prescribed in 1480.601(b);

(6) When applicable, Tribal employment preference requirements may be added to the requirements of the clause in accordance with DIAR 1426.7005.

1480.504–2 Other circumstances for use of other than full and open competition.

(a) Other circumstances may exist where the use of an IEE set-aside in accordance with 1480.401(a) and FAR 6.302–5 (48 CFR 6.302–5) is not feasible. In such situations, the requirements of FAR Subpart 6.3 (48 CFR subpart 6.3) and DIAR Subpart 1406.3 apply in justifying the use of the appropriate authority for other than full and open competition.

(b) Except as provided in FAR 5.202 (48 CFR 5.202), all proposed acquisition actions must first be publicized in accordance with the requirements of FAR 5.2 (48 CFR 5.2) and DIAR 1405.2.

(c) Justifications for use of other than full and open competition in accordance with this section must be approved in accordance with 14–6. These approvals are required for a proposed contract, or for an out of scope modification to an existing contract.

1480.505 Debarment and suspension.

Violation of the regulations in this part by an offeror or an awardee may be cause for debarment or suspension in accordance with FAR 9.406 and 9.407 (48 CFR 9.406 and 9.407). The Bureau must refer recommendations for debarment or suspension to the Director, Office of Acquisition and Property Management (PAM), Department of the Interior, in accordance with DIAR 1409.406 and 1409.407 through the Division of Acquisition and Property Management (central office) and concurred by the HCA.

Subpart 1480.6—Contract Requirements

1480.601 Subcontracting limitations.

(a) In contracts awarded under the Buy Indian Act and this part, the contractor must agree to perform the contract in accordance with FAR 52.219–14 (48 CFR 52.219–14), Limitations on Subcontracting.

(b) The CO must also insert the clause at 1452.280–3, SUBCONTRACTING LIMITATIONS, in all purchase orders and contracts for services, supplies, or on-reservation construction and awarded to IEEs pursuant to this part.

1480.602 Performance and payment bonds.

Solicitations requiring performance and payment bonds must conform to FAR Part 28 (48 CFR part 28) and authorize use of any of the types of security acceptable in accordance with FAR Subpart 28.2 (48 CFR subpart 28.2) or section 11 of Public Law 98–449, the Indian Financing Act Amendment of 1984. The CO may accept alternative forms of security in lieu of performance and payment bonds according to FAR 28.102 (48 CFR 28.102) and 25 U.S.C. 47a, if a determination is made that such forms of security provide the Government with adequate security for performance and payment.

Subpart 1480.7—Contract Administration

1480.701 Contract administration requirements.

The CO and the CO's representative (see DIAR 1401.670) must monitor performance and progress to ensure contractor compliance with Part 42 of the FAR (48 CFR part 42) regarding all contract requirements. The CO must ensure contractor compliance with the following provisions of this part:

(a) Qualification as an IEE as defined in 1480.201;

(b) Maintenance of the subcontracting limitations required by the clause at 1452.280–3 when acquiring services, supplies, and on-reservation construction; and

(c) Enforcement of Indian preference requirements contained in DIAR 1426.7004, as prescribed by 1480.601.

Subpart 1480.8—Representations by an Indian Economic Enterprise Offeror

1480.801 General.

(a) The CO must insert the provision at 1452.280–4, INDIAN ECONOMIC ENTERPRISE REPRESENTATION, in all solicitations regardless of dollar value that are set aside for IEEs in accordance with this part.

(b) To be considered for an award under 1480.503 or 1480.504–1, an offeror must:

(1) Represent that it meets the definition of ''Indian economic enterprise'' in response to a specific solicitation set-aside in accordance with the Act and this part.

(c) The enterprise must meet the definition of ''Indian economic enterprise'':

(1) At the time an offer is made in response to a solicitation;

(2) At the time of contract award; and,

(3) During the full term of the contract.

(d) If, after award, a contractor no longer meets the eligibility requirements in paragraph (b) of this section, the contractor must provide immediate, written notification to the CO. The notification must include:

(1) Full disclosure of circumstances causing the contractor to lose eligibility status; and

(2) A description of actions, if any, that must be taken to regain eligibility.

(e) Failure to provide immediate written notification required by paragraph (d) of this section means that:

(1) The economic enterprise may be declared ineligible for future contract awards under this part; and

(2) The Bureau may consider termination for default if it is determined to be in the best interest of the government.

(f) The CO will accept an offeror's representation in a specific bid or proposal that it is an IEE unless another interested party challenges the IEE representation or the CO has reason to question the representation. Challenges of and questions concerning a specific representation declaration must be referred to the CO or CCO in accordance with subpart 1480.9.

(g) Participation in the Mentor-Protégé Program established under section 831

of the National Defense Authorization Act for Fiscal Year 1991 (25 U.S.C. 47 note) does not render an IEE ineligible for contracts awarded under the Buy Indian Act.

1480.802 Representation provision.

(a) Bureau contracting offices must provide copies of the IEE representation to any interested parties upon written request.

(b) The submission of a Solicitation Mailing List Application by an enterprise does not remove the requirement for it to provide representation as an IEE also required by this part if it wishes to be considered as an offeror for a specific solicitation. COs may determine the validity of the contents of the applicant's representation.

(c) Any false or misleading information submitted by an enterprise when submitting an offer in consideration for an award set aside under the Buy Indian Act is a violation of the law punishable under 18 U.S.C. 1001. False claims submitted as part of contract performance are subject to the penalties enumerated in 31 U.S.C. 3729 to 3731 and 18 U.S.C. 287.

1480.803 Declaration process.

(a) Only IEEs may participate in acquisitions set aside in accordance with the Act and this part. Bureau procedure supports responsible IEEs and seeks to prevent circumvention or abuse of the Buy Indian Act.

(b) Eligibility is based on information furnished by the enterprise to a Bureau CO on the IEE representation provision at 1452.280–4 in response to a specific solicitation under the Buy Indian Act.

(c) The CO may ask the appropriate Regional Solicitor to review the enterprise's representation.

(d) The IEE representation does not relieve the CO of the obligation for determining contractor responsibility, as required by FAR Subpart 9.1.

Subpart 1480.9—Protests of Representation Declaration

1480.901 General.

(a) The CO can accept an offeror's written representation declaration of being an IEE (as defined in 1480.201) only when it is submitted with an offer in response to a solicitation under the Buy Indian Act. Another interested party may challenge the representation declaration status of an offeror or contractor by filing a written protest to the applicable CO in accordance with the procedures in 1480.902.

(b) After receipt of offers, the CO may question the eligibility declaration of any offeror in a specific offer by filing a formal objection with the CCO.

1480.902 Receipt of protest.

(a) An interested party must file any protests against the representation declaration of an offeror with the local CO.

(b) The protest must be in writing and must contain the basis for the protest with accurate, complete, specific and detailed evidence. The evidence must support the allegation that the offeror is either ineligible or fails to meet both the definitions of ''Indian'' and of ''Indian economic enterprise'' established in 1480.201. The CO will dismiss any protest that is deemed frivolous or that does not meet the conditions in this section.

(c) To be considered timely, a protest must be received by the CO not later than 10 days after the basis of protest is known or should have been known, whichever is earlier.

(1) A protest may be made orally if it is confirmed in writing within the 10-day period after the basis of protest is known or should have been known, whichever is earlier.

(2) A protest may be made in writing if it is delivered by hand, telefax, telegram, or letter postmarked within the 10-day period after the basis of protest is known or should have been known, whichever is earlier.

(3) A CO's objection is always considered timely, whether filed before or after award.

(d) Upon receiving a timely protest, the CO must:

(1) Notify the protestor of the date it was received, and that the representation declaration of the enterprise being challenged is under consideration by the Bureau; and

(2) Furnish to the economic enterprise (whose representation declaration is being challenged) a request to provide detailed information on its eligibility by certified mail, return receipt requested.

(e) Within 3 days after receiving a copy of the protest and the Bureau's request for detailed information, the challenged offeror must file with the CO a completed statement answering the allegations in the protest, and furnish evidence to support its position on representation. If the offeror does not submit the required material within the 3 days, or another period of time granted by the CO, the Bureau may assume that the offeror does not intend to challenge the protest and the Bureau must not award to the challenged offeror.

(f) Within 10 days after receiving a protest, the challenged offeror's response and other pertinent information, the CO must determine the representation declaration status of the challenged offeror and notify the protestor and the challenged offeror of the decision by certified mail, return receipt requested, and make known the option to appeal the determination to the PAM.

(g) If the declaration accompanying an offer is challenged and subsequently upheld by the PAM, the written notification of this Bureau action must state the reason(s). The PAM may review the economic enterprise for possible suspension or debarment recommendations.

1480.903 Award in the face of protest.

(a) Award of a contract in the face of protest may be made on the basis of the CO's written determination that the challenged offeror's representation declaration is valid.

(1) This determination is final for the Bureau unless it is appealed to the PAM, and the CO is notified of the appeal before award.

(2) If an award was made before the time the CO received notice of appeal, the contract must be presumed to be valid.

(b) After receiving a protest involving an offeror being considered for award, the CO must not award the contract until the CO has determined the validity of the representation, or 10 days have expired since the CO received the protest, whichever occurs first. Award must be made when the CO determines in writing that an award must be made to protect the public interest, or the supplies and services are urgently required, or a prompt award will otherwise be advantageous to the Government.

(c) If a timely protest on representation declaration is filed with the CO and received before award in response to a specific offer and solicitation, the CO must notify eligible offerors within one day that the award will be withheld and a time extension for acceptance is requested.

(d) If a protest on representation declaration is filed with the CO and received after award in response to a specific offer and solicitation, the CO need not suspend contract performance or terminate the awarded contract unless the CO believes that an award may be invalidated and a delay would prejudice the Government's interest. However, if contract performance is to be suspended, a mutual no cost agreement will be sought.

1480.904 Protest not timely.

If a CO receives an untimely filed protest of a representation declaration,

the CO must notify the protestor that the protest cannot be considered on the instant acquisition but will be considered in any future actions. However, the CO may question at any time, before or after award, the representation declaration status of an IEE.

[FR Doc. 2012–18189 Filed 7–25–12; 8:45 am]

BILLING CODE 4310–02–P

DEPARTMENT OF THE INTERIOR

Fish and Wildlife Service

50 CFR Part 17

[Docket No. FWS–R8–ES–2011–0097; 4500030114]

RIN 1018–AX41

Endangered and Threatened Wildlife and Plants; Designation of Critical Habitat for the Lost River Sucker and Shortnose Sucker

AGENCY: Fish and Wildlife Service, Interior.

ACTION: Proposed rule; reopening of comment period.

SUMMARY: We, the U.S. Fish and Wildlife Service, announce the reopening of the public comment period on the December 7, 2011, proposed designation of critical habitat for the Lost River sucker (*Deltistes luxatus*) and shortnose sucker (*Chasmistes brevirostris*) under the Endangered Species Act of 1973, as amended (Act). We also announce the availability of a draft economic analysis (DEA) of the proposed designation of critical habitat for Lost River sucker and shortnose sucker and an amended required determinations section of the proposal.

DATES: We will consider all comments received or postmarked on or before August 27, 2012. Comments submitted electronically using the Federal eRulemaking Portal (see **ADDRESSES** section, below) must be received by 11:59 p.m. Eastern Time on the closing date.

ADDRESSES: *Document availability:* You may obtain copies of the proposed rule and the draft economic analysis on the Internet at *http://www.regulations.gov* at Docket Number FWS–R8–ES–2011–0097, or by mail from the Klamath Falls Fish and Wildlife Office (see **FOR FURTHER INFORMATION CONTACT**).

Comment submission: You may submit written comments by one of the following methods:

(1) *Electronically:* Go to the Federal eRulemaking Portal: *http://www.regulations.gov.* In the Search box, enter FWS–R8–ES–2010–0097, which is the docket number for this rulemaking. Then, on the left side of the screen, under the Document Type heading, click on the Proposed Rules link to locate this document and submit a comment.

(2) *By hard copy:* Submit by U.S. mail or hand-delivery to: Public Comments Processing, Attn: FWS–R8–ES–2011–0097; Division of Policy and Directives Management; U.S. Fish and Wildlife Service; 4401 N. Fairfax Drive, MS 2042–PDM; Arlington, VA 22203.

We request that you send comments only by the methods described above. We will post all comments on *http://www.regulations.gov.* This generally means that we will post any personal information you provide us (see the Public Comments section below for more information).

FOR FURTHER INFORMATION CONTACT: Laurie R. Sada, Field Supervisor, U.S. Fish and Wildlife Service, Klamath Falls Fish and Wildlife Office, 1936 California Avenue, Klamath Falls, OR 97601, by telephone (541–885–8481), or by facsimile (541–885–7837). Persons who use a telecommunications device for the deaf (TDD) may call the Federal Information Relay Service (FIRS) at 800–877–8339.

SUPPLEMENTARY INFORMATION:

Public Comments

We will accept written comments and information during this reopened comment period on our proposed designation of critical habitat for the Lost River sucker and shortnose sucker that was published in the **Federal Register** on December 7, 2011 (76 FR 76337), our DEA of the proposed designation, and the amended required determinations provided in this document. We will consider information and recommendations from all interested parties. We are particularly interested in comments concerning:

(1) The reasons why we should or should not designate habitat as ''critical habitat'' under section 4 of the Act (16 U.S.C. 1531 *et seq.*), including whether there are threats to the species from human activity, the degree of which can be expected to increase due to the designation, and whether that increase in threat outweighs the benefit of designation such that the designation of critical habitat may not be prudent.

(2) Specific information on:

(a) The amount and distribution of Lost River sucker and shortnose sucker habitat;

(b) What areas that were occupied at the time of listing and contain physical and biological features essential to the conservation of the species should be included in the designation and why;

(c) Special management considerations or protection that may be needed for the physical and biological features essential to the conservation of the species in critical habitat areas we are proposing, including managing for the potential effects of climate change; and

(d) What areas not occupied at the time of listing meet our criteria for being essential for the conservation of the species and, therefore, should be included in the designation and why.

(3) Land use designations and current or planned activities in the subject areas and their possible impacts on proposed critical habitat.

(4) Information on the projected and reasonably likely impacts of climate change on the Lost River sucker and shortnose sucker, the features essential to their conservation, and the areas proposed as critical habitat.

(5) Whether any specific areas we are proposing for critical habitat designation should be considered for exclusion under section 4(b)(2) of the Act, and whether the benefits of potentially excluding any specific area outweigh the benefits of including that area under section 4(b)(2) of the Act.

(6) Any probable economic, national security, environmental, cultural, or other relevant impacts of designating as critical habitat any area that may be included in the final designation. In particular, we seek information on any impacts on small entities, and the benefits of including or excluding areas that exhibit these impacts.

(7) Whether we could improve or modify our approach to designating critical habitat in any way to provide for greater public participation and understanding, or to better accommodate public concerns and comments.

(8) The likelihood of adverse social reactions to the designation of critical habitat, as discussed in the draft economic analysis, and how the consequences of such reactions, if likely to occur, would relate to the conservation and regulatory benefits of the proposed critical habitat designation.

If you submitted comments or information on the proposed rule (76 FR 76337) during the initial comment period from December 7, 2011, to February 6, 2012, please do not resubmit them. We have incorporated them into the public record, and we will fully consider them in the preparation of our final determination. Our final determination concerning revised

critical habitat will take into consideration all written comments and any additional information we receive during both comment periods. On the basis of public comments, we may, during the development of our final determination, find that areas proposed are not essential, are appropriate for exclusion under section 4(b)(2) of the Act, or are not appropriate for exclusion.

You may submit your comments and materials concerning the proposed rule or DEA by one of the methods listed in the **ADDRESSES** section. We request that you send comments only by the methods described in the **ADDRESSES** section.

If you submit a comment via *http://www.regulations.gov,* your entire comment—including any personal identifying information—will be posted on the Web site. We will post all hardcopy comments on *http://www.regulations.gov* as well. If you submit a hardcopy comment that includes personal identifying information, you may request at the top of your document that we withhold this information from public review. However, we cannot guarantee that we will be able to do so.

Comments and materials we receive, as well as supporting documentation we used in preparing the proposed rule and DEA, will be available for public inspection on *http://www.regulations.gov* at Docket No. FWS–R8–ES–2011–0097, or by appointment, during normal business hours, at the U.S. Fish and Wildlife Service, Klamath Falls Fish and Wildlife Office (see **FOR FURTHER INFORMATION CONTACT**). You may obtain copies of the proposed rule and the DEA on the Internet at *http://www.regulations.gov* at Docket Number FWS–R8–ES–2011–0097, or by mail from the Klamath Falls Fish and Wildlife Office (see **FOR FURTHER INFORMATION CONTACT**).

Background

It is our intent to discuss only those topics directly relevant to the designation of critical habitat for the Lost River sucker and shortnose sucker in this document. For more information on the Lost River sucker and shortnose sucker or their habitat, refer to the final listing rule published in the **Federal Register** on July 18, 1988 (53 FR 27130), the 2007 5-year reviews completed for the Lost River sucker and shortnose sucker (Service 2007a and 2007b), and the Draft Revised Lost River Sucker and Shortnose Sucker Recovery Plan (Service 2011). These documents are available on the Klamath Falls Fish and Wildlife Office web site at *http://www.fws.gov/klamathfallsfwo/,* on the Environmental Conservation Online System (*http://ecos.fws.gov/ecos/indexPublic.do*), at *http://www.regulations.gov* (at Docket Number FWS–R8–ES–2011–0097), or from the Klamath Falls Fish and Wildlife Office (see **FOR FURTHER INFORMATION CONTACT**).

Lost River sucker and shortnose sucker are members of the fish family Catostomidae and are endemic to the upper Klamath River basin (National Research Council of the National Academies ((NRC) 2004, pp. 184, 189). Both species predominantly inhabit lake environments but also utilize riverine, marsh, and shoreline habitats for portions of their life history. Lost River sucker are distributed within Upper Klamath Lake and its tributaries (Klamath County, Oregon), Clear Lake Reservoir and its tributaries (Modoc County, California), Tule Lake (Siskiyou and Modoc Counties, California), Lost River (Klamath County, Oregon, and Modoc County, California), Link River (Klamath County, Oregon), and the Klamath River mainstem, including Keno, J.C. Boyle, Copco, and Iron Gate Reservoirs (Klamath County, Oregon, and Siskiyou County, California; Moyle 2002, p. 199; NRC 2004, pp. 190–192). The distribution of shortnose sucker overlaps with that of Lost River sucker, but shortnose sucker also occurs in Gerber Reservoir (Klamath County, Oregon) and upper Willow Creek (Modoc County, California, and Lake County, Oregon), a tributary to Clear Lake Reservoir (Buettner and Scoppettone 1991, p. 18; Moyle 2002, p. 203; NRC 2004, pp. 190–192).

Previous Federal Actions

On December 7, 2011, we published a proposed rule to designate critical habitat for the Lost River sucker and shortnose sucker (76 FR 76337). We proposed to designate approximately 146 miles (mi) (234 kilometers (km)) of streams and 117,848 acres (ac) (47,691 hectares) (ha) of lakes and reservoirs for Lost River sucker and approximately 128 mi (207 km) of streams and 123,590 ac (50,015 ha) of lakes and reservoirs for shortnose sucker in 2 units located in Klamath and Lake Counties, Oregon, and Modoc County, California, as critical habitat. That proposal was a reproposal of a proposed rule we published December 1, 1994 (59 FR 61744), and had a 60-day comment period, ending February 6, 2012. We will submit for publication in the **Federal Register** a final critical habitat designation for the Lost River sucker and shortnose sucker on or before November 30, 2012. For further discussion on previous Federal actions please see the December 7, 2011, revised proposed rule (76 FR 76337).

Critical Habitat

Section 3 of the Act defines critical habitat as the specific areas within the geographical area occupied by a species, at the time it is listed in accordance with the Act, on which are found those physical or biological features essential to the conservation of the species and that may require special management considerations or protection, and specific areas outside the geographical area occupied by a species at the time it is listed, upon a determination that such areas are essential for the conservation of the species. If the proposed rule is made final, section 7 of the Act will prohibit destruction or adverse modification of critical habitat by any activity funded, authorized, or carried out by any Federal agency. Federal agencies proposing actions affecting critical habitat must consult with us on the effects of their proposed actions, under section 7(a)(2) of the Act.

Consideration of Impacts Under Section 4(b)(2) of the Act

Section 4(b)(2) of the Act requires that we designate or revise critical habitat based upon the best scientific data available, after taking into consideration the economic impact, impact on national security, or any other relevant impact of specifying any particular area as critical habitat. We may exclude an area from critical habitat if we determine that the benefits of excluding the area outweigh the benefits of including the area as critical habitat, provided such exclusion will not result in the extinction of the species.

When considering the benefits of inclusion for an area, we consider the additional regulatory benefits that area would receive from the protection from adverse modification or destruction as a result of actions with a Federal nexus (activities conducted, funded, permitted, or authorized by Federal agencies), the educational benefits of mapping areas containing essential features that aid in the recovery of the listed species, and any benefits that may result from designation due to State or Federal laws that may apply to critical habitat.

When considering the benefits of exclusion, we consider, among other things, whether exclusion of a specific area is likely to result in conservation; the continuation, strengthening, or encouragement of partnerships; or implementation of a management plan. In the case of the Lost River sucker and shortnose sucker, the benefits of critical habitat include public awareness of the

presence of the Lost River sucker and shortnose sucker and the importance of habitat protection, and, where a Federal nexus exists, increased habitat protection for the Lost River sucker and shortnose sucker due to protection from adverse modification or destruction of critical habitat. In practice, situations with a Federal nexus exist primarily on Federal lands or for projects undertaken by Federal agencies.

We have not proposed to exclude any areas from critical habitat. However, the final decision on whether to exclude any areas will be based on the best scientific data available at the time of the final designation, including information obtained during the comment period and information about the economic impact of designation. Accordingly, we have prepared a draft economic analysis concerning the proposed critical habitat designation (DEA), which is available for review and comment (see **ADDRESSES** section).

Draft Economic Analysis

The purpose of the DEA is to identify and analyze the potential economic impacts associated with the proposed critical habitat designation for the Lost River sucker and shortnose sucker. The DEA separates conservation measures into two distinct categories according to ''without critical habitat'' and ''with critical habitat'' scenarios. The ''without critical habitat'' scenario represents the baseline for the analysis, considering protections otherwise afforded to the Lost River sucker and shortnose sucker (e.g., under the Federal listing and other Federal, State, and local regulations). The ''with critical habitat'' scenario describes the incremental impacts specifically due to designation of critical habitat for the species. In other words, these incremental conservation measures and associated economic impacts would not occur but for the designation. Conservation measures implemented under the baseline (without critical habitat) scenario are described qualitatively within the DEA, but economic impacts associated with these measures are not quantified. Economic impacts are only quantified for conservation measures implemented specifically due to the designation of critical habitat (i.e., incremental impacts). For a further description of the methodology of the analysis, see Chapter 2, ''Framework for the Analysis,'' of the DEA.

The DEA provides estimated costs of the foreseeable potential economic impacts of the proposed critical habitat designation for the Lost River sucker and shortnose sucker over the next 20 years, which was determined to be the appropriate period for analysis because limited planning information is available for most activities to forecast activity levels for projects beyond a 20-year timeframe. It identifies potential incremental costs as a result of the proposed critical habitat designation; these are those costs attributed to critical habitat over and above those baseline costs attributed to listing. The DEA quantifies economic impacts of Lost River sucker and shortnose sucker conservation efforts associated with the following categories: (1) Activities affecting water supply—these activities may include water management activities such as dam operation and hydropower production within the reservoirs comprising critical habitat, particularly the Klamath Project on Upper Klamath Lake; (2) activities affecting water quality—these activities may include agricultural activities, including livestock grazing, as well as in-water construction activities; and (3) activities affecting fish passage—these activities may include flood control or water diversions that may result in entrainment or lack of access to spawning habitat.

No significant economic impacts are likely to result from the designation of critical habitat. Incremental costs are limited to additional administrative effort to consider potential adverse modification of critical habitat as part of future section 7 consultations for the suckers. In total, incremental administrative efforts are estimated at $586,000, or $51,700 on an annualized basis (assuming a 7 percent discount rate).

As we stated earlier, we are soliciting data and comments from the public on the DEA, as well as all aspects of the proposed rule and our amended required determinations. We may revise the proposed rule or supporting documents to incorporate or address information we receive during the public comment period. In particular, we may exclude an area from critical habitat if we determine that the benefits of excluding the area outweigh the benefits of including the area, provided the exclusion will not result in the extinction of this species.

Required Determinations—Amended

In our December 7, 2011, proposed rule (76 FR 76337), we indicated that we would defer our determination of compliance with several statutes and executive orders until the information concerning potential economic impacts of the designation and potential effects on landowners and stakeholders became available in the DEA. We have now made use of the DEA data to make these determinations. In this document, we affirm the information in our proposed rule concerning Executive Order (E.O.) 12866 (Regulatory Planning and Review), E.O. 12630 (Takings), E.O. 13132 (Federalism), E.O. 12988 (Civil Justice Reform), E.O. 13211 (Energy, Supply, Distribution, and Use), the Unfunded Mandates Reform Act (2 U.S.C. 1501 *et seq.*), the Paperwork Reduction Act of 1995 (44 U.S.C. 3501 *et seq.*), the National Environmental Policy Act (42 U.S.C. 4321 *et seq.*), and the President's memorandum of April 29, 1994, ''Government-to-Government Relations with Native American Tribal Governments'' (59 FR 22951). However, based on the DEA data, we are amending our required determination concerning the Regulatory Flexibility Act (5 U.S.C. 601 *et seq.*).

Regulatory Flexibility Act (5 U.S.C. 601 et seq.)

Under the Regulatory Flexibility Act (RFA; 5 U.S.C. 601 *et seq.*), as amended by the Small Business Regulatory Enforcement Fairness Act of 1996 (SBREFA; 5 U.S.C. 801 *et seq.*), whenever an agency is required to publish a notice of rulemaking for any proposed or final rule, it must prepare and make available for public comment a regulatory flexibility analysis that describes the effects of the rule on small entities (i.e., small businesses, small organizations, and small government jurisdictions). However, no regulatory flexibility analysis is required if the head of the agency certifies the rule will not have a significant economic impact on a substantial number of small entities. The SBREFA amended the RFA to require Federal agencies to provide a certification statement of the factual basis for certifying that the rule will not have a significant economic impact on a substantial number of small entities. Based on our DEA of the proposed designation, we provide our analysis for determining whether the proposed rule would result in a significant economic impact on a substantial number of small entities. Based on comments we receive, we may revise this determination as part of our final rule making.

According to the Small Business Administration, small entities include small organizations such as independent nonprofit organizations; small governmental jurisdictions, including school boards and city and town governments that serve fewer than 50,000 residents; and small businesses (13 CFR 121.201). Small businesses include manufacturing and mining concerns with fewer than 500 employees, wholesale trade entities with fewer than 100 employees, retail

and service businesses with less than $5 million in annual sales, general and heavy construction businesses with less than $27.5 million in annual business, special trade contractors doing less than $11.5 million in annual business, and agricultural businesses with annual sales less than $750,000. To determine if potential economic impacts to these small entities are significant, we considered the types of activities that might trigger regulatory impacts under this designation as well as types of project modifications that may result. In general, the term ''significant economic impact'' is meant to apply to a typical small business firm's business operations.

To determine if the proposed designation of critical habitat for the Lost River sucker and shortnose sucker would affect a substantial number of small entities, we considered the number of small entities affected within particular types of economic activities, such as water management, grazing, transportation, herbicide and pesticide application, forest management, or stream restoration activities. In order to determine whether it is appropriate for our agency to certify that this proposed rule would not have a significant economic impact on a substantial number of small entities, we considered each industry or category individually. In estimating the numbers of small entities potentially affected, we also considered whether their activities have any Federal involvement. Critical habitat designation will not affect activities that do not have any Federal involvement; designation of critical habitat only affects activities conducted, funded, permitted, or authorized by Federal agencies. In areas where the Lost River sucker and shortnose sucker is present, Federal agencies already are required to consult with us under section 7 of the Act on activities they fund, permit, or implement that may affect the species. If we finalize this proposed critical habitat designation, consultations to avoid the destruction or adverse modification of critical habitat would be incorporated into the existing consultation process.

In the DEA, we evaluated the potential economic effects on small entities resulting from implementation of conservation actions related to the proposed designation of critical habitat for the Lost River sucker and shortnose sucker. Only the impacts which may be associated with grazing activities are considered to be borne by small entities and are the focus of the draft economic analysis (Industrial Economics Incorporated (IEc) 2012, p. A–4). Across the study area, 125 businesses are engaged in the beef cattle ranching and farming industry. Of these, 121, or 97 percent, have annual revenues at or below the small business threshold of $750,000, and thus are considered small. A section 7 consultation on grazing activity may cover one or more grazing allotments, and a small entity may be permitted to graze on one or more of these allotments. Because the number of allotments and grazing permittees varies from consultation to consultation, the economic analysis made the simplifying assumption that 1 small entity is affected in each of the 20 allotments adjacent to proposed critical habitat. To estimate average annual revenues per grazing entity, the economic analysis relied on data from the National Agricultural Statistics Service, which provides information on the value of calf and cattle sales as well as the number of farms. Using these data, the economic analysis estimated a value of calf and cattle sales per farm for all the counties in the study area. The economic analysis then averaged this value across the counties to estimate annual revenues per grazing entity of $132,000. The economic analysis noted that this average is significantly below the threshold level defining a small entity. The economic analysis estimated total annualized impacts to the 20 entities that may incur administrative costs of approximately $24,600, or annualized impacts of $2,170. Assuming 20 affected small business entities and that each entity has annual revenues of $132,000, these annualized impacts per small entity are expected to comprise 0.08 percent of annual revenues. Please refer to the DEA of the proposed critical habitat designation for a more detailed discussion of potential economic impacts to small businesses (IEc 2012, pp. A–1–A–6).

Following our evaluation of potential effects to small business entities from this rulemaking, we do not believe that the 20 small business entities in the affected sector represent a substantial number. However, we will further evaluate the potential effects to these small businesses after we receive comments on the draft economic analysis and as we develop our final rulemaking.

In summary, we have considered whether the proposed designation would result in a significant economic impact on a substantial number of small entities. Information for this analysis was gathered from the Small Business Administration, stakeholders, and the Service. We have identified 20 small entities that may be impacted by the proposed critical habitat designation. However, the potential impacts on those entities are expected to comprise only 0.08 percent of their annual revenues. For the above reasons and based on currently available information, we certify that, if promulgated, the proposed critical habitat designation would not have a significant economic impact on a substantial number of small business entities. Therefore, an initial regulatory flexibility analysis is not required.

Authors

The primary authors of this notice are the staff members of the Klamath Falls Fish and Wildlife Office, Region 8, U.S. Fish and Wildlife Service.

Authority: The authority for this action is the Endangered Species Act of 1973, as amended (16 U.S.C. 1531 *et seq.*).

Dated: July 17, 2012.

Eileen Sobeck,

Acting Assistant Secretary for Fish and Wildlife and Parks.

[FR Doc. 2012–18198 Filed 7–25–12; 8:45 am]

BILLING CODE 4310–55–P

DEPARTMENT OF THE INTERIOR

Fish and Wildlife Service

50 CFR Part 17

[Docket No. FWS–R2–ES–2012–0051; 4500030113]

Endangered and Threatened Wildlife and Plants; 90-Day Finding on a Petition To List the Gila Mayfly as Endangered

AGENCY: Fish and Wildlife Service, Interior.

ACTION: Notice of petition finding and initiation of status review.

SUMMARY: We, the U.S. Fish and Wildlife Service (Service), announce a 90-day finding on a petition to list the Gila mayfly (*Lachlania dencyanna*) as endangered under the Endangered Species Act of 1973, as amended (Act), and to designate critical habitat. Based on our review, we find that the petition presents substantial scientific or commercial information indicating that listing the Gila mayfly may be warranted. Therefore, with the publication of this notice, we are initiating a review of the status of the species to determine if listing the Gila mayfly is warranted. To ensure that this status review is comprehensive, we are requesting scientific and commercial data and other information regarding this species. Based on the status review, we will issue a 12-month finding on the petition, which will address whether

the petitioned action is warranted, as provided in section 4(b)(3)(B) of the Act.

DATES: We request that we receive information on or before September 24, 2012. The deadline for submitting an electronic comment using the Federal eRulemaking Portal (see **ADDRESSES** section, below) is 11:59 p.m. Eastern Time on this date. After September 24, 2012, you must submit information directly to the Division of Policy and Directives Management (see **ADDRESSES** section below). Please note that we might not be able to address or incorporate information that we receive after the above requested date.

ADDRESSES: You may submit information by one of the following methods:

(1) *Electronically:* Go to the Federal eRulemaking Portal: *http://www.regulations.gov.* In the Search box, enter Docket No. FWS–R2–ES–2012–0051, which is the docket number for this action. Then click on the Search button. You may submit a comment by clicking on ''Comment Now!''

(2) *By hard copy:* Submit by U.S. mail or hand-delivery to: Public Comments Processing, Attn: FWS–R2–ES–2012–0051; Division of Policy and Directives Management; U.S. Fish and Wildlife Service; 4401 N. Fairfax Drive, MS 2042–PDM; Arlington, VA 22203.

We will post all information we receive on *http://www.regulations.gov.* This generally means that we will post any personal information you provide us (see the Request for Information section below for more details).

FOR FURTHER INFORMATION CONTACT: Wally ''J'' Murphy, Field Supervisor, New Mexico Ecological Services Field Office, 2105 Osuna Road NE., Albuquerque, NM 87113; by telephone at 505–346–2525; or by facsimile at 505–3462542. If you use a telecommunications device for the deaf (TDD), please call the Federal Information Relay Service (FIRS) at 800–877–8339.

SUPPLEMENTARY INFORMATION:

Request for Information

When we make a finding that a petition presents substantial information indicating that listing a species may be warranted, we are required to promptly review the status of the species (status review). For the status review to be complete and based on the best available scientific and commercial information, we request information on the Gila mayfly from governmental agencies, Native American Tribes, the scientific community, industry, and any other interested parties. We seek information on:

(1) The species' biology, range, and population trends, including:

(a) Habitat requirements for feeding, breeding, and sheltering;

(b) Genetics and taxonomy;

(c) Historical and current range, including distribution patterns;

(d) Historical and current population levels, and current and projected trends; and

(e) Past and ongoing conservation measures for the species, its habitat or both.

(2) The factors that are the basis for making a listing determination for a species under section 4(a) of the Act (16 U.S.C. 1531 *et seq.*), which are:

(a) The present or threatened destruction, modification, or curtailment of its habitat or range;

(b) Overutilization for commercial, recreational, scientific, or educational purposes;

(c) Disease or predation;

(d) The inadequacy of existing regulatory mechanisms; or

(e) Other natural or manmade factors affecting its continued existence.

(3) Information regarding surveys for the Gila mayfly.

(4) Information regarding the effects of climate change on water temperature and water levels throughout the Gila mayfly's range.

If, after the status review, we determine that listing the Gila mayfly is warranted, we will propose critical habitat (see definition in section 3(5)(A) of the Act) under section 4 of the Act, to the maximum extent prudent and determinable at the time we propose to list the species. Therefore, we also request data and information on:

(1) What may constitute ''physical or biological features essential to the conservation of the species,'' within the geographical range currently occupied by the species;

(2) Where these features are currently found;

(3) Whether any of these features may require special management considerations or protection;

(4) Specific areas outside the geographical area occupied by the species that are ''essential for the conservation of the species''; and

(5) What, if any, critical habitat you think we should propose for designation if the species is proposed for listing, and why such habitat meets the requirements of section 4 of the Act.

Please include sufficient information with your submission (such as scientific journal articles or other publications) to allow us to verify any scientific or commercial information you include.

Submissions merely stating support for or opposition to the action under consideration without providing supporting information, although noted, will not be considered in making a determination. Section 4(b)(1)(A) of the Act directs that determinations as to whether any species is an endangered or threatened species must be made ''solely on the basis of the best scientific and commercial data available.''

You may submit your information concerning this status review by one of the methods listed in the **ADDRESSES** section. If you submit information via *http://www.regulations.gov,* your entire submission—including any personal identifying information—will be posted on the Web site. If your submission is made via a hardcopy that includes personal identifying information, you may request at the top of your document that we withhold this personal identifying information from public review. However, we cannot guarantee that we will be able to do so. We will post all hardcopy submissions on *http://www.regulations.gov.*

Information and supporting documentation that we received and used in preparing this finding is available for you to review at *http://www.regulations.gov,* or by appointment, during normal business hours, at the U.S. Fish and Wildlife Service, New Mexico Ecological Services Field Office (see **FOR FURTHER INFORMATION CONTACT**).

Background

Section 4(b)(3)(A) of the Act requires that we make a finding on whether a petition to list, delist, or reclassify a species presents substantial scientific or commercial information indicating that the petitioned action may be warranted. We are to base this finding on information provided in the petition, supporting information submitted with the petition, and information otherwise available in our files. To the maximum extent practicable, we are to make this finding within 90 days of our receipt of the petition and publish our notice of the finding promptly in the **Federal Register**.

Our standard for substantial scientific or commercial information within the Code of Federal Regulations (CFR) with regard to a 90-day petition finding is ''that amount of information that would lead a reasonable person to believe that the measure proposed in the petition may be warranted'' (50 CFR 424.14(b)). If we find that substantial scientific or commercial information was presented, we are required to promptly conduct a species status review, which we

subsequently summarize in our 12-month finding.

The ''substantial information'' standard for a 90-day finding differs from the Act's ''best scientific and commercial data'' standard that applies to a status review to determine whether a petitioned action is warranted. A 90-day finding does not constitute a status review under the Act. In a 12-month finding, we will announce our determination as to whether a petitioned action is warranted after we have completed a thorough status review of the species, which is conducted following a substantial 90-day finding. Because the Act's standards for 90-day and status review conducted for a 12-month finding on a petition are different, as described above, a substantial 90-day finding does not mean that our status review and resulting determination will result in a warranted finding.

Petition History

On September 27, 2010, we received a petition dated September 21, 2010, from the Xerces Society for Invertebrate Conservation, WildEarth Guardians, and Dr. William Patrick McCafferty requesting that the Gila mayfly be listed as endangered and that critical habitat be designated under the Act. The petition clearly identified itself as such and included the requisite identification information for the petitioners, required at 50 CFR 424.14(a). In a December 1, 2011, letter to the petitioners, we responded that we reviewed the information presented in the petition and determined that issuing an emergency regulation temporarily listing the species under section 4(b)(7) of the Act was not warranted. We also stated that due to court orders and judicially approved settlement agreements for other listing and critical habitat determinations under the Act that required nearly all of our listing and critical habitat funding for fiscal year 2011, we would not be able to further address the petition at that time but would complete the action when workload and funding allowed. This finding addresses the petition.

Previous Federal Action(s)

On June 25, 2007, we received a formal petition dated June 18, 2007, from Forest Guardians (now WildEarth Guardians), requesting that we: (1) Consider all full species in our Southwest Region ranked as G1 or G2 by the organization NatureServe, except those that are currently listed, proposed for listing, or candidates for listing; and (2) List each species as either endangered or threatened with critical habitat. The petitioned group of species included the Gila mayfly. The petition incorporated all analyses, references, and documentation provided by NatureServe in its online database at *http://www.natureserve.org/* into the petition. We sent a letter dated July 11, 2007, to Forest Guardians acknowledging receipt of the petition and stating that the petition was under review by staff in our Southwest Regional Office. On December 16, 2009 (74 FR 66866), we published a partial 90-day finding on the petition, which included the Gila mayfly. In that finding, we found that the petition did not present substantial information indicating that listing the Gila mayfly may be warranted.

Species Information

The following information is from the 2010 petition and information readily available in our files.

Mayflies are elongate, soft-bodied insects in the order Ephemeroptera. The aquatic nymphs (larvae) have many of the same features as the terrestrial adults, differing mainly in the lack of wings and by the presence of gills on the abdomen (Edmunds and Waltz 1996, p. 127). Mayfly adults generally have two pairs of wings: somewhat triangular forewings and much smaller hind wings.

The Gila mayfly is a member of the family Oligoneuriidae, commonly known as the brush-legged mayflies. The presence of mid-dorsal abdominal tubercles (small projections on the mid-back) is unique to Gila mayfly nymphs and will readily distinguish this species from all other known nymphs in the genus *Lachlania.* Gila mayfly nymphs are 15–17 millimeters (mm) (0.6–0.7 inches (in)) in body length (Koss and Edmunds 1970, p. 55). Gila mayfly adults are distinguished from other *Lachlania* species by the pattern of veins on the wings. In particular, this species differs from another mayfly, *L. saskatchewanensis,* by the greater number of crossveins in the forewing of the Gila mayfly. We accept the characterization of the Gila mayfly as a species because it was properly described in peer-reviewed literature (Koss and Edmunds 1970, pp. 55–65).

The Gila mayfly is the only mayfly species endemic to New Mexico, where it is known from two sites (an unnamed tributary and the East Fork of the Gila River), in the upper Gila River drainage (Koss and Edmunds 1970, p. 59; McCafferty *et al.* 1997, pp. 303–304). Nine other species of mayflies co-occur in the Gila River system, but they have larger ranges and are found in Arizona as well as New Mexico (McCafferty *et al.* 1997, p. 308). The Gila mayfly was first documented in July 1967, when one nymph was collected in Grant County, New Mexico, in an unnamed tributary to the Gila River, 1.6 kilometers (km) (1 mile (mi)) south of Cliff, New Mexico (Koss and Edmunds 1970, pp. 59–60). Sixty-three adults and 223 nymphs were subsequently collected in 1967, at the type locality, approximately 64 km (40 mi) upstream from the first locality, in the East Fork of the Gila River (Koss and Edmunds 1970, pp. 59–60). Unfortunately, no population estimates were conducted at the time of these collections.

The petitioners claim that 2 adults and 10 nymphs were collected in 1969, but because no literature is cited to verify this claim, we are not sure that this information is reliable. We were unable to verify this information, and therefore, we cannot substantiate that the species was collected in 1969. We have no information in our files, nor was there any in the petition, of additional surveys being made until 1987. Between 1987 and 1999, 12 surveys were conducted at previously known Gila mayfly locations, but no Gila mayflies were found despite targeted collection of mayflies. Also, these 12 surveys were conducted during the summer months when nymphs could be found (New Mexico Environment Department (NMED) 2002, p. 7). Likewise, the petition states that extensive benthic macroinvertebrate (invertebrates living on the bottom of the stream that are large enough to see without the aid of a microscope) monitoring work in other portions of the watershed has not revealed this species, although we do not have information to verify this claim. According to the petition, the Gila mayfly is not known to have been observed or collected since 1969.

Gila mayfly habitat is largely unknown, but nymphs have been found clinging to sticks and other vegetation caught in crevices among rocks in rivers and streams (Koss and Edmunds 1970, p. 61). At the time of first collection, the East Fork of the Gila River was described as being warm, turbid, rapid, and 0.15 to 1.8 meters (0.5 to 2 feet) deep (Koss and Edmunds 1970, p. 61).

In general, mayfly eggs are deposited into water (Edmunds and Waltz 1996, p. 126). The time it takes for eggs to hatch varies between mayfly species, and it may range from several weeks to nearly a year (Edmunds and Waltz 1996, p. 126). Mayflies emerge from the eggs as aquatic nymphs, which is the stage at which they spend the majority of their life cycle. Some species of mayflies remain as nymphs for approximately 2

weeks, while others may remain nymphs for up to 2 years (Edmunds and Waltz 1996, p. 126). In general, the length of time they remain at the nymph stage appears to depend on water temperature (Edmunds and Waltz 1996, p. 126). Koss and Edmunds (1970, p. 61) observed that in July, most Gila mayfly nymphs appeared to be 1 to 2 weeks from emergence. Once mayfly nymphs do emerge and become terrestrial, most adults live for 2 hours to 3 days (Edmunds and Waltz 1996, p. 127). However, Koss and Edmunds (1970, pp. 61–62) also noted that Gila mayfly adults were collected in September, indicating that nymphs could possibly be found from July through September.

Commonly, mayfly nymphs are collectors or scrapers feeding on a variety of water particles and algae, as well as some large plants and animal material (Edmunds and Waltz 1996, p. 126). Mayfly feeding habits vary throughout their life cycle. Newly hatched nymphs feed primarily on fine particles of detritus (undissolved organic material), while larger individuals frequently feed on algae (Edmunds and Waltz 1996, p. 126). Adult mayflies have nonfunctioning mouthparts and do not feed (Edmunds and Waltz 1996, p. 127).

In conclusion, the current distribution, abundance, and status of the Gila mayfly are largely unknown. Given that the species has not been verified in the wild since 1967 despite multiple surveys, it is possible that the Gila mayfly may be extinct or that the survey efforts were not adequate to detect any remaining individuals. As part of this finding, we are requesting additional information on the species' status and distribution.

Evaluation of Information for This Finding

Section 4 of the Act (16 U.S.C. 1533) and its implementing regulations at 50 CFR part 424 set forth the procedures for adding a species to, or removing a species from, the Federal Lists of Endangered and Threatened Wildlife and Plants. A species may be determined to be an endangered or threatened species due to one or more of the five factors described in section 4(a)(1) of the Act:

(A) The present or threatened destruction, modification, or curtailment of its habitat or range;

(B) Overutilization for commercial, recreational, scientific, or educational purposes;

(C) Disease or predation;

(D) The inadequacy of existing regulatory mechanisms; or

(E) Other natural or manmade factors affecting its continued existence.

In considering what factors might constitute threats, we must look beyond the mere exposure of the species to the factor to determine whether the species responds to the factor in a way that causes actual impacts to the species. If there is exposure to a factor, but no response, or only a positive response, that factor is not a threat. If there is exposure and the species responds negatively, the factor may be a threat and we then attempt to determine how significant a threat it is. If the threat is significant, it may drive or contribute to the risk of extinction of the species such that the species may warrant listing as endangered or threatened as those terms are defined by the Act. This does not necessarily require empirical proof of a threat. The combination of exposure and some corroborating evidence of how the species is likely impacted could suffice. The mere identification of factors that could impact a species negatively may not be sufficient to compel a finding that listing may be warranted. The information shall contain evidence sufficient to suggest that these factors may be operative threats that act on the species to the point that the species may meet the definition of endangered or threatened under the Act.

In making this 90-day finding, we evaluated whether information regarding threats to the Gila mayfly, as presented in the petition and other information readily available in our files, is substantial, thereby indicating that the petitioned action may be warranted. Our evaluation of this information is presented below.

The petition presented information regarding the following factors as potential threats to the Gila mayfly: Impaired water quality and siltation from grazing and recreational activities, small population size, and climate change. We present a discussion of these factors.

Regarding factor A (the present or threatened destruction, modification, or curtailment of its habitat or range), the petition asserts that habitat alterations through impaired water quality and siltation from grazing and recreational activities are threats to the Gila mayfly. To support the petition's claim that impaired water quality may impact the species, they cite the Environmental Protection Agency's (EPA) water quality impairment report (EPA 2010, pp. 1–2), which states that aluminum levels are above the total maximum daily load (TMDL) designated for the East Fork Gila River, and cites the probable cause of this impairment as being from off-road vehicles and forestry practices. Further, the report states that the East Fork of the Gila River is unlikely to support a coldwater fishery due to these levels of aluminum (EPA 2010, p. 2). The petition states that aluminum is toxic to aquatic insects and cite several papers in support of this (Tabak and Gibbs 1991, pp. 157–166; Regerand *et al.* 2005, pp. 192–198; Kegley *et al.* 2009, p. 1).

Regarding siltation, the petition cites a report by Jacobi (2000), which states that silt constituted nearly 75 percent of the substrate in known Gila mayfly locations. Because the Gila mayfly uses crevices and other small spaces in the substrate, siltation may result in the filling in of these crevices and, therefore, less habitat available. Increased siltation may be due to historical overgrazing and intense recreation. To support the petition's claim that grazing may affect the Gila mayfly, they cite several personal communications regarding the health of the riparian area along the East Fork of the Gila River, as well as a U.S. Forest Service report regarding the two grazing allotments in the area (U.S. Forest Service 2009, pp. 1–3). Also, the petition cites the New Mexico Environment Department's (NMED) TMDL designation for the East Fork of the Gila River, which discusses grazing as a source of impairment for the river (NMED 2002, p. 8). Information in our files supports the petition's claims that habitat destruction and modification may impact the species.

To support the petition's claim that recreation contributes to siltation in the East Fork of the Gila River, they cite several personal communications regarding the use of the Grapevine Campground, which is directly adjacent to the type locality of the Gila mayfly and where all but one specimen has been found. The petition states that recreation results in increased erosion and sedimentation from foot, bike, car, and off-highway vehicle traffic, as well as runoff of pollutants from roads and off-road vehicle trails, introduction of bacteria and excess nutrients from dog and horse waste, manipulation and alteration of streamflow by swimmers, and the trampling of streamside riparian habitat by campers, hikers, rafters, and fishermen. The petition suggests that siltation and other habitat impairments also create a barrier to Gila mayfly dispersal by limiting survival of nymphs that drift downstream.

After reviewing the petition, information presented by the petitioner, and information readily available in our files, we have determined that there is substantial information to indicate the Gila mayfly may warrant listing as a

result of impaired water quality due to possible increased aluminum levels and siltation.

Regarding factors B (overutilization for commercial, recreational, scientific, or educational purposes), C (disease or predation), and D (the inadequacy of existing regulatory mechanisms), the petition did not provide any information that these factors may threaten the Gila mayfly. Regarding factor E (other natural or manmade factors affecting its continued existence), the petition suggests that climate change and the Gila mayfly's small population size threaten its continued existence. We will further evaluate these factors, along with any other potential factors, during our status review and will report our findings in the subsequent 12-month finding.

Finding

Because habitat degradation, such as possible increased aluminum levels and documented substrate siltation and turbidity, may have occurred in the East Fork of the Gila River where the majority of individuals were once found, we find that the petition presents substantial information indicating that the petitioned action may be warranted. The petition states that aluminum is toxic to aquatic insects and cite several papers in support of this (Tabak and Gibbs 1991, pp. 157–166; Regerand *et al.* 2005, pp. 192–198; Kegley *et al.* 2009, p. 1). Also, the petition cites a report by Jacobi (2000), which states that silt constituted nearly 75 percent of the substrate in known Gila mayfly locations. Because the Gila mayfly uses crevices and other small spaces in the substrate, siltation may result in the filling in of these crevices and, therefore, result in less habitat availability. Additionally, information in the petition and readily available in our files indicates that the Gila mayfly has not been observed or collected in the last 50 years. Between 1987 and 1999, 12 surveys were conducted at the known Gila mayfly locations, but no Gila mayflies were found despite targeted collection of mayflies. Given that the species has not been verified in the wild since 1967 despite multiple surveys, it is possible that the Gila mayfly may be extinct or that the survey efforts were not adequate enough to detect any remaining individuals. Hence, the information presented by the petition and readily available in our files contains evidence sufficient to suggest that these stresssors may be operative threats that act on the species to the point that the species may meet the definition of endangered or threatened under the Act. Therefore, on the basis of our determination under section 4(b)(3)(A) of the Act, we determine that the petition presents substantial scientific or commercial information indicating that listing the Gila mayfly throughout its entire range may be warranted as a result of impaired water quality due to possible increased aluminum levels and siltation.

This finding was made primarily based on information provided under factor A, and we will evaluate all information under the five factors during the status review under section 4(b)(3)(B) of the Act. We will fully evaluate these potential threats during our status review, pursuant to the Act's requirement to review the best available scientific information when making our 12-month finding. Accordingly, we encourage the public to consider and submit information related to these and any other threats that may be operating on the Gila mayfly (see ''Request for Information'').

References Cited

A complete list of references cited is available on the Internet at *http://www.regulations.gov* and upon request from the New Mexico Ecological Services Field Office (see **FOR FURTHER INFORMATION CONTACT**).

Authors

The primary authors of this notice are the staff members of the New Mexico Ecological Services Field Office.

Authority

The authority for this action is the Endangered Species Act of 1973, as amended (16 U.S.C. 1531 *et seq.*).

Dated: July 16, 2012.

Daniel M. Ashe,

Director, U.S. Fish and Wildlife Service.

[FR Doc. 2012–18200 Filed 7–25–12; 8:45 am]

BILLING CODE 4310–55–P

DEPARTMENT OF COMMERCE

National Oceanic and Atmospheric Administration

50 CFR Part 600

[Docket No. 070719377–2189–01]

RIN 0648–AV81

Confidentiality of Information; Magnuson-Stevens Fishery Conservation and Management Reauthorization Act; Correction

AGENCY: National Marine Fisheries Service (NMFS), National Oceanic and Atmospheric Administration (NOAA), Commerce.

ACTION: Proposed rule, extension of public comment period and correction.

SUMMARY: The National Marine Fisheries Service (NMFS) is further extending the date by which public comments are due concerning proposed regulations to revise existing regulations governing the confidentiality of information submitted in compliance with any requirement or regulation under the Magnuson-Stevens Fishery Conservation and Management Act (Magnuson-Stevens Act or MSA). NMFS published the proposed rule on May 23, 2012 and announced that the public comment period would end on June 22, 2012. NMFS published a revision on June 13, 2012, extending the comment period to August 21, 2012. With this notice, NMFS is extending the comment period to October 21, 2012. Additionally, this action corrects Release of confidential information, in which the paragraphs were incorrectly numbered.

DATES: The deadline for receipt of comments on the proposed rule published on May 23, 2012 (77 FR 30486), and revised on June 13, 2012 (77 FR 35349), is extended to October 21, 2012.

ADDRESSES: You may submit comments on this document, identified by FDMS Docket Number NOAA–NMFS–2012–0030, by any of the following methods:

- *Electronic Submission:* Submit all electronic public comments via the Federal e-Rulemaking Portal *www.regulations.gov.* To submit comments via the e-Rulemaking Portal, first click the ''submit a comment'' icon, then enter NOAA–NMFS–2012–0030 in the keyword search. Locate the document you wish to comment on from the resulting list and click on the ''Submit a Comment'' icon on the right of that line.
- *Mail:* Submit written comments to Karl Moline, NMFS, Fisheries Statistics Division F/ST1, Room 12441, 1315 East West Highway, Silver Spring, MD 20910.
- Fax (301) 713–1875; Attn: Karl Moline

Instructions: Comments must be submitted by one of the above methods to ensure that the comments are received, documented, and considered by NMFS. Comments sent by any other method, to any other address or individual, or received after the end of the comment period, may not be considered. All comments received are a part of the public record and will generally be posted for public viewing

on *www.regulations.gov* without change. All personal identifying information (e.g., name, address, etc.) submitted voluntarily by the sender will be publicly accessible. Do not submit confidential business information, or otherwise sensitive or protected information. NMFS will accept anonymous comments (enter ''N/A'' in the required fields if you wish to remain anonymous). Attachments to electronic comments will be accepted in Microsoft Word or Excel, WordPerfect, or Adobe PDF file formats only.

FOR FURTHER INFORMATION CONTACT: Karl Moline at 301–427–8225.

SUPPLEMENTARY INFORMATION:

Background

On May 23, 2012, NMFS published a proposed rule at 77 FR 30486 that would revise existing regulations on the handling of information required to be maintained as confidential under the Magnuson-Stevens Act. The purposes of the proposed rule is to make both substantive and non-substantive changes necessary to comply with the MSA as amended by the 2006 Magnuson-Stevens Fishery Conservation and Management Reauthorization Act (MSRA) and the 1996 Sustainable Fisheries Act (SFA). In addition, the rule proposes to address some significant issues that concern NMFS' application of the MSA confidentiality provision to requests for information.

NMFS received several requests from fishery management councils and representatives of fishing and environmental organizations to extend the comment period on the proposed rule in order to allow the councils and other organizations to review the proposed rule and solicit feedback from their members. NMFS published a revision on June 13, 2012 (77 FR 35349), extending the comment period to August 21, 2012.

NMFS has received requests to extend the comment period beyond August 21, 2012, in order to allow councils additional time to prepare comments. We have considered these requests and conclude that an additional 60-day extension is appropriate.

Need for Correction

Paragraph designations errors appear in the proposed rule published on May 23, 2012 (77 FR 30486), beginning on page 30495, in the third column which will likely confuse the public if not corrected. Through this action, NMFS corrects and republishes § 600.425 as follows:

§ 600.425 Release of confidential information.

(a) NMFS will not disclose to the public any confidential information except when:

(1) Authorized by an FMP or regulations under the authority of the North Pacific Council to allow disclosure of observer information to the public of weekly summary bycatch information identified by vessel or for haul-specific bycatch information without vessel identification.

(2) Observer information is necessary in proceedings to adjudicate observer certifications.

(3) Confidential information is required to be submitted to the Secretary for any determination under a limited access program. This exception applies to confidential information that NMFS has used, or intends to use, for a regulatory determination under a limited access program. For the purposes of this exception:

(i) *Limited Access Program* means a program that allocates privileges, such as a portion of the total allowable catch, an amount of fishing effort, or a specific fishing area, to a person.

(ii) *Determination* means a grant, denial, or revocation of privileges; approval or denial of a transfer of privileges; or other similar regulatory determinations by NMFS applicable to a person.

(4) Required to comply with a federal court order. For purposes of this exception:

(i) *Court* means an institution of the judicial branch of the U.S. Federal government consisting of one or more judges who seek to adjudicate disputes and administer justice. Entities not in the judicial branch of the Federal government are not courts for purposes of this section.

(ii) *Court order* means any legal process which satisfies all of the following conditions:

(A) It is issued under the authority of a Federal court;

(B) A judge or magistrate judge of that court signs it; and

(C) It commands NMFS to disclose confidential information as defined under § 600.10.

(5) Necessary for enforcement of the Magnuson-Stevens Act, or any other statute administered by NOAA; or when necessary for enforcement of any State living marine resource laws, if that State has a Joint Enforcement Agreement that is in effect.

(6) The Secretary has obtained written authorization from the person submitting such information to release it to persons for reasons not otherwise provided for in Magnuson-Stevens Act subsection 402(b) and such release does not violate other requirements of the Act. NMFS will apply this exception as follows:

(i) When a permit-holder is required to submit information in compliance with requirements of the Act, the permit-holder or designee may execute the written authorization for release of that information. Otherwise, the person who is required to submit the information and is identified in that information as the submitter may execute the written authorization for that information.

(ii) For observer information, a permit-holder may execute a written authorization for release of observed catch, bycatch, incidental take data, economic data, recorded biological sample data, and other information collected for scientific and management purposes by an observer while carried aboard the permit-holder's vessel.

(iii) A permit-holder or designee or other person described under paragraph (a)(6)(i) of this section must provide a written statement authorizing the release of the information and specifying the person(s) to whom the information should be released.

(iv) A permit-holder or designee or other person described under paragraph (a)(6)(i) of this section must prove identity by a statement of identity consistent with 28 U.S.C. 1746, which permits statements to be made under penalty of perjury as a substitute for notarization. The statement of identity must be in the following form:

(A) If executed outside the United States: ''I declare (or certify, verify, or state) under penalty of perjury under the laws of the United States of America that the foregoing is true and correct. Executed on (date). (Signature)''.

(B) If executed within the United States, its territories, possessions, or commonwealths: ''I declare (or certify, verify, or state) under penalty of perjury that the foregoing is true and correct. Executed on (date). (Signature)''.

(v) The Secretary must determine that a release under paragraph (a)(6) of this section does not violate other requirements of the Magnuson-Stevens Act and other applicable laws.

(b) [Reserved]

Authority: 5 U.S.C. 561 and 16 U.S.C. 1801 *et seq.*

Dated: July 20, 2012.

Alan D. Risenhoover,

Director, Office of Sustainable Fisheries, performing the functions and duties of the Deputy Assistant Administrator for Regulatory Programs, National Marine Fisheries Service.

[FR Doc. 2012–18295 Filed 7–25–12; 8:45 am]

BILLING CODE 3510–22–P

Notices

Federal Register

Vol. 77, No. 144

Thursday, July 26, 2012

This section of the FEDERAL REGISTER contains documents other than rules or proposed rules that are applicable to the public. Notices of hearings and investigations, committee meetings, agency decisions and rulings, delegations of authority, filing of petitions and applications and agency statements of organization and functions are examples of documents appearing in this section.

DEPARTMENT OF AGRICULTURE

Animal and Plant Health Inspection Service

[Docket No. APHIS–2006–0035]

Gull Hazard Reduction Program at John F. Kennedy International Airport; Record of Decision

AGENCY: Animal and Plant Health Inspection Service, USDA.

ACTION: Notice.

SUMMARY: We are advising the public of our record of decision for the final supplemental environmental impact statement for the Gull Hazard Reduction Program at John F. Kennedy International Airport.

DATES: *Effective Date:* July 26, 2012.

ADDRESSES: You may read the final supplemental environmental impact statement and the record of decision in our reading room. The reading room is located in room 1141 of the USDA South Building, 14th Street and Independence Avenue SW., Washington, DC. Normal reading room hours are 8 a.m. to 4:30 p.m., Monday through Friday, except holidays. To be sure someone is there to help you, please call (202) 799–7039 before coming. The documents are also available on the Internet at *http://www.aphis.usda.gov/regulations/ws/ws_environmental_new_york.shtml* and are posted on the Regulations.gov Web site at *http://www.regulations.gov/#!docketDetail;D=APHIS-2006-0035.* To obtain copies of the documents, contact the person listed under **FOR FURTHER INFORMATION CONTACT**.

FOR FURTHER INFORMATION CONTACT: Mr. Martin Lowney, Wildlife Services, APHIS, 1930 Route 9, Castleton, NY 12033–9653; (518) 477–4837.

SUPPLEMENTARY INFORMATION:

Background

On April 3, 2006, the Animal and Plant Health Inspection Service (APHIS) published a notice in the **Federal Register** (71 FR 16547–16548, Docket No. APHIS–2006–0035) announcing APHIS' intent to prepare a supplemental environmental impact statement (EIS) to address wildlife hazards to aircraft resulting from changes in wildlife populations and land uses in and around the John F. Kennedy International Airport. This action is a supplement to the Gull Hazard Reduction Program at John F. Kennedy International Airport Final EIS, May 1994.

The supplemental EIS has been prepared in cooperation with the Department of Interior's Fish and Wildlife Service and National Park Service, the Federal Aviation Administration, the New York State Department of Environmental Conservation, the New York City Department of Parks and Recreation, the New York City Department of Environmental Protection, and the Port Authority of New York and New Jersey.

A notice of availability regarding the draft supplemental EIS was published by the Environmental Protection Agency (EPA) in the **Federal Register** on January 14, 2011 (76 FR 2680, Docket No. ER–FRL–8994–6), and a notice of availability regarding the final supplemental EIS was published by EPA in the **Federal Register** on May 11, 2012 (77 FR 27771, Docket No. ER–FRL–9002–9). The NEPA implementing regulations in 40 CFR 1506.10 require a minimum 30-day waiting period between the time a final EIS is published and the time an agency makes a decision on an action covered by the EIS. APHIS has reviewed the final supplemental EIS and comments received during the 30-day waiting period and has concluded that it has fully analyzed the issues covered by the draft supplemental EIS and those comments and suggestions submitted by commenters. Based on our final supplemental EIS, the response to public comments, and other pertinent scientific data, APHIS has prepared a record of decision.

The record of decision has been prepared in accordance with: (1) The National Environmental Policy Act of 1969 (NEPA), as amended (42 U.S.C. 4321 *et seq.*); (2) regulations of the Council on Environmental Quality for implementing the procedural provisions of NEPA (40 CFR parts 1500–1508); (3) USDA regulations implementing NEPA (7 CFR part 1b); and (4) APHIS' NEPA Implementing Procedures (7 CFR part 372).

Done in Washington, DC, this 20th day of July 2012.

Kevin Shea,

Acting Administrator, Animal and Plant Health Inspection Service.

[FR Doc. 2012–18223 Filed 7–25–12; 8:45 am]

BILLING CODE 3410–34–P

DEPARTMENT OF AGRICULTURE

Forest Service

Notice of Southwest Idaho Resource Advisory Committee Meeting

AGENCY: Forest Service, USDA.

ACTION: Notice of meeting.

SUMMARY: Pursuant to the authorities in the Federal Advisory Committee Act (Pub. L. 92–463) and under the Secure Rural Schools and Community Self-Determination Act of 2000, as amended, (Pub. L. 110–343), the Boise, Payette, Salmon-Challis, Sawtooth, and Wallowa-Whitman National Forests' Southwest Idaho Resource Advisory Committee will conduct a business meeting. The meeting is open to the public.

DATES: Wednesday, August 29, 2012, beginning at 10:00 a.m.

ADDRESSES: Idaho Counties Risk Management Program Building, 3100 South Vista Avenue, Boise, Idaho.

SUPPLEMENTARY INFORMATION: Agenda topics will include review and approval of project proposals, and is an open public forum.

FOR FURTHER INFORMATION CONTACT: Kim Pierson, Designated Federal Official, at (208) 347–0301 or email *kpierson@fs.fed.us*.

Dated: *July 19, 2012.*

Keith B. Lannom,

Forest Supervisor, Payette National Forest.

[FR Doc. 2012–18244 Filed 7–25–12; 8:45 am]

BILLING CODE 3410–11–P

COMMISSION ON CIVIL RIGHTS

Sunshine Act Meeting

AGENCY: United States Commission on Civil Rights.

ACTION: Notice of meeting.

DATE AND TIME: Friday, August 3, 2012; 2:00 p.m. EDT.

PLACE: Via Teleconference, Public Dial In: 1–877–681–3374, Conference ID # 4923945.

Meeting Agenda

This meeting is open to the public, except where noted otherwise.

I. Program Planning

Approval of the topics for the 2013 Statutory Report and two Briefing Reports—a single vote on the following package:

(a) The topic of sexual assault in the military, as set forth in the concept paper prepared by Commissioner Kladney, for the 2013 Statutory Report; and

(b) The topic of EEOC's Conviction Records Policy, as set forth in the concept paper prepared by Commission Kirsanow, for a briefing report; and

(c) The topic of the civil rights of veterans, as set forth in the concept paper prepared by Chairman Castro, for a briefing report.

IV. Adjourn

CONTACT PERSON FOR FURTHER INFORMATION: Lenore Ostrowsky, Acting Chief, Public Affairs Unit (202) 376–8591. TDD: (202) 376–8116.

Persons with a disability requiring special services, such as an interpreter for the hearing impaired, should contact Pamela Dunston at least seven days prior to the meeting at 202–376–8105. TDD: (202) 376–8116.

Dated: July 24, 2012.

Peter Minarik,

Acting RPCU Chief, Office of the Staff Director.

[FR Doc. 2012–18394 Filed 7–24–12; 4:15 pm]

BILLING CODE 6335–01–P

DEPARTMENT OF COMMERCE

Foreign-Trade Zones Board

[B–52–2012]

Foreign-Trade Zone 26—Atlanta, GA; Application for Reorganization (Expansion of Service Area) Under the Alternative Site Framework

An application has been submitted to the Foreign-Trade Zones (FTZ) Board (the Board) by the Georgia Foreign-Trade Zone, Inc., grantee of FTZ 26, requesting authority to expand its service area under the alternative site framework (ASF) adopted by the Board (15 CFR 400.2(c)). The ASF is an option for grantees for the establishment or reorganization of general-purpose zones and can permit significantly greater flexibility in the designation of new ''usage-driven'' FTZ sites for operators/users located within a grantee's ''service area'' in the context of the Board's standard 2,000-acre activation limit for a general-purpose zone project. The application was submitted pursuant to the Foreign-Trade Zones Act, as amended (19 U.S.C. 81a-81u), and the regulations of the Board (15 CFR part 400). It was formally filed on July 20, 2012.

FTZ 26 was approved by the Board on January 17, 1977 (Board Order 115, 42 FR 4186, 01/24/77) and reorganized under the ASF on November 26, 2010 (Board Order 1725, 75 FR 76953, 12/10/10).

The zone project currently has a service area that includes the Georgia counties of Haralson, Paulding, Polk, Floyd, Bartow, Chattooga, Gordon, Pickens, Gilmer, Walker, Whitfield, Murray, Forsyth, Dawson, Hall, Banks, Lumpkin, Fulton, DeKalb, Gwinnett, Cobb, Douglas, Clayton, Henry, Fayette, Rockdale, Cherokee, Carroll, Coweta, Heard, Troup, Meriwether, Pike, Spalding, Butts, Lamar, Upson, Jasper, Newton, Morgan, Greene, Walton, Oconee, Clarke, Barrow, Jackson, Bibb, Crawford, Jones, Monroe, Putnam, Richmond, Harris, Talbot, and Muscogee in their entirety and portions of White, Franklin, Peach, Houston, and Twiggs Counties, in and adjacent to the Atlanta Customs and Border Protection port of entry with the exception of Walker, Whitfield, and Murray Counties which are adjacent to the Chattanooga Customs and Border Protection port of entry, and Richmond County which is adjacent to the Columbia Customs and Border Protection port of entry. The applicant is requesting authority to expand the service area of the zone to include a portion of Columbia County, Georgia, as described in the application. If approved, the grantee would be able to serve sites throughout the expanded service area based on companies' needs for FTZ designation. The proposed expanded service area is adjacent to the Columbia, South Carolina Customs and Border Protection port of entry.

In accordance with the Board's regulations, Kathleen Boyce of the FTZ Staff is designated examiner to evaluate and analyze the facts and information presented in the application and case record and to report findings and recommendations to the Board.

Public comment is invited from interested parties. Submissions (original and 3 copies) shall be addressed to the Board's Executive Secretary at the address below. The closing period for their receipt is September 24, 2012. Rebuttal comments in response to material submitted during the foregoing period may be submitted during the subsequent 15-day period to October 9, 2012.

A copy of the application will be available for public inspection at the Office of the Executive Secretary, Foreign-Trade Zones Board, Room 2111, U.S. Department of Commerce, 1401 Constitution Avenue NW., Washington, DC 20230–0002, and in the ''Reading Room'' section of the Board's Web site, which is accessible via *www.trade.gov/ftz.* For further information, contact Kathleen Boyce at *Kathleen.Boyce@trade.gov* or (202) 482–1346.

Dated: July 20, 2012.

Andrew McGilvray,

Executive Secretary.

[FR Doc. 2012–18282 Filed 7–25–12; 8:45 am]

BILLING CODE P

DEPARTMENT OF COMMERCE

International Trade Administration

[A–570–956]

Seamless Carbon and Alloy Steel Standard, Line, and Pressure Pipe From the People's Republic of China: Rescission of Antidumping Duty Administrative Review

AGENCY: Import Administration, International Trade Administration, Department of Commerce.

SUMMARY: In response to a request from an interested party, the United States Steel Corporation, the Department of Commerce (the Department) initiated an administrative review of the antidumping duty order on seamless carbon and alloy steel standard, line, and pressure pipe from the People's Republic of China. The period of review is November 10, 2010, through October 31, 2011. Based on the timely withdrawal of the request for review submitted by United States Steel Corporation, we are now rescinding this administrative review.

DATES: *Effective Date:* July 26, 2012.

FOR FURTHER INFORMATION CONTACT: Brandon Farlander or Charles Riggle, AD/CVD Operations, Office 4, Import Administration, International Trade Administration, U.S. Department of

Commerce, 14th Street and Constitution Avenue NW., Washington, DC 20230; telephone: (202) 482–0182 or (202) 482–0650, respectively.

SUPPLEMENTARY INFORMATION:

Background

On December 30, 2011, based on a timely request for review by the United States Steel Corporation, the Department published in the **Federal Register** a notice of initiation of an administrative review of the antidumping duty order on seamless carbon and alloy steel standard, line, and pressure pipe from the People's Republic of China covering the period November 10, 2010, through October 31, 2011. *See Initiation of Antidumping and Countervailing Duty Administrative Reviews and Request for Revocation in Part,* 76 FR 82268 (December 30, 2011). The review covers 32 companies: Anhui Tianda Oil Pipe; Baoshan Iron & Steel Co., Ltd.; Beijing Sai Lin Ke Hardware Co., Ltd.; Hengyang Steel Tube Group Int'l Trading Inc.; Hengyang Valin MPM Tube Co., Ltd.; Hengyang Valin Steel Tube Co., Ltd.; Hunan Valin Iron & Steel Group Co., Ltd.; Hunan Valin Steel Co., Ltd.; Hunan Valin Xiangtan Iron & Steel Co., Ltd.; Jiangsu Changbao Steel Tube Co., Ltd.; Jiangsu Chengde Steel Tube Share Company; Jiangsu Xigang Group Co., Ltd.; Jiangyin City Changjiang Steel Pipe Co., Ltd.; LDR Industries, Inc.; Pangang Group Chengdu Iron & Steel Co.; Shandong HuaBao Steel Pipe; Shandong Luxing Steel Pipe; Shanghai Tianyang Steel Tube; Tianguan Yuantong Pipe Product Co., Ltd.; Tianjin Pipe (Group) Corporation; Tianjin Pipe International Economic & Trading Corp.; Tianjin Pipe Iron Manufacturing Co., Ltd.; TPCO Charging Development Co., Ltd.; Wuxi Resources Steel Making Co., Ltd.; Wuxi Seamless Special Pipe Co., Ltd.; Wuxi Sifang Steel Tube Co., Ltd.; Wuxi Zhenda Special Steel Tube Manufacturing; Xigang Seamless Steel Tube; Xuzhou Global Pipe and Fitting Mfg.; Yangzhou Chengde Steel Tube Co., Ltd.; Yangzhou Lontrin Steel Tube Co., Ltd.; and Yantai Lubao Steel Tube. No other party requested a review.

On March 29, 2012, and amended on April 3, 2012, the United States Steel Corporation withdrew its request for an administrative review of the 32 companies.

Rescission of Review

Pursuant to 19 CFR 351.213(d)(1), the Department will rescind an administrative review if the party that requested the review withdraws its request within 90 days of the publication of the notice of initiation of the requested review, or withdraws at a later date if the Department exercises its discretion to extend the time limit for withdrawing the request. In this case, the United States Steel Corporation withdrew its request within the 90-day deadline and no other party requested an administrative review of the antidumping duty order. Therefore, we are rescinding the administrative review of seamless carbon and alloy steel standard, line, and pressure pipe from the People's Republic of China for the period November 1, 2010, through October 31, 2011.

Assessment

The Department will instruct U.S. Customs and Border Protection (CBP) to assess antidumping duties on all appropriate entries. Antidumping duties shall be assessed at rates equal to the cash deposit or bonding rate of estimated antidumping duties required at the time of entry, or withdrawal from warehouse, for consumption, in accordance with 19 CFR 351.212(c)(1)(i). The Department intends to issue appropriate assessment instructions directly to CBP 15 days after publication of this notice.

Notifications

This notice serves as a final reminder to importers for whom this review is being rescinded of their responsibility under 19 CFR 351.402(f)(2) to file a certificate regarding the reimbursement of antidumping duties prior to liquidation of the relevant entries during this review period. Failure to comply with this requirement could result in the Secretary's presumption that reimbursement of the antidumping duties occurred and the subsequent assessment of double antidumping duties.

This notice also serves as a reminder to parties subject to administrative protective order (APO) of their responsibility concerning the return or destruction of proprietary information disclosed under APO in accordance with 19 CFR 351.305, which continues to govern business proprietary information in this segment of the proceeding. Timely written notification of the return/destruction of APO materials or conversion to judicial protective order is hereby requested. Failure to comply with the regulations and terms of an APO is a violation which is subject to sanction.

This notice is issued and published in accordance with section 777(i)(1) of the Tariff Act of 1930, as amended, and 19 CFR 351.213(d)(4).

Dated: July 19, 2012.

Christian Marsh,

Deputy Assistant Secretary for Antidumping and Countervailing Duty Operations.

[FR Doc. 2012–18280 Filed 7–25–12; 8:45 am]

BILLING CODE 3510–DS–P

DEPARTMENT OF COMMERCE

International Trade Administration

Renewable Energy and Energy Efficiency Advisory Committee; Extended Deadline for Solicitation of Nominations for Membership

AGENCY: International Trade Administration, Department of Commerce.

ACTION: Notice.

SUMMARY: The U.S. Department of Commerce has extended the deadline by which it will accept nominations to serve on the Renewable Energy and Energy Efficiency Advisory Committee. Nominations submitted by 11:59 p.m. (EDT) on August 1, 2012 will be considered. Nominations submitted prior to this deadline extension will also be considered. Detailed information on nomination procedures, qualifications for membership, and on the composition and purpose of the Renewable Energy and Energy Efficiency Advisory Committee can be found in **Federal Register** of June 26, 2012, 77 FR 38040.

Nominations may be emailed to Jennifer Derstine at *jennifer.derstine@trade.gov*, or faxed to the attention of Jennifer Derstine at 202–482–5665, or mailed to Jennifer Derstine, Office of Energy & Environmental Industries, Room 4053, U.S. Department of Commerce, 1401 Constitution Avenue NW., Washington, DC 20230, and must be received by 11:59 p.m. (EDT) on August 1, 2012. Nominees selected for appointment to the Committee will be notified by return mail.

FOR FURTHER INFORMATION CONTACT: Jennifer Derstine by email at *Jennifer.derstine@trade.gov*; Office of Energy & Environmental Industries, Room 4053, U.S. Department of Commerce, 1401 Constitution Avenue NW., Washington, DC 20230; phone 202–482–3889; fax 202–482–5665.

Dated: July 20, 2012.

Catherine P. Vial,

Team Leader, Environmental Industries, Office of Energy and Environmental Industries.

[FR Doc. 2012–18314 Filed 7–25–12; 8:45 am]

BILLING CODE 3510–DR–P

DEPARTMENT OF COMMERCE

National Oceanic and Atmospheric Administration

RIN 0648–XC124

Advisory Committee and Species Working Group Technical Advisor Appointment

AGENCY: National Marine Fisheries Service (NMFS), National Oceanic and Atmospheric Administration (NOAA), Commerce.

ACTION: Nominations.

SUMMARY: NMFS is soliciting nominations to the Advisory Committee to the U.S. Section to the International Commission for the Conservation of Atlantic Tunas (ICCAT) as established by the Atlantic Tunas Convention Act (ATCA). NMFS is also soliciting nominations for technical advisors to the Advisory Committee's species working groups.

DATES: Nominations must be received by October 1, 2012.

ADDRESSES: Nominations should be sent via email (*Rachel.O'Malley@noaa.gov*). In the alternative, nominations may be sent via mail to Rachel O'Malley at NMFS, Office of International Affairs, Room 12622, 1315 East-West Highway, Silver Spring, MD 20910.

FOR FURTHER INFORMATION CONTACT: Rachel O'Malley, Office of International Affairs, 301–427–8373.

SUPPLEMENTARY INFORMATION: Section 971b of ATCA (16 U.S.C. 971 et seq.) requires that an advisory committee be established that shall be comprised of: (1) Not less than five nor more than 20 individuals appointed by the U.S. Commissioners to ICCAT who shall select such individuals from the various groups concerned with the fisheries covered by the ICCAT Convention; and (2) the chairs (or their designees) of the New England, Mid-Atlantic, South Atlantic, Caribbean, and Gulf Fishery Management Councils. Each member of the Advisory Committee appointed under paragraph (1) shall serve for a term of two years and be eligible for reappointment. All members of the Advisory Committee are appointed in their individual professional capacity and undergo a background screening. Any individual appointed to the Committee who is unable to attend all or part of an Advisory Committee meeting may not appoint another person to attend such meetings as his or her proxy. Members of the Advisory Committee shall receive no compensation for their services. The Secretary of Commerce and the Secretary of State may pay the necessary travel expenses of members of the Advisory Committee. There are currently 20 appointed Advisory Committee members. The terms of these members expire on December 31, 2012.

Section 971b(1) of ATCA specifies that the U.S. Commissioners may establish species working groups for the purpose of providing advice and recommendations to the U.S. Commissioners and to the Advisory Committee on matters relating to the conservation and management of any highly migratory species covered by the ICCAT Convention. Any species working group shall consist of no more than seven members of the Advisory Committee and no more than four technical advisors, as considered necessary by the Commissioners. Currently, there are five species working groups advising the Committee and the U.S. Commissioners: a Bluefin Tuna Working Group, a Swordfish Working Group, a Sharks Working Group, a Billfish Working Group, and a Bigeye Tuna, Albacore, Yellowfin, and Skipjack (BAYS) Tunas Working Group. Technical Advisors to the species working groups serve at the request of the Commissioners; therefore the Commissioners can choose to alter these appointments at any time. As with Committee Members, Technical Advisors may not be represented by a proxy during any official meetings of the Advisory Committee.

Nominations to the Advisory Committee or to a species working group should include a letter of interest and a resume or curriculum vitae. Self-nominations are acceptable. Letters of recommendation are useful but not required. When making a nomination, please specify which appointment (Advisory Committee member or technical advisor to a species working group) is being sought. Nominees may also indicate which of the species working groups is preferred, although placement on the requested group is not guaranteed.

Dated: July 20, 2012.

Christopher Rogers,

Acting Director, Office of International Affairs, National Marine Fisheries Service.

[FR Doc. 2012–18296 Filed 7–25–12; 8:45 am]

BILLING CODE 3510–22–P

DEPARTMENT OF COMMERCE

National Oceanic and Atmospheric Administration

RIN 0648–XC117

Supplement to the Draft Programmatic Restoration Plan and Programmatic Environmental Impact Statement

AGENCY: National Marine Fisheries Service (NMFS), National Oceanic and Atmospheric Administration (NOAA), Commerce.

ACTION: Notice of availability; request for comments.

SUMMARY: The National Oceanic and Atmospheric Administration (NOAA) and the U.S. Department of the Interior, Fish and Wildlife Service, Washington Department of Ecology and Washington Department of Fish and Wildlife, Suquamish Tribe, Muckleshoot Indian Tribe, U.S. Army Corps of Engineers, and the U.S. Environmental Protection Agency are collectively referred to as the Trustee Council for this case. The Trustee Council is providing notice that the Supplement to the Draft Programmatic Restoration Plan and Programmatic Environmental Impact Statement (RP/PEIS) are being released for public comment. The Restoration Plan identifies a restoration approach to compensate for injuries to natural resources in the Lower Duwamish River. The Trustees seek damages from potentially responsible parties (PRPs) to restore, rehabilitate, replace or acquire the equivalent of natural resources and services injured by the release of hazardous substances in the Lower Duwamish River. This notice provides details on the availability of and opportunity to comment on the Supplement to the Draft Programmatic Restoration Plan and PEIS. Comments may be submitted in written form or verbally at a public meeting.

DATES: Written comments must be received by October 10, 2012.

Public meetings to discuss and comment on the Draft RP/PEIS will be held as follows:

- *Wednesday, August 22, 2012,* 6:30–8:30 p.m., South Seattle Community College, 6737 Corson Ave. South, Seattle, WA, 98108–3450.
- *Thursday, August 23, 2012,* 10–11:30 a.m., South Seattle Community College, 6737 Corson Ave. South, Seattle, WA, 98108–3450.

ADDRESSES: Written comments on the Supplement to the Draft RP/PEIS should be sent to Rebecca Hoff, NOAA DARC NW., 7600 Sand Point Way NE., Seattle, WA 98115. Comments may be

submitted electronically to *mailto: DuwamishPEIS.DARRP@noaa.gov.*

The Supplement to the Draft Restoration Plan and PEIS are available for viewing at the following locations:

- Seattle Central Library, General Reference Desk, 1000 Fourth Ave., Seattle, WA 98104
- Delridge Library, General Reference Desk, 5423 Delridge Way SW., Seattle, WA 98106
- South Park Library, General Reference Desk, 8604 Eighth Ave. S. at South Cloverdale Street, Seattle, WA 98108

A full electronic copy may be downloaded at: *http://www.darrp.noaa.gov/northwest/lowerduwamishriver/index.html.*

FOR FURTHER INFORMATION CONTACT: Rebecca Hoff at (206) 526–6276 or email at *Rebecca.Hoff@noaa.gov.*

SUPPLEMENTARY INFORMATION: The Comprehensive Environmental Response, Compensation, and Liability Act of 1980 (CERCLA), the Oil Pollution Act (OPA) of 1990, the Clean Water Act (CWA), the National Oil and Hazardous Substances Pollution Contingency Plan (National Contingency Plan [NCP]), and other applicable federal and state laws and regulations provide a legal framework for addressing injuries to the nation's natural resources resulting from releases of hazardous substances and discharges of oil. The National Environmental Policy Act (NEPA) of 1960 requires an assessment of any federal action that may impact the environment, in this case development of a Restoration Plan.

Hazardous substance releases into the Lower Duwamish River (LDR) have resulted in the contamination of the sediments and injuries to natural resources. The Elliott Bay Trustee Council (Trustees) is developing the Lower Duwamish River Natural Resource Damage Assessment (LDR/NRDA) to determine the extent of injuries to natural resources resulting from these releases. Natural resources include fish, shellfish, wildlife, sediments, water quality, and the services they provide. Trustees are also determining how to restore injured natural resources and lost resource services. The Restoration Plan, which will guide decision-making regarding the implementation of LDR/NRDA restoration activities, is also a Programmatic Environmental Impact Statement (PEIS). The PEIS analyzes the environmental impacts of the alternatives that may be employed by the Trustees to restore, replace, rehabilitate, and/or acquire the equivalent of the injured natural resources and their services. The Trustees evaluated three alternatives—the No-Action Alternative, which is required to be included in the analysis; the Species-Specific Restoration Alternative and the Integrated Habitat Restoration Alternative. The Trustees' preferred alternative is Integrated Habitat Restoration, which is a comprehensive plan based on restoration of key habitats that, together, will benefit the range of different resources injured by releases of hazardous substances in the LDR. In addition, the Trustees have included a detailed description of the methodology considered for use in a settlement based approach to injury assessment for the Lower Duwamish River.

A previous draft RP/PEIS was made available for public review on May 22, 2009 (74 FR 25735, pages 25735–5736, EIS No. 20090171), with the comment period ending on July 28, 2009. In the current document, the Trustees added more detail about the injury assessment and restoration valuation methodology used in the LDR/NRDA, as requested in some of the comments received on the previous draft, and made some other more minor changes to address other comments.

The Trustee Council has opened an Administrative Record (Record). The Record includes documents that the Trustees relied upon during the development of the Draft Restoration Plan and Draft PEIS. The Record is on file at the offices of NOAA. The Record is also available at: *http://www.darrp.noaa.gov/northwest/lower duwamishriver/admin.html*

Dated: July 20, 2012.

Brian T. Pawlak,

Acting Director, Office of Habitat Conservation, National Marine Fisheries Service.

[FR Doc. 2012–18293 Filed 7–25–12; 8:45 am]

BILLING CODE 3510–22–P

DEPARTMENT OF COMMERCE

National Oceanic and Atmospheric Administration

RIN 0648–XC108

Magnuson-Stevens Act Provisions; General Provisions for Domestic Fisheries; Application for Exempted Fishing Permits

AGENCY: National Marine Fisheries Service (NMFS), National Oceanic and Atmospheric Administration (NOAA), Commerce.

ACTION: Notice; request for comments

SUMMARY: The Regional Administrator, Southwest Region, NMFS, has made a preliminary determination that an application for an Exempted Fishing Permit (EFP) warrants further consideration. The application was submitted by members of the Pacific sardine fishing industry who request an exemption from seasonal closures of the directed fishery to conduct a survey designed to estimate the population size of Pacific sardine. NMFS requests public comment on the application.

DATES: Comments must be received by August 10, 2012.

ADDRESSES: You may submit comments on this notice identified by 0648–XC108 by any one of the following methods:

- *Mail:* Rodney R. McInnis, Regional Administrator, Southwest Region, NMFS, 501 West Ocean Blvd., Suite 4200, Long Beach, CA 90802.
- *Fax:* (562)980–4047, Att: Joshua Lindsay

FOR FURTHER INFORMATION CONTACT: A copy of the application can viewed at the following Web site *http://swr.nmfs.noaa.gov/fmd/cps/;* or by contacting Joshua Lindsay, Southwest Region, NMFS, (562) 980–4034.

SUPPLEMENTARY INFORMATION: On April 3, 2012, NMFS published a proposed rule to implement the harvest guideline (HG) and annual specifications for the 2012 Pacific sardine fishing season off the U.S. West Coast (77 FR 19991). As part of these management measures the Pacific Fishery Management Council recommended, and NMFS proposed, that 3,000 metric tons (mt) of the maximum harvest guideline (HG) be initially subtracted and set aside for potential industry-based research projects or EFPs. The 3,000 mt set-aside was intended to allow for potential research fishing in the second seasonal period (July 1—September 14, 2012) to occur if that period's directed fishery allocation is reached and directed fishing is closed.

An EFP would allow the fishing activities proposed by the applicants to occur when directed fishing is not allowed. At the April 2012 Council meeting, the Council recommended that NMFS issue an EFP for the total 3,000 mt of the 3,000 mt initially set aside. The applicants proposed the use of 3,000 mt to replicate summer surveys conducted under EFPs approved in 2009, 2010, and 2011.

One of the goals set forth in the EFP application is the development of an index of biomass for Pacific sardine, with the desire that this index be included in the subsequent Pacific sardine stock assessment. If NMFS does not issue this EFP, then the set-aside will be re-allocated to the third period's directed harvest allocation. Likewise,

any amount of the set-aside allocated to an EFP for use during the closed fishing time in the second allocation period (prior to September 15), but not utilized, will roll into the third allocation period's directed fishery.

Authority: 16 U.S.C. 1801 *et seq.*

Dated: July 23, 2012.

Emily H. Menashes

Deputy Director, Office of Sustainable Fisheries, National Marine Fisheries Service.

[FR Doc. 2012–18302 Filed 7–25–12; 8:45 am]

BILLING CODE 3510–22–P

DEPARTMENT OF COMMERCE

National Oceanic and Atmospheric Administration

RIN 0648–XC126

Pacific Fishery Management Council; Public Meeting

AGENCY: National Marine Fisheries Service (NMFS), National Oceanic and Atmospheric Administration (NOAA), Commerce.

ACTION: Notice of public meeting.

SUMMARY: The Pacific Fishery Management Council (Pacific Council) will hold a trawl catch share program gear workshop (workshop), which is open to the public.

DATES: The workshop will be held Wednesday, August 29, 2012 from 1 p.m. until business for the day is completed. The workshop will reconvene Thursday, August 30, 2012 from no earlier than 8 a.m. until 4 p.m. or business for the day has been completed.

ADDRESSES: The meeting will be held at the Sheraton Portland Airport in the Mount Saint Helens Room, 8235 NE Airport Way, Portland OR 97220, telephone: (503) 281–2500.

Council address: Pacific Council, 7700 NE Ambassador Place, Suite 101, Portland, OR 97220–1384.

FOR FURTHER INFORMATION CONTACT: Mr. LB Boydstun, Fishery Advisor: (916) 844–4358 or the Pacific Council Office at (503) 820–2280.

SUPPLEMENTARY INFORMATION: The primary purpose of the workshop is to review the gear restrictions (including area of use) which apply under the recently-implemented Trawl Fishery Rationalization program, and discuss the need for such restrictions in the context of that program. The workshop will include scoping various gear restriction alternatives that were recommended by the Trawl Rationalization Regulatory Evaluation Committee at the November 2011 meeting of the Pacific Council. A workshop report will be prepared by Pacific Council staff for Pacific Council consideration at (or following) its November 2012 Pacific Council meeting in Costa Mesa, CA. No management actions will be decided in the workshop. The task will be to develop recommendations for consideration by the Pacific Council at its November meeting in Costa Mesa, CA.

Although non-emergency issues not contained in the meeting agenda may arise during the workshop, those issues may not be the subject of formal action during this meeting. Final workshop recommendations will be restricted to those issues specifically listed in this notice and any issues arising after publication of this notice that require emergency action under section 305(c) of the Magnuson-Stevens Fishery Conservation and Management Act, provided the public has been notified of the intent to take final action to address the emergency.

Special Accommodations

This meeting is physically accessible to people with disabilities. Requests for sign language interpretation or other auxiliary aids should be directed to Mr. Kris Kleinschmidt at (503) 820–2280 at least 5 days prior to the meeting date.

Dated: July 23, 2012.

Tracey L. Thompson,

Acting Deputy Director, Office of Sustainable Fisheries, National Marine Fisheries Service.

[FR Doc. 2012–18255 Filed 7–25–12; 8:45 am]

BILLING CODE 3510–22–P

DEPARTMENT OF COMMERCE

National Oceanic and Atmospheric Administration

RIN 0648–XC123

Advisory Committee to the U.S. Section of the International Commission for the Conservation of Atlantic Tunas (ICCAT); Fall Meeting

AGENCY: National Marine Fisheries Service (NMFS), National Oceanic and Atmospheric Administration (NOAA), Commerce.

ACTION: Notice of public meeting.

SUMMARY: In preparation for the 2012 International Commission for the Conservation of Atlantic Tunas (ICCAT) meeting, the Advisory Committee to the U.S. Section to ICCAT is announcing the convening of its fall meeting.

DATES: The meeting will be held October 17–18, 2012. There will be an open session on Wednesday, October 17, 2012, from 9 a.m. through approximately 1:30 p.m. The remainder of the meeting will be closed to the public and is expected to end by 5 p.m. on October 18. Interested members of the public may present their views during the public comment session on October 17, 2012.

ADDRESSES: The meeting will be held at the DoubleTree/Hilton Hotel, 8727 Colesville Road, Silver Spring, MD 20910. Written comments should be sent via email (*Rachel.O'Malley@noaa.gov*). Comments may also be sent via mail to Rachel O'Malley at NMFS, Office of International Affairs, Room 12622, 1315 East-West Highway, Silver Spring, MD 20910.

FOR FURTHER INFORMATION CONTACT: Rachel O'Malley, Office of International Affairs, 301–427–8373.

SUPPLEMENTARY INFORMATION: The Advisory Committee to the U.S. Section to ICCAT will meet October 17–18, 2012, first in an open session to consider management- and research-related information on stock status of Atlantic highly migratory species and then in a closed session to discuss sensitive matters. There will be an opportunity for oral public comment during the October 17, 2012, open session. The open session will be from 9 a.m. through 1:30 p.m. The public comment portion of the meeting is scheduled to begin at approximately 1 p.m. but could begin earlier depending on the progress of discussions. Comments may also be submitted in writing for the Advisory Committee's consideration. Interested members of the public can submit comments by mail or email; use of email is encouraged. All written comments must be received by October 5, 2012 (see **ADDRESSES**).

NMFS expects members of the public to conduct themselves appropriately at the open session of the meeting. At the beginning of the public comment session, an explanation of the ground rules will be provided (e.g., alcohol in the meeting room is prohibited, speakers will be called to give their comments in the order in which they registered to speak, each speaker will have an equal amount of time to speak and speakers should not interrupt one another). The session will be structured so that all attending members of the public are able to comment, if they so choose, regardless of the degree of controversy of the subject(s). Those not respecting the ground rules will be asked to leave the meeting.

After the open session, the Advisory Committee will meet in closed session to discuss sensitive information relating to upcoming international negotiations regarding the conservation and management of Atlantic highly migratory species.

Special Accommodations

The meeting location is physically accessible to people with disabilities. Requests for sign language interpretation or other auxiliary aids should be directed to Rachel O'Malley at (301) 427–8373 or *Rachel.O'Malley@noaa.gov* at least 5 days prior to the meeting date.

Dated: July 20, 2012.

Christopher Rogers,

Acting Director, Office of International Affairs, National Marine Fisheries Service.

[FR Doc. 2012–18299 Filed 7–25–12; 8:45 am]

BILLING CODE 3510–22–P

CONSUMER PRODUCT SAFETY COMMISSION

Submission for OMB Review; Comment Request—Safety Standards for Full-Size Baby Cribs and Non-Full-Size Baby Cribs; Compliance Form

AGENCY: Consumer Product Safety Commission.

ACTION: Notice.

SUMMARY: The Consumer Product Safety Commission (CPSC or Commission) announces that it has submitted to the Office of Management and Budget (OMB) a proposed collection of information for review and clearance under the Paperwork Reduction Act of 1995 (44 U.S.C. Chapter 35). This collection of information relates to a form that will be used to measure child care centers' compliance with the recent CPSC safety standards for full-size and non-full-size cribs.

DATES: Fax written comments on the collection of information by August 27, 2012.

ADDRESSES: To ensure that comments on the information collection are received, OMB recommends that written comments be faxed to the Office of Information and Regulatory Affairs, OMB, Attn: CPSC Desk Officer, FAX: 202–395–6974, or emailed to *oira_submission@omb.eop.gov*. All comments should be identified by Docket No. CPSC–2012–0019. In addition, written comments should be submitted to *http://www.regulations.gov,* under Docket No. CPSC–2010–0088, or by mail/hand delivery/courier (for paper, disk, or CD–ROM submissions), preferably in five copies, to: Office of the Secretary, U.S. Consumer Product Safety Commission, Room 820, 4330 East West Highway, Bethesda, MD 20814; telephone (301) 504–7923. For access to the docket to read background documents or comments received, go to: *http://www.regulations.gov*. A copy of the draft survey is available at: *http://www.regulations.gov,* under Docket No. CPSC–2012–0019, Supporting and Related Materials.

FOR FURTHER INFORMATION CONTACT: For information about the proposed collection of information call or write Mary James, Office of Information and Technology Services, Consumer Product Safety Commission, 4330 East West Highway, Bethesda, MD 20814; (301) 504–7213, or by email to: *mjames@cpsc.gov*.

SUPPLEMENTARY INFORMATION: In compliance with 44 U.S.C 3507, the CPSC has submitted a proposed collection of information to OMB for review and clearance of a form that CPSC staff intends to use when visiting child care centers to gauge compliance with the CPSC's crib safety standards. On December 28, 2010, we issued a final rule establishing safety standards for full-size and non-full-size baby cribs in response to the direction under section 104(b) of the Consumer Product Safety Improvement Act (CPSIA) (75 FR 81766). Section 104(c) of the CPSIA specifies that the crib standards apply to anyone who manufactures, distributes, or contracts to sell a crib; to child care facilities, and others holding themselves out to be knowledgeable about cribs; to anyone who leases, sublets, or otherwise places a crib in the stream of commerce; and to owners and operators of places of public accommodation affecting commerce.

The CPSC is seeking OMB approval of a ''Verification of Compliance Form'' that CPSC staff intends to use when visiting child care centers to measure compliance with the crib safety standards. CPSC investigators or designated state or local government officials will use the form, which will be filled out entirely at the site during the normal course of the visit. The Commission intends to use the information to measure compliance with the crib safety standards and to develop an enforcement strategy. We intend to begin with a pilot program in 2012, which would involve conducting visits to approximately 70 child care centers in seven states. Depending on the results of the pilot program, we would expand the program in 2013, although expansion of the program's size would depend upon the availability of CPSC resources.

In the **Federal Register** of April 16, 2012 (77 FR 22564), we published a notice announcing the CPSC's intention to seek approval of a collection of information related to the CPSC's safety standards for cribs. We received 23 comments in response to the notice. Most comments discussed the crib standards generally, but did not address issues related to this collection of information. Two discussed the accuracy of our estimates or the burden of the proposed collection of information. Both of these commenters stated that 15 minutes may not be sufficient when identifying how long these inspections will take to perform. CPSC staff believes that, while some inspections may take longer than 15 minutes, some will also take less time to conduct. CPSC staff considers the 15 minutes an appropriate estimate of the average length of time for inspection under this program. One comment provided suggestions for the pilot program and its documentation. However, we believe that the form requests all of the applicable information needed to gauge crib compliance.

We estimate the burden of this collection of information as follows: The CPSC estimates that there may be approximately 70 inspections during the pilot program in 2012. Because the investigators will be talking to the child care facility staff at the time of the inspection and asking questions to help complete the form, CPSC staff estimates that the burden hours for child care facility staff to respond to the questions will be approximately a quarter of an hour, per inspection. Thus, the estimated total annual burden hours for respondents are approximately 17.5 hours (70 inspections × a quarter of an hour per inspection). CPSC staff estimates that the annualized cost to all respondents is approximately $383.43, based on an hourly wage of $21.91 per hour ($21.91 × 17.5). (Bureau of Labor Statistics (BLS), total compensation for all workers, sales and office for service-producing industries, Employer Costs for Employee Compensation Table 9, September 2011).

CPSC staff estimates that it will take an average of a quarter of an hour to review the information collected. The annual cost to the federal government of the collection of information in these regulations is estimated to be $704.26. This is based on an average wage rate of $28.13 (the equivalent of a GS–9 Step 5 employee). This represents 69.9 percent of total compensation (Bureau of Labor Statistics, September 2011, percentage

wages and salaries for all civilian management, professional, and related employees, Table 1). Adding an additional 30.1 percent for benefits brings the average hourly compensation for a GS–9 Step 5 employee to $40.24. Thus, 35 hours for conducting and reviewing (17.5 hours plus 17.5 hours) the information multiplied against an hourly compensation figure of $40.24 results in an estimated cost to the government of $1,408.40.

Dated: July 23, 2012.

Todd A. Stevenson,

Secretary, Consumer Product Safety Commission.

[FR Doc. 2012–18236 Filed 7–25–12; 8:45 am]

BILLING CODE 6355–01–P

CORPORATION FOR NATIONAL AND COMMUNITY SERVICE

Information Collection; Submission for OMB Review, Comment Request

AGENCY: Corporation for National and Community Service.

ACTION: Notice.

SUMMARY: The Corporation for National and Community Service (CNCS) has submitted a public information collection request (ICR) entitled VISTA Training Evaluation for review and approval in accordance with the Paperwork Reduction Act of 1995, Public Law 104–13, (44 U.S.C. chapter 35). Copies of this ICR, with applicable supporting documentation, may be obtained by calling the Corporation for National and Community Service, Craig Kinnear, at (202) 606–6708 or email to *ckinnear@cns.gov*. Individuals who use a telecommunications device for the deaf (TTY–TDD) may call 1–800–833–3722 between 8:00 a.m. and 8:00 p.m. Eastern Time, Monday through Friday.

ADDRESSES: Comments may be submitted, identified by the title of the information collection activity, to the Office of Information and Regulatory Affairs, Attn: Ms. Sharon Mar, OMB Desk Officer for the Corporation for National and Community Service, by any of the following two methods within 30 days from the date of publication in the **Federal Register**:

(1) *By fax to:* (202) 395–6974, Attention: Ms. Sharon Mar, OMB Desk Officer for the Corporation for National and Community Service; and

(2) *Electronically by email to: smar@omb.eop.gov.*

SUPPLEMENTARY INFORMATION: The OMB is particularly interested in comments which:

- Evaluate whether the proposed collection of information is necessary for the proper performance of the functions of CNCS, including whether the information will have practical utility;
- Evaluate the accuracy of the agency's estimate of the burden of the proposed collection of information, including the validity of the methodology and assumptions used;
- Propose ways to enhance the quality, utility, and clarity of the information to be collected; and
- Propose ways to minimize the burden of the collection of information on those who are to respond, including through the use of appropriate automated, electronic, mechanical, or other technological collection techniques or other forms of information technology, e.g., permitting electronic submissions of responses.

Comments

A 60-day public comment Notice was published in the **Federal Register** on April 17, 2012. This comment period ended June 18, 2012. One public comment was received from this Notice, questioning why this information was not already available to CNCS staff. Our response is that the information being collected is more detailed than what has previously been collected regarding VISTA training.

Description: CNCS is seeking approval of the VISTA Training Evaluation instruments, which are used by staff to improve the efficiencies and effectiveness of VISTA Training.

Type of Review: New.

Agency: Corporation for National and Community Service.

Title: VISTA Training Evaluation.

OMB Number: None.

Agency Number: None.

Affected Public: VISTA Alumni & VISTA Project Sponsors.

Total Respondents: 635.

Frequency: Once.

Average Time per Response: 30 minutes.

Estimated Total Burden Hours: 317.5.

Total Burden Cost (capital/startup): None.

Total Burden Cost (operating/maintenance): None.

Dated: July 20, 2012.

Paul Davis,

Director of Program Development, AmeriCorps VISTA.

[FR Doc. 2012–18196 Filed 7–25–12; 8:45 am]

BILLING CODE 6050–$$–P

CORPORATION FOR NATIONAL AND COMMUNITY SERVICE

Information Collection; Submission for OMB Review, Comment Request

AGENCY: Corporation for National and Community Service.

ACTION: Notice.

SUMMARY: The Corporation for National and Community Service (CNCS) has submitted a public information collection request (ICR) entitled National Evaluation of the Social Innovation Fund for review and approval in accordance with the Paperwork Reduction Act of 1995, Public Law 104–13, (44 U.S.C. Chapter 35). Copies of this ICR, with applicable supporting documentation, may be obtained by calling the Corporation for National and Community Service, Joscelyn Silsby, at (202) 606–3464 or email to *jsilsby@cns.gov.* Individuals who use a telecommunications device for the deaf (TTY–TDD) may call 1–800–833–3722 between 8:00 a.m. and 8:00 p.m. Eastern Time, Monday through Friday.

ADDRESSES: Comments may be submitted, identified by the title of the information collection activity, to the Office of Information and Regulatory Affairs, Attn: Ms. Sharon Mar, OMB Desk Officer for the Corporation for National and Community Service, by any of the following two methods within 30 days from the date of publication in the **Federal Register**:

(1) *By fax to:* (202) 395–6974, Attention: Ms. Sharon Mar, OMB Desk Officer for the Corporation for National and Community Service; and

(2) *Electronically by email to: smar@omb.eop.gov.*

SUPPLEMENTARY INFORMATION: The OMB is particularly interested in comments which:

- Evaluate whether the proposed collection of information is necessary for the proper performance of the functions of CNCS, including whether the information will have practical utility;
- Evaluate the accuracy of the agency's estimate of the burden of the proposed collection of information, including the validity of the methodology and assumptions used;
- Enhance the quality, utility, and clarity of the information to be collected; and
- Minimize the burden of the collection of information on those who are to respond, including through the use of appropriate automated, electronic, mechanical, or other

technological collection techniques or other forms of information technology, e.g., permitting electronic submissions of responses.

Comments

A 60-day public comment Notice was published in the **Federal Register** on May 22, 2012. This comment period ended July 21, 2012. No public comments were received from this Notice.

Description: CNCS is seeking approval for an annual program activity data collection form, a follow-up interview with subgrantees, semi-structured discussion guide with intermediaries, and discussion guides for SIF program directors, subgrantee executive directors, subgrantee evaluators and stakeholders that will form case studies. Intermediaries will use the annual program activity data collection form to provide data on the 138 subgrantees to document the changes in outputs and outcomes that occur as a result of SIF, beginning in the fall of 2012. This will be an annual data collection and will be conducted in 2013, 2014, and 2015. A follow-up interview of the 138 subgrantees is to obtain contextual and explanatory information (clarification of the data received from the annual program activity data collection). This data collection will occur in 2012, 2013, and 2015. Discussion guides will be used to (1) conduct in-depth discussions with 11 intermediaries in 2013 (to understand the strategies in place for scaling, replicating and/or expanding evidence based program models and how evidence was used to influence expansion; and (2) conducting in-person discussions with 15 subgrantee SIF program directors, subgrantee executive directors, and subgrantee evaluators, and stakeholders to document the extent to which expanded programs adhere to the original program model and understand how different program expansion strategies may be categorized.

Type of Review: New.

Agency: Corporation for National and Community Service.

Title: National Evaluation of the Social Innovation Fund.

OMB Number: TBD.

Agency Number: None.

Affected Public: The affected public will be the intermediaries who received funding from CNCS and the subgrantees who received SIF funding from the intermediaries stakeholders (representatives from partnering organizations, volunteers, and the local evaluator).

Total Respondents: 362.

Frequency: The annual program activity data collection instrument will be completed once annually during 2012, 2013, 2014, and 2015. Follow-up interviews with subgrantees will occur in 2012, 2013, and 2015. In-depth discussions with intermediaries will occur in 2013. Site visits and discussions will occur once in 2013 with approximately 15 subgrantees (SIF program director, subgrantee executive director and subgrantee evaluator), and stakeholders to develop case studies focused on program expansion strategies and capacity strengthening work.

Average Time per Response: Average response time of the 11 grantees to compile the data for each sub grantee for the annual program activity data collection instrument will be 3 hours per subgrantee (total 414 hours). The follow-up interview with subgrantees will be an average of 30 minutes (total 69 hours). Discussions with SIF intermediaries will take an average of 1.0 hour (total 11 hours). And the discussions with SIF Program directors, subgrantee executive directors, subgrantee evaluators, and stakeholders for the case studies will be an average of 1 hour per respondent (total 75 hours).

Estimated Total Burden Hours: 569 hours.

Total Burden Cost (Capital/Startup): None.

Total Burden Cost (Operating/Maintenance): None.

Dated: July 20, 2012.

Christopher Spera,

Director of Research and Evaluation.

[FR Doc. 2012–18193 Filed 7–25–12; 8:45 am]

BILLING CODE 6050–$$–P

CORPORATION FOR NATIONAL AND COMMUNITY SERVICE

Information Collection; Submission for OMB Review, Comment Request

AGENCY: Corporation for National and Community Service.

ACTION: Notice.

SUMMARY: The Corporation for National and Community Service (CNCS) has submitted a public information collection request (ICR) entitled VISTA Progress Report Supplement for review and approval in accordance with the Paperwork Reduction Act of 1995, Public Law 104–13, (44 U.S.C. Chapter 35). Copies of this ICR, with applicable supporting documentation, may be obtained by calling the Corporation for National and Community Service, Kelly Daly, at (202) 606–6849 or email to *vista@americorps.gov*. Individuals who use a telecommunications device for the deaf (TTY–TDD) may call 1–800–833–3722 between 8:00 a.m. and 8:00 p.m. Eastern Time, Monday through Friday.

ADDRESSES: Comments may be submitted, identified by the title of the information collection activity, to the Office of Information and Regulatory Affairs, Attn: Ms. Sharon Mar, OMB Desk Officer for the Corporation for National and Community Service, by any of the following two methods within 30 days from the date of publication in the **Federal Register**:

(1) *By fax to:* (202) 395–6974, Attention: Ms. Sharon Mar, OMB Desk Officer for the Corporation for National and Community Service; and

(2) *Electronically by email to: smar@omb.eop.gov*.

SUPPLEMENTARY INFORMATION: The OMB is particularly interested in comments which:

- Evaluate whether the proposed collection of information is necessary for the proper performance of the functions of CNCS, including whether the information will have practical utility;
- Evaluate the accuracy of the agency's estimate of the burden of the proposed collection of information, including the validity of the methodology and assumptions used;
- Propose ways to enhance the quality, utility, and clarity of the information to be collected; and
- Propose ways to minimize the burden of the collection of information on those who are to respond, including through the use of appropriate automated, electronic, mechanical, or other technological collection techniques or other forms of information technology, e.g., permitting electronic submissions of responses.

Comments

A 60-day public comment Notice was published in the **Federal Register** on May 1, 2012. This comment period ended July 2, 2012. No public comments were received from this Notice.

Description: CNCS is seeking approval of its VISTA Progress Report Supplement (VPRS) which is used by AmeriCorps VISTA project sponsor to report on program-wide performance measurements.

Type of Review: Revision.

Agency: Corporation for National and Community Service.

Title: VISTA Progress Report Supplement.

OMB Number: OMB Control Number 3045–0048.

Agency Number: None.

Affected Public: AmeriCorps VISTA Project Sponsors.

Total Respondents: 900.

Frequency: Annual.

Average Time per Response: 8 hours.

Estimated Total Burden Hours: 7200 hours.

Total Burden Cost (capital/startup): None.

Total Burden Cost (operating/maintenance): None.

Dated: July 19, 2012.

Mary Strasser,

Director, AmeriCorps VISTA.

[FR Doc. 2012–18197 Filed 7–25–12; 8:45 am]

BILLING CODE 6050–$$–P

DEPARTMENT OF DEFENSE

Office of the Secretary

[Docket No. DOD–2012–DARS–0087]

Submission for OMB Review; Comment Request

ACTION: Notice.

The Department of Defense has submitted to OMB for clearance, the following proposal for collection of information under the provisions of the Paperwork Reduction Act (44 U.S.C. Chapter 35).

DATES: Consideration will be given to all comments received by August 27, 2012.

Title, Associated Forms and OMB Number: Defense Federal Acquisition Regulation Supplement (DFARS) Part 236, Construction and Architect-Engineer Contracts, and Related Clauses at DFARS 252.236; OMB Control Number 0704–0225.

Type of Request: Reinstatement.

Number of Respondents: 3587.

Responses per Respondent: 1.

Annual Responses: 3587.

Average Burden per Response: 100.008 hours.

Annual Burden Hours: 359,015 hours.

Needs and Uses: DoD contracting officers need this information to evaluate contractors proposals for contract modification; to determine that a contractor has removed obstructions to navigation; to review contractor requests for payment for mobilization and preparatory work; to determine reasonableness of costs allocated to mobilization and demobilization; and to determine eligibility for the 20 percent evaluation preference for United States firms in the award of some overseas construction contracts.

Affected Public: Business or other for-profit; not-for-profit institutions.

Frequency: On occasion.

Respondent's Obligation: Required to obtain or retain benefits.

OMB Desk Officer: Ms. Jasmeet Seehra.

Written comments and recommendations on the proposed information collection should be sent to Ms. Seehra at the Office of Management and Budget, Desk Officer for DoD, Room 10236, New Executive Office Building, Washington, DC 20503.

You may also submit comments, identified by docket number and title, by the following method:

• *Federal eRulemaking Portal: http://www.regulations.gov.* Follow the instructions for submitting comments.

Instructions: All submissions received must include the agency name, docket number and title for this **Federal Register** document. The general policy for comments and other submissions from members of the public is to make these submissions available for public viewing on the Internet at *http://www.regulations.gov* as they are received without change, including any personal identifiers or contact information.

DOD Clearance Officer: Ms. Patricia Toppings.

Written requests for copies of the information collection proposal should be sent to Ms. Toppings at WHS/ESD Information Management Division, 4800 Mark Center Drive, East Tower, Suite 02G09, Alexandria, VA 22350–3100.

Dated: July 13, 2012.

Patricia L. Toppings,

OSD Federal Register Liaison Officer, Department of Defense.

[FR Doc. 2012–18230 Filed 7–25–12; 8:45 am]

BILLING CODE 5001–06–P

DEPARTMENT OF DEFENSE

Office of the Secretary

[Docket ID: DOD–2012–OS–0088]

Privacy Act of 1974; System of Records

AGENCY: Defense Intelligence Agency, DoD.

ACTION: Notice to alter a System of Records.

SUMMARY: The Defense Intelligence Agency is proposing to alter a system in its existing inventory of records systems subject to the Privacy Act of 1974 (5 U.S.C. 552a), as amended. The blanket (k)(1) exemption applies to this systems of records to accurately describe the basis for exempting disclosure of classified information that is or may be contained in the records.

DATES: This proposed action will be effective further notice on August 27, 2012 unless comments are received which in a contrary determination.

ADDRESSES: You may submit comments, identified by docket number and title, by any of the following methods:

* *Federal Rulemaking Portal: http://www.regulations.gov.* Follow the instructions for submitting comments.

* *Mail:* Federal Docket Management System Office, 4800 Mark Center Drive; East Tower, 2nd Floor, Suite 02G09, Alexandria, VA 22350–3100.

Instructions: All submissions received must include the agency name and docket number for this **Federal Register** document. The general policy for comments and other submissions from members of the public is to make these submissions available for public viewing on the Internet at *http://www.regulations.gov* as they are received without change, including any personal identifiers or contact information.

FOR FURTHER INFORMATION CONTACT: Ms. Theresa Lowery at Defense Intelligence Agency, DAN 1–C, 600 MacDill Blvd., Washington, DC 20340–0001 or by phone at (202) 231–1193.

SUPPLEMENTARY INFORMATION: The Defense Intelligence Agency system of records notices subject to the Privacy Act of 1974 (5 U.S.C. 552a), as amended, have been published in the **Federal Register** and are available from the address in **FOR FURTHER INFORMATION CONTACT**. The proposed system report, as required by 5 U.S.C. 552a of the Privacy Act of 1974, as amended, was submitted on July 10, 2012, to the House Committee on Oversight and Government Reform, the Senate Committee on Governmental Affairs, and the, the Office of Management and Budget (OMB) pursuant to paragraph 4c of Appendix I to OMB Circular No. A–130, ''Federal Agency Responsibilities for Maintaining Records About Individuals,'' dated February 8, 1996 (February 20, 1996, 61 FR 6427).

Dated: July 23, 2012.

Aaron Siegel,

Alternate OSD Federal Register Liaison Officer, Department of Defense.

LDIA 10–0002

Foreign Intelligence and Counterintelligence Operation Records (June 15, 2010, 75 FR 33791)

CHANGES:

* * * * *

SYSTEM LOCATION:

Delete entry and replace with ''Defense Intelligence Agency, 200 MacDill Blvd., Washington, DC 20340–0001.''

* * * * *

CATEGORIES OF RECORDS IN THE SYSTEM:

Delete entry and replace with ''Categories of records include identifying information such as name, Social Security Number (SSN), address, citizenship documentation, biometric data, passport number, vehicle identification number, and vehicle/vessel license data. Records relating to the management and coordination of DoD counterintelligence systems and activities. Records relating to analytical, operational, biographic, policy, management, training, administrative matters and operational support related to DoD counterintelligence, force protection, critical infrastructure protection, research and technology protection, threat analysis, counter-narcotics and risk assessments. Records relating to the architecture and operation of DoD counterintelligence information systems. Reports of investigation, collection, statements of individuals, affidavits, correspondence, and other documentation pertaining to investigative or analytical efforts by DoD and other U.S. government agencies to identify or counter foreign intelligence and terrorist threats to the DoD and the United States. The system of records includes ad hoc or temporary databases established to support particular investigations, task forces, or analytical projects.''

* * * * *

SYSTEM MANAGER(S) TITLE AND ADDRESS:

Delete entry and replace with ''Public Affairs Officer, Office for Congressional and Public Affairs, Defense Intelligence Agency, 200 MacDill Blvd., Washington DC 20340–0001.''

NOTIFICATION PROCEDURE:

Delete entry and replace with ''Individuals seeking to determine whether information about themselves is contained in this system of records should address written inquiries to the DIA Freedom of Information Act Office (DAN–1A), Defense Intelligence Agency, 200 MacDill Blvd., Washington, DC 20340–0001.

Request should contain the individual's full name, current address, and telephone number.''

RECORD ACCESS PROCEDURE:

Delete entry and replace with ''Individuals seeking access to information about themselves contained in this system of records should address written inquiries to the DIA Freedom of Information Act Office, Defense Intelligence Agency (DAN–1A), 200 MacDill Blvd., Washington, DC 20340–0001.

Request should contain the individual's full name, current address, and telephone number.''

* * * * *

[FR Doc. 2012–18258 Filed 7–25–12; 8:45 am]

BILLING CODE 5001–06–P

DEPARTMENT OF DEFENSE

Department of the Air Force

[Docket ID USAF–2012–0013]

Privacy Act of 1974; System of Records

AGENCY: Department of the Air Force, DoD.

ACTION: Notice to alter a system of records.

SUMMARY: The Department of the Air Force proposes to alter a system of records notice in its existing inventory of records systems subject to the Privacy Act of 1974 (5 U.S.C. 552a), as amended. The blanket (k)(1) exemption applies to this systems of records to accurately describe the basis for exempting disclosure of classified information that is or may be contained in the records.

DATES: This proposed action will be effective on August 27, 2012 unless comments are received which result in a contrary determination.

ADDRESSES: You may submit comments, identified by docket number and title, by any of the following methods:

* *Federal Rulemaking Portal: http://www.regulations.gov.* Follow the instructions for submitting comments.

* *Mail:* Federal Docket Management System Office, 4800 Mark Center Drive, East Tower, 2nd Floor, Suite 02G09, Alexandria, VA 22350–3100.

Instructions: All submissions received must include the agency name and docket number for this **Federal Register** document. The general policy for comments and other submissions from members of the public is to make these submissions available for public viewing on the Internet at *http://www.regulations.gov* as they are received without change, including any personal identifiers or contact information.

FOR FURTHER INFORMATION CONTACT: Mr. Charles J. Shedrick, Department of the Air Force Privacy Office, Air Force Privacy Act Office, Office of Warfighting Integration and Chief Information officer, Attn: SAF/CIO A6, 1800 Air Force Pentagon, Washington, DC 20330–1800, or by phone at (202) 404–6575.

SUPPLEMENTARY INFORMATION: The Department of the Air Force's notices for systems of records subject to the Privacy Act of 1974 (5 U.S.C. 552a), as amended, have been published in the **Federal Register** and are available from the address in **FOR FURTHER INFORMATION CONTACT**. The proposed systems reports, as required by 5 U.S.C. 552a(r) of the Privacy Act, were submitted on July 10, 2012 to the House Committee on Oversight and Government Reform, the Senate Committee on Homeland Security and Governmental Affairs, and the Office of Management and Budget (OMB) pursuant to paragraph 4c of Appendix I to OMB Circular No. A–130, ''Federal Agency Responsibilities for Maintaining Records About Individuals,'' dated February 8, 1996, (February 20, 1996, 61 FR 6427).

Dated: July 23, 2012.

Aaron Siegel,

Alternate OSD Federal Register Liaison Officer, Department of Defense.

F036 AF PC F

SYSTEM NAME:

Request for Selective Reenlistment Bonus (SRB) and/or Advance Payment of SRB (June 11, 1997, 62 FR 31793).

CHANGES:

SYSTEM IDENTIFIER:

Delete entry and replace with ''F036 AFPC D''.

SYSTEM NAME:

Delete entry and replace with ''Selective Reenlistment Bonus and/or Advance Payment Request.''

* * * * *

SYSTEM LOCATION:

Delete entry and replace with ''Headquarters Air Force Personnel Center, 550 C Street West, Randolph Air Force Base, TX 78150–4712 and at Military Personnel Sections at Air Force Installations. Official mailing addresses are published as an appendix to the Air Force's compilation of system of records.''

CATEGORIES OF INDIVIDUALS COVERED BY THE SYSTEM:

Delete entry and replace with ''Air Force active duty enlisted personnel.''

* * * * *

AUTHORITY FOR MAINTENANCE OF THE SYSTEM:

Delete entry and replace with ''10 U.S.C. 8013, Secretary of Air Force; 37 U.S.C. 308, Special pay: Reenlistment bonus; Air Force Instruction 36–2606, Reenlistment in the United States Air Force; and E.O. 9397 (SSN), as amended.''

PURPOSE(S):

Delete entry and replace with ''To manage advance payment of Selective

Reenlistment Bonus monies due to qualifying Air Force enlisted personnel in subsequent fiscal years.''

* * * * *

STORAGE:

Delete entry and replace with ''Maintained electronically or in visible file binders/cabinets.''

RETRIEVABILITY:

Delete entry and replace with ''Retrieved by name and or SSN''.

SAFEGUARDS:

Delete entry and replace with ''Records are accessed by custodian of the record system and by person(s) responsible for servicing the record system in the performance of their official duties and who are properly screened and cleared for need-to-know. Records are stored electronically or in locked cabinets or rooms. Records are controlled by personnel screening visitor registers, computer system software, and Common Access Card (CAC) access, passwords, and encryption.''

* * * * *

SYSTEM MANAGER(S) AND ADDRESS:

Delete entry and replace with ''Skills Management Branch, (HQ AFPC/DPSOA), Headquarters Air Force Personnel Center, 550 C Street West, Suite 10, Randolph Air Force Base, TX 78150–4712.''

NOTIFICATION PROCEDURES:

Delete entry and replace with ''Individuals seeking to determine whether information about themselves is contained in this system should address written inquiries to the Headquarters Air Force Personnel Center, 550 C Street West, Randolph Air Force Base, TX 78150–4712 and at Military Personnel Sections at Air Force Installations. Official mailing addresses are published as an appendix to the Air Force's compilation of system of records.

For verification purposes, individual should provide their full name, Social Security Number (SSN), any details which may assist in locating records, and their signature.

In addition, the requester must provide a notarized statement or an unsworn declaration made in accordance with 28 U.S.C. 1746, in the following format:

If executed outside the United States:

'I declare (or certify, verify, or state) under penalty of perjury under the laws of the United States of America that the foregoing is true and correct. Executed on (date). (Signature)'.

If executed within the United States, its territories, possessions, or commonwealths: 'I declare (or certify, verify, or state) under penalty of perjury that the foregoing is true and correct. Executed on (date). (Signature)'.''

RECORDS ACCESS PROCEDURES:

Delete entry and replace with ''Individuals seeking access to information about themselves contained in this system should address written inquiries to the Headquarters Air Force Personnel Center, 550 C Street West, Randolph Air Force Base, TX 78150–4712 and at Military Personnel Sections at Air Force Installations. Official mailing addresses are published as an appendix to the Air Force's compilation of system of records

For verification purposes, individual should provide their full name, Social Security Number (SSN), any details which may assist in locating records, and their signature.

In addition, the requester must provide a notarized statement or an unsworn declaration made in accordance with 28 U.S.C. 1746, in the following format:

If executed outside the United States:

'I declare (or certify, verify, or state) under penalty of perjury under the laws of the United States of America that the foregoing is true and correct. Executed on (date). (Signature)'.

If executed within the United States, its territories, possessions, or commonwealths: 'I declare (or certify, verify, or state) under penalty of perjury that the foregoing is true and correct. Executed on (date). (Signature)'.''

CONTESTING RECORD PROCEDURES:

Delete entry and replace with ''The Air Force rules for accessing records, and for contesting contents and appealing initial agency determinations are published in Air Force Instruction 33–332, Air Force Privacy Act Program; Member should refer to Air Force Instruction 36–2607, Applicants' Guide to the Air Force Board for Correction of Military Records (AFBCMR) for contesting contents and appealing initial agency under 32 CFR part 806b.''

* * * * *

[FR Doc. 2012–18259 Filed 7–25–12; 8:45 am]

BILLING CODE 5001–06–P

DEPARTMENT OF DEFENSE

Department of the Air Force

[Docket ID: USAF–2012–0012]

Privacy Act of 1974; System of Records

AGENCY: Department of the Air Force, DoD.

ACTION: Notice to alter a system of records.

SUMMARY: The Department of the Air Force proposes to alter a system of records in its inventory of record systems subject to the Privacy Act of 1974 (5 U.S.C. 552a), as amended. The blanket (k)(1) exemption applies to this systems of records to accurately describe the basis for exempting disclosure of classified information that is or may be contained in the records.

DATES: The proposed action will be effective on August 27, 2012 unless comments are received which result in a contrary determination.

ADDRESSES: You may submit comments, identified by docket number and title, by any of the following methods:

* *Federal Rulemaking Portal: http://www.regulations.gov.* Follow the instructions for submitting comments.

* *Mail:* Federal Docket Management System Office, 4800 Mark Center Drive, East Tower, 2nd Suite 02G09, Alexandria, VA 22350–3100.

Instructions: All submissions received must include the agency name and docket number for this **Federal Register** document. The general policy for comments and other submissions from members of the public is to make these submissions available for public viewing on the Internet at *http://www.regulations.gov* as they are received without change, including any personal identifiers or contact information.

FOR FURTHER INFORMATION CONTACT: Mr. Charles J. Shedrick, Department of the Air Force Privacy Office, Air Force Privacy Act Office, Office of Warfighting Integration and Chief Information officer, ATTN: SAF/CIO A6, 1800 Air Force Pentagon, Washington, DC 20330–1800, or by phone at (202) 404–6575.

SUPPLEMENTARY INFORMATION: The Department of the Air Force's notices for systems of records subject to the Privacy Act of 1974 (5 U.S.C. 552a), as amended, have been published in the **Federal Register** and are available from the address in **FOR FURTHER INFORMATION CONTACT**. The proposed systems reports, as required by 5 U.S.C. 552a(r) of the Privacy Act, as amended, were submitted on July 12, 2012 to the House

Committee on Oversight and Government Reform, the Senate Committee on Homeland Security and Governmental Affairs, and the Office of Management and Budget (OMB) pursuant to paragraph 4c of Appendix I to OMB Circular No. A–130, ''Federal Agency Responsibilities for Maintaining Records About Individuals,'' dated February 8, 1996, (February 20, 1996, 61 FR 6427).

Dated: July 23, 2012.

Aaron Siegel,

Alternate OSD Federal Register Liaison Officer, Department of Defense.

F033 AFCA C

SYSTEM NAME:

USAF Information Technology E-Learning System (December 8, 2008, 73 FR 74471).

* * * * *

CHANGES:

SYSTEM ID:

Delete entry and replace with ''F033 AFSPC C''.

SYSTEM NAME:

Delete entry and replace with ''AF e-Learning System.''

SYSTEM LOCATION:

Delete entry and replace with ''Sunguard; 20 Overland Street, Suite A, Boston, MA 02215–3339.''

CATEGORIES OF INDIVIDUALS COVERED BY THE SYSTEM:

Delete entry and replace with ''Active duty Air Force military personnel, Air National Guard, Air Force Reserves, Air Force civilian personnel, and contractors.''

CATEGORIES OF RECORDS IN THE SYSTEM:

Delete entry and replace with ''Individual's full name, address, telephone number, DoD ID Number, AF Portal ID, student registrations and history of learning assets (courses, test preparations, mentoring, books, skill briefs) accessed and completed and other related documents.''

AUTHORITY FOR MAINTENANCE OF THE SYSTEM:

Delete entry and replace with ''10 U.S.C. 8013, Secretary of the Air Force; DoD 8570.01–M, Information Assurance Workforce Improvement Program; and Air Force Instruction 33–115, Volume 2, Licensing Network Users and Certifying Network.''

PURPOSE(S):

Delete entry and replace with ''Provides interactive, self-paced, web-based training and reference material anytime, anywhere to user desktops to keep Air Force personnel skilled in the technology and knowledge they need to carry out their missions. It is used as a management tool in support of Air Force information technology training requirements.''

* * * * *

RETRIEVABILITY:

Delete entry and replace with ''By individual's full name and/or DoD ID Number.''

SAFEGUARDS:

Delete entry and replace with ''Access to the system is restricted through the Air Force Portal reduced sign-on capability. AF e-Learning can only be accessed through the Air Force Portal. Air Force and contract personnel responsible for servicing the record system in performance of their official duties may only access the system by using a unique user name and password. The system is protected by audit logs, virus detection, intrusion detection, firewalls, and encryption of data in transmission. The data center where system area network resides has onsite personnel 24 hours daily; electronic and physical security, video surveillance, and badge-only access. Student data is encrypted from originating source to the system.''

RETENTION AND DISPOSAL:

Delete entry and replace with ''Retain file for 10 years after individual completes or discontinues a training course, then destroy.''

SYSTEM MANAGER(S) AND ADDRESS:

Delete entry and replace with ''Cyberspace Support Squadron, Training Flight (CYSS/DOT), Attn: Program Manager, Room 2100, 203 West Losey Street, Scott AFB, IL 62225''.

NOTIFICATION PROCEDURE:

Delete entry and replace with ''Individuals seeking to determine whether information about themselves is contained in this system should address written inquiries to the Program Manager, Cyberspace Support Squadron, Training Flight (CYSS/DOT), 203 West Losey Street, Scott AFB, IL 62225.

For verification purposes, individuals should provide their full name, any details which may assist in locating records, and their signature.

In addition, the requester must provide a notarized statement or an unsworn declaration made in accordance with 28 U.S.C. 1746, in the following format:

If executed outside the United States:

'I declare (or certify, verify, or state) under penalty of perjury under the laws of the United States of America that the foregoing is true and correct. Executed on (date). (Signature)'.

If executed within the United States, its territories, possessions, or commonwealths: 'I declare (or certify, verify, or state) under penalty of perjury that the foregoing is true and correct. Executed on (date). (Signature)''.

RECORD ACCESS PROCEDURES:

Delete entry and replace with ''Individuals seeking to access records about themselves contained in this system of records should address written inquiries to the Program Manager, Cyberspace Support Squadron, Training Flight (CYSS/DOT), 203 West Losey Street, Scott AFB, IL 62225.

For verification purposes, individuals should provide their full name, any details which may assist in locating records, and their signature.

In addition, the requester must provide a notarized statement or an unsworn declaration made in accordance with 28 U.S.C. 1746, in the following format:

If executed outside the United States:

'I declare (or certify, verify, or state) under penalty of perjury under the laws of the United States of America that the foregoing is true and correct. Executed on (date). (Signature)'.

If executed within the United States, its territories, possessions, or commonwealths: 'I declare (or certify, verify, or state) under penalty of perjury that the foregoing is true and correct. Executed on (date). (Signature)'.''

* * * * *

RECORD SOURCE CATEGORIES:

Delete entry and replace with ''Profile information residing in the Air Force Directory Services system.''

EXEMPTIONS CLAIMED FOR THE SYSTEM:

Delete entry and replace with ''An exemption rule for this system has been promulgated in accordance with requirements of 5 U.S.C. 553(b)(1), (2), and (3), and published in 32 CFR 903.1. For additional information contact the system manager.''

[FR Doc. 2012–18263 Filed 7–25–12; 8:45 am]

BILLING CODE 5001–06–P

DEPARTMENT OF EDUCATION

Notice of Submission for OMB Review; Office of Postsecondary Education; Talent Search (TS) Annual Performance Report

SUMMARY: The Talent Search program provides Federal financial assistance in

the form of discretionary grants to to help youth from disadvantaged backgrounds complete secondary education and enroll in and complete programs of postsecondary education; and to publicize the availability of, and facilitate the application for, student financial assistance for persons who seek to pursue postsecondary education. The U.S. Department of Education (Department) is requesting approval of a new TS Annual Performance Report (APR) form to collect annual performance data from projects funded by TS program grants.

DATES: Interested persons are invited to submit comments on or before August 27, 2012.

ADDRESSES: Written comments regarding burden and/or the collection activity requirements should be electronically mailed to *ICDocketMgr@ed.gov* or mailed to U.S. Department of Education, 400 Maryland Avenue SW., LBJ, Washington, DC 20202–4537. Copies of the proposed information collection request may be accessed from *http://edicsweb.ed.gov,* by selecting the ''Browse Pending Collections'' link and by clicking on link number 04825. When you access the information collection, click on ''Download Attachments'' to view. Written requests for information should be addressed to U.S. Department of Education, 400 Maryland Avenue SW., LBJ, Washington, DC 20202–4537. Requests may also be electronically mailed to *ICDocketMgr@ed.gov* or faxed to 202–401–0920. Please specify the complete title of the information collection and OMB Control Number when making your request.

Individuals who use a telecommunications device for the deaf (TDD) may call the Federal Information Relay Service (FIRS) at 1–800–877–8339.

SUPPLEMENTARY INFORMATION: Section 3506 of the Paperwork Reduction Act of 1995 (44 U.S.C. Chapter 35) requires that Federal agencies provide interested parties an early opportunity to comment on information collection requests. The Director, Information Collection Clearance Division, Privacy, Information and Records Management Services, Office of Management, publishes this notice containing proposed information collection requests at the beginning of the Departmental review of the information collection. The Department of Education is especially interested in public comment addressing the following issues: (1) Is this collection necessary to the proper functions of the Department; (2) will this information be processed and used in a timely manner; (3) is the estimate of burden accurate; (4) how might the Department enhance the quality, utility, and clarity of the information to be collected; and (5) how might the Department minimize the burden of this collection on the respondents, including through the use of information technology. Please note that written comments received in response to this notice will be considered public records.

Title of Collection: Talent Search (TS) Annual Performance Report.

OMB Control Number: Pending.

Type of Review: New.

Total Estimated Number of Annual Responses: 461.

Total Estimated Number of Annual Burden Hours: 7,376.

Abstract: Talent Search grantees must submit this report annually. The report provides the Department with information needed to evaluate a grantee's performance and compliance with program requirements and to award prior experience points in accordance with the program regulations. The data collected is also aggregated to provide national information on project participants and program outcomes. This APR reflects new TS program regulations enacted on Oct. 26, 2010. The new regulations were necessitated by changes to the TS program in the Higher Education Opportunity Act of 2008. Fiscal Year 2011–2012 is the first year of a five year grant cycle during which TS projects are required to adhere to the new regulations.

Dated: July 23, 2012.

Darrin A. King,

Director, Information Collection Clearance Division, Privacy, Information and Records Management Services, Office of Management.

[FR Doc. 2012–18320 Filed 7–25–12; 8:45 am]

BILLING CODE 4000–01–P

DEPARTMENT OF EDUCATION

Applications for New Awards; State-Tribal Education Partnership (STEP) Pilot Grant Competition; Reopening the Fiscal Year 2012 Competition

AGENCY: Office of Elementary and Secondary Education, Department of Education.

ACTION: Notice reopening the STEP Pilot Grant Competition for fiscal year (FY) 2012.

Catalog of Federal Domestic Assistance (CFDA) Number: 84.415.

SUMMARY: On May 29, 2012, we published in the **Federal Register** (77 FR 31592) a notice inviting applications for the FY 2012 STEP Pilot Grant Competition. That notice established a July 13, 2012, deadline for transmittal of applications. We are reopening the competition for eligible applicants. Applications are due August 9, 2012.

DATES: Applications Available: July 26, 2012.

Deadline for Transmittal of Applications: August 9, 2012.

FOR FURTHER INFORMATION CONTACT: Tara Ramsey, U.S. Department of Education, 400 Maryland Avenue SW. 3E309 Washington, 20202. Telephone: (202) 260–2063 or by email: *step@ed.gov*.

If you use a telecommunications device for the deaf (TDD) or a text telephone (TTY), call the Federal Relay Service (FRS), toll free, at 1–800–877–8339.

Individuals with disabilities can obtain this document and a copy of the application package in an accessible format (e.g., braille, large print, audiotape, or compact disc) by contacting the program person listed in this section.

SUPPLEMENTARY INFORMATION: We are reopening this competition in order to allow applicants more time to prepare and submit their applications. Given the number of application requirements, the unique nature of this pilot competition, and the short deadline for applications (45 days), some applicants might not have had sufficient time to complete all requirements. At this time we have received a very limited number of applications. In addition, we understand that there was confusion in the field about the preliminary agreement requirement and the consortia requirements for this competition. Therefore, we are supplementing the ''Frequently Asked Questions'' document with additional questions and will re-post the document on the STEP Web site, *http://www2.ed.gov/programs/step*, on the same day that this notice is published.

All eligible applicants are encouraged to apply. Eligible applicants that submitted their applications by the July 13, 2012, deadline may, but are not required to, resubmit their applications. We encourage all applicants to review carefully the ''Frequently Asked Questions'' document available on the program Web site at *http://www2.ed.gov/programs/step* to ensure that they have met all requirements.

All information in the May 29, 2012, notice inviting applications for this competition remains the same, except for the deadline date. Information about the STEP program and competition is available on the program Web site at *http://www2.ed.gov/programs/step*.

Applications for grants under the STEP Competition, CFDA number 84.415, must be submitted electronically using the Government-wide Grants.gov Apply site at www.Grants.gov. For information about how to submit your application electronically, please refer to *Electronic Submission of Applications* in section IV.7. of the May 29, 2012, notice (77 FR 31592, 31597).

Electronic Access to This Document: The official version of this document is the document published in the **Federal Register**. Free Internet access to the official edition of the **Federal Register** and the Code of Federal Regulations is available via the Federal Digital System at: *www.gpo.gov/fdsys.* At this site you can view this document, as well as all other documents of this Department published in the **Federal Register**, in text or Adobe Portable Document Format (PDF). To use PDF you must have Adobe Acrobat Reader, which is available free at the site.

You may also access documents of the Department published in the **Federal Register** by using the article search feature at: *www.federalregister.gov.* Specifically, through the advanced search feature at this site, you can limit your search to documents published by the Department.

Program Authority: 20 U.S.C. 7451(a)(4).

Dated: July 20, 2012.

Deborah S. Delisle,

Assistant Secretary for Elementary and Secondary Education.

[FR Doc. 2012–18304 Filed 7–25–12; 8:45 am]

BILLING CODE 4000–01–P

DEPARTMENT OF EDUCATION

Equity and Excellence Commission; Meeting

AGENCY: Office for Civil Rights, U.S. Department of Education.

ACTION: Notice of an open meeting.

SUMMARY: This notice sets forth the schedule and proposed agenda of an upcoming meeting of the Equity and Excellence Commission (Commission). The notice also describes the functions of the Commission. Notice of this meeting is required by section 10(a)(2) of the Federal Advisory Committee Act (FACA) and is intended to notify the public of their opportunity to attend.

DATES: August 9, 2012.

Time: 11:00 a.m. to 3:00 p.m. Eastern Standard Time.

ADDRESSES: The Commission will meet in Washington, DC at the United States Department of Education at 400 Maryland Avenue SW., Washington, DC 20202, in Room 4W334.

FOR FURTHER INFORMATION CONTACT: Guy Johnson, Designated Federal Official, Equity and Excellence Commission, U.S. Department of Education, 400 Maryland Avenue SW., Washington, DC 20202. Email: *equitycommission@ed.gov*. Telephone: (202) 453–6567.

SUPPLEMENTARY INFORMATION: On August 9, 2012 from 11:00 a.m. to 3:00 p.m. Eastern Standard Time, the Equity and Excellence Commission will hold an open meeting in Washington, DC at the United States Department of Education at 400 Maryland Avenue SW., Washington, DC 20202, in Room 4W334.

The purpose of the Commission is to collect information, analyze issues, and obtain broad public input regarding how the Federal government can increase educational opportunity by improving school funding equity. The Commission will also make recommendations for restructuring school finance systems to achieve equity in the distribution of educational resources and further student performance, especially for the students at the lower end of the achievement gap. The Commission will examine the disparities in meaningful educational opportunities that give rise to the achievement gap, with a focus on systems of finance, and recommend appropriate ways in which Federal policies could address such disparities.

The agenda for the Commission's August 9, 2012 meeting will include review and deliberation of materials prepared by the writing teams for consideration in the draft report to the Secretary of the U.S. Department of Education (Secretary), summarizing the Commission's findings and recommendations for appropriate ways in which Federal policies can improve equity in school finance. The Commission is also expected to discuss the timing and content of future Commission meetings, as well what further materials, if any, will be produced. Due to time constraints, there will not be a public comment period. However, individuals wishing to provide written comments may send their comments to the Commission via email at *equitycommission@ed.gov* or via U.S. mail to Guy Johnson, Designated Federal Official, Equity and Excellence Commission, U.S. Department of Education, 400 Maryland Avenue SW., Washington, DC 20202. For comments related to the upcoming meeting, please submit comments for receipt no later than August 1, 2012.

Individuals interested in attending the meeting must register in advance, as meeting room seating may be limited. Please contact Guy Johnson at (202) 453–6567 or by email at *equitycommission@ed.gov*. Individuals who will need accommodations for a disability in order to attend the meeting (e.g., interpreting services, assistive listening devices, or materials in alternative format) should notify Guy Johnson at (202) 453–6567 no later than August 1, 2012. We will attempt to meet requests for accommodations after this date but cannot guarantee availability. The meeting site is accessible to individuals with disabilities.

Records are kept of all Commission proceedings and are available for public inspection at the Department of Education, 400 Maryland Avenue SW., Washington, DC 20202 between the hours of 9:00 a.m. to 5:00 p.m. Eastern Standard Time. You may contact Guy Johnson, Designated Federal Official, Equity and Excellence Commission, at *equitycommission@ed.gov*, or at (202) 453–6567 if you have additional questions regarding inspection of records.

John DiPaolo,

Chief of Staff, Office for Civil Rights, United States Department of Education.

[FR Doc. 2012–18306 Filed 7–25–12; 8:45 am]

BILLING CODE 4000–01–P

DEPARTMENT OF ENERGY

Bonneville Power Administration

Memorandum of Agreement With the Kalispel Tribe on Columbia Basin Fish Accords

AGENCY: Bonneville Power Administration (BPA), Department of Energy (DOE).

ACTION: Notice of availability of Administrator's Record of Decision (ROD).

Memorandum of Agreement With Kalispel Tribe

SUMMARY: This notice announces the availability of the BPA's ROD for entering into an Memorandum of Agreement (MOA) with the Kalispel Tribe for implementing fish and wildlife projects in and around Lake Pend Oreille and the Pend Oreille River in Pend Orielle County, Washington and Bonner Counties, Idaho. BPA has decided to enter into the MOA to pursue mutual goals with the Kalispel Tribe of protecting and recovering fish and wildlife affected by the Federal Columbia River Power System in the area. This ROD is tiered to the BPA's Fish and Wildlife Implementation Program Environmental Impact

Statement (DOE/EIS–0312, April 2003) and its ROD (October 31, 2003).

ADDRESSES: Copies of the ROD may be obtained by calling BPA's toll-free document request line, 1–800–622–4520. The ROD is also available on our Web site, *www.efw.bpa.gov.*

FOR FURTHER INFORMATION CONTACT: Mickey Carter, Bonneville Power Administration—KEC–4, P.O. Box 3621, Portland, Oregon, 97208–3621; toll-free telephone number 1–800–622–4519; fax number 503–230–5699; or email *macarter@bpa.gov.*

Issued in Portland, Oregon, on July 17, 2012.

William K. Drummond,

Acting Administrator and Chief Executive Officer.

[FR Doc. 2012–18285 Filed 7–25–12; 8:45 am]

BILLING CODE 6450–01–P

DEPARTMENT OF ENERGY

Federal Energy Regulatory Commission

Combined Notice of Filings

Take notice that the Commission has received the following Natural Gas Pipeline Rate and Refund Report filings:

Filings Instituting Proceedings

Docket Numbers: CP08–404–000.
Applicants: MarkWest Pioneer, L.L.C.
Description: MarkWest Pioneer, L.L.C. submits its Cost and Revenue Study.
Filed Date: 7/13/12.
Accession Number: 20120713–5068.
Comments Due: 5 p.m. ET 7/31/12.

Docket Numbers: RP12–872–000.
Applicants: Trailblazer Pipeline Company LLC.
Description: 2012–07–18 NC Mieco, CIMA to be effective 7/19/2012.
Filed Date: 7/18/12.
Accession Number: 20120718–5098.
Comments Due: 5 p.m. ET 7/30/12.

Docket Numbers: RP12–873–000.
Applicants: Trailblazer Pipeline Company LLC.
Description: 2012–07–17 NC K's Cima, Mieco, Concord to be effective 7/18/2012.
Filed Date: 7/17/12.
Accession Number: 20120717–5139.
Comments Due: 5 p.m. ET 7/30/12.

Any person desiring to intervene or protest in any of the above proceedings must file in accordance with Rules 211 and 214 of the Commission's Regulations (18 CFR 385.211 and 385.214) on or before 5:00 p.m. Eastern time on the specified comment date. Protests may be considered, but intervention is necessary to become a party to the proceeding.

Filings in Existing Proceedings

Docket Numbers: RP01–382–022.
Applicants: Northern Natural Gas Company.
Description: Northern Natural Gas Company submits for filing its annual report setting forth the Carlton Resolution buyout, surcharge and penalty dollars reimbursed to the Carlton Sourcers on their May reservation invoices for the 2011–2012 heating season.
Filed Date: 6/1/12.
Accession Number: 20120601–5144.
Comments Due: 5 p.m. ET 6/13/12.

Docket Numbers: RP12–828–001.
Applicants: Gulf South Pipeline Company, LP.
Description: Amendment to Filing to be effective 7/1/2012.
Filed Date: 7/18/12.
Accession Number: 20120718–5016.
Comments Due: 5 p.m. ET 7/30/12.

Any person desiring to protest in any the above proceedings must file in accordance with Rule 211 of the Commission's Regulations (18 CFR 385.211) on or before 5:00 p.m. Eastern time on the specified comment date.

The filings are accessible in the Commission's eLibrary system by clicking on the links or querying the docket number.

eFiling is encouraged. More detailed information relating to filing requirements, interventions, protests, and service can be found at: *http://www.ferc.gov/docs-filing/efiling/filing-req.pdf.* For other information, call (866) 208–3676 (toll free). For TTY, call (202) 502–8659.

Dated: July 19, 2012.

Nathaniel J. Davis, Sr.

Deputy Secretary

[FR Doc. 2012–18266 Filed 7–25–12; 8:45 am]

BILLING CODE 6717–01–P

DEPARTMENT OF ENERGY

Federal Energy Regulatory Commission

Combined Notice of Filings #1

Take notice that the Commission received the following electric corporate filings:

Docket Numbers: EC12–121–000.
Applicants: Direct Energy Services, LLC, Energetix, Inc., NYSEG Solutions, Inc.
Description: Joint Application for Authorization under Section 203 of the Federal Power Act of Direct Energy Services, LLC, et al.
Filed Date: 7/18/12.
Accession Number: 20120718–5104.
Comments Due: 5 p.m. ET 8/8/12.

Take notice that the Commission received the following exempt wholesale generator filings:

Docket Numbers: EG12–90–000.
Applicants: Russell City Energy Company, LLC.
Description: Notice of Self-Certification of Exempt Wholesale Generator Status.
Filed Date: 7/18/12.
Accession Number: 20120718–5109.
Comments Due: 5 p.m. ET 8/8/12.

Take notice that the Commission received the following electric rate filings:

Docket Numbers: ER12–1635–002.
Applicants: Wolverine Power Supply Cooperative, Inc.
Description: Oden IFA FERC Rate Schedule No. 9 to be effective 4/27/2012.
Filed Date: 7/16/12.
Accession Number: 20120716–5160.
Comments Due: 5 p.m. ET 8/6/12.

Docket Numbers: ER12–1946–001.
Applicants: Duke Energy Beckjord, LLC.
Description: Amendment to MBR Filing to be effective 10/1/2012.
Filed Date: 7/18/12.
Accession Number: 20120718–5077.
Comments Due: 5 p.m. ET 8/8/12.

Docket Numbers: ER12–1948–001.
Applicants: Duke Energy Conesville, LLC.
Description: Amendment to MBR Tariff Filing to be effective 10/1/2012.
Filed Date: 7/18/12.
Accession Number: 20120718–5066.
Comments Due: 5 p.m. ET 8/8/12.

Docket Numbers: ER12–1951–001.
Applicants: Duke Energy Dicks Creek, LLC.
Description: Amendment to MBR Tariff Filing to be effective 10/1/2012.
Filed Date: 7/18/12.
Accession Number: 20120718–5080.
Comments Due: 5 p.m. ET 8/8/12.

Docket Numbers: ER12–1954–001.
Applicants: Duke Energy Killen, LLC.
Description: Amendment to MBR Tariff Filing to be effective 10/2/2012.
Filed Date: 7/18/12.
Accession Number: 20120718–5094.
Comments Due: 5 p.m. ET 8/8/12.

Docket Numbers: ER12–1956–001.
Applicants: Duke Energy Miami Fort, LLC.
Description: Amendment to MBR Filing to be effective 10/1/2012.
Filed Date: 7/18/12.
Accession Number: 20120718–5082.
Comments Due: 5 p.m. ET 8/8/12.

Docket Numbers: ER12–1958–001.
Applicants: Duke Energy Piketon, LLC.

Description: Amendment to MBR Tariff Filing to be effective 10/1/2012.
Filed Date: 7/18/12.
Accession Number: 20120718–5083.
Comments Due: 5 p.m. ET 8/8/12.

Docket Numbers: ER12–1959–001.
Applicants: Duke Energy Stuart, LLC.
Description: Amendment to MBR Tariff Filing to be effective 10/1/2012.
Filed Date: 7/18/12.
Accession Number: 20120718–5084
Comments Due: 5 p.m. ET 8/8/12.

Docket Numbers: ER12–1961–001.
Applicants: Duke Energy Zimmer, LLC.
Description: Amendment to MBR Tariff Filing to be effective 10/1/2012.
Filed Date: 7/18/12.
Accession Number: 20120718–5090.
Comments Due: 5 p.m. ET 8/8/12.

Docket Numbers: ER12–2080–001.
Applicants: GenOn Power Midwest, LP.
Description: Revised Effective Date and Request to Defer Action to be effective 12/31/9998.
Filed Date: 7/18/12.
Accession Number: 20120718–5074.
Comments Due: 5 p.m. ET 8/8/12.

Docket Numbers: ER12–2145–001.
Applicants: EC&R O&M LLC.
Description: Amendment to Application for Market-Based Rate Authority to be effective 6/29/2012.
Filed Date: 7/18/12.
Accession Number: 20120718–5002.
Comments Due: 5 p.m. ET 8/1/12.

Docket Numbers: ER12–2257–000.
Applicants: Midwest Independent Transmission System Operator, Inc.
Description: SA 2017 Barton Windpower-ITC Midwest to be effective 7/19/2012.
Filed Date: 7/18/12.
Accession Number: 20120718–5035.
Comments Due: 5 p.m. ET 8/8/12.

Docket Numbers: ER12–2258–000.
Applicants: Midwest Independent Transmission System Operator, Inc.
Description: SA 2456 Emmet County-ITC Midwest GIA to be effective 7/19/2012.
Filed Date: 7/18/12.
Accession Number: 20120718–5039.
Comments Due: 5 p.m. ET 8/8/12.

Docket Numbers: ER12–2259–000.
Applicants: Midwest Independent Transmission System Operator, Inc.
Description: SA 1902 Harvest Windfarm LLC-ITC Transmission GIA to be effective 7/19/2012.
Filed Date: 7/18/12.
Accession Number: 20120718–5058.
Comments Due: 5 p.m. ET 8/8/12.

Docket Numbers: ER12–2260–000.
Applicants: New York Independent System Operator, Inc.
Description: NYISO Tariff Amendments to Permit Recovery of Charges for ITC PARs to be effective 4/5/2012.
Filed Date: 7/18/12.
Accession Number: 20120718–5079.
Comments Due: 5 p.m. ET 8/8/12.

Docket Numbers: ER12–2261–000.
Applicants: Russell City Energy Company, LLC.
Description: Application for Market-Based Rate Authorization to be effective 7/19/2012.
Filed Date: 7/18/12.
Accession Number: 20120718–5100.
Comments Due: 5 p.m. ET 8/8/12.

Docket Numbers: ER12–2262–000.
Applicants: PJM Interconnection, L.L.C.
Description: Compliance Filing per Order dated 4/19/2012 in ER09–1063–004 to be effective 10/1/2012.
Filed Date: 7/18/12.
Accession Number: 20120718–5101.
Comments Due: 5 p.m. ET 8/8/12.

Docket Numbers: ER12–2263–000.
Applicants: Arizona Public Service Company.
Description: Amendment to Rate Schedule No. 217, Exhibit B to be effective 10/1/2012.
Filed Date: 7/19/12.
Accession Number: 20120719–5001.
Comments Due: 5 p.m. ET 8/9/12.

Docket Numbers: ER12–2264–000.
Applicants: Southwest Power Pool, Inc.
Description: Compliance Filing—ER12–1600—Exelon Market Participant Service Agreement to be effective 4/1/2012.
Filed Date: 7/17/12.
Accession Number: 20120717–5140.
Comments Due: 5 p.m. ET 8/7/12.

The filings are accessible in the Commission's eLibrary system by clicking on the links or querying the docket number.

Any person desiring to intervene or protest in any of the above proceedings must file in accordance with Rules 211 and 214 of the Commission's Regulations (18 CFR 385.211 and 385.214) on or before 5:00 p.m. Eastern time on the specified comment date. Protests may be considered, but intervention is necessary to become a party to the proceeding.

eFiling is encouraged. More detailed information relating to filing requirements, interventions, protests, service, and qualifying facilities filings can be found at: *http://www.ferc.gov/docs-filing/efiling/filing-req.pdf.* For other information, call (866) 208–3676 (toll free). For TTY, call (202) 502–8659.

Dated: July 19, 2012.

Nathaniel J. Davis, Sr.,

Deputy Secretary.

[FR Doc. 2012–18239 Filed 7–25–12; 8:45 am]

BILLING CODE 6717–01–P

DEPARTMENT OF ENERGY

Federal Energy Regulatory Commission

[Docket No. RM98–1–000]

Records Governing Off-the-Record Communications

Public Notice

This constitutes notice, in accordance with 18 CFR 385.2201(b), of the receipt of prohibited and exempt off-the-record communications.

Order No. 607 (64 FR 51222, September 22, 1999) requires Commission decisional employees, who make or receive a prohibited or exempt off-the-record communication relevant to the merits of a contested proceeding, to deliver to the Secretary of the Commission, a copy of the communication, if written, or a summary of the substance of any oral communication.

Prohibited communications are included in a public, non-decisional file associated with, but not a part of, the decisional record of the proceeding. Unless the Commission determines that the prohibited communication and any responses thereto should become a part of the decisional record, the prohibited off-the-record communication will not be considered by the Commission in reaching its decision. Parties to a proceeding may seek the opportunity to respond to any facts or contentions made in a prohibited off-the-record communication, and may request that the Commission place the prohibited communication and responses thereto in the decisional record. The Commission will grant such a request only when it determines that fairness so requires. Any person identified below as having made a prohibited off-the-record communication shall serve the document on all parties listed on the official service list for the applicable proceeding in accordance with Rule 2010, 18 CFR 385.2010.

Exempt off-the-record communications are included in the decisional record of the proceeding, unless the communication was with a cooperating agency as described by 40 CFR 1501.6, made under 18 CFR 385.2201(e) (1) (v).

The following is a list of off-the-record communications recently

received by the Secretary of the Commission. The communications listed are grouped by docket numbers in ascending order. These filings are available for review at the Commission in the Public Reference Room or may be viewed on the Commission's Web site at *http://www.ferc.gov* using the eLibrary link. Enter the docket number, excluding the last three digits, in the docket number field to access the document. For assistance, please contact FERC, Online Support at FERCOnlineSupport@ferc.gov or toll free at (866)208–3676, or for TTY, contact (202)502–8659.

Docket No.	Communication date	Presenter or requester
1. CP11–72–000	6–27–12	Ryan Bernstein [1].
2. CP11–515–000	7–9–12	Michael Mojica [2].
3. CP08–6–000	7–11–12	David J. Devine.
4. CP11–161–000	7–13–12	Jolie DeFeis [3].
Exempt:		
1. P–12796–004	6–21–12	Eileen McLanahan [4].
2. P–12690–005	6–22–12	FERC Staff [5].
3. P–2458–000	6–27–12	Hon. Michael H. Michaud.
4. CP11–161–000	6–27–12	Hon. Tom Marino.
5. P–11810–000	6–28–12	Hon. Jeff Duncan.
6. CP11–72–000	6–28–12	Hon. Mary L. Landrieu.
7. CP11–161–000	7–5–12	Members of Congress [6].
8. OR12–17–000	7–6–12	Tex "Red Tipped Arrow" Hall.
9. CP12–72–000	7–11–12	Dept. of the Interior Staff.

[1] Email record.
[2] Email record.
[3] Email record.
[4] Email record.
[5] Email record.
[6] Hons. Robert P. Casey, Jr. and Tom Marino.

Dated: July 20, 2012.

Nathaniel J. Davis, Sr.,

Deputy Secretary.

[FR Doc. 2012–18238 Filed 7–25–12; 8:45 am]

BILLING CODE 6717–01–P

ENVIRONMENTAL PROTECTION AGENCY

[EPA–HQ–OA–2012–0033; FRL–9706–4]

Proposed Information Collection Request; Comment Request; Valuing Improved Water Quality in the Chesapeake Bay Using Stated Preference Methods (New)

AGENCY: Environmental Protection Agency (EPA).

ACTION: Notice.

SUMMARY: The Environmental Protection Agency is planning to submit an information collection request (ICR), "Valuing Improved Water Quality in the Chesapeake Bay Using Stated Preference Methods (New)" (EPA ICR No. 2456.01, OMB Control No. 2010–NEW) to the Office of Management and Budget (OMB) for review and approval in accordance with the Paperwork Reduction Act. On May 24, 2012 EPA solicited public comments for 60 days on the proposed ICR. Certain supporting documents were not available for public review in the docket during the first 30 days of the comment period, thus EPA is re-opening the comment period for an additional 30 days from the publication of this notice. Public comments are being solicited on specific aspects of the proposed information collection as described below. This is a request for approval of a new collection. An Agency may not conduct or sponsor and a person is not required to respond to a collection of information unless it displays a currently valid OMB control number.

DATES: Comments must be submitted on or before August 27, 2012.

ADDRESSES: Submit your comments, referencing Docket ID No. EPA–HQ–OA–2012–0033 online using *www.regulations.gov* (our preferred method); by email to *oei.docket@epa.gov*; by fax at (202) 566–9744; or by mail to EPA Docket Center, Environmental Protection Agency, Mail Code 28221T, 1200 Pennsylvania Ave. NW., Washington, DC 20460.

EPA's policy is that all comments received will be included in the public docket without change including any personal information provided, unless the comment includes profanity, threats, information claimed to be Confidential Business Information (CBI) or other information whose disclosure is restricted by statute.

FOR FURTHER INFORMATION CONTACT: Dr. Nathalie Simon, National Center for Environmental Economics, Office of Policy, (1809T), Environmental Protection Agency, 1200 Pennsylvania Ave. NW., Washington, DC 20460; telephone number: 202–566–2347; fax number: 202–566–2363; email address: *simon.nathalie@epa.gov*.

SUPPLEMENTARY INFORMATION: Supporting documents which explain in detail the information that the EPA will be collecting are available in the public docket for this ICR. The docket can be viewed online at www.regulations.gov or in person at the EPA Docket Center, EPA West, Room 3334, 1301 Constitution Ave. NW., Washington, DC. The telephone number for the Docket Center is 202–566–1744. For additional information about EPA's public docket, visit *http://www.epa.gov/dockets*.

Pursuant to section 3506(c)(2)(A) of the PRA, EPA is soliciting comments and information to enable it to: (i) Evaluate whether the proposed collection of information is necessary for the proper performance of the functions of the Agency, including whether the information will have practical utility; (ii) evaluate the accuracy of the Agency's estimate of the burden of the proposed collection of information, including the validity of the methodology and assumptions used; (iii) enhance the quality, utility, and clarity of the information to be collected; and (iv) minimize the burden of the collection of information on those who are to respond, including through the use of appropriate automated electronic, mechanical, or other technological collection techniques or other forms of information technology, e.g., permitting electronic submission of responses. EPA will consider the comments received and amend the ICR as appropriate. The final ICR package

will then be submitted to OMB for review and approval. At that time, EPA will issue another **Federal Register** notice to announce the submission of the ICR to OMB and the opportunity to submit additional comments to OMB.

Abstract: The Clean Water Act (CWA) directs EPA to coordinate Federal and State efforts to improve water quality in the Chesapeake Bay. In 2009, Executive Order (E.O.) 13508 re-emphasized this mandate, directing EPA to define the next generation of tools and actions to restore water quality in the Bay and describe the changes to be made to regulations, programs, and policies to implement these actions. In response, EPA is undertaking an assessment of the costs and benefits of meeting established pollution budgets, called Total Maximum Daily Loads (TMDL), of nitrogen, phosphorus, and sediment for the Chesapeake Bay.

The Chesapeake Bay watershed encompasses 64,000 square miles in parts of six states and the District of Columbia. While efforts have been underway to restore the Bay for more than 25 years, and significant progress has been made over that period, the TMDLs are necessary to continue progress toward the goal of a healthy Bay. The watershed states of New York, Pennsylvania, Delaware, West Virginia, Virginia, and Maryland, as well as the District of Columbia, have developed Watershed Implementation Plans (WIPs) detailing the steps each will take to meet its obligations under the TMDLs. EPA has begun a new study to estimate costs of compliance with the TMDLs. A multitude of benefits may also be anticipated to arise from restoring the Chesapeake Bay. It is important to put cost estimates in perspective by estimating corresponding benefits.

EPA's National Center for Environmental Economics (NCEE) is undertaking a benefits analysis of improvements in Bay water quality under the TMDLs, as well as of ancillary benefits that might arise from terrestrial measures taken to improve water quality. As part of this analysis, NCEE plans to conduct a broad-based inquiry into benefits using a state-of-the-art stated preference survey. Benefits from the TMDLs for the Chesapeake will accrue to those who live on or near the Bay and its tributaries, as well as to those who live further away and may never visit the Bay but have a general concern for the environment. The latter category of benefits is typically called ''non-use values'' and estimating the monetary value can only be achieved through a stated preference survey.

In addition, a stated preference survey is able to estimate ''use values,'' those benefits that accrue to individuals who choose to live on or near the Bay or recreate in the watershed. Stated preference surveys allow the analyst to define a specific object of choice or suite of choices such that benefits are defined in as precise a manner as feasible. While use benefits of water quality improvements in the Chesapeake Bay watershed will also be estimated through other revealed preference methods, the stated preference survey allows for careful specification of the choice scenarios and will complement estimates found using other methods. Participation in the survey will be voluntary and the identity of the participants will be kept confidential.

Form Numbers: None.

Respondents/affected entities: Individuals 18 years of age or older, residing in one of 18 east coast states and the District of Columbia.

Respondent's obligation to respond: voluntary.

Estimated number of respondents: Primary survey: 2,400 respondents; 400 non-response survey.

Frequency of response: one time collection.

Total estimated burden: 1,034 hours (per year). Burden is defined at 5 CFR 1320.03(b).

Total estimated cost: $24,123 (per year), includes $0 annualized capital or operation & maintenance costs.

Dated: July 20, 2012.

Al McGartland,

Director, National Center for Environmental Economics, Office of Policy.

[FR Doc. 2012–18319 Filed 7–25–12; 8:45 am]

BILLING CODE 6560–50–P

FEDERAL ELECTION COMMISSION

[Notice 2012–05]

Filing Dates for the Michigan Special Election in the 11th Congressional District

AGENCY: Federal Election Commission.

ACTION: Notice of filing dates for special election.

SUMMARY: Michigan has scheduled elections on September 5, 2012, and November 6, 2012, to fill the U.S. House seat in the 11th Congressional District vacated by Representative Thaddeus McCotter.

Committees required to file reports in connection with the Special Primary Election on September 5, 2012, shall file a 12-day Pre-Primary Report. Committees required to file reports in connection with both the Special Primary and Special General Election on November 6, 2012, shall file a 12-day Pre-Primary Report, a 12-day Pre-General Report, and a 30-day Post-General Report.

FOR FURTHER INFORMATION CONTACT: Ms. Elizabeth S. Kurland, Information Division, 999 E Street NW., Washington, DC 20463; Telephone: (202) 694–1100; Toll Free (800) 424–9530.

SUPPLEMENTARY INFORMATION:

Principal Campaign Committees

All principal campaign committees of candidates who participate in the Michigan Special Primary and Special General Elections shall file a 12-day Pre-Primary Report on August 24, 2012; a 12-day Pre-General Report on October 25, 2012; and a 30-day Post-General Report on December 6, 2012. (See chart below for the closing date for each report).

All principal campaign committees of candidates participating only in the Special Primary Election shall file a 12-day Pre-Primary Report on August 24, 2012. (See chart below for the closing date for each report).

Note that these reports are in addition to the campaign committee's quarterly filing in October. (See chart below for the closing date for each report).

Unauthorized Committees (PACs and Party Committees)

Political committees filing on a quarterly basis in 2012 are subject to special election reporting if they make previously undisclosed contributions or expenditures in connection with the Michigan Special Primary or Special General Election by the close of books for the applicable report(s). (See chart below for the closing date for each report).

Committees filing monthly that make contributions or expenditures in connection with the Michigan Special Primary or General Elections will continue to file according to the monthly reporting schedule.

Additional disclosure information in connection with the Michigan Special Election may be found on the FEC Web site at *http://www.fec.gov/info/report_dates.shtml*.

Disclosure of Lobbyist Bundling Activity

Principal campaign committees, party committees and Leadership PACs that are otherwise required to file reports in connection with the special elections must simultaneously file FEC Form 3L if they receive two or more bundled contributions from lobbyists/registrants or lobbyist/registrant PACs that aggregate in excess of $16,700 during the special election reporting periods

(see charts below for closing date of each period). 11 CFR 104.22(a)(5)(v).

CALENDAR OF REPORTING DATES FOR MICHIGAN SPECIAL ELECTION

Report	Close of books [1]	Reg./cert. & overnight mailing deadline	Filing deadline
Committees Involved in Only the Special Primary (09/05/12) Must File			
Pre-Primary	08/16/12	08/21/12	08/24/12
October Quarterly	09/30/12	10/15/12	10/15/12
Committees Involved in Both the Special Primary (09/05/12) and Special General (11/06/12) Must File			
Pre-Primary	08/16/12	08/21/12	08/24/12
October Quarterly	09/30/12	10/15/12	10/15/12
Pre-General	10/17/12	10/22/12	10/25/12
Post-General	11/26/12	12/06/12	12/06/12
Year-End	12/31/12	01/31/13	01/31/13
Committees Involved in Only the Special General (11/06/12) Must File			
Pre-General	10/17/12	10/22/12	10/25/12
Post-General	11/26/12	12/06/12	12/06/12
Year-End	12/31/12	01/31/13	01/31/13

[1] These dates indicate the end of the reporting period. A reporting period always begins the day after the closing date of the last report filed. If the committee is new and has not previously filed a report, the first report must cover all activity that occurred before the committee registered as a political committee with the Commission up through the close of books for the first report due.

Dated: July 19, 2012.

On behalf of the Commission.

Caroline C. Hunter,

Chair, Federal Election Commission.

[FR Doc. 2012–18204 Filed 7–25–12; 8:45 am]

BILLING CODE 6715–01–P

FEDERAL ELECTION COMMISSION

Sunshine Act Meeting

AGENCY: Federal Election Commission.

DATE & TIME: Tuesday July 31, 2012 At 10:00 a.m.

PLACE: 999 E Street NW., Washington, DC

STATUS: This meeting will be closed to the public.

Items To Be Discussed

Compliance matters pursuant to 2 U.S.C. 437g.

Audits conducted pursuant to 2 U.S.C. 437g, 438(b), and Title 26, U.S.C.

Matters concerning participation in civil actions or proceedings or arbitration.

Internal personnel rules and procedures or matters affecting a particular employee.

Information the premature disclosure of which would be likely to have a considerable adverse effect on the implementation of a proposed Commission action.

* * * * *

PERSON TO CONTACT FOR INFORMATION: Judith Ingram, Press Officer, Telephone: (202) 694–1220.

Shelley E. Garr,

Deputy Secretary of the Commission.

[FR Doc. 2012–18381 Filed 7–24–12; 4:15 pm]

BILLING CODE 6715–01–P

FEDERAL RESERVE SYSTEM

Change in Bank Control Notices; Acquisitions of Shares of a Bank or Bank Holding Company

The notificants listed below have applied under the Change in Bank Control Act (12 U.S.C. 1817(j)) and § 225.41 of the Board's Regulation Y (12 CFR 225.41) to acquire shares of a bank or bank holding company. The factors that are considered in acting on the notices are set forth in paragraph 7 of the Act (12 U.S.C. 1817(j)(7)).

The notices are available for immediate inspection at the Federal Reserve Bank indicated. The notices also will be available for inspection at the offices of the Board of Governors. Interested persons may express their views in writing to the Reserve Bank indicated for that notice or to the offices of the Board of Governors. Comments must be received not later than August 10, 2012.

A. Federal Reserve Bank of Boston (Richard Walker, Community Affairs Officer) 600 Atlantic Avenue, Boston, Massachusetts 02210–2204:

1. *Investors of America, L.P.* to retain voting shares of Hampden Bancorp, Inc., both in Springfield, Massachusetts, and thereby indirectly retain voting shares of Hampden Bank, Springfield, Massachusetts.

Board of Governors of the Federal Reserve System, July 23, 2012.

Margaret McCloskey Shanks,

Associate Secretary of the Board.

[FR Doc. 2012–18246 Filed 7–25–12; 8:45 am]

BILLING CODE 6210–01–P

FEDERAL RESERVE SYSTEM

Formations of, Acquisitions by, and Mergers of Bank Holding Companies

The companies listed in this notice have applied to the Board for approval, pursuant to the Bank Holding Company Act of 1956 (12 U.S.C. 1841 *et seq.*) (BHC Act), Regulation Y (12 CFR Part 225), and all other applicable statutes and regulations to become a bank holding company and/or to acquire the assets or the ownership of, control of, or the power to vote shares of a bank or bank holding company and all of the banks and nonbanking companies owned by the bank holding company, including the companies listed below.

The applications listed below, as well as other related filings required by the Board, are available for immediate inspection at the Federal Reserve Bank indicated. The applications will also be available for inspection at the offices of

the Board of Governors. Interested persons may express their views in writing on the standards enumerated in the BHC Act (12 U.S.C. 1842(c)). If the proposal also involves the acquisition of a nonbanking company, the review also includes whether the acquisition of the nonbanking company complies with the standards in section 4 of the BHC Act (12 U.S.C. 1843). Unless otherwise noted, nonbanking activities will be conducted throughout the United States.

Unless otherwise noted, comments regarding each of these applications must be received at the Reserve Bank indicated or the offices of the Board of Governors not later than August 20, 2012.

A. Federal Reserve Bank of St. Louis (Glenda Wilson, Community Affairs Officer) P.O. Box 442, St. Louis, Missouri 63166–2034:

1. *Belleville Bancorp, Inc.,* Belleville, Illinois; to become a bank holding company by acquiring 100 percent of the voting shares of Bank of Belleville, Belleville, Illinois.

Board of Governors of the Federal Reserve System, July 23, 2012.

Margaret McCloskey Shanks,

Associate Secretary of the Board.

[FR Doc. 2012–18245 Filed 7–25–12; 8:45 am]

BILLING CODE 6210–01–P

GENERAL SERVICES ADMINISTRATION

[Notice–PBS–2012–05; Docket 2012–0002; Sequence 16]

Notice Pursuant to Executive Order 12600 of Receipt of Freedom of Information Act (FOIA); Requests for Real Property Lease Documents From GSA Leases With Private Sector Landlords

AGENCY: General Services Administration (GSA).

ACTION: Notice.

SUMMARY: This notice provides submitters notice pursuant to Executive Order 12600 that the GSA, Public Buildings Service, Office of Leasing has received several specific FOIA requests for certain GSA real property lease documents with private sector landlords. This notice describes typical data elements contained in these lease documents, and their exemption status under FOIA in response to these specific FOIA requests.

DATES: Comments must be received on or before August 27, 2012.

ADDRESSES: Submit comments identified by ''Notice–PBS–2012–05'', by any of the following methods:

- *Regulations.gov: http://www.regulations.gov.*

Submit comments via the Federal eRulemaking portal by searching for ''Notice–PBS–2012–05''.'' Select the link ''Submit a Comment'' that corresponds with ''Notice–PBS–2012–05.'' Follow the instructions provided at the ''Submit a Comment'' screen. Please include your name, company name (if any), and ''Notice–PBS–2012–05'' on your attached document.

- *Fax:* (202) 501–4067.
- *Mail:* General Services Administration, Regulatory Secretariat (MVCB), Attn: Hada Flowers/Notice–PBS–2012–05, 1275 First Street NE., 7th Floor, Washington, DC 20417.

Instructions: Please submit comments only and cite ''Notice-PBS–2012–05'', in all correspondence related to this notice. All comments received will be posted without change to *http://www.regulations.gov,* including any personal and/or business confidential information provided.

FOR FURTHER INFORMATION CONTACT: John D. Thomas at (202) 501–2454.

SUPPLEMENTARY INFORMATION: GSA, the nation's largest public real estate organization, provides workspace for more than 1.2 million federal workers through its Public Buildings Service. Approximately half of the employees are housed in buildings owned by the federal government and half are located in over 8,100 separate leased properties (in over 8,500 leases), including buildings, land, antenna sites, etc. across the country. In order to respond to these specific FOIA requests, GSA has identified 48 data elements that may be found in the requested lease documents. Some of these data elements are exempt from disclosure pursuant to Exemption 4 of the Freedom of information Act (FOIA), 5 U.S.C. 552(b)(4).

The following table contains a description of these data fields and their exempt status:

FOIA Review of the CCR Data Fields

Data field	Exempt status	Public comments
(1) Lease Number	Not exempt under the FOIA.	
(2) Lease Award Date	Not exempt under the FOIA.	
(3) Leased Building Address (Including City State and Zip Code).	Not exempt under the FOIA.	
(4) Lease Effective Date	Not exempt under the FOIA.	
(5) Lease Expiration Date	Not exempt under the FOIA.	
(6) Length of Renewal Option Term(s)	Not exempt under the FOIA.	
(7) Renewal Option Rental Rate	Exempt—5 U.S.C. 522(b)(4).	
(8) Information on Lease termination rights	Not exempt under the FOIA.	
(9) Operating Cost Rate (Including Itemized Components of Operating Costs, Such as Fuel Costs, Utilities, And Janitorial Costs).	Exempt—5 U.S.C. 522(b)(4).	
(10) Lease Agreement Rentable Square Feet (Rsf).	Not exempt under the FOIA.	
(11) Lease Agreement ANSI/BOMA Office Area Square Feet (Aboasf).	Not exempt under the FOIA.	
(12) Lease Structured Parking Spaces	Not exempt under the FOIA.	
(13) Lease Surface Parking Spaces	Not exempt under the FOIA.	
(14) Percentage of Occupancy	Not exempt under the FOIA.	
(15) Annual Rent (Including Rent Structure for Term of Lease).	Not exempt under the FOIA.	
(16) Lessor Name	Not exempt under the FOIA.	
(17) Lessor Address (including City, State, and Postal Code).	Exempt—5 U.S.C. 552(b)(6).	

FOIA REVIEW OF THE CCR DATA FIELDS—Continued

Data field	Exempt status	Public comments
(18) Lessor Phone	Exempt—5 U.S.C. 552(b)(6).	
(19) Lessor Fax	Exempt—5 U.S.C. 552(b)(6).	
(20) Lessor Email	Exempt—5 U.S.C. 552(b)(6).	
(21) Name of Person Signing Lease	Not exempt under the FOIA.	
(22) Name of Person Witnessing Lease Signature.	Not exempt under the FOIA.	
(23) Payee Name	Exempt—5 U.S.C. 552(b)(4).	
(24) Payee Address (including City, State, and Postal Code).	Exempt—5 U.S.C. 552(b)(4).	
(25) Payee Phone	Exempt—5 U.S.C. 552(b)(4).	
(26) Payee Fax	Exempt—5 U.S.C. 552(b)(4).	
(27) Payee Email	Exempt—5 U.S.C. 552(b)(4).	
(28) Unit Price Schedule (Including Itemized Construction Costs for Tenant Buildout Items Such as Drywall Partitioning, Electrical Outlets, Doors, Carpeting, Locks, and Cabinets).	Exempt—5 U.S.C. 522(b)(4).	
(29) HVAC Overtime Rate	Not exempt under the FOIA.	
(30) Corporate Resolution	Exempt—5 U.S.C. 552(b)(4).	
(31) Partnership Agreement	Exempt—5 U.S.C. 552(b)(4).	
(32) Adjustment for Vacant Premises Rate	Not exempt under the FOIA.	
(33) Legal Description of Building	Not exempt under the FOIA.	
(34) Normal Business Hours of Building	Not exempt under the FOIA.	
(35) Agency Name	Exempt—5 U.S.C. 552(b)(5) and (7).	
(36) Floor Plan	Exempt—5 U.S.C. 552(b)(5) and (7).	
(37) Identification of Building Floors Occupied	Not exempt under the FOIA.	
(38) Tax Payer Identification Number	Exempt—5 U.S.C. 552(b)(6).	
(39) Social Security Number	Exempt—5 U.S.C. 552(b)(6).	
(40) DUNS Number	Not exempt under the FOIA.	
(41) DUNS+4	Exempt—5 U.S.C. 552(b)(4).	
(42) Financial Institution	Exempt—5 U.S.C. 552(b)(4).	
(43) Account Number	Exempt—5 U.S.C. 552(b)(4).	
(44) ABA Routing ID	Exempt—5 U.S.C. 552(b)(4).	
(45) Automated Clearing House (ACH) Network U.S. Phone.	Exempt—5 U.S.C. 552(b)(4).	
(46) ACH Non-U.S. Phone	Exempt—5 U.S.C. 552(b)(4).	
(47) ACH Fax	Exempt—5 U.S.C. 552(b)(4).	
(48) ACH E-Mail	Exempt—5 U.S.C. 552(b)(4).	

Dated: July 20, 2012.

John D. Thomas,

Director, Center for Lease Policy.

[FR Doc. 2012–18265 Filed 7–25–12; 8:45 am]

BILLING CODE 6820–23–P

DEPARTMENT OF HEALTH AND HUMAN SERVICES

[Document Identifier OS–0990–0269]

Agency Information Collection Request. 60-Day Public Comment Request

AGENCY: Office of the Secretary, HHS.

In compliance with the requirement of section 3506(c)(2)(A) of the Paperwork Reduction Act of 1995, the Office of the Secretary (OS), Department of Health and Human Services, is publishing the following summary of a proposed information collection request for public comment. Interested persons are invited to send comments regarding this burden estimate or any other aspect of this collection of information, including any of the following subjects: (1) The necessity and utility of the proposed information collection for the proper performance of the agency's functions; (2) the accuracy of the estimated burden; (3) ways to enhance the quality, utility, and clarity of the information to be collected; and (4) the use of automated collection techniques or other forms of information technology to minimize the information collection burden.

To obtain copies of the supporting statement and any related forms for the proposed paperwork collections referenced above, email your request, including your address, phone number, OMB number, and OS document identifier, to *Sherette.funncoleman@hhs.gov*, or call the Reports Clearance Office on (202) 690–6162. Written comments and recommendations for the proposed information collections must be directed to the OS Paperwork Clearance Officer at the above email address within 60-days.

Proposed Project: Complaint Forms for Discrimination; Health Information Privacy Complaints OMB No. 0990–0269—Extension—Office of Civil Rights.

Abstract: The Office for Civil Rights is seeking an extension on an approval for a 3-year clearance on a previous collection. Individuals may file written complaints with the Office for Civil Rights when they believe they have been discriminated against by programs or entities that receive Federal financial assistance from the Health and Human Service or if they believe that their right to the privacy of protected health information has been violated. Annual Number of Respondents: frequency of submission is for record keeping and reporting on occasion.

ESTIMATED ANNUALIZED BURDEN TABLE

Forms	Type of respondent	Number of respondents	Number of responses per respondent	Average burden hours per response	Total burden hours
Civil Rights Complaint Form	Individuals or households, Not-for-profit institutions.	3493	1	45/60	2620
Health Information Privacy Complaint Form.	Individuals or households, Not-for-profit institutions.	10,286	1	45/60	7715
Total					10,335

Keith A.Tucker,

Paperwork Reduction Act Reports Clearance Officer, Office of the Secretary.

[FR Doc. 2012–18214 Filed 7–25–12; 8:45 am]

BILLING CODE 4153–01–P

DEPARTMENT OF HEALTH AND HUMAN SERVICES

International Workshop on Alternative Methods for *Leptospira* Vaccine Potency Testing: State of the Science and the Way Forward

AGENCY: Division of the National Toxicology Program (DNTP), National Institute of Environmental Health Sciences (NIEHS), National Institutes of Health (NIH), HHS.

ACTION: Announcement of a Workshop; Call for Abstract Submissions.

SUMMARY: The NTP Interagency Center for the Evaluation of Alternative Toxicological Methods (NICEATM) announces an ''International Workshop on Alternative Methods for *Leptospira* Vaccine Potency Testing: State of the Science and the Way Forward.'' This workshop, the second in a series of specialized vaccine workshops, will review recent advances and innovations in science and technology that can be applied to *Leptospira* vaccine potency testing. The goal is to promote development of innovative testing methods and approaches that may provide improved accuracy, efficiency, and worker safety and that are more humane and use fewer or no animals. The workshop will also address global acceptance and implementation of scientifically valid alternative methods.

The workshop is open to the public at no charge with attendance limited only by the available space; however, advance registration is required (see **DATES**). NICEATM also invites submission of abstracts for scientific posters for display at the workshop (see **SUPPLEMENTARY INFORMATION**).

DATES: The workshop is scheduled for September 19–21, 2012. Sessions will begin at 1:00 p.m. CDT on September 19 and 8:00 a.m. on September 20 and 21. Sessions will end at approximately 6:00 p.m. on September 19 and 20 and at 1:00 p.m. on September 21. The deadline for registration is September 7, 2012. Due to U.S. Department of Agriculture (USDA) security requirements, onsite registration at the workshop will not be available. The deadline for submission of poster abstracts is August 13, 2012.

ADDRESSES: The workshop will be held at the USDA Center for Veterinary Biologics at the National Centers for Animal Health, 1920 Dayton Avenue Ames, Iowa 50010. Individuals with disabilities who need accommodation to participate in this event should contact Ms. Debbie McCarley at voice telephone: 919–541–2384 or email: *mccarley@niehs.nih.gov.* TTY users should contact the Federal TTY Relay Service at 800–877–8339. Requests should be made at least 5 business days in advance of the event.

FOR FURTHER INFORMATION CONTACT: Dr. William S. Stokes, Director, NICEATM, NIEHS, P.O. Box 12233, Mail Stop: K2–16, Research Triangle Park, NC, 27709, (telephone) 919–541–2384, (fax) 919–541–0947, (email) *niceatm@niehs.nih.gov.* Courier address: NICEATM, NIEHS, Room 2034, 530 Davis Drive Morrisville, NC 27560.

SUPPLEMENTARY INFORMATION:

Background

Leptospirosis is an emerging and widespread bacterial zoonotic disease caused by spirochetes of the genus *Leptospira.* An estimated 500,000 human cases of leptospirosis occur worldwide each year, with a fatality rate of up to 25% in some regions. Designated a Neglected Tropical Disease by the NIH and a Neglected Zoonotic Disease by the World Health Organization, leptospirosis is a global research and public health priority.

Leptospirosis affects numerous animal species including livestock, pets, and wildlife. Vaccines have been developed for most susceptible livestock and domestic pet species and are widely used in the U.S. and other countries. Human *Leptospira* vaccines that protect against region-specific serovars are also available for workers in high-risk professions in selected countries, although none are currently approved for use in the United States.

Regulatory authorities require potency testing prior to release of each production lot of *Leptospira* vaccine to ensure that it will be effective. However, the current testing methods require the use of large numbers of laboratory animals that experience significant unrelieved pain and distress, accounting for over one-third of the animals reported to the USDA in this pain category. A recent international workshop, organized by NICEATM, the Interagency Coordinating Committee on the Validation of Alternative Methods (ICCVAM), and their international partners, identified *Leptospira* vaccines as one of the three highest priorities for future research, development, and validation of alternative test methods that could further reduce, refine (enhance animal well-being and lessen or avoid pain and distress), or replace animal use for vaccine potency testing (Stokes et al., 2011). The USDA has developed and validated *in vitro* enzyme-linked immunosorbent assay (ELISA) antigen quantification methods for potency determination of vaccines for several *Leptospira* serovars (i.e., *Leptospira interrogans* serovars *pomona, canicola, icterohaemorrhagiae,* and *Leptospira kirschneri* serovar *grippotyphosa* [Kulpa-Eddy, 2012; USDA, 2009a, 2009b, 2009c, 2011]).

This workshop, the second in a series of specialized vaccine workshops, will review recent advances and innovations in science and technology that can be applied to the development of new methods and approaches for *Leptospira* vaccine potency testing. These new methods and approaches may provide improved accuracy, efficiency, and worker safety, and would be more humane and use fewer or no animals. Participants will develop a strategy to achieve global acceptance and implementation of scientifically valid alternative methods.

NICEATM and ICCVAM are organizing the workshop in collaboration with partner organizations in the International Cooperation on Alternative Test Methods (ICATM): the European Union Reference Laboratory for Alternatives to Animal Testing (EURL ECVAM), the Japanese Center for the Validation of Alternative Methods, the Korean Center for the Validation of Alternative Methods, and Health Canada. Cosponsors include EURL ECVAM, the Animal Health Institute, the International Alliance for Biological Standardization, and the USDA Center for Veterinary Biologics.

Preliminary Workshop Agenda and Registration

Registration information, draft agenda, and additional meeting information are available on the NICEATM–ICCVAM Web site (*http://iccvam.niehs.nih.gov/meetings/LeptoVaccWksp-2012/LeptoVaccWksp.htm*) and upon request from NICEATM (see **FOR FURTHER INFORMATION CONTACT**).

Call for Abstract Submissions

NICEATM and ICCVAM invite the submission of abstracts for scientific posters to be displayed during this workshop. Guidelines for the submission of abstracts are available at *http://iccvam.niehs.nih.gov/meetings/LeptoVaccWksp-2012/LeptoWksp-AbstractSubmit-508.pdf.* Abstracts must be submitted by email to *niceatm@niehs.nih.gov.* The deadline for abstract submission is August 13, 2012. The corresponding author will be notified regarding the abstract's acceptance within 7 working days of the submission deadline. Guidelines for poster presentations will be sent to the corresponding authors with notification of acceptances.

Background Information on NICEATM and ICCVAM

ICCVAM is an interagency committee composed of representatives from 15 Federal regulatory and research agencies that require, use, generate, or disseminate toxicological and safety testing information. ICCVAM conducts technical evaluations of new, revised, and alternative safety testing methods and integrated testing strategies with regulatory applicability and promotes the scientific validation and regulatory acceptance of testing methods that more accurately assess the safety and hazards of chemicals and products and that reduce, refine, or replace animal use. The ICCVAM Authorization Act of 2000 (42 U.S.C. 285*l*–3) established ICCVAM as a permanent interagency committee of the NIEHS under NICEATM. NICEATM administers ICCVAM, provides scientific and operational support for ICCVAM-related activities, and conducts independent validation studies to assess the usefulness and limitations of new, revised, and alternative test methods and strategies. NICEATM and ICCVAM welcome the public nomination of new, revised, and alternative test methods and strategies applicable to the needs of U.S. Federal agencies. Additional information about ICCVAM and NICEATM can be found on the NICEATM–ICCVAM Web site (*http://iccvam.niehs.nih.gov).*

References

Kulpa-Eddy J. 2012. Successful Development and Validation of an *In Vitro* Replacement Assay for *Leptospira* Vaccine Potency Tests. In: Proceedings of an International Scientific Workshop on Potency Testing of Veterinary Vaccines for Animals: The Way from *In Vivo* to *In Vitro;* Langen, Germany; 1–3 December 2010 (Jungbäck, C, ed.). Basel: Karger.

USDA. 2009a. SAM 624: Supplemental Assay Method for *In Vitro* Potency Testing of *Leptospira interrogans* Serovar *pomona* Bacterins. Washington, DC:USDA Animal and Plant Health Inspection Service. Available: *http://www.aphis.usda.gov/animal_health/vet_biologics/vb_sams_600_series.shtml.*

USDA. 2009b. SAM 625: Supplemental Assay Method for *In Vitro* Potency Testing of *Leptospira interrogans* Serovar *canicola* Bacterins. Washington, DC:USDA Animal and Plant Health Inspection Service. Available: *http://www.aphis.usda.gov/animal_health/vet_biologics/vb_sams_600_series.shtml.*

USDA. 2009c. SAM 627: Supplemental Assay Method for *In Vitro* Potency Testing of *Leptospira interrogans* Serovar *icterohaemorrhagiaea* Bacterins. Washington, DC:USDA Animal and Plant Health Inspection Service. Available: *http://www.aphis.usda.gov/animal_health/vet_biologics/vb_sams_600_series.shtml.*

USDA. 2011. SAM 626: Supplemental Assay Method for *In Vitro* Potency Testing of *Leptospira kirschneri* serogroup *grippotyphosa* Bacterins. Washington, DC:USDA Animal and Plant Health Inspection Service. Available: *http://www.aphis.usda.gov/animal_health/vet_biologics/vb_sams_600_series.shtml.*

Stokes WS, Kulpa-Eddy J, McFarland R. 2011. The International Workshop on Alternative Methods to Reduce, Refine, and Replace the Use of Animals in Vaccine Potency and Safety Testing: introduction and summary. In: International Workshop on Alternative Methods to Reduce, Refine, and Replace the Use of Animals in Vaccine Potency and Safety Testing: State of the Science and Future Directions (Kulpa-Eddy J, McFarland R, Stokes WS, eds). Procedia Vaccinol 5: 1–15.

Dated: July 19, 2012.

John R. Bucher,

Associate Director, National Toxicology Program.

[FR Doc. 2012–18294 Filed 7–25–12; 8:45 am]

BILLING CODE 4140–01–P

DEPARTMENT OF HEALTH AND HUMAN SERVICES

Centers for Disease Control and Prevention

[60Day-12–0666]

Proposed Data Collections Submitted for Public Comment and Recommendations

In compliance with the requirement of Section 3506(c)(2)(A) of the Paperwork Reduction Act of 1995 for opportunity for public comment on proposed data collection projects, the Centers for Disease Control and Prevention (CDC) will publish periodic summaries of proposed projects. To request more information on the proposed projects or to obtain a copy of the data collection plans and instruments, call 404–639–7570 and send comments to Kimberly S. Lane, CDC Reports Clearance Officer, 1600 Clifton Road, MS–D74, Atlanta, GA 30333 or send an email to *omb@cdc.gov.*

Comments are invited on: (a) Whether the proposed collection of information is necessary for the proper performance of the functions of the agency, including whether the information shall have practical utility; (b) the accuracy of the agency's estimate of the burden of the proposed collection of information; (c) ways to enhance the quality, utility, and clarity of the information to be collected; and (d) ways to minimize the burden of the collection of information on respondents, including through the use of automated collection techniques or other forms of information technology. Written comments should be received within 60 days of this notice.

Proposed Project

National Healthcare Safety Network (NHSN) (OMB No. 0920–0666), exp. 01/31/2015—Revision—National Center for Emerging and Zoonotic Infectious Diseases (NCEZID), Centers for Disease Control and Prevention (CDC).

Background and Brief Description

The National Healthcare Safety Network (NHSN) is a system designed to accumulate, exchange, and integrate relevant information and resources among private and public stakeholders to support local and national efforts to

protect patients and promote healthcare safety. Specifically, the data is used to determine the magnitude of various healthcare-associated adverse events and trends in the rates of these events among patients and healthcare workers with similar risks. The data will be used to detect changes in the epidemiology of adverse events resulting from new and current medical therapies and changing risks. The NHSN consists of four components: Patient Safety, Healthcare Personnel Safety, Biovigilance, and Long-Term Care Facility (LTCF). In general, the data reported under the Patient Safety Component protocols are used to (1) determine the magnitude of the healthcare-associated adverse events under study, trends in the rates of events, in the distribution of pathogens, and in the adherence to prevention practices, and (2) to detect changes in the epidemiology of adverse events resulting from new medical therapies and changing patient risks. Additionally, reported data will be used to describe the epidemiology of antimicrobial use and resistance and to understand the relationship of antimicrobial therapy to this growing problem. Under the Healthcare Personnel Safety Component protocols, data on events, both positive and adverse, are used to determine (1) the magnitude of adverse events in healthcare personnel and (2) compliance with immunization and sharps injuries safety guidelines. Under the Biovigilance Component, data on adverse reactions and incidents associated with blood transfusions are used to provide national estimates of adverse reactions and incidents. The Long-Term Care Facility (LTCF) Component is used to more specifically and appropriately capture data from the residents of skilled nursing facilities. Surveillance methods and definitions for this component specifically address the nuances of LTCF residents.

This revision submission includes major revisions to the Patient Safety Component—Outpatient Dialysis Center Practices Survey (Form 57.104) in an effort to provide further clarification to those collecting the information. Additionally, some of the changes have been made to improve surveillance data available for the outpatient dialysis population. Due to the CMS End Stage Renal Disease (ESRD) Quality Improvement Program (QIP) reporting requirements, over 5,700 dialysis facilities have already enrolled or will enroll into NHSN to report data in 2012. Form 57.104 is completed by each facility upon enrollment into NHSN and then every January thereafter.

Furthermore, minor revisions have been made to 28 other forms within the package to clarify and/or update surveillance definitions. Six forms have been removed for the purposes of simplification from the Healthcare Personnel Safety Component of the package due to changes within NHSN reporting of healthcare personnel influenza vaccination. Old functionality of individual level vaccination reporting will be removed from NHSN. CMS Inpatient Quality Reporting (IQR) requirements designate that all acute care facilities will report healthcare personnel vaccination counts at the summary level for the 2012–2013 flu season.

The previously approved NSHN package included 54 individual collection forms; the current revision request removes six forms for a total of 48 forms. The reporting burden will decrease by 415,523 hours, for a total of 3,562,653 hours.

Healthcare institutions that participate in NHSN report their data to CDC using a web browser based technology for data entry and data management. Data are collected by trained surveillance personnel using written standardized protocols. Participating institutions must have a computer capable of supporting an Internet service provider (ISP) and access to an ISP. There is no cost to respondents other than their time.

ESTIMATE OF ANNUALIZED BURDEN HOURS

Form number and name	Type of respondents	Number of respondents	Number of responses per respondent	Avg. Burden per response (in hours)	Total burden (in hours)
57.100: NHSN Registration Form	Registered Nurse (Infection Preventionist).	2,000	1	5/60	167
57.101: Facility Contact Information	Registered Nurse (Infection Preventionist).	2,000	1	10/60	333
57.103: Patient Safety Component—Annual Hospital Survey.	Registered Nurse (Infection Preventionist).	6,000	1	30/60	3,000
57.104: Patient Safety Component—Outpatient Dialysis Center Practices Survey.	Registered Nurse (Infection Preventionist).	5,700	1	1.5	8,550
57.105: Group Contact Information	Registered Nurse (Infection Preventionist).	6,000	1	5/60	500
57.106: Patient Safety Monthly Reporting Plan.	Registered Nurse (Infection Preventionist).	10,000	12	35/60	70,000
57.108: Primary Bloodstream Infection (BSI).	Registered Nurse (Infection Preventionist).	6,000	36	35/60	126,000
57.109: Dialysis Event	Staff RN	5,700	60	16/60	91,200
57.111: Pneumonia (PNEU)	Registered Nurse (Infection Preventionist).	6,000	72	32/60	230,400
57.112: Ventilator-Associated Event	Registered Nurse (Infection Preventionist).	6,000	144	25/60	360,000
57.114: Urinary Tract Infection (UTI)	Infection Preventionist	6,000	27	32/60	86,400
57.116: Denominators for Neonatal Intensive Care Unit (NICU).	Staff RN	6,000	9	3	162,000
57.117: Denominators for Specialty Care Area (SCA)/Oncology (ONC).	Staff RN	6,000	9	5	270,000
57.118: Denominators for Intensive Care Unit (ICU)/Other locations (not NICU or SCA).	Staff RN	6,000	18	5	540,000
57.119: Denominator for Outpatient Dialysis.	Staff RN	5,700	12	6/60	6,840

ESTIMATE OF ANNUALIZED BURDEN HOURS—Continued

Form number and name	Type of respondents	Number of respondents	Number of responses per respondent	Avg. Burden per response (in hours)	Total burden (in hours)
57.120: Surgical Site Infection (SSI)	Registered Nurse (Infection Preventionist).	6,000	36	32/60	115,200
57.121: Denominator for Procedure	Staff RN	6,000	540	5/60	270,000
57.123: Antimicrobial Use and Resistance (AUR)-Microbiology Data Electronic Upload Specification Tables.	Laboratory Technician	6,000	12	5/60	6,000
57.124: Antimicrobial Use and Resistance (AUR)-Pharmacy Data Electronic Upload Specification Tables.	Pharmacy Technician	6,000	12	5/60	6,000
57.125: Central Line Insertion Practices Adherence Monitoring.	Registered Nurse (Infection Preventionist).	1,000	100	5/60	8,333
57.126: MDRO or CDI Infection Form.	Registered Nurse (Infection Preventionist).	6,000	72	32/60	230,400
57.127: MDRO and CDI Prevention Process and Outcome Measures Monthly Monitoring.	Registered Nurse (Infection Preventionist).	6,000	24	10/60	24,000
57.128: Laboratory-identified MDRO or CDI Event.	Registered Nurse (Infection Preventionist).	6,000	240	15/60	360,000
57.130: Vaccination Monthly Monitoring Form–Summary Method.	Registered Nurse (Infection Preventionist).	6,000	5	14	420,000
57.131: Vaccination Monthly Monitoring Form–Patient-Level Method.	Registered Nurse (Infection Preventionist).	2,000	5	2	20,000
57.133: Patient Vaccination	Registered Nurse (Infection Preventionist).	2,000	250	10/60	83,333
57.137: Long-Term Care Facility Component—Annual Facility Survey.	Registered Nurse (Infection Preventionist).	250	1	45/60	188
57.138: Laboratory-identified MDRO or CDI Event for LTCF.	Registered Nurse (Infection Preventionist).	250	8	15/60	500
57.139: MDRO and CDI Prevention Process Measures Monthly Monitoring for LTCF.	Registered Nurse (Infection Preventionist).	250	12	5/60	250
57.140: Urinary Tract Infection (UTI) for LTCF.	Registered Nurse (Infection Preventionist).	250	9	30/60	1,125
57.141: Monthly Reporting Plan for LTCF.	Registered Nurse (Infection Preventionist).	250	12	5/60	250
57.142: Denominators for LTCF Locations.	Registered Nurse (Infection Preventionist).	250	12	3	9,000
57.143: Prevention Process Measures Monthly Monitoring for LTCF.	Registered Nurse (Infection Preventionist).	250	12	5/60	250
57.150: LTAC Annual Survey	Registered Nurse (Infection Preventionist).	400	1	30/60	200
57.151: Rehab Annual Survey	Registered Nurse (Infection Preventionist).	1,000	1	25/60	417
57.200: Healthcare Personnel Safety Component Annual Facility Survey.	Occupational Health RN/Specialist	100	1	8	800
57.203: Healthcare Personnel Safety Monthly Reporting Plan.	Occupational Health RN/Specialist	100	9	10/60	150
57.204: Healthcare Worker Demographic Data.	Occupational Health RN/Specialist	100	200	20/60	6,667
57.205: Exposure to Blood/Body Fluids.	Occupational Health RN/Specialist	100	50	1	5,000
57.206: Healthcare Worker Prophylaxis/Treatment.	Occupational Health RN/Specialist	100	30	15/60	750
57.207: Follow-Up Laboratory Testing.	Laboratory Technician	100	50	15/60	1,250
57.210: Healthcare Worker Prophylaxis/Treatment-Influenza.	Occupational Health RN/Specialist	600	50	10/60	5,000
57.300: Hemovigilance Module Annual Survey.	Medical/Clinical Laboratory Technologist.	500	1	2	1,000
57.301: Hemovigilance Module Monthly Reporting Plan.	Medical/Clinical Laboratory Technologist.	500	12	2/60	200
57.302: Hemovigilance Module Monthly Incident Summary.	Medical/Clinical Laboratory Technologist.	500	12	2	12,000
57.303: Hemovigilance Module Monthly Reporting Denominators.	Medical/Clinical Laboratory Technologist.	500	12	30/60	3,000
57.304: Hemovigilance Adverse Reaction.	Medical/Clinical Laboratory Technologist.	500	120	10/60	10,000

ESTIMATE OF ANNUALIZED BURDEN HOURS—Continued

Form number and name	Type of respondents	Number of respondents	Number of responses per respondent	Avg. Burden per response (in hours)	Total burden (in hours)
57.305: Hemovigilance Incident	Medical/Clinical Laboratory Technologist.	500	72	10/60	6,000
Total Est Annual Burden Hours	.....	.....	.....	.....	3,562,653

Dated: July 3, 2012.

Kimberly S. Lane,

Deputy Director, Office of Scientific Integrity, Office of the Associate Director for Science, Office of the Director, Centers for Disease Control and Prevention.

[FR Doc. 2012–17987 Filed 7–25–12; 8:45 am]

BILLING CODE 4163–18–P

DEPARTMENT OF HEALTH AND HUMAN SERVICES

Centers for Disease Control and Prevention

Statement of Organization, Functions, and Delegations of Authority

Part C (Centers for Disease Control and Prevention) of the Statement of Organization, Functions, and Delegations of Authority of the Department of Health and Human Services (45 FR 67772–76, dated October 14, 1980, and corrected at 45 FR 69296, October 20, 1980, as amended most recently at 77 FR 27070–27071, dated May 8, 2012) is amended to reorganize the Human Capital and Resources Management Office, Office of the Chief Operating Officer, Centers for Disease Control and Prevention.

Section C–B, Organization and Functions, is hereby amended as follows:

Delete in its entirety the titles and functional statements for the Human Capital and Resources Management Office (CAJQ) and insert the following:

Human Capital and Resources Management Office (CAJ0). (1) Provides leadership, policy formation, oversight, guidance, service, and advisory support and assistance to the Centers for Disease Control and Prevention (CDC) and the Agency for Toxic Substances and Disease Registry (ATSDR); (2) collaborates as appropriate, with the CDC Office of the Director (OD), Centers/Institute/Offices (CI0s), domestic and international agencies and organizations; and provides a focus for short- and long-term planning within the Human Capital and Resource Management Office (HCRM0); (3) develops and administers human capital and human resource management policies; (4) serves as the business steward for all CDC developed human capital and human resources management systems and applications; (5) develops, maintains, and supports information systems to conduct personnel activities and provide timely information and analyses of personnel and staffing to management and employees; (6) conducts and coordinates human resources management for civil service and Commissioned Corps personnel; (7) manages the administration of fellowship programs; (8) conducts recruitment, special emphasis, staffing, position classification, position management, pay and leave administration, work-life programs, performance management, employee training and development, and employee and labor relations programs; (9) maintains personnel records and reports, and processes personnel actions and documents; (10) administers the federal life and health insurance programs; (11) administers employee recognition, suggestion, and incentive awards programs; (12) furnishes advice and assistance in the processing of workers compensation claims; (13) interprets standards of conduct regulations, reviewing financial disclosure reports, and offer ethics training and counseling services to CDC employees; (14) maintains liaison with the Department of Health and Human Services (HHS) and the Office of Personnel Management (OPM) on human resources management, policy, compliance and execution of the Human Capital Assessment and Accountability Framework (HCAAF); (15) conducts organizational assessments to determine compliance with human capital policies, guidance, regulatory and statutory requirements of federal human capital and resource management programs and initiatives; (16) plans, directs, and manages CDC-wide training programs, monitors compliance with mandatory training requirements, and maximizes economies of scale through systematic planning and valuation of agency-wide training initiatives to assist employees in achieving required competencies; (17) assists in the definition and analysis of training needs and develops and evaluates instructional products designed to meet those needs; (18) develops, designs, and implements a comprehensive leadership and career management program for all occupational series throughout CDC; (19) provides technical assistance in organizational development, career management, employee development, and training; (20) collaborates and works with partners, internally and externally, to develop workforce goals and a strategic vision for the public health workforce; and (21) provides support for succession planning, forecasting services, and environmental scanning to ascertain both current and future public health workforce needs.

Office of the Director (CAJQ1). (1) Provides leadership and overall direction for HCRMO; (2) develops goals and objectives, and provides leadership, policy formation, oversight, and guidance in program planning and development; (3) plans, coordinates, and develops strategic plans for HCRMO; (4) develops and administers human capital and human resource management policies and procedures; (5) coordinates all program reviews; (6) reviews, prepares, coordinates, and develops proposed legislation, Congressional testimony, and briefing materials; (7) establishes performance metrics and coordinates quarterly reviews to ascertain status on meeting of the metrics; (8) coordinates budget formulation, negotiation, and execution of financial resources; (9) identifies relevant scanning/benchmarking on workforce and career development processes, services and products; (10) provides leadership and guidance on new developments and national trends for public health workforce; (11) establishes and oversees policies governing human capital and human resources management, and works collaboratively within CDC and other components in planning, developing and implementing policies; (12) develops strategic plans for information technology and information systems required to support human capital and human resources management information requirements; (13) serves as

the business steward for CDC-wide human capital and human resources administrative systems and advocates and supports the commitment of resources to application development; (14) coordinates HCRMO information resource management activities with the Management Information Systems Office and the related governance groups; (15) coordinates management information systems and analyses of data for improved utilization of resources; (16) serves as a liaison with HHS on the utilization and deployment of centralized HHS human capital and human resource management systems and applications; (17) interprets standards of conduct regulations, reviewing financial disclosure reports, and offers ethics training and counseling services to CDC employees; and (18) conducts demographic analysis of the CDC work force and publishes results in management reports.

Ethics Program Activity (CAJQ12). (1) Provides leadership for the CDC Ethics program activity in accordance with conflict of interest statutes at Title 18 U.S.C. Chapter 11 and standards of conduct regulation at 5 CFR Part 2635; (2) serves as a liaison with the Office of Government Ethics (OGE) and HHS on ethics matters; (3) interprets standards of conduct regulations; (4) reviews financial disclosure reports for potential conflicts of interest; (5) provides continuing ethics training and counseling services; (6) counsels employees on a variety of ethics issues to ensure that CDC employees avoid situations that could violate ethics laws and undermine the public's trust in Government; and (7) reviews and approves outside activity, official duty, and award requests for employees.

Commissioned Corps Activity (CAJQ14). (1) Serves as the primary contact for CDC management and employees in obtaining the full range of personnel assistance and management services for Commissioned Corps personnel; (2) provides leadership, technical assistance, guidance, and consultation in benefits, entitlements, and obligations of the Commissioned Corps to commissioned officers; (3) plans, directs, and manages the Department of Defense's Defense Eligibility Enrollment Report System (DEERS) identification card program for all active duty officers, retirees, and eligible dependents; (4) implements and evaluates Commissioned Corps policies and systems such as salary/benefits, performance management, assignments, health benefits, training, travel, relocation, and retirement; (5) manages the CDC's Commissioned Corps promotion and awards programs; (6) maintains liaison and coordinates personnel services for Commissioned Corps personnel with the Office of Commissioned Corps Operations and the Office of Surgeon General; (7) coordinates the agency deployment status of commissioned officers assigned to CDC and manages the Emergency Operation Centers (EOC) Commissioned Corps deployment desk during activation of the CDC EOC; and (8) establishes and maintains personnel and payroll records and files.

Policy and Communications Activity (CAJQ15). (1) Provides leadership, oversight, guidance and support for policy and communication activities supporting HCRMO; (2) develops, administers and monitors the implementation of human capital and human resources management policies and operational procedures as directed by OPM, HHS, CDC or other pertinent federal agencies to ensure consistent application across CDC; (3) serves as the focal point for the analysis, development, technical review and clearance of controlled correspondence and non-scientific policy documents that require approval/signature from the HCRMO Director or other senior CDC leadership; (4) responds to and coordinates requests from the Office of the Director for issues management information to ensure efficient responses to the Director's priority issues; (5) provides and manages a wide range of communication services in support of HCRMO; (6) facilitates open and transparent employee communication; (7) develops and implements internal and external public relations strategies to communicate upward and outward to customers, partners, and other stakeholders; and (8) utilizes multiple channels and methods to communicate and disseminate HCRMO policies, announcements, procedures, information, and other relevant messages.

Operations Management Activity (CAJQ17). (1) Provides leadership, oversight, and guidance in the management and operations of HCRMO programs; (2) provides and oversees the delivery of HCRMO-wide administrative management and support services in the areas of fiscal management, personnel, travel, records management, internal controls, and other administrative services; (3) prepares annual budget formulation and budget justifications; (4) coordinates HCRMO requirements relating to contracts, grants, cooperative agreements, and reimbursable agreements; (5) develops and implements administrative policies, procedures, and operations, as appropriate, for HCRMO, and prepares special reports and studies, as required, in the administrative management areas; and (6) maintains liaison with related staff offices and other officials of CDC.

Strategic Programs Office (CAJOB). (1) Provides a broad array of strategic programs, workforce support, and development services; (2) develops and implements methodologies to measure, evaluate, and improve human capital results to ensure mission alignment; (3) assesses and evaluates the overall effectiveness and compliance of human resources programs and policies related to merit-based decision-making and compliance with laws and regulations; (4) provides targeted and strategic technical assistance in organizational development, career management, employee development, and training to CDC CIOs; (5) works with OPM, HHS, and CDC Governance Boards and agency managers to carry out human capital management planning and development activities; (6) establishes, coordinates, develops, and monitors implementation of human capital initiatives and the agency Strategic Human Capital Management Plan; (7) manages recruitment, outreach, and oversight of the Oak Ridge Institute for Science and Education (ORISE), Guest Researcher, Student Interns, and Fellowship programs to meet customer strategic human capital management needs; (8) provides recruitment, retention, consultation and support to customers, including strategies and resources available to effectively recruit, retain, and plan for the succession of employees; (9) facilitates the hiring of members from underrepresented groups, ensuring a more prepared, diverse, and sustainable workforce; (10) conducts organizational evaluations and audits to determine regulatory compliance and adherence to merit system principles utilizing the Human Capital Assessment and Accountability Framework (HCAAF); (11) serves as the liaison to HHS in the development, maintenance, and support of Department-wide human resource information systems and; applications; (12) serves as a business steward for all CDC developed human capital and human resources management systems and applications; (13) facilitates the administration, analysis, reporting and recommendations for improvement in regards to annual employee surveys; (14) supports reporting requirements with Office of Management and Budget (OMB) Annual Performance Report and Performance Plan; (15) provides business strategy, data analytics, and reporting services; (16) performs analysis, forecasting, and modeling to

interpret quantitative and qualitative data; (17) reports and evaluates organizational performance outcomes on key measures and metrics; and (18) manages workload and workflow activities for service optimization.

CDC University Office (CAJQC). (1) Provides agency-wide leadership and guidance in all functional areas related to training and career development; (2) designs, develops, implements and evaluates a comprehensive strategic human resource leadership and career training and development program for all occupational series throughout CDC; (3) develops and implements training strategies and activities that contribute to the agency's mission, goals and objectives; (4) maximizes economies of scale through systematic planning, administration, delivery, and evaluation of agency-wide training initiatives to assist CDC employees in achieving required competencies; (5) development of retraining activities for CDC managers/employees affected by organizational changes (e.g. major reorganizations, outsourcing initiatives, etc.); (6) maintains employee training records; (7) develops and validates occupational and functional competencies and develops related training plans and career maps; (8) develops and administers professional development programs; (9) administers and monitors the Training and Learning Management System for compliance with the Government Employees Training Act; (10) conducts training needs assessment of employees, provides analysis and data to correlate individual training with strategic plans; (11) develops and maintains assessment tools to identify core competency requirements for each occupational series throughout the agency; (12) provides consultation, guidance, and technical assistance to managers and employees in organizational development, career management, employee development, and training; (13) develops and delivers education and training programs to meet the identified needs of the workforce; (14) promotes, develops, and implements training needs assessment methodology to establish priorities for training interventions; (15) collaborates, as appropriate, with the CDC/OD, CIOs, HHS, OPM and other domestic and international agencies and organizations; and (16) develops and implements policies related to employee training.

Career Development Activity (CAJQC2). (1) Designs, develops, implements and evaluates training activities to increase competency in the area of career development strategies; (2) maximizes economies of scale through systematic planning, administration, delivery, and evaluation of agency-wide training initiatives to assist CDC employees in achieving required competencies; (3) development of retraining activities for CDC managers/employees affected by organizational changes (e.g. major reorganizations, outsourcing initiatives, etc.); (4) maintains employee training records; (5) develops and validates occupational and functional competencies and develops related training plans and career maps; (6) develops and administers professional development programs to include mentoring and coaching for enhanced performance; (7) conducts training needs assessment of employees, provides analysis and data to correlate individual training with strategic plans; (8) develops and maintains assessment tools to identify core competency requirements for each occupational series throughout the agency; (9) provides consultation, guidance, and technical assistance to managers and employees in organizational development, career management, employee development, and training; (10) promotes, develops, and implements training needs assessment methodology to establish priorities for training interventions; (11) collaborates, as appropriate, with the CDC/OD, CIOs, HHS, OPM and other domestic and international agencies and organizations; and (12) implements procedural components in compliance to the long term education training policy.

Leadership Development Activity (CAJQC3). (1) Designs, develops, implements and evaluates a comprehensive leadership development curriculum for leaders at all levels throughout CDC; (2) develops and implements leadership training strategies and activities that contribute to the agency's mission, goals and objectives; (3) maximizes economies of scale through systematic planning, administration, delivery, and evaluation of agency-wide training initiatives to assist CDC employees in achieving required competencies; (4) maintains employee training records; (5) develops and administers professional development programs such as executive coaching; (6) provides consultation, guidance, and technical assistance to managers and employees around leadership training and development activities; (7) develops and delivers education and training programs to meet the identified needs of the workforce; (8) collaborates, as appropriate, with the CDC/OD, CIOs, HHS, OPM and other domestic and international agencies and organizations; and (9) implements procedural components in compliance to the mandatory supervisory training requirements policy.

Public Health Training Activity (CAJOC4). (1) Designs, develops, implements and evaluates a comprehensive public health training curriculum for employees engaged in public health activities throughout CDC; (2) develops and implements public health, science, research and medicine and preparedness and emergency response training strategies and activities that contribute to the agency's mission, goals and objectives; (3) maximizes economies of scale through systematic planning, administration, delivery, and evaluation of agency-wide training initiatives to assist CDC employees in achieving required competencies; (4) maintains employee training records; (5) provides consultation, guidance, and technical assistance to managers and employees associated within curriculum scope; (6) develops and delivers education and training programs to meet the identified needs of the workforce; and (7) collaborates, as appropriate, with the CDC/OD, CIOs, HHS, OPM and other domestic and international agencies and organizations.

Business and Technology Training Activity (CAJQC5). (1) Designs, develops, implements and evaluates a comprehensive business and technology training curriculum for employees throughout CDC; (2) develops and implements financial, acquisition and project management, communication and office skills and information technology training strategies and activities that contribute to the agency's mission, goals and objectives; (3) maximizes economies of scale through systematic planning, administration, delivery, and evaluation of agency-wide training initiatives to assist CDC employees in achieving required competencies; (4) maintains employee training records; (5) provides consultation, guidance, and technical assistance to managers and employees associated within curriculum scope; (6) develops and delivers education and training programs to meet the identified needs of the workforce; (7) collaborates, as appropriate, with the CDC/OD, CIOs, HHS, OPM and other domestic and international agencies and organizations.

Workforce Relations Office (CAJQD). (1) Provides leadership, technical assistance, guidance, and consultation on employee and labor relations,

employee services and assistance, work-life programs, performance management, incentive awards, pay, leave and benefits administration; on-the-job injuries and exposures to infectious diseases; debt complaints; and other job-related issues; (2) develops and administers labor-management and employee relations program including: disciplinary actions, grievances and appeals, labor negotiations, collective bargaining, management representation before third parties, and partnership activities; (3) serves as liaison with the Office of Safety Health and Environment and other CDC staff for personnel matters relating to substance abuse and other employee assistance programs; (4) coordinates and processes garnishment, child support, and other collection actions for CDC employees; (5) plans, directs, coordinates, and conducts contract negotiations on behalf of agency management with labor organizations holding exclusive recognition; (6) represents management in third party proceedings involving labor and employee relations issues; (7) serves as the authority to ensure validity, consistency, and legality of employee relations matters concerning grievances (both negotiated and agency procedures), disciplinary actions, adverse actions, and resultant third party hearings; (8) plans and coordinates all programmatic activities to include preparation of disciplinary and adverse action letters and all final agency decisions in grievances and appeals; (9) provides technical advice, consultation, and training on matters of employee conduct and performance; (10) provides consultation, guidance, and technical advice to human resources specialists, managers, and employees on the development, coordination and implementation of all work-life program initiatives; (11) provides personnel services relating to on-the-job injuries and exposures to infectious diseases; (12) facilitates the development and implementation of an Agency-wide strategic approach to monitoring, evaluating, aligning, and improving performance management policies and practices for all CDC performance management systems (Title 5, Title 42, Senior Executive Service (SES), Senior Biomedical Research Service (SBRS), and the Commissioned Officer Effectiveness Report (COER); (13) coordinates performance management, strategic rewards and recognition programs and systems; (14) provides human resources services and assistance on domestic and international employee benefits and leave administration; (15) serves as liaison between CDC and the HHS payroll office resolving discrepancies with pay and leave; (16) administers the leave donor program and processes time and attendance amendments; (17) administers the federal life and health insurance programs; (18) provides policy guidance and technical advice and assistance on retirement, the Thrift Savings Plan, health/life insurance, and savings bonds; (19) furnishes advice and assistance in the processing of Office of Workers' Compensation Program claims and the Voluntary Leave Donation Program; and (20) administers and maintains the customer service help desk.

Employee and Labor Relations Activity (CAJQD2). (1) Provides leadership, technical assistance, guidance, and consultation on employee and labor relations, employee services; (2) develops and administers labor-management and employee relations program including: disciplinary actions, grievances and appeals, labor negotiations, collective bargaining, management representation before third parties, and partnership activities; (3) serves as liaison with the Office of Safety Health and Environment and other CDC staff for personnel matters relating to substance abuse and other employee assistance programs; (4) coordinates and processes garnishment, child support, and other collection actions for CDC employees; (5) plans, directs, coordinates, and conducts contract negotiations on behalf of agency management with labor organizations holding exclusive recognition; (6) represents management in third party proceedings involving labor and employee relations issues; (7) serves as the authority to ensure validity, consistency, and legality of employee relations matters concerning grievances (both negotiated and agency procedures), disciplinary actions, adverse actions, and resultant third party hearings; (8) plans and coordinates all programmatic activities to include preparation of disciplinary and adverse action letters and all final agency decisions in grievances and appeals; (9) provides technical advice, consultation, and training on matters of employee conduct and performance; and (10) provides consultation, guidance, and technical advice to human resources specialists, managers, and employees on the development.

Employee Benefits, Worklife Programs and Payroll Activity (CAJQD3). (1) Provides consultation, guidance, and technical advice to human resources specialists, managers, and employees on the development, coordination and implementation of all Work-Life program initiatives; (2) provides personnel services relating to on-the-job injuries and exposures to infectious diseases; (3) provides human resources services and assistance on domestic and international employee benefits and leave administration; (4) serves as liaison between CDC and the HHS payroll office resolving discrepancies with pay and leave; (5) administers the leave donor program and processes time and attendance amendments; (6) administers the federal life and health insurance programs; (7) provides policy guidance and technical advice and assistance on retirement, the Thrift Savings Plan, health/life insurance, and savings bonds; and (8) furnishes advice and assistance in the processing of Office of Workers' Compensation Program claims and the Voluntary Leave Donation Program.

Performance Management, Strategic Rewards and Recognitions Activity (CAJQD4). (1) Facilitates the development and implementation of an Agency-wide strategic approach to monitoring, evaluating, aligning, and improving performance management policies and practices for all CDC performance management systems (Title 5, Title 42, SES, SBRS, and the COER); and (2) coordinates performance management, strategic rewards and recognition programs and systems.

Customer Service Help Desk Activity (CAJQD5). (1) Provides technical assistance, guidance, and consultation on employee and labor relations, employee services, pay, leave and benefits administration; staffing and recruitment, position classification; and (2) administers and maintains the customer service help desk.

Client Services Office (CAJQE). (1) Serves as the primary contact for CDC management and employees in obtaining the full range of personnel assistance and management services for civil service personnel; (2) provides leadership, technical assistance, guidance, and consultation in human resource utilization, position management, classification and pay administration, recruitment, staffing, placement, reorganizations, program evaluation, and personnel records and files management; (3) maintains liaison with HHS and OPM in the area of human resources management; (4) provides leadership in identifying the CIO recruiting needs, and assesses, analyzes, and assists CDC programs in developing and executing short- and long-range hiring plans to meet these needs; (5) provides guidance to CDC organizations in the development of staffing plans and job analyses,

evaluating/classifying position descriptions, conducting position management studies, and responding to desk audit requests; (6) processes personnel actions by determining position classification, issuing vacancy announcements, assisting in development of selection criteria, conducting examining under delegated examining authority, conducting candidate rating and ranking under CDC Merit Promotion Plan, making qualification determinations, determining pay, conducting reductions-in-force, effecting appointments and processing other actions; (7) codes and finalizes all personnel actions in the automated personnel data system; personnel action processing, data quality control/assessment, and files/records management; (8) conducts new employee orientation; (9) plans, develops, implements, and evaluates systems to ensure consistently high quality human resources services; (10) establishes objectives, standards, and internal controls; (11) evaluates, analyzes, and makes recommendations to improve personnel authorities, policies, systems, operations, and procedures; (12) manages various staffing programs such as the CDC summer program, Priority Placement Program, Priority Consideration Program, the Interagency Career Transition Assistance Program, and the Career Transition Assistance Program and other special emphasis programs; (13) provides consultation, guidance, and technical advice on recruitment and special emphasis policies, practices, and procedures, including search committees; strategizes on the best approach to recruitment at specific events, and designs and develops recruitment materials for events; (14) establishes and maintains personnel records, files, and controls; (15) establishes and maintains the official personnel files system and administers personnel records storage and disposal program; (16) collaborates with Personnel Security in initiating suitability background checks and fingerprints for all CDC personnel; (17) responds to employment verification inquiries; and (18) administers the Special Emphasis Programs and Student Intern/Fellowship Programs.

Customer Staffing Activity 1 (CAJQE2). The Activity supports the Centers for Disease Control, Office of the Director, Business Services Offices, Staff Offices, Office of Public Health Preparedness and Response, Office of Surveillance, Epidemiology and Laboratory Services, Office of State, Tribal, Local and Territorial Support, by performing the following: (1) Provides leadership in identifying CIO recruiting needs, and assesses, analyzes, and assists CDC programs in developing and executing short- and long-range hiring plans to meet these needs; (2) provides guidance to CDC organizations in the development of staffing plans and job analyses; (3) processes personnel actions by issuing vacancy announcements, assisting in development of selection criteria, conducting examining under delegated examining authority, conducting candidate rating and ranking under CDC Merit Promotion Plan, making qualification determinations, determining pay, conducting reductions-in-force, effecting appointments and processing other actions; (4) plans, develops, implements, and evaluates systems to ensure consistently high quality human resources services; (5) establishes objectives, standards, and internal controls; (6) evaluates, analyzes, and makes recommendations to improve personnel authorities, policies, systems, operations, and procedures; and (7) provides consultation, guidance, and technical advice on recruitment and special emphasis policies, practices, and procedures, including search committees; strategizes on the best approach to recruitment at specific events, and designs and develops recruitment materials for events.

Customer Staffing Activity 2 (CAJQE3). The Activity supports the Office of Non-communicable Diseases, Injury and Environmental Health and Subordinate Centers, Agency for Toxic Substances and Disease Registry and National Institute for Occupational Safety and Health, by performing the following: (1) Provides leadership in identifying CIO recruiting needs, and assesses, analyzes, and assists CDC programs in developing and executing short- and long-range hiring plans to meet these needs; (2) provides guidance to CDC organizations in the development of staffing plans and job analyses; (3) processes personnel actions by issuing vacancy announcements, assisting in development of selection criteria, conducting examining under delegated examining authority, conducting candidate rating and ranking under CDC Merit Promotion Plan, making qualification determinations, determining pay, conducting reductions-in-force, effecting appointments and processing other actions; (4) plans, develops, implements, and evaluates systems to ensure consistently high quality human resources services; (5) establishes objectives, standards, and internal controls; (6) evaluates, analyzes, and makes recommendations to improve personnel authorities, policies, systems, operations, and procedures; and (7) provides consultation, guidance, and technical advice on recruitment and special emphasis policies, practices, and procedures, including search committees; strategizes on the best approach to recruitment at specific events, and designs and develops recruitment materials for events.

Customer Staffing Activity 3 (CAJQE4). The Activity supports the Center for Global Health, Office of Infectious Diseases and Subordinate Centers by performing the following: (1) Provides leadership in identifying CIO recruiting needs, and assesses, analyzes, and assists CDC programs in developing and executing short- and long-range hiring plans to meet these needs; (2) provides guidance to CDC organizations in the development of staffing plans and job analyses; (3) processes personnel actions by issuing vacancy announcements, assisting in development of selection criteria, conducting examining under delegated examining authority, conducting candidate rating and ranking under CDC Merit Promotion Plan, making qualification determinations, determining pay, conducting reductions-in-force, effecting appointments and processing other actions; (4) plans, develops, implements, and evaluates systems to ensure consistently high quality human resources services; (5) establishes objectives, standards, and internal controls; (6) evaluates, analyzes, and makes recommendations to improve personnel authorities, policies, systems, operations, and procedures; and (7) provides consultation, guidance, and technical advice on recruitment and special emphasis policies, practices, and procedures, including search committees; strategizes on the best approach to recruitment at specific events, and designs and develops recruitment materials for events.

Classification and Advisory Activity (CAJQE5). (1) Provides leadership, technical assistance, guidance, and consultation in human resource utilization, position management, classification and pay administration; (2) provides leadership in identifying CIO classification and position management needs; (3) provides guidance to CDC/ATSDR organizations in the development, evaluation/classification of position descriptions; (4) conducts position management

studies and responds to desk audit requests; (5) codes and finalizes all personnel actions in the automated personnel data system; data quality control/assessment, and files/records management; and (6) reviews all CDC/ATSDR reorganization proposals and provides advice on proposed staffing plans and organizational structures.

Technical Services Activity (CAJOE6). (1) Processes personnel actions by determining pay, conducting reductions-in-force, effecting appointments and processing other actions; (2) codes and finalizes all personnel actions in the automated personnel data system; personnel action processing, data quality control/assessment, and files/records management; (3) conducts new employee orientation; (4) establishes objectives, standards, and internal controls; (5) evaluates, analyzes, and makes recommendations to improve personnel authorities, policies, systems, operations, and procedures; (6) establishes and maintains personnel records, files, and controls; (7) establishes and maintains the official personnel files system and administers personnel records storage and disposal program; (8) collaborates with Personnel Security in initiating suitability background checks and fingerprints for all CDC personnel; and (9) responds to employment verification inquiries.

Customer Staffing Activity 4 (CAJQE7). The Activity supports the recruitment and staffing services for CDC's international workforce by performing the following: (1) Provides leadership in identifying the CDC international workforce recruiting needs, and assesses, analyzes, and assists programs in developing and executing short- and long-range hiring plans to meet these needs; (2) provides guidance to CDC in the development of staffing plans and job analyses; (3) processes personnel actions by issuing vacancy announcements, assisting in development of selection criteria, conducting examinations under delegated examining authority, conducting candidate rating and ranking under CDC Merit Promotion Plan, making qualification determinations, determining pay, conducting reductions-in-force, effecting appointments and processing other actions; (4) plans, develops, implements, and evaluates systems to ensure consistently high quality human resources services; (5) establishes objectives, standards, and internal controls; (6) evaluates, analyzes, and makes recommendations to improve personnel authorities, policies, systems, operations, and procedures; (7) provides consultation, guidance, and technical advice on recruitment and special emphasis policies, practices, and procedures, including search committees; strategizes on the best approach to recruitment at specific events, and designs and develops recruitment materials for events; (8) coordinates the provision of benefits, allowances, special pay requirements, labor and employee relations support services; (9) consults with the Department of State on utilization of authorities to hire locally employed staff and coordination of records management requirements.

Executive and Scientific Resources Office (CAJQG). (1) Provides leadership, technical assistance, guidance, and consultation in the administration of policies and procedures for appointment of individuals through the SBRS, SES, distinguished consultants, experts, consultants, and fellows under Title 42 appointment authorities; (2) provides advisory services, and technical assistance on pay and compensation guidelines in accordance with OPM rules and regulations, HHS and CDC established pay and compensation recommendation policies, and procedures; (3) provides expert human resources advisory services and technical assistance support to the CDC performance review boards and compensation committees; (4) reviews actions for statutory and regulatory compliance; (5) manages strategic recruitment, relocation, and retention incentives to facilitate attraction of a quality, diverse workforce to ensure accomplishment of the CDC mission; (6) provides performance management training for all SES and Title 42 executives with emphasis on performance systems, timelines, supervisory and employee responsibilities; (7) provides guidance on establishing performance plans, conducting mid-year reviews, and conducting final performance rating discussions and closing performance plans; (8) develops and maintains a standard Department-wide performance management system and forms for executives; (9) conducts reviews of SES performance plans and appraisals and provide feedback; (10) prepares and submits SES performance system certification request to OPM and OMB; (11) processes performance awards and performance-based pay adjustments; (12) provides advice, assistance, templates and training workshops on performance award and Presidential Rank Award requirements; (13) manages the HHS Executive Development Program, including developmental activities, rotational assignments, and the Candidate Development Program; advise on development of executive succession planning activities; and (14) provides program guidance, administration, and oversight of CDC immigration and visa programs.

Senior Executive Compensation and Performance Activity (CAJQG2). (1) Provides advisory services, and technical assistance on pay and compensation guidelines in accordance with OPM rules and regulations, HHS and CDC established pay and compensation recommendation policies, and procedures; (2) provides expert human resources advisory services and technical assistance support to the CDC performance review boards and compensation committees; (3) reviews actions for statutory and regulatory compliance; (4) manages strategic recruitment, relocation, and retention incentives to facilitate attraction of a quality, diverse workforce to ensure accomplishment of the CDC mission; (5) provides performance management training for all SES and Title 42 executives with emphasis on performance systems, timelines, supervisory and employee responsibilities; (6) provides guidance on establishing performance plans, conducting mid-year reviews, and conducting final performance rating discussions and closing performance plans; (7) develops and maintains a standard Department-wide performance management system and forms for executives; (8) conducts reviews of SES performance plans and appraisals and provides feedback; (9) prepares and submits SES performance system certification request to OPM and OMB; (10) processes performance awards and performance-based pay adjustments; (11) provides advice, assistance, templates and training workshops on performance award and Presidential Rank Award requirements; and (12) manages the HHS Executive Development Program, including developmental activities, rotational assignments, and the Candidate Development Program; advises on development of executive succession planning activities.

Title 42 and Immigration Activity (CAJQG3). (1) Provides leadership, technical assistance, guidance, and consultation in the administration of policies and procedures for appointment of individuals through the distinguished consultants, experts, consultants, and fellows under Title 42 appointment authorities; and (2) provides program guidance, administration, and oversight of CDC immigration and visa programs.

Dated: July 3, 2012.

Sherri A. Berger,

Chief Operating Officer, Centers for Disease Control and Prevention.

[FR Doc. 2012–17991 Filed 7–25–12; 8:45 am]

BILLING CODE 4160–18–M

DEPARTMENT OF HEALTH AND HUMAN SERVICES

Centers for Disease Control and Prevention

Statement of Organization, Functions, and Delegations of Authority

Part C (Centers for Disease Control and Prevention) of the Statement of Organization, Functions, and Delegations of Authority of the Department of Health and Human Services (45 FR 67772–76, dated October 14, 1980, and corrected at 45 FR 69296, October 20, 1980, as amended most recently at 77 FR 27070–27071, dated May 8, 2012) is amended to reflect the reorganization of the Procurement and Grants Office, Office of the Chief Operating Officer, Centers for Disease Control and Prevention.

Section C–B, Organization and Functions, is hereby amended as follows: Delete in its entirety the title and functional statements for the Procurements and Grants Office (CAJH) and insert the following:

Procurement and Grants Office (CAJH). (1) Advises the Director, Centers for Disease Control and Prevention (CDC), the Administrator, Agency for Toxic Substances and Disease Registry (ATSDR), and their staff, and provides leadership and direction for CDC acquisition, assistance, and materiel management activities to improve the public's health; (2) plans and develops CDC-wide policies, procedures, and practices in acquisition, assistance, and materiel management areas to support public health science and programs; (3) obtains research and development, services, equipment, supplies, and construction in support of CDC's public health mission through acquisition processes; (4) maintains functions relating to personal property, transportation, and warehousing operations; (5) awards, administers, and terminates contracts, purchase orders, grants, and cooperative agreements essential to improve public health; (6) maintains a continuing program of reviews, evaluations, inquiries, and oversight activities of CDC-wide acquisitions, assistance, and materiel management operations to ensure adherence to laws, policies, procedures, regulations, and alignment to CDC's public health goals; and (7) maintains liaison with the Department of Health and Human Services (DHHS), General Services Administration (GSA), General Accounting Office (GAO), and other federal agencies on acquisition, assistance, and materiel management policies, procedures, and operating matters.

Office of the Director (CAJH1). (1) Provides overall leadership, guidance and coordination in all areas of the Procurement and Grants Office (PGO) activities; (2) ensures PGO's policies, processes, and procedures adhere to all rules and regulations and are in alignment with CDC's public health goals; (3) develops and implements organizational strategic planning goals and objectives that support CDC's public health goals; (4) provides overall budgetary and human resource management, and administrative support; (5) directs and coordinates activities in support of the Department's Equal Employment Opportunity Program and employee development; (6) conducts continuing studies and analysis of branch activities; (7) provides technical and managerial direction for the development, implementation, and maintenance of the Integrated Contracts Expert System on a CDC-wide basis; (8) operates CDC's Small and Disadvantaged Business Program, and provides direction and support to various other socioeconomic programs encompassing acquisition and assistance activities; and (9) develops technical requirements for support business practices through technology.

Office of Policy. Oversight and Evaluation (CAJHK). (1) Provides technical and managerial direction for the development of CDC-wide policies, procedures, and practices in the acquisition, assistance, and materiel management areas to support CDC's public health science and programs; (2) participates with senior management in program planning, policy determinations, evaluations, and decisions concerning acquisition, assistance, and materiel management; (3) provides direction for award, administration, measures of effectiveness and termination of contracts, purchase orders, grants, and cooperative agreements; (4) maintains a continuing program of reviews, evaluations, inquiries, and oversight activities of CDC-wide acquisitions, assistance, and materiel management operations to ensure adherence to laws, policies, procedures, and regulations and alignment with CDC's public health goals; (5) maintains liaison with DHHS, GSA, GAO, and other federal agencies on acquisition, assistance, and materiel management policy, procedures, and operating matters; (6) serves as central CDC receipt and referral point for all applications for assistance funds, including interfacing with the automated grants systems and relevant DHHS line of business agencies and distributing draft public health program announcements for review; and (7) provides cost advisory support to acquisition and assistance activities with responsibility for initiating requests for audits and evaluations, and providing recommendations to contracting officer or grants management officer, as required; participates in negotiations with potential contractors and grantees, develops overhead rates for profit and nonprofit organizations, and provides professional advice on accounting and cost principles in resolving audit exceptions as they relate to the acquisition and assistance processes.

Buildings and Facilities Contracts Branch (CAJHL). (1) Directs and controls acquisition planning activities to assure total program needs are addressed and procurements are conducted in a logical, appropriate, and timely sequence; (2) plans, directs, and conducts the acquisition of non-personal services, institutional support services, architect-engineering services, construction of new buildings, alterations, renovations, commodities, and equipment in support of CDC/ATSDR facilities, utilizing a wide variety of contract types and pricing arrangements; (3) provides leadership, direction, procurement options, and approaches in developing specification/statements of work and contract awards; (4) performs contract and purchasing administrative activities including coordination and negotiation of contract modifications, reviewing and approving contractor billings, resolving audit findings, and performing close-out/termination activities; (5) performs simplified acquisition activities in support of CDC/ATSDR program offices; (6) assures that contractor performance is in accordance with contractual commitments; (7) provides leadership and guidance to CDC/ATSDR project officers and program officials; (8) participates with senior program management in program planning, policy determination, evaluation, and directions concerning acquisition strategies and execution; (9) plans, directs, and coordinates activities of the branch; (10) maintains branch's official contracts files; (11) maintains a close working relationship with facilities management and other CDC components in carrying out their

missions; and (12) establishes branch goals, objectives, and priorities, and assures their consistency and coordination with overall objectives of PGO.

Acquisition and Assistance Branch I (CAJHM). This branch supports the National Center for HIV/AIDS, Viral Hepatitis, STD, and TB Prevention by performing the following: (1) Plans, directs, and conducts the acquisition of non-personal services, supplies, equipment, research and development, studies, and data collection for CDC through a variety of contractual mechanisms (competitive and non-competitive) to support CDC's public health goals; (2) plans, directs, and conducts assistance management activities for CDC through the awards of grants and cooperative agreements (competitive and non-competitive) across the public health system; (3) reviews statements of work and assistance applications from a management point of view for conformity to laws, regulations, and policies and alignment to CDC's public health goals, and negotiates and issues contract, grant, and cooperative agreement awards; (4) provides continuing surveillance of financial and administrative aspects of acquisition and assistance-supported activities to assure compliance with appropriate DHHS and CDC policies and application to public health activities; (5) gives technical assistance, where indicated, to improve the management of acquisition and assistance-supported activities, and responds to requests for management information from the Office of the Director, headquarters, regional staffs, CDC offices and the public; (6) performs contract and purchasing administrative activities including coordination and negotiation of contract modifications, reviewing and approving contractor billings, resolving audit findings, and performing close-out/termination activities; (7) provides for the collection and reporting of business management and public health programmatic data, and analyzes and monitors business management data on grants and cooperative agreements; (8) assures that contractor and grantee performance is in accordance with contractual and assistance commitments; (9) provides leadership and guidance to CDC project officers and public health program officials; (10) provides leadership, direction, procurement options, and approaches in developing specifications/statements of work and contract awards; (11) plans, directs, coordinates, and conducts the grants management functions and processes in support of public health assistance awards, including cooperative agreements, discretionary grants, block grants, and formula grants, to state and local governmental public health entities, universities, colleges, research institutions, hospitals, public and private organizations, small businesses, and minority and/or women-owned businesses for CDC; (12) participates with top program management in program planning, policy determination, evaluation, and directions concerning acquisition and assistance strategies and execution; (13) maintains branch's official contract and assistance files; (14) maintains a close working relationship with CDC program office components in carrying out their public health missions; and (15) establishes branch goals, objectives, and priorities, and assures their consistency and coordination with the overall objectives of PGO and CDC.

Acquisition and Assistance Branch II (CAJHN). This branch supports the National Center for Emerging and Zoonotic Infectious Diseases and the National Center for Immunization and Respiratory Diseases by performing the following: (1) Plans, directs, and conducts the acquisition of non-personal services, supplies, equipment, research and development, studies, and data collection for CDC through a variety of contractual mechanisms (competitive and non-competitive) to support CDC's public health goals; (2) plans, directs, and conducts assistance management activities for CDC through the awards of grants and cooperative agreements (competitive and noncompetitive) across the public health system; (3) reviews statements of work and assistance applications from a management point of view for conformity to laws, regulations, and policies and alignment to CDC's public health goals; and negotiates and issues contract, grant, and cooperative agreement awards; (4) provides continuing surveillance of financial and administrative aspects of acquisition and assistance-supported activities to assure compliance with appropriate DHHS and CDC policies and application to public health activities; (5) gives technical assistance, where indicated, to improve the management of acquisition and assistance-supported activities, and responds to requests for management information from the Office of the Director, headquarters, regional staffs, CDC program offices and the public; (6) performs contract and purchasing administrative activities including coordination and negotiation of contract modifications, reviewing and approving contractor billings, resolving audit findings, and performing close-out/termination activities; (7) provides for the collection and reporting of business management and public health programmatic data, and analyzes and monitors business management data on grants and cooperative agreements; (8) assures that contractor and grantee performance is in accordance with contractual and assistance commitments; (9) provides leadership and guidance to CDC project officers and public health program officials; (10) provides leadership, direction, procurement options, and approaches in developing specifications/statements of work and contract awards; (11) plans, directs, coordinates, and conducts the grants management functions and processes in support of public health assistance awards, including cooperative agreements, discretionary grants, block grants, and formula grants, to state and local governmental public health entities, universities, colleges, research institutions, hospitals, public and private organizations, small businesses, and minority and/or women-owned businesses for CDC; (12) participates with top program management in program planning, policy determination, evaluation, and directions concerning acquisition and assistance strategies and execution; (13) maintains branch's official contract and assistance files; (14) maintains a close working relationship with CDC program office in carrying out their public health missions; and (15) establishes branch goals, objectives, and priorities, and assures their consistency and coordination with the overall objectives of PGO and CDC.

Acquisition and Assistance Branch III (CAJHP). This branch supports the National Center for Birth Defects and Developmental Disabilities and the National Center for Chronic Disease Prevention and Health Promotion by performing the following: (1) Plans, directs, and conducts the acquisition of non-personal services, supplies, equipment, research and development, studies, and data collection for CDC through a variety of contractual mechanisms (competitive and non-competitive) to support CDC's public health goals; (2) plans, directs, and conducts assistance management activities for CDC through the awards of grants and cooperative agreements (competitive and non-competitive) across the public health system; (3) reviews statements of work and assistance applications from a management point of view for conformity to laws, regulations, and

policies and alignment to CDC's public health goals, and negotiates and issues contract, grant, and cooperative agreement awards; (4) provides continuing surveillance of financial and administrative aspects of acquisition and assistance supported activities to assure compliance with appropriate DHHS and CDC policies, and application to public health activities; (5) gives technical assistance, where indicated, to improve the management of acquisition and assistance supported activities, and responds to requests for management information from the Office of the Director, headquarters, regional staffs, CDC program offices and the public; (6) performs contract and purchasing administrative activities including coordination and negotiation of contract modifications, reviewing and approving contractor billings, resolving audit findings, and performing close-out/termination activities; (7) provides for the collection and reporting of business management and public health programmatic data, and analyzes and monitors business management data on grants and cooperative agreements; (8) assures that contractor and grantee performance is in accordance with contractual and assistance commitments; (9) provides leadership and guidance to CDC project officers and public health program officials; (10) provides leadership, direction, procurement options, and approaches in developing specifications/statements of work and contract awards; (11) plans, directs, coordinates, and conducts the grants management functions and processes in support of public health assistance awards, including cooperative agreements, discretionary grants, block grants, and formula grants, to state and local governmental public health entities, universities, colleges, research institutions, hospitals, public and private organizations, small businesses, and minority and/or women-owned businesses for CDC; (12) participates with top program management in program planning, policy determination, evaluation, and directions concerning acquisition and assistance strategies and execution; (13) maintains branch's official contract and assistance files; (14) maintains a close working relationship with CDC program office components in carrying out their public health missions; and (15) establishes branch goals, objectives, and priorities, and assures their consistency and coordination with the overall objectives of PGO and CDC.

Acquisition and Assistance Branch IV (CAJHR). This branch supports the National Center for Environmental Health, the National Center for Injury Prevention and Control, and ATSDR by performing the following: (1) Plans, directs, and conducts the acquisition of non-personal services, supplies, equipment, research and development, studies, and data collection for CDC through a variety of contractual mechanisms (competitive and non-competitive) to support CDC's public health goals; (2) plans, directs, and conducts assistance management activities for CDC through the awards of grants and cooperative agreements (competitive and non-competitive) across the public health system; (3) reviews statements of work and assistance applications from a management point of view for conformity to laws, regulations, and policies and alignment to CDC's public health goals, and negotiates and issues contract, grant, and cooperative agreement awards; (4) provides continuing surveillance of financial and administrative aspects of acquisition and assistance-supported activities to assure compliance with appropriate DHHS and CDC policies and application to public health activities; (5) gives technical assistance, where indicated, to improve the management of acquisition and assistance-supported activities, and responds to requests for management information from the Office of the Director, headquarters, regional staffs, CDC program offices and the public; (6) performs contract and purchasing administrative activities including coordination and negotiation of contract modifications, reviewing and approving contractor billings, resolving audit findings, and performing closeout/termination activities; (7) provides for the collection and reporting of business management and public health programmatic data, and analyzes and monitors business management data on grants and cooperative agreements; (8) assures that contractor and grantee performance is in accordance with contractual and assistance commitments; (9) provides leadership and guidance to CDC project officers and public health program officials; (10) provides leadership, direction, procurement options, and approaches in developing specifications/statements of work and contract awards; (11) plans, directs, coordinates, and conducts the grants management functions and processes in support of public health assistance awards, including cooperative agreements, discretionary grants, block grants, and formula grants, to state and local governmental public health entities, universities, colleges, research institutions, hospitals, public and private organizations, small businesses, and minority- and/or women-owned businesses for CDC; (12) participates with top program management in program planning, policy determination, evaluation, and directions concerning acquisition and assistance strategies and execution; (13) maintains branch's official contract and assistance files; (14) maintains a close working relationship with CDC program office components in carrying out their public health missions; and (15) establishes branch goals, objectives, and priorities, and assures their consistency and coordination with the overall objectives of PGO and CDC.

Acquisition and Assistance Branch V (Field) (CAJHS). This branch supports the National Institute for Occupational Safety and Health (NIOSH) by performing the following: (1) Plans, directs, and conducts the acquisition of non-personal services, supplies, equipment, research and development, studies, and data collection for CDC through a variety of contractual mechanisms (competitive and non-competitive) to support CDC's public health goals; (2) plans, directs, and conducts assistance management activities for CDC through the awards of grants and cooperative agreements (competitive and non-competitive) across the public health system; (3) reviews statements of work and assistance applications from a management point of view for conformity to laws, regulations, and policies and alignment to CDC's public health goals, and negotiates and issues contract, grant, and cooperative agreement awards; (4) provides continuing surveillance of financial and administrative aspects of acquisition and assistance-supported activities to assure compliance with appropriate DHHS and CDC policies and application to public health activities; (5) gives technical assistance, where indicated, to improve the management of acquisition and assistance-supported activities, and responds to requests for management information from the Office of the Director, headquarters, regional staffs, and the public; (6) performs contract and purchasing administrative activities including coordination and negotiation of contract modifications, reviewing and approving contractor billings, resolving audit findings, and performing close-out/termination activities; (7) provides for the collection and reporting of business management and public health programmatic data, and analyzes and monitors business management data on grants and cooperative agreements; (8) assures that contractor and grantee

performance is in accordance with contractual and assistance commitments; (9) provides leadership and guidance to CDC project officers and public health program officials; (10) provides leadership, direction, procurement options, and approaches in developing specification/statements of work and contract awards; (11) plans, directs, coordinates, and conducts the grants management functions and processes in support of public health assistance awards, including cooperative agreements, discretionary grants, block grants, and formula grants, to state and local governmental public health entities, universities, colleges, research institutions, hospitals, public and private organizations, small businesses, and minority- and/or women-owned businesses for CDC; (12) participates with top program management in program planning, policy determination, evaluation, and directions concerning acquisition and assistance strategies and execution; (13) maintains branch's official contract and assistance files; (14) maintains a close working relationship with CDC components in carrying out their public health missions; (15) establishes branch goals, objectives, and priorities, and assures their consistency and coordination with the overall objectives of PGO and CDC; and (16) acquisition and public health assistance functions in support of NIOSH are accomplished with field office locations located in Pittsburgh, PA; Morgantown, WV; Cincinnati, OH; and Spokane, WA.

Acquisition and Assistance Branch VI (CAJHT). This branch supports the Office of Surveillance, Epidemiology, and Laboratory Services, the Office of Public Health Preparedness and Response and the Office for State, Tribal, Local, and Territorial Support by performing the following: (1) Plans, directs, and conducts the acquisition of non-personal services, supplies, equipment, research and development, studies, and data collection for CDC through a variety of contractual mechanisms (competitive and noncompetitive) to support CDC's public health goals; (2) plans, directs, and conducts assistance management activities for CDC through the awards of grants and cooperative agreements (competitive and non-competitive) across the public health system; (3) reviews statements of work and assistance applications from a management point of view for conformity to laws, regulations, and policies and alignment to CDC's public health goals, and negotiates and issues contract, grant, and cooperative agreement awards; (4) provides continuing surveillance of financial and administrative aspects of acquisition and assistance-supported activities to assure compliance with appropriate DHHS and CDC policies and application to public health activities; (5) gives technical assistance, where indicated, to improve the management of acquisition and assistance-supported activities, and responds to requests for management information from the Office of the Director, headquarters, regional staffs, CDC program offices and the public; (6) performs contract and purchasing administrative activities including coordination and negotiation of contract modifications, reviewing and approving contractor billings, resolving audit findings, and performing close-out/termination activities; (7) provides for the collection and reporting of business management and public health programmatic data, and analyzes and monitors business management data on grants and cooperative agreements; (8) assures that contractor and grantee performance is in accordance with contractual and assistance commitments; (9) provides leadership and guidance to CDC project officers and public health program officials; (10) provides leadership, direction, procurement options, and approaches in developing specifications/statements of work and contract awards; (11) plans, directs coordinates, and conducts the grants management functions and processes in support of assistance awards, including cooperative agreements, discretionary grants, block grants, and, formula grants, to state and local governmental public health entities, universities, colleges, research institutions, hospitals, public and private organizations, small businesses, and minority- and/or women-owned businesses for CDC; (12) participates with top program management in program planning, policy determination, evaluation, and directions concerning acquisition and assistance strategies and execution; (13) maintains branch's official contract and assistance files; (14) maintains a close working relationship with CDC program office components in carrying out their public health missions; and (15) establishes branch goals, objectives, and priorities, and assures their consistency and coordination with the overall objectives of PGO and CDC.

Acquisition and Assistance Branch VII (Global) (CAJHU). This branch supports the Center for Global Health and CDC's global acquisition and assistance needs by performing the following: (1) Plans, directs and conducts the acquisition of a wide variety of services, research and development, studies, data collection, equipment, materials, and personal and non-personal services in support of CDC's international public health operations, utilizing a wide variety of contract types and pricing arrangements; (2) plans, directs, and conducts assistance management activities for CDC's international public health programs; (3) provides leadership, direction, acquisition options, and approaches in developing specifications/statements of work and grants announcements; (4) participates with top public health program management in program planning, policy determination, evaluation, and directions concerning acquisition and grants strategies and execution; (5) provides innovative problem-solving methods in the coordination of international procurement and grants for a wide range plan with public health partners in virtually all major domestic and international health agencies dealing with the United Nations Foundation health priorities/issues, to include resolution of matters with the Department of State; (6) executes contracts and grants in support of international activities; (7) provides business management oversight for contracts and public health assistance awards; (8) participates with top program management in program planning, policy determination, evaluation, and directions concerning acquisition and assistance strategies and execution; (9) maintains branch's official contract and assistance files; (10) maintains a close working relationship with CDC public health program office components in carrying out their missions; and (11) establishes branch goals, objectives, and priorities, and assures their consistency and coordination with the overall objectives of PGO and CDC.

Acquisition and Assistance Branch VIII (CAJHV). This branch supports the CDC Office of the Director acquisition requirements by performing the following: (1) Plans, directs, and conducts the acquisition of non-personal services, supplies, equipment, research and development, studies, and data collection for CDC through a variety of contractual mechanisms (competitive and non-competitive); (2) reviews statements of work from a management point of view for conformity to laws, regulations, and policies and alignment to CDC's public health goals, and negotiates and issues contracts; (3) provides continuing surveillance of financial and

administrative aspects of acquisition-supported activities to assure compliance with appropriate DHHS and CDC policies and application to public health activities; (4) gives technical assistance, where indicated, to improve the management of acquisition activities, and responds to requests for management information from the Office of the Director, headquarters, regional staffs, CDC program offices and the public; (5) performs contract and purchasing administrative activities including coordination and negotiation of contract modifications, reviewing and approving contractor billings, resolving audit findings, and performing close-out/termination activities; (6) provides for the collection and reporting of business management and public health programmatic data, and analyzes and monitors business management data on grants and cooperative agreements; (7) assures that contractor performance is in accordance with contractual commitments; (8) provides leadership and guidance to CDC project officers and program officials; (9) provides leadership, direction, procurement options, and approaches in developing specifications/statements of work and contract awards; (10) participates with top program management in public health program planning, policy determination, evaluation, and directions concerning acquisition strategies and execution; (11) maintains branch's official contract files; (12) maintains a close working relationship with CDC program office components in carrying out their missions; and (13) establishes branch goals, objectives, and priorities, and assures their consistency and coordination with the overall objectives of PGO and CDC.

Logistics Management Branch (CAJHW). (1) Develops and implements CDC-wide policies, procedures, and criteria necessary to comply with federal and departmental regulations governing personal property, transportation, shipping, and fleet management; (2) determines, recommends, and implements procedural changes needed to maintain effective management of CDC property including but not limited to: Inventory control; property records; receipt, delivery, tracking, shipping and return of CDC materiel; property reutilization and disposal; transportation of freight; and CDC's vehicle fleet; (3) provides audits, training and technical assistance to CDC Centers/Institute/Offices on property, transportation, shipping, and fleet management; (4) determines the requirement for and serves as the functional proponent for the design, test, and implementation of logistics management systems; (5) represents CDC on inter-and intra-departmental committees relevant to logistical functions; (6) serves as the CDC liaison to HHS and other federal agencies on logistical matters such as property, transportation and traffic management; and (7) establishes branch goals, objectives and priorities, and assures consistency and coordination with overall Procurement and Grants Office logistical goals and objectives.

Dated: July 3, 2012.

Sherri A. Berger,

Chief Operating Officer, Centers for Disease Control and Prevention.

[FR Doc. 2012–17990 Filed 7–25–12; 8:45 am]

BILLING CODE 4160–18–M

DEPARTMENT OF HEALTH AND HUMAN SERVICES

Food and Drug Administration

[Docket No. FDA–2012–N–0454]

Agency Information Collection Activities; Submission for Office of Management and Budget Review; Comment Request; Guidance for Industry on Questions and Answers Regarding the Labeling of Nonprescription Human Drug Products Marketed Without an Approved Application as Required by the Dietary Supplement and Nonprescription Drug Consumer Protection Act

AGENCY: Food and Drug Administration, HHS.

ACTION: Notice.

SUMMARY: The Food and Drug Administration (FDA) is announcing that a proposed collection of information has been submitted to the Office of Management and Budget (OMB) for review and clearance under the Paperwork Reduction Act of 1995.

DATES: Fax written comments on the collection of information by August 27, 2012.

ADDRESSES: To ensure that comments on the information collection are received, OMB recommends that written comments be faxed to the Office of Information and Regulatory Affairs, OMB, Attn: FDA Desk Officer, FAX: 202–395–7285, or emailed to *oira_submission@omb.eop.gov.* All comments should be identified with the OMB control number 0910–0640. Also include the FDA docket number found in brackets in the heading of this document.

FOR FURTHER INFORMATION CONTACT: Juanmanuel Vilela, Office of Information Management, Food and Drug Administration, 1350 Piccard Dr., PI50–400B, Rockville, MD 20850, 301–796–7651, *juanmanuel.vilela@fda.hhs.gov.*

SUPPLEMENTARY INFORMATION: In compliance with 44 U.S.C. 3507, FDA has submitted the following proposed collection of information to OMB for review and clearance.

Guidance for Industry on Questions and Answers Regarding the Labeling of Nonprescription Human Drug Products Marketed Without an Approved Application as Required by the Dietary Supplement and Nonprescription Drug Consumer Protection Act—(OMB Control Number 0910–0640)—Extension

On December 22, 2006, the President signed into law the Dietary Supplement and Nonprescription Drug Consumer Protection Act (Pub. L. 109–462, 120 Stat. 3469). This law amends the Federal Food, Drug, and Cosmetic Act (the FD&C Act) with respect to serious adverse event reporting for dietary supplements and nonprescription drugs marketed without an approved application.

Section 502(x) of the FD&C Act (21 U.S.C. 352(x)), which was added by Public Law 109–462, requires the label of a nonprescription drug product marketed without an approved application in the United States to include a domestic address or domestic telephone number through which a responsible person may receive a report of a serious adverse event associated with the product. The guidance document contains questions and answers relating to this labeling requirement and provides guidance to industry on the following topics: (1) The meaning of ''domestic address'' for purposes of the labeling requirements of section 502(x) of the FD&C Act; (2) FDA's recommendation for the use of an introductory statement before the domestic address or phone number that is required to appear on the product label under section 502(x) of the FD&C Act; and (3) FDA's intent regarding enforcing the labeling requirements of section 502(x) of the FD&C Act. Separate guidance, issued by the Center for Food Safety and Applied Nutrition on reporting for dietary supplements, is announced elsewhere in the **Federal Register**.

Title: Guidance for Industry on Questions and Answers Regarding the Labeling of Nonprescription Human Drug Products Marketed Without an Approved Application as Required by the Dietary Supplement and Nonprescription Drug Consumer Protection Act.

Description of Respondents: Respondents to this collection of information are manufacturers, packers, and distributors whose name (under section 502(b)(1) of the FD&C Act) appears on the label of a nonprescription drug product marketed in the United States without an approved application.

Burden Estimate: FDA is requesting public comment on the estimated one-time reporting burden from these respondents, as required by 502(x) of the FD&C Act and described in the guidance ''Questions and Answers Regarding the Labeling of Nonprescription Human Drug Products Marketed Without an Approved Application as Required by the Dietary Supplement and Nonprescription Drug Consumer Protection Act.'' The estimates for one-time reporting are based on FDA's knowledge of nonprescription drug product labeling in the United States, whether or not marketed under an approved application.

In the **Federal Register** of May 15, 2012 (77 FR 28604), FDA published a 60-day notice requesting public comment on the proposed collection of information. No comments were received on the information collection.

FDA estimates the burden of this collection of information as follows:

TABLE 1—ESTIMATED ONE-TIME REPORTING BURDEN [1]

	Number of respondents	Number of responses per respondent	Total responses	Average burden per response	Total hours
Domestic address or phone number labeling requirement (21 U.S.C. 502(x)) and recommendation to clarify its purpose	200	500	100,000	4	400,000

[1] There are no capital costs or maintenance and operating costs associated with this collection of information.

As indicated in table 1 of this document, FDA estimates that approximately 200 manufacturers will revise approximately 100,000 labels to add a full domestic address and a domestic telephone number, and should they choose to adopt the guidance's recommendation, to add a statement identifying the purpose of the domestic address or telephone number. FDA believes that designing the label change should not take longer than 4 hours per label. Automated printing of the labels should only require a few seconds per label. This estimate accounts for the possibility that every manufacturer will make label revision, which is unlikely. Because the majority of over-the-counter drug product labels currently have a domestic telephone number that satisfies the requirement, we believe many manufacturers will opt not to adopt the guidance's recommendation to add a statement identifying the purpose of the address or telephone number, significantly reducing the number of total responses. However, assuming that all labels are revised, we estimate a one-time reporting burden for this information collection of 400,000 hours.

Dated: July 18, 2012.

Leslie Kux,

Assistant Commissioner for Policy.

[FR Doc. 2012–18233 Filed 7–25–12; 8:45 am]

BILLING CODE 4160–01–P

DEPARTMENT OF HEALTH AND HUMAN SERVICES

Food and Drug Administration

[Docket No. FDA–2012–N–0473]

Agency Information Collection Activities; Submission for Office of Management and Budget Review; Irradiation in the Production, Processing, and Handling of Food

AGENCY: Food and Drug Administration, HHS.

ACTION: Notice.

SUMMARY: The Food and Drug Administration (FDA) is announcing that a proposed collection of information has been submitted to the Office of Management and Budget (OMB) for review and clearance under the Paperwork Reduction Act of 1995.

DATES: Fax written comments on the collection of information by August 27, 2012.

ADDRESSES: To ensure that comments on the information collection are received, OMB recommends that written comments be faxed to the Office of Information and Regulatory Affairs, OMB, Attn: FDA Desk Officer, FAX: 202–395–7285, or emailed to o*ira_submission@omb.eop.gov.* All comments should be identified with the OMB control number 0910–0186. Also include the FDA docket number found in brackets in the heading of this document.

FOR FURTHER INFORMATION CONTACT: Domini Bean, Office of Information Management, Food and Drug Administration, 1350 Piccard Dr., PI50–400T, Rockville, MD 20850, 301–796–5733, *domini.bean@fda.hhs.gov.*

SUPPLEMENTARY INFORMATION: In compliance with 44 U.S.C. 3507, FDA has submitted the following proposed collection of information to OMB for review and clearance.

Irradiation in the Production, Processing, and Handling of Food—21 CFR Part 179 (OMB Control Number 0910–0186)—Extension

Under sections 201(s) and 409 of the Federal Food, Drug, and Cosmetic Act (the FD&C Act) (21 U.S.C. 321(s) and 348), food irradiation is subject to regulation under the food additive premarket approval provisions of the FD&C Act. The regulations providing for uses of irradiation in the production, processing, and handling of food are found in part 179 (21 CFR part 179). To ensure safe use of a radiation source, § 179.21(b)(1) requires that the label of sources bear appropriate and accurate information identifying the source of radiation and the maximum (or minimum and maximum) energy of radiation emitted by X-ray tube sources. Section 179.21(b)(2) requires that the label or accompanying labeling bear adequate directions for installation and use and a statement supplied by FDA that indicates maximum dose of radiation allowed. Section 179.26(c) requires that the label or accompanying labeling bear a logo and a radiation disclosure statement. Section 179.25(e) requires that food processors who treat food with radiation make and retain, for 1 year past the expected shelf life of the products up to a maximum of 3 years, specified records relating to the

irradiation process (e.g., the food treated, lot identification, scheduled process, etc.). The records required by § 179.25(e) are used by FDA inspectors to assess compliance with the regulation that establishes limits within which radiation may be safely used to treat food. The Agency cannot ensure safe use without a method to assess compliance with the dose limits, and there are no practicable methods for analyzing most foods to determine whether they have been treated with ionizing radiation and are within the limitations set forth in part 179. Records inspection is the only way to determine whether firms are complying with the regulations for treatment of foods with ionizing radiation.

In the **Federal Register** of May 17, 2012 (77 FR 29352), FDA published a 60-day notice requesting public comment on the proposed collection of information. One comment was received outside the scope of the four collection of information topics solicited by the notice.

Description of respondents: Respondents are businesses engaged in the irradiation of food.

FDA estimates the burden of this collection of information as follows:

TABLE 1—ESTIMATED ANNUAL RECORDKEEPING BURDEN [1]

21 CFR Section	Number of recordkeepers	Number of records per recordkeeper	Total annual records	Average burden per recordkeeping	Total hours
179.25(e), Large Processors	3	300	900	1	900
179.25(e), Small Processors	4	30	120	1	120
Total					1,020

[1] There are no capital costs or operating and maintenance costs associated with this collection of information.

FDA bases its estimate of burden for the recordkeeping provisions of § 179.25(e) on the Agency's experience regulating the safe use of radiation as a direct food additive. The number of firms who process food using irradiation is extremely limited. FDA estimates that there are 3 irradiation plants whose business is devoted primarily (i.e., approximately 100 percent) to irradiation of food and other agricultural products. Four other firms also irradiate small quantities of food. FDA estimates that this irradiation accounts for no more than 10 percent of the business for each of these firms. Therefore, the average estimated burden is based on 3 facilities devoting 100 percent of their business to food irradiation (3×300 hours = 900 hours for recordkeeping annually), and 4 facilities devoting 10 percent of their business to food irradiation (4×30 hours = 120 hours for recordkeeping annually).

No burden has been estimated for the labeling requirements in §§ 179.21(b)(1), 179.21(b)(2), and 179.26(c) because the information to be disclosed is information that has been supplied by FDA. Under 5 CFR 1320.3(c)(2), the public disclosure of information originally supplied by the Federal Government to the recipient for the purpose of disclosure to the public is not a collection of information.

Dated: July 18, 2012.

Leslie Kux,

Assistant Commissioner for Policy.

[FR Doc. 2012–18234 Filed 7–25–12; 8:45 am]

BILLING CODE 4160–01–P

DEPARTMENT OF HEALTH AND HUMAN SERVICES

Food and Drug Administration

[Docket No. FDA–2012–N–0280]

Agency Information Collection Activities; Submission for Office of Management and Budget Review; Comment Request; Financial Disclosure by Clinical Investigators

AGENCY: Food and Drug Administration, HHS.

ACTION: Notice.

SUMMARY: The Food and Drug Administration (FDA) is announcing that a proposed collection of information has been submitted to the Office of Management and Budget (OMB) for review and clearance under the Paperwork Reduction Act of 1995.

DATES: Fax written comments on the collection of information by August 27, 2012.

ADDRESSES: To ensure that comments on the information collection are received, OMB recommends that written comments be faxed to the Office of Information and Regulatory Affairs, OMB, Attn: FDA Desk Officer, FAX: 202–395–7285, or emailed to *oira_submission@omb.eop.gov.* All comments should be identified with the OMB control number 0910–0396. Also include the FDA docket number found in brackets in the heading of this document.

FOR FURTHER INFORMATION CONTACT: Daniel Gittleson, Office of Information Management, Food and Drug Administration, 1350 Piccard Dr., PI50–400B, Rockville, MD 20850, 301–796–5156, *Daniel.Gittleson@fda.hhs.gov.*

SUPPLEMENTARY INFORMATION: In compliance with 44 U.S.C. 3507, FDA has submitted the following proposed collection of information to OMB for review and clearance.

Financial Disclosure by Clinical Investigators—(OMB Control Number 0910–0396)—Extension

Respondents to this collection are sponsors of marketing applications that contain clinical data from studies covered by the regulations. These sponsors represent pharmaceutical, biologic, and medical device firms. Respondents are also clinical investigators who provide financial information to the sponsors of marketing applications.

Under § 54.4(a) (21 CFR 54.4(a)), applicants submitting an application that relies on clinical studies must submit a complete list of clinical investigators who participated in a covered clinical study, and must either certify to the absence of certain financial arrangements with clinical investigators (Form FDA 3454) or, under § 54.4(a)(3), disclose to FDA the nature of those arrangements and the steps taken by the applicant or sponsor to minimize the potential for bias (Form FDA 3455).

Under § 54.6, the sponsors of covered studies must maintain complete records of compensation agreements with any compensation paid to nonemployee clinical investigators, including information showing any financial interests held by the clinical investigator, for a time period of 2 years after the date of approval of the applications. Sponsors of covered studies maintain many records with

regard to clinical investigators, including protocol agreements and investigator resumes or curriculum vitae. FDA estimates than an average of 15 minutes will be required for each recordkeeper to add this record to the clinical investigators' file.

Under § 54.4(b), clinical investigators supply to the sponsor of a covered study financial information sufficient to allow the sponsor to submit complete and accurate certification or disclosure statements. Clinical investigators are accustomed to supplying such information when applying for research grants. Also, most people know the financial holdings of their immediate family and records of such interests are generally accessible because they are needed for preparing tax records. For these reasons, FDA estimates that it will take clinical investigators 15 minutes to submit such records to the sponsor.

Subsequent to publication of the 60-day notice, FDA reestimated the information collection. Upon additional inspection of the data, FDA has updated the estimated recordkeeping burden hours to more accurately reflect the burden.

In the **Federal Register** of March 28, 2012 (77 FR 18826), FDA published a 60-day notice requesting public comment on the proposed collection of information. No comments were received.

FDA estimates the burden of this collection of information as follows:

TABLE 1—ESTIMATED ANNUAL REPORTING BURDEN [1]

21 CFR Section	Number of respondents	Number of responses per respondent	Total annual responses	Average burden per response	Total hours
Certification—54.4(a)(1) and (a)(2)—Form FDA 3454	902	1	902	1	902
Disclosure—54.4(a)(3)—Form FDA 3455	90	1	90	5	450
Total					1,352

[1] There are no capital costs or operating and maintenance costs associated with this collection of information.

TABLE 2—ESTIMATED ANNUAL REPORTING BURDEN

21 CFR Section	Number of recordkeepers	Number of records per recordkeeper	Total annual records	Average burden per recordkeeping	Total hours
Recordkeeping—54.6	902	1	902	0.25	226

TABLE 3—ESTIMATED ANNUAL THIRD-PARTY DISCLOSURE BURDEN

21 CFR Section	Number of respondents	Number of disclosures per respondent	Total annual disclosures	Average burden per disclosure	Total hours
Clinical Investigators—54.4(b)	10,554	1	10,554	0.17	1,794

Dated: July 16, 2012.

Leslie Kux,

Assistant Commissioner for Policy.

[FR Doc. 2012–18235 Filed 7–25–12; 8:45 am]

BILLING CODE 4160–01–P

DEPARTMENT OF HEALTH AND HUMAN SERVICES

Food and Drug Administration

[Docket No. FDA–2012–N–0748]

Agency Information Collection Activities; Proposed Collection; Comment Request; Generic Drug User Fee Cover Sheet; Form FDA 3794

AGENCY: Food and Drug Administration, HHS.

ACTION: Notice.

SUMMARY: The Food and Drug Administration (FDA) is announcing an opportunity for public comment on the proposed collection of certain information by the Agency. Under the Paperwork Reduction Act of 1995 (the PRA), Federal Agencies are required to publish notice in the **Federal Register** concerning each proposed collection of information and to allow 60 days for public comment in response to the notice. This notice solicits comments concerning collection of information using Form FDA 3794 entitled ''Generic Drug User Fee Cover Sheet.''

DATES: Submit either electronic or written comments on the collection of information by September 24, 2012.

ADDRESSES: Submit electronic comments on the collection of information to *http://www.regulations.gov*. Submit written comments on the collection of information to the Division of Dockets Management (HFA–305), Food and Drug Administration, 5630 Fishers Lane, rm. 1061, Rockville, MD 20852. All comments should be identified with the docket number found in brackets in the heading of this document.

FOR FURTHER INFORMATION CONTACT: Juanmanuel Vilela, Office of Information Management, Food and Drug Administration, 1350 Piccard Dr., PI50–400B, Rockville, MD 20850, 301–796–7651, *juanmanuel.vilela@fda.hhs.gov*.

SUPPLEMENTARY INFORMATION: Under the PRA (44 U.S.C. 3501–3520), Federal Agencies must obtain approval from the Office of Management and Budget (OMB) for each collection of information they conduct or sponsor. ''Collection of information'' is defined in 44 U.S.C. 3502(3) and 5 CFR 1320.3(c) and includes Agency requests or requirements that members of the public submit reports, keep records, or provide information to a third party. Section 3506(c)(2)(A) of the PRA (44 U.S.C. 3506(c)(2)(A)) requires Federal Agencies to provide a 60-day notice in the **Federal Register** concerning each proposed collection of information before submitting the collection to OMB for approval. To

comply with this requirement, FDA is publishing notice of the proposed collection of information set forth in this document.

With respect to the following collection of information, FDA invites comments on these topics: (1) Whether the proposed collection of information is necessary for the proper performance of FDA's functions, including whether the information will have practical utility; (2) the accuracy of FDA's estimate of the burden of the proposed collection of information, including the validity of the methodology and assumptions used; (3) ways to enhance the quality, utility, and clarity of the information to be collected; and (4) ways to minimize the burden of the collection of information on respondents, including through the use of automated collection techniques, when appropriate, and other forms of information technology.

Generic Drug User Fee Cover Sheet; Form FDA 3794—(OMB Control Number 0910—New)

On July 9, 2012, the Generic Drug User Fee Act (GDUFA) (Pub. L. 112–144, Title 111) was signed into law by the President. GDUFA, designed to speed the delivery of safe and effective generic drugs to the public and reduce costs to industry, requires that generic drug manufacturers pay user fees to finance critical and measurable program enhancements. The user fees required by GDUFA are as follows: A one-time fee for original abbreviated new drug applications (ANDAs) pending on October 1, 2012 (also known as backlog applications); fees for type II active pharmaceutical ingredient (API) and final dosage form (FDF) facilities; fees for new ANDAs and prior approval supplements (PASs); and a one-time fee for drug master files (DMFs).

The purpose of this notice is to solicit feedback on the collection of information in an electronic form used to calculate and pay generic drug user fees. Proposed Form FDA 3794, the Generic Drug User Fee Cover Sheet, requests the minimum necessary information to determine if a person has satisfied all relevant user fee obligations. The proposed form is modeled on other FDA user fee cover sheets, including Form FDA 3397, the Prescription Drug User Fee Act Cover Sheet. The information collected would be used by the FDA to initiate the administrative screening of generic drug submissions and DMFs, support the inspection of generic drug facilities, and otherwise support the generic drug program. A copy of the proposed form will be available in the docket for this notice.

Respondents to this proposed collection of information would be potential or actual generic application holders and/or related manufacturers (manufacturers of FDF and/or APIs). Companies with multiple applications will submit a cover sheet for each application and facility. Based on FDA's database of application holders and related manufacturers, we estimate that 500 companies would submit a total of 3,850 coversheets annually to pay for application and facility user fees. FDA estimates that the 3,850 annual cover sheet responses would break down as follows: [1] 2,000 facilities fees, 750 ANDAs, 750 PASs, and 350 Type II API DMFs. We also estimate that the one-time backlog fee would affect 350 application owners sponsoring 2,700 applications. The estimated hours per response are based on FDA's past experience with other submissions, and range from approximately 0.1 to 0.5 hours. The hours per response are estimated at the upper end of the range to be conservative.

FDA estimates the burden of this collection of information as follows:

TABLE 1—ESTIMATED ANNUAL REPORTING BURDEN [1]

Form	Number of respondents	Number of responses per respondent	Total annual responses	Average burden per response	Total hours
FDA 3794 [2]	500	7.7	3,850	0.5	1,925

[1] There are no capital costs or operating and maintenance costs associated with this collection of information.
[2] For all applicable applications and fees except for the backlog fee.

The backlog fee is a one-time fee. The Agency expects the majority of these fees to be received in the first year only. The estimated reporting burden for the backlog fee is shown in table 2 of this document.

TABLE 2—ESTIMATED ONE-TIME ANNUAL REPORTING BURDEN [1]

Form	Number of respondents	Number of responses per respondent	Total annual responses	Average burden per response	Total hours
FDA 3794 [2]	350	7.7	2,700	0.5	1,350

[1] Ther are no capital costs or operating maintenance costs associated with this collection of information.
[2] For backlog fee.

[1] These estimates are based on conversations between the Agency and representatives of regulated industry during the generic drug user fee negotiations.

Dated: July 18, 2012.

Leslie Kux,

Assistant Commissioner for Policy.

[FR Doc. 2012–18232 Filed 7–25–12; 8:45 am]

BILLING CODE 4160–01–P

DEPARTMENT OF HEALTH AND HUMAN SERVICES

Food and Drug Administration

[Docket No. FDA–2012–N–0001]

Food and Drug Administration Pediatric Medical Devices Workshop; Notice of Workshop

AGENCY: Food and Drug Administration, HHS.

ACTION: Notice.

The Food and Drug Administration's (FDA) Office of Orphan Products Development is announcing the following workshop: FDA Pediatric Medical Devices Workshop. This meeting is intended to focus on challenges in pediatric device development—namely, business planning and funding concerns; and how sponsors can most effectively interact with the FDA. The goal of this meeting is to engage and educate pediatric innovators and device industry sponsors.

This educational meeting will consist of live presentations provided by FDA experts from various Centers and Offices, as well as from outside experts. The interactive meeting will also include a ''mock'' FDA pre-submission meeting for a ''mock'' pediatric medical device, to illustrate how such encounters may transpire. In addition, attendees will have an opportunity during lunch to engage with Pediatric Device Consortia Grant Program leaders. The meeting will be recorded for subsequent posting on the FDA Web site.

Date and Time: The meeting will be held on September 24, 2012, from 8 a.m. to 5:30 p.m.

Location: FDA White Oak Campus, 10903 New Hampshire Ave., Bldg. 31 Conference Center, the Great Room (rm. 1503), Silver Spring, MD 20993–0002. For participants who cannot attend the live meeting, a recorded Web cast will be made available after the meeting.

Contact: Linda Ulrich, Food and Drug Administration, 10903 New Hampshire Ave., Bldg. 32, Rm.5206, Silver Spring, MD 20993–0002, 301–796–8686, FAX: 301–847–8621, email: *megan.mcnamee@icfi.com.*

Registration: Interested participants may register for this meeting at the following Web site: *https://events-support.com/events/FDA_OOPD_Pediatric_Medical_Devices_Workshop.* Please note that registration for the live meeting will be limited based on available seating.

If you need sign language interpretation during this meeting, please contact Linda Ulrich at: *Linda.Ulrich@fda.hhs.gov* by August 24, 2012.

The FDA Pediatric Medical Devices Workshop is supported by FDA's Office of Orphan Product Development and will include participants from the FDA's Center for Devices and Radiologic Health.

(FDA has verified the Web site addresses throughout this document, but we are not responsible for any subsequent changes to the Web sites after this document publishes in the **Federal Register**.)

Dated: July 17, 2012.

Leslie Kux,

Assistant Commissioner for Policy.

[FR Doc. 2012–18231 Filed 7–25–12; 8:45 am]

BILLING CODE 4160–01–P

DEPARTMENT OF HEALTH AND HUMAN SERVICES

Indian Health Service

Draft Policy on Conferring With Urban Indian Organizations

AGENCY: Indian Health Service, Department of Health and Human Services.

ACTION: Notice, with a 45-day comment period.

SUMMARY: This Notice sets forth the Indian Health Service policy for conferring with urban Indian organizations and invites comments within 45 days. In March 2010, the Indian Health Care Improvement Act was reauthorized and amended as part of the Patient Protection and Affordable Care Act, Public Law 111–148, as amended by the Health Care and Education Reconciliation Act (together, the Affordable Care Act), Public Law 111–152. One of the changes made to the IHCIA was to create a new requirement that the IHS ''confer'' with UIOs, to the maximum extent practicable, in carrying out the Act as defined by the Indian Health Care Improvement Reauthorization and Extension Act, as enacted and amended by the Affordable Care Act.

DATES: We will consider all comments received by September 10, 2012.

ADDRESSES: Submit comments by email to *Betty.Gould@ihs.gov*; or by US mail to: Ms. Betty Gould, Regulations Officer, Indian Health Service, 801 Thompson Avenue, TMP Suite 450, Rockville, MD 20852.

FOR FURTHER INFORMATION CONTACT: Ms. Phyllis Wolfe, Director, Office of Urban Indian Health Programs, Indian Health Service, 801 Thompson Avenue, Suite 200, Rockville, Maryland 20852. Telephone 301/443–4680 (This is not a toll free number).

Policy on Conferring With Urban Indian Organizations

5–26.1 Introduction

A. *Purpose.* Congress has specifically declared that it is the policy of the Nation ''to ensure the highest possible health status for Indians and urban Indians.'' 25 U.S.C. 1602(1). The U. S. Department of Health and Human Services (HHS) is committed to working with Indian and urban Indian communities to meet this policy. This policy applies to the Indian Health Service (IHS).

This Notice establishes the IHS policy and procedures for conferring with urban Indian organizations (UIOs). The IHS will use this conferring policy to ensure that the health care needs of the urban Indian population are considered at the local, Area, and national levels, when implementing and carrying out the Indian Health Care Improvement Act (IHCIA).

B. *Background.* Urban Indian organizations are a major provider of health care to urban American Indians and Alaska Natives (AI/AN) across the country. When the IHCIA was enacted into law in 1976, it identified the authorities, responsibilities, and functions of the IHS, the primary Federal Agency charged with providing health care to AI/AN. The IHCIA included the authority for the IHS to ''establish programs in urban centers to make health services more accessible to urban Indians'' [Indian Health Care Improvement Act, Title V, section 501, Pub. L. 94–437, 90 Statute (Stat.) 1400, 1410 (1976), codified at 25 United States Code (U.S.C.) 1651]. The IHS carries out this authority through contracts with and grants to UIOs. In March 2010, as part of the Affordable Care Act, Congress reauthorized and amended the IHCIA. The reauthorization of the IHCIA included a requirement that the IHS ''confer,'' to the maximum extent practicable, with UIOs in carrying out the IHCIA.

C. *Policy.* It is IHS policy to confer with UIOs, to the maximum extent practicable, whenever a ''critical event or issue,'' as defined in this Notice, arises in implementing or carrying out the IHCIA.

D. *Requirement.* The IHCIA, as amended, includes four provisions that require the IHS to confer with UIOs.

(1) Indian Health Care Improvement Act, 25 U.S.C. 1660d(b). ''The Secretary shall ensure that the Service confers, to the maximum extent practicable, with urban Indian organizations in carrying out this [Act].''

(2) Indian Health Care Improvement Act, 25 U.S.C. 1602(5). ''Congress declares * * * that all actions under this [Act] shall be carried out with * * * conference with urban Indian organizations, to implement this [Act]. * * *''

(3) Indian Health Care Improvement Act, 25 U.S.C. 1631(f). ''The Secretary shall * * * confer with urban Indian organizations, in developing innovative approaches to address all or part of the total unmet need for construction of health facilities. * * *''

(4) Indian Health Care Improvement Act, 25 U.S.C. 1665k(a)(2)(A)(vii). ''Funding provided pursuant to [25 U.S.C. 1665k ''fetal alcohol spectrum disorders programs''] shall be used * * * to develop and implement * * * in conferring with urban Indian organizations, culturally sensitive assessment and diagnostic tools including * * * multidisciplinary fetal alcohol spectrum disorder clinics for use in Indian communities and urban centers.''

E. *Authorities.*

(1) Indian Health Care Improvement Reauthorization and Extension Act, as enacted and amended by the Patient Protection and Affordable Care Act, Public Law 111–148, § 10221, 124 Stat. 119, 935 (2010).

(2) Indian Health Care Improvement Act, 25 U.S.C. 1601–1683, as amended, including, §§ 1602(1), 1603(29), 1651, 1653(a).

(3) Office of Management and Budget Circular A–19.

F. *Definitions.*

(1) *Confer.* The term ''confer'' means to engage in an open and free exchange of information and opinions that:

a. leads to mutual understanding and comprehension, and

b. emphasizes trust, respect, and shared responsibility.

(2) *Conferring Activities.* The term ''conferring activities'' means implementing confer mechanisms, such as face-to-face meetings, teleconferences, and mailings, to solicit comments and discuss critical events or issues.

(3) *Critical Event or Issue.* A ''critical event or issue,'' as used in this policy, is an event or issue that significantly affects one or more UIOs. Critical events or issues are complex, have significant implications, and are time sensitive. Examples of critical events or issues include developing program regulations, formulating the budget, allocating new resources, and changing policy, as well as public health or environmental events. When necessary, it is within the discretion of the Director, IHS, to make the final determination as to whether or not a specific event or issue qualifies as a ''critical event or issue,'' as defined in this policy.

(4) *IHS Confer with UIOs Report.* The term ''IHS Confer with UIOs Report'' means an annual report to the Secretary, HHS, describing ''critical events or issues'' to UIOs arising in implementing or carrying out the IHCIA.

(5) *Urban Indian Organization.* The term ''urban Indian organization'' means a nonprofit corporate body situated in an urban center, governed by an urban Indian controlled board of directors, and providing for the maximum participation of all interested Indian groups and individuals, which body is capable of legally cooperating with other public and private entities for the purpose of performing the activities described in [25 U.S.C. 1653(a)]. 25 U.S.C. 1603(29).

5–26.2 Objectives

A. To formalize the IHS approach to conferring with UIOs to ensure that urban Indian health priorities and goals are considered.

B. To establish a minimum set of requirements and expectations with respect to conferring for the three levels of IHS management: Headquarters, Area Offices, and Service Units.

C. To identify ''critical events or issues'' arising in implementing or carrying out the IHCIA for which conferring with UIOs will be required for the three levels of IHS management: Headquarters, Area Offices, and Service Units.

D. To identify ''critical events or issues'' arising in implementing or carrying out the IHCIA where partnerships and the inclusion of UIOs would complement consultation with Indian Tribes.

E. To require conferring with UIOs on proposed, new, and existing health policies and programs that qualify as ''critical events or issues'' arising in implementing or carrying out the IHCIA.

F. To promote and develop innovative methods of involving UIOs in IHS policy development and in the decision-making processes of the IHS.

G. To coordinate with the HHS Divisions or Regional Offices; State Agencies; to assist UIOs in communicating their priorities.

H. To charge and hold responsible all levels of management within the IHS for the implementation of this policy.

5–26.3 Roles

A. *Headquarters.* The Director, IHS, is responsible for providing overall guidance and direction to the Office of Urban Indian Health Programs (OUIHP) and ensuring that the IHS confers, to the maximum extent practicable, with UIOs in accordance with this policy.

The IHS has the responsibility to engage in an open and free exchange of information and opinions with UIOs that leads to mutual understanding and comprehension; and emphasizes trust, respect, and shared responsibility whenever a ''critical event or issue,'' as defined in this policy, arises in implementing or carrying out the IHCIA. When necessary, it is within the discretion of the Director, IHS, to make the final determination as to whether or not a specific event or issue qualifies as a ''critical event or issue,'' as defined in this policy.

The Director, OUIHP, is responsible for monitoring compliance with this policy, including submissions to the OUIHP conferring email address: *urbanconfer@ihs.gov*. The Director, OUIHP, will ensure that all levels of the IHS conduct regular official conferring sessions that are publicized through correspondence or, when necessary, **Federal Register** Notices (FRN), and receive conferring reports. The Director, OUIHP, will also receive and acknowledge receipt of written correspondence from UIOs describing potential ''critical events or issues'' arising in implementing or carrying out the IHCIA, the affected UIO(s), and the proposed conferring activity. Where applicable, OUIHP will notify all affected UIOs through a ''Dear Urban Indian Health Organization Director Letter'' and broadcast emails, and, if necessary, through the **Federal Register**, if the IHS will undertake any conferring activity. The notice will identify the issue, the method for conferring, and the timeline for the conferring activity. The Director, OUIHP, is responsible for preparing and submitting the annual IHS Confer with UIOs Report.

All IHS Headquarters Office Directors will provide leadership to identify potential ''critical events or issues'' arising in implementing or carrying out the IHCIA for which conferring with UIOs will be recommended to the Director, OUIHP, and assist the OUIHP in completion of the annual IHS Confer with UIOs Report, when necessary.

B. *Area Offices.* The Area Director is responsible for regional administration, management, evaluation, contract and

grant monitoring, and funding responsibilities for the IHCIA Title V-funded UIOs located in their Areas. The Area Director will provide the support and assistance to ensure that IHS confers, in accordance with this policy, with UIOs at the Area level. The Area Director will conduct regular official conferring sessions through bi-annual meetings and other conferring activities with UIOs. The Area Director will ensure that the Director, OUIHP, is informed of the Area conferring activities and outcomes for inclusion in the Annual IHS Confer with UIOs Report.

C. *Service Units.* The Service Unit Chief Executive Officer (CEO) is responsible for ensuring compliance with this policy by conferring with UIOs that are located in the Service Unit. The CEO shall provide the Service Unit conferring activities and results or outcomes through the Area Urban Coordinator, to the Area Director, who will report them to the OUIHP.

5–26.4 Confer Management

A. *Identification of Conferring Activities.* A potential ''critical event or issue'' arising in implementing or carrying out the IHCIA may be identified by either the IHS and/or UIOs.

(1) If a potential ''critical event or issue'' is identified by a UIO, written correspondence must be submitted to the Director, OUIHP, (with a copy to the appropriate Area Director) describing the event or issue, the affected UIO(s), and the proposed conferring activity. The Director, OUIHP, shall acknowledge receipt of the request within 15 business days. IHS will consider whether or not to confer with affected/potentially affected UIOs in response to this request.

(2) The Director, OUIHP, shall determine whether or not a specific event or issue arising in implementing or carrying out the IHCIA qualifies as a ''critical event or issue,'' as defined in this policy. The Director, OUIHP, shall provide an official response indicating the reason(s) why conferring will or will not be conducted. If the Director, OUIHP, determines that a ''critical event or issue'' has arisen in implementing or carrying out the IHCIA, the Director, OUIHP, shall, in the official response, identify the conferring activity that has been selected and the timeline for the activity. In addition, if the Director, OUIHP, determines that a ''critical event or issue'' has arisen in implementing or carrying out the IHCIA, the IHS will issue notices to all affected/potentially affected UIOs through correspondence such as a ''Dear Urban Indian Health Organization Director Letter'' and broadcast emails, as well as through a FRN, if applicable. Communication will identify the ''critical events or issues'' to be discussed, as well as the mechanism for conferring. When necessary, it is within the discretion of the Director, IHS, to make the final determination as to whether or not a specific event or issue qualifies as a ''critical event or issue,'' as defined in this policy.

B. *Conferring Activity.* The IHS will conduct regular, official conferring sessions through bi-annual meetings. The bi-annual meetings shall be publicized, both through correspondence such as a ''Dear Urban Indian Health Program Director Letter'' and broadcast emails, and, if necessary, through a FRN. The notices will include information such as the dates and locations of the conferring sessions, the agenda, and any ''critical events or issues'' that will be discussed. In addition to the bi-annual meetings, other conferring activities may occur throughout the year. In the event that a confer activity will be conducted, the degree and extent of the conferring and the mechanism for conferring shall depend upon several factors, including:

(1) the nature of the ''critical event or issue,''

(2) the number of potentially affected UIOs, and

(3) the most cost effective and efficient conferring mechanism, based on the nature of the ''critical event or issue'' and the number of potentially affected UIOs.

C. *Confer Mechanisms.* The IHS will consider the following confer mechanisms as options that provide the opportunity for an open and free exchange of information and opinions that lead to mutual understanding and comprehension and emphasize trust, respect, and shared responsibility:

(1) Mailings

(2) Teleconferences

(3) Regular or special program level conferring sessions

(4) Annual meetings, such as the annual Spring Urban Indian Health Leadership Conference

(5) Opportunities for comment, including submissions to *urbanconfer@ihs.gov*

(6) Face-to-face meetings, including meetings conducted at the Area Office level or at the national-level Indian health system meetings that include the IHS, Tribes, and UIO(s).

D. *Contract- and Grant-Specific Issues.* A UIO may request to meet one-on-one with an IHS representative to confer on issues specific to that UIO and its contract and grant awards from the IHS.

E. *Unresolved Issues.* Upon the completion of any of the conferring activities in this section, the IHS will document and follow-up on any unresolved issue(s) that would benefit from the ongoing involvement of the affected UIO(s). Documentation of the conferring process and outcomes will be maintained by the OUIHP and the Area Office(s) in which the affected UIO(s) are located.

F. *Annual IHS Confer with UIOs Report to HHS.* As part of the annual IHS Confer with UIOs Report to the Secretary, HHS, the IHS shall prepare and submit an annual report describing ''critical events or issues'' arising in implementing or carrying out the IHCIA, related conferring activities, and the results and outcomes of conferring with UIOs.

(1) The report shall address: Development of the urban Indian health program budget; development and implementation of urban Indian health program regulations and policies; and public health or environmental health critical events impacting UIOs.

(2) The report shall include a description of the ''critical event or issue(s)'' that was the subject of conferring, a description of the process that was used, a discussion of the recommendations that resulted from the conferring meeting(s), a list of any follow-up action items, a timeline for addressing these items, and a discussion of the level of satisfaction with the conferring process.

G. *Conflict Resolution.*

(1) The intent of this policy is to promote mutual understanding and comprehension, and to emphasize trust, respect, and shared responsibility between the IHS and UIOs.

(2) However, the IHS and UIOs may not always agree. Where such disagreement occurs, nothing in this policy creates a right of action against the IHS or the HHS for failure to comply with this policy.

5–26.5 Federal Advisory Committee Act

The Federal Advisory Committee Act (FACA) may apply to conferring activities. The FACA is implicated when an Agency establishes, manages, or controls a group that includes one or more participants who are not Federal employees for the purpose of obtaining the group's advice or recommendations on Agency issues or policies. The FACA imposes several procedural requirements on Federal Agencies that convene advisory committees. Although FACA may not apply to groups consisting solely of Tribal leaders serving on the group in their official

capacities, UIOs do not meet the requirements of the ''Tribal leader'' exemption. Accordingly, any conferring activities that qualify as an advisory committee under the FACA will be required to comply with the procedures set out in FACA.

5–26.6 Deliberative Process Privilege

Nothing in this policy waives the Government's deliberative process privilege. Examples of the government's deliberative process privilege are as follows:

(1) When the Secretary, HHS, is specifically requested by a member or members of Congress to respond to or report on proposed legislation, the development of such responses and of related policy is a part of the Executive Branch's deliberative process privilege and should remain confidential.

(2) In specified instances, when Congress requires the HHS to work with UIOs on the development of recommendations that may require legislation, such as reports, recommendations, or other products that are developed independent of a Department position, the development of which is governed by Office of Management and Budget Circular A–19.

Dated: July 20, 2012.

Yvette Roubideaux,

Director, Indian Health Service.

[FR Doc. 2012–18300 Filed 7–25–12; 8:45 am]

BILLING CODE 4165–16–P

DEPARTMENT OF HEALTH AND HUMAN SERVICES

National Institutes of Health

National Institute of Mental Health; Notice of Meeting

Pursuant to section 10(a) of the Federal Advisory Committee Act, as amended (5 U.S.C. App.), notice is hereby given of a conference call/Webinar meeting of the Interagency Autism Coordinating Committee (IACC).

The IACC Full Committee will be having an open meeting conference call/Webinar on Friday, July 27, 2012. The committee will discuss and vote on the establishment of subcommittees, as well as discuss future IACC activities and public comments that were received at the July 10, 2012 IACC meeting. The meeting will be accessible by Webinar and conference call.

Name of Committee: Interagency Autism Coordinating Committee (IACC).

Type of meeting: Open Meeting Conference Call and Webinar.

Date: July 27, 2012.

Time: 10:00 a.m. to 2:00 p.m. *Eastern Time*—Approximate end time.

Agenda: The committee will discuss and vote on the establishment of subcommittees, and discuss future IACC activities and public comments that were received at the July 10, 2012 IACC meeting.

Place: Webinar and conference call only; No in-person meeting.

Webinar Access: https://www2.gotomeeting.com/register/732043378.

Conference Call: Dial: 800–857–7423 Access code: 8875622.

Cost: The conference call and Webinar is free.

Contact Person: Ms. Lina Perez, Office of Autism Research Coordination, National Institute of Mental Health, NIH, 6001 Executive Boulevard, NSC, Room 6182A, Rockville, MD 20852. Phone: (301) 443–6040. Email: *IACCPublicInquiries@mail.nih.gov.*

Please Note: The meeting will be open to the public and accessible via Webinar and conference call. Members of the public who participate using the conference call phone number will be able to listen to the meeting but will not be heard. If you experience any technical problems with the conference call, please-email *IACCTechSupport@acclaroresearch.com* or call the IACC Technical Support Help Line at 443–680–0098.

If you experience any technical problems with the Web presentation tool, please contact GoToWebinar at (800) 263–6317. To access the Web presentation tool on the Internet the following computer capabilities are required: (A) Internet Explorer 5.0 or later, Netscape Navigator 6.0 or later or Mozilla Firefox 1.0 or later; (B) Windows® 2000, XP Home, XP Pro, 2003 Server or Vista; (C) Stable 56k, cable modem, ISDN, DSL or better Internet connection; (D) Minimum of Pentium 400 with 256 MB of RAM (Recommended); (E) Java Virtual Machine enabled (Recommended).

Accommodations Statement

Individuals who participate by using this electronic service and who need special assistance such as captioning or other reasonable accommodations should submit a request to the Contact Person listed on this notice at least 1 day prior to the meeting.

This meeting is being published less than 15 days prior to the meeting due to the urgent need of the committee to discuss committee structure, upcoming activities and emerging issues in the autism community.

Schedule subject to change.

Information about the IACC and a registration link for this meeting are available on the Web site: *www.iacc.hhs.gov*

Dated: July 20, 2012.

Carolyn A. Baum,

Program Analyst, Office of Federal Advisory Committee Policy.

[FR Doc. 2012–18192 Filed 7–25–12; 8:45 am]

BILLING CODE 4140–01–P

DEPARTMENT OF HEALTH AND HUMAN SERVICES

National Institutes of Health

National Institute of Environmental Health Sciences; Notice of Closed Meeting

Pursuant to section 10(d) of the Federal Advisory Committee Act, as amended (5 U.S.C. App.), notice is hereby given of the following meeting.

The meeting will be closed to the public in accordance with the provisions set forth in sections 552b(c)(4) and 552b(c)(6), Title 5 U.S.C., as amended. The grant applications and the discussions could disclose confidential trade secrets or commercial property such as patentable material, and personal information concerning individuals associated with the grant applications, the disclosure of which would constitute a clearly unwarranted invasion of personal privacy.

Name of Committee: Environmental Health Sciences Review Committee.

Date: August 22–23, 2012.

Time: 8:00 a.m. to 6:00 p.m.

Agenda: To review and evaluate grant applications.

Place: Hilton Garden Inn Durham Southpoint, 7007 Fayetteville Road, Durham, NC 27713.

Contact Person: Linda K Bass, Ph.D., Scientific Review Administrator, Scientific Review Branch, Division of Extramural Research and Training, Nat'l Institute of Environmental Health Sciences, P.O. Box 12233, MD EC–30, Research Triangle Park, NC 27709, (919) 541–1307.

(Catalogue of Federal Domestic Assistance Program Nos. 93.115, Biometry and Risk Estimation—Health Risks from Environmental Exposures; 93.142, NIEHS Hazardous Waste Worker Health and Safety Training; 93.143, NIEHS Superfund Hazardous Substances—Basic Research and Education; 93.894, Resources and Manpower Development in the Environmental Health Sciences; 93.113, Biological Response to Environmental Health Hazards; 93.114, Applied Toxicological Research and Testing, National Institutes of Health, HHS)

Dated: July 20, 2012.

Carolyn A. Baum,

Program Analyst, Office of Federal Advisory Committee Policy.

[FR Doc. 2012–18195 Filed 7–25–12; 8:45 am]

BILLING CODE 4140–01–P

DEPARTMENT OF HEALTH AND HUMAN SERVICES

National Institutes of Health

National Institute on Minority Health and Health Disparities; Notice of Closed Meeting

Pursuant to section 10(d) of the Federal Advisory Committee Act, as amended (5 U.S.C. App.), notice is hereby given of the following meetings.

The meeting will be closed to the public in accordance with the provisions set forth in sections 552b(c)(4) and 552b(c)(6), Title 5 U.S.C., as amended. The grant applications and the discussions could disclose confidential trade secrets or commercial property such as patentable materials, and personal information concerning individuals associated with the grant applications, the disclosure of which would constitute a clearly unwarranted invasion of personal privacy.

Name of Committee: National Institute on Minority Health and Health Disparities Special Emphasis Panel; NIMHD Community-Based Participatory Research (CBPR) Initiative in Reducing and Eliminating Health Disparities: Planning Phase (R24).

Date: August 6–8, 2012.

Time: 8:00 a.m. to 3:00 p.m.

Agenda: To review and evaluate grant applications.

Place: Hilton Rockville Hotel, 1750 Rockville Pike, Rockville, MD 20852.

Contact Person: Robert Nettey, M.D., Chief, Scientific Review Officer, National Institute on Minority Healthand Health Disparities, 6707 Democracy Blvd., Suite 800, Bethesda, MD 20892, (301) 496–3996 *netteyr@mail.nih.gov.*

This notice is being published less than 15 days prior to the meeting due to the timing limitations imposed by the review and funding cycle.

Dated: July 20, 2012.

Jennifer S. Spaeth,

Director, Office of Federal Advisory Committee Policy.

[FR Doc. 2012–18297 Filed 7–25–12; 8:45 am]

BILLING CODE 4140–01–P

DEPARTMENT OF HOUSING AND URBAN DEVELOPMENT

[Docket No. FR–5630–N–03]

Rental Assistance Demonstration: Final Program Notice

AGENCY: Office of the Assistant Secretary for Public and Indian Housing and Office of the Assistant Secretary for Housing—Federal Housing Commissioner, HUD.

ACTION: Notice.

SUMMARY: On March 8, 2012, HUD announced through notice in the **Federal Register** the partial implementation and request for comments on the full implementation of the statutorily authorized Rental Assistance Demonstration (RAD), which has two conversion components. RAD provides the opportunity to test the conversion of public housing and other HUD-assisted properties to long-term, project-based Section 8 rental assistance to achieve certain goals, including the preservation and improvement of these properties through access by public housing agencies (PHAs) and owners to private debt and equity to address immediate and long-term capital needs. RAD is also designed to test the extent to which residents have increased housing choices after the conversion, and the overall impact on the subject properties. The March 8, 2012 notice solicited public comment specifically on HUD's proposal for full implementation of the demonstration, but also invited comment on the policy and procedures that would govern partial implementation of the demonstration under the second component. This **Federal Register** notice published today announces full implementation of RAD, and the posting of the Final Program Notice (Final Program Notice, PIH–2012–32) on HUD's RAD Web site. As provided by the RAD statute, this notice addresses the requirement that the demonstration may proceed after publication of notice of its terms in the **Federal Register**. HUD's Final Program Notice takes into consideration the public comments received in response to HUD's March 8, 2012 solicitation of comments. This Notice summarizes the key changes made to the Program Notice (PIH 2012–18) issued on March 8, 2012. This notice also meets the RAD statutory requirement to publish waivers and alternative requirements authorized by the statute at least 10 days before they may take effect, which does not prevent the demonstration from proceeding immediately.

DATES: *Effective Dates:* Sections I–IV of this notice, and section II of the appendix to this notice, are effective July 26, 2012. The Final Program Notice, PIH–2012–32, except for the statutory and regulatory waivers specified in section I of the appendix to this notice, is effective July 26, 2012. The statutory and regulatory waivers in section I of the appendix to this notice are effective August 6, 2012. The conversion of Rent Supp and RAP properties under Section III of the Program Notice, which is updated by PIH–2012–32, was effective on March 8, 2012.

FOR FURTHER INFORMATION CONTACT: To assure a timely response, please electronically direct requests for further information to this email address: *rad@hud.gov.* Written requests may also be directed to the following address: Office of Public and Indian Housing—RAD Program, Department of Housing and Urban Development, 451 7th Street SW., Room 2000, Washington, DC 20410.

SUPPLEMENTARY INFORMATION:

I. Background

RAD, authorized by the Consolidated and Further Continuing Appropriations Act, 2012 (Pub. L. 112–55, signed November 18, 2011) (2012 Appropriations Act) allows for the conversion of assistance under the public housing, Rent Supplement (Rent Supp), Rental Assistance (RAP), and Moderate Rehabilitation (Mod Rehab) programs (collectively, ''covered programs'') to long-term, renewable assistance under Section 8. As provided in the **Federal Register** notice that HUD published on March 8, 2012, at 77 FR 14029, RAD has two separate components:

First Component. The first or competitive component of RAD allows projects funded under the public housing and Mod Rehab programs to convert to long-term Section 8 rental assistance contracts. Under this component of RAD, which is covered under Sections I and II of the Final Program Notice, PHAs and Mod Rehab owners may apply to HUD to convert to one of two forms of Section 8 Housing Assistance Payment (HAP) contracts: Project-based vouchers (PBVs) or project-based rental assistance (PBRA). No additional or incremental funds were authorized for this component of RAD. Therefore, PHAs and Mod Rehab owners will be required to convert assistance for projects at current subsidy levels. The 2012 Appropriations Act authorizes up to 60,000 units to convert assistance under this component, to be selected competitively. The 2012 Appropriations Act further specifies that HUD shall provide an opportunity for public comment on draft eligibility and selection criteria and on the procedures that will apply to the selection of properties that will participate in this component of the demonstration. This opportunity for comment was provided by the March 8, 2012 notice.

The First Component is effective July 26, 2012. The initial application period

for this component opens on September 24, 2012.

Second Component. The second component of RAD, which is covered under Sections II and III of the Final Program Notice, allows owners of projects funded under the Rent Supp, RAP and Mod Rehab programs with a contract expiration or termination due to prepayment occurring after October 1, 2006, and no later than September 30, 2013, to convert tenant protection vouchers (TPVs) to PBVs. There is no cap on the number of units that may be converted under this component of RAD and no requirement for competitive selection. While these conversions are not necessarily subject to current funding levels for each project or a unit cap similar to public housing conversions, the rents will be subject to rent reasonableness under the PBV program and are subject to the availability of overall appropriated amounts for TPVs.

The Second Component was effective on March 8, 2012, in Program Notice PIH 2012–18 published on the RAD Web site (*www.hud.gov/rad*), and is amended in part by the Final Program Notice, PIH–2012–32, also published on the RAD Web site. Applications for conversion of assistance may be submitted immediately.

Waivers and Alternative Requirements. The RAD statute provides that waivers and alternative requirements authorized under the first component shall be published by notice in the **Federal Register** no later than 10 days before the effective date of such notice. This notice carries out that statutory requirement. Under the second component of RAD, HUD is authorized to waive or alter the provisions of subparagraphs (C) and (D) of section 8(o)(13) of the United States Housing Act of 1937. Although waivers under the second component are not subject to a **Federal Register** publication requirement, the second component waivers are included in this notice as a matter of convenience. This list of these waivers and alternative requirements are in the appendix of this notice.

Because the provisions covered by these waivers and alternative requirements do not affect the application process, the later effective date of the first component waivers and alternative requirements does not have any impact on the initial application period, which, as noted above, opens on September 24, 2012.

II. Key Changes Made to HUD's Proposed RAD Demonstration

The following highlights key changes made to the Program Notice, PIH 2012–18, issued on March 8, 2012:

First Component

1. Project-Based Vouchers: Applicable to both public housing and Mod Rehab properties converting assistance to PBVs:

- Provides new language prohibiting any involuntary displacement in properties using PBVs for income-mixing purposes.
- Clarifies that in excess of 50% of the units in a project can be project-based if the units qualify for exemption as elderly, disabled, scattered site, or receiving supportive services. Further clarifies that services do not have to be provided directly by the PHA or owner.
- Grandfathers current residents from any requirement to receive supportive services in a property converting assistance to PBVs.
- Removes the proposed requirement that PBVs be subject to Uniform Physical Inspections Standards; rather such properties will continue to be subject to Housing Quality Standards (HQS).
- Provides a waiver of deconcentration requirements for all conversions to PBVs.

2. Choice-Mobility Option: For residents of both public housing and Mod Rehab properties for which assistance will be converted to Project Based Rental Assistance (PBRA):

- Provides new incentives to voucher agencies to encourage the provision of Choice-Mobility turnover vouchers to agencies without access to vouchers.
- Reduces the Choice-Mobility turnover cap from 20% to 15% at a particular project (i.e., PHAs or owners of Mod Rehab properties converting assistance could limit the percentage of households indicating a desire to move with the assistance of a Choice-Mobility voucher to no more than 15% of the total number of units in a project on an annual basis).
- Prioritizes the award of Choice-Mobility ''good-cause'' exemptions as needed to PHAs so that the first priority is given to small public housing-only PHAs, the second priority to other public housing-only PHAs, and the third priority to combined agencies that dedicate more than one-third of their total annual voucher turnover to homeless or veterans.
- Allows PHAs to apply for and potentially be awarded more than one project with a good-cause exemption from the Choice-Mobility requirement.

2. Allows small PHAs (defined as owning/managing a portfolio of public housing that is less than 250 units) to claim all projects as priority projects in the competition.

3. Expands the descriptions of required resident notifications, protections, rights, self-sufficiency services, and waiting list procedures.

4. Modifies the required Financing Plan benchmarks and processing requirements to be more compatible with a wide variety of sources of financing, including FHA insurance and Low Income Housing Tax Credits.

5. Eliminates the need to seek HUD approval of a change in project configuration prior to submission of a RAD application.

6. Increases the amount of pre-development funds that can be spent on a proposed public housing conversion from $50,000 to $100,000.

7. Provides a cap of 1,200 on the number of public housing mixed-finance units that could convert assistance under RAD; current and future Choice Neighborhoods Implementation Grant awardees seeking to convert assistance under RAD would not be subject to this cap. Specifies the eligibility for projects developed with HOPE VI grants is limited to those with a Date of Full Availability (DOFA) prior to October 1, 2002.

8. Modifies the application ranking factor for capital needs so that the point scale accounts for a broader range of capital needs that are proposed to be undertaken.

9. Allows Mod Rehab owners to designate a priority project application.

10. Provides expanded detail on the transfer of HAP contracts to other projects.

Second Component

1. Allows, for prospective conversions of assistance for Rent Supp and RAP, an owner to secure another agency to administer the PBVs in the event that that the local agency does not consent to administering such assistance.

2. Provides additional instruction on the inclusion of unassisted units in the event of a preservation-eligible mortgage prepayment that triggers provision of Enhanced Vouchers.

3. Clarifies that Rent Supp or RAP contract units occupied during the 24 months prior to contract termination may be included in a RAD conversion of assistance.

4. Creates a process for allocating limited TPV resources to projects with Rent Supp or RAP contracts with expiration dates after September 30, 2013 when an owner requests to prepay the mortgage.

5. Reserves the right for HUD to review and apply deconcentration requirements when a proposed conversion of assistance under RAD would result in an increase in the number of units that could-potentially receive project-based rental assistance than would be the case in a standard (non-RAD) project-basing of assistance.

6. Enhances tenant consultation requirements by including a requirement for notification of legitimate tenant organizations.

7. Clarifies requirements for 12-month notification of opt-out for Mod Rehab projects.

8. Establishes a new centralized submission processing system to allow for ease of administration.

Other Significant Changes

1. Updates various deadlines and implementation schedules, including the deadline for receipt of applications under the Initial Application Period under the first or competitive component of RAD.

2. Clarifies that the related contractual documents, including the Use Agreement and Housing Assistance Payments (HAP) contracts will be posted for comment following publication of the Final Notice.

III. The Final Program Notice and Reponses to Public Comments

The Final Program Notice for RAD, PIH–2012–32, can be found at *www.hud.gov/rad.* Also posted on HUD's RAD Web site is a summary of the public comments received in response to the March 8, 2012 notice and HUD's responses to the comments.

IV. Environmental Review

A Finding of No Significant Impact with respect to the environment was made in connection with the Program Notice issued on March 8, 2012, and in accordance with HUD regulations in 24 CFR part 50 that implement section 102(2)(C) of the National Environmental Policy Act of 1969 (42 U.S.C. 4332(2)(C)). The Finding remains applicable to the Final Program Notice and is available for public inspection during regular business hours in the Regulations Division, Office of General Counsel, Department of Housing and Urban Development, 451 7th Street SW., Room 10276, Washington, DC 20410–0500. Due to security measures at the HUD Headquarters building, please schedule an appointment to review the Finding by calling the Regulations Division at 202–402–3055 (this is not a toll-free number). Individuals with speech or hearing impairments may access this number via TTY by calling the Federal Relay Service at 800–877–8339.

Dated: July 16, 2012.

Sandra B. Henriquez,

Assistant Secretary for Public and Indian Housing.

Carol J. Galante,

Acting Assistant Secretary for Housing—Federal Housing Commissioner.

Appendix—RAD Waivers and Alternative Requirements

The RAD statute provides that waivers and alternative requirements authorized under the first component shall be published by notice in the **Federal Register** no later than 10 days before the effective date of such notice. This appendix carries out that statutory requirement. Under the second component of RAD, HUD is authorized to waive or alter the provisions of subparagraphs (C) and (D) of section 8(o)(13) of the United States Housing Act of 1937. Although waivers under the second component are not subject to a **Federal Register** publication requirement, the second component waivers are included in this appendix as a matter of convenience. Additionally, the RAD statute imposes certain requirements that must be followed under the demonstration, such as requiring long-term renewable use and affordability restrictions for assisted units in properties that convert from assistance under section 9. The RAD statute also authorizes HUD to establish requirements for converted assistance under the demonstration. HUD has used this authority, for example, by establishing in the Final Notice the requirements of 24 CFR part 880, with modifications appropriate for the converted assistance under the demonstration. These types of requirements are not subject to the publication requirement applicable to the waiver and alternative requirements listed in this appendix.

The list of waivers and alternative requirements, as described above, follows:

I. Public Housing Conversions

A. Changes to Requirements for Public Housing

Use of Public Housing Funds. Provision affected: Section 9 of the United States Housing Act of 1937 (42 U.S.C. 1437g). *Alternative requirements:* PHAs are permitted under the Demonstration to use available public housing funding, including Operating Reserves, Capital Funds, and Replacement Housing Factor (RHF) funds as an additional source of capital to support conversion, whether for rehabilitation or new construction. Eligible conversion-related uses for these funds include pre-development, development, or rehabilitation costs and establishment of a capital replacement reserve or operating reserve. These funds must be identified in the Financing Plan submitted to HUD for review. A PHA may not use public housing program funds, or any other funds, to augment the contract rent on a project following conversion.

A PHA may expend up to $100,000 in public housing program funds in related pre-development conversion costs per project. A PHA may utilize other non-federal funds to support predevelopment costs. Predevelopment assistance may be used to pay for materials and services related to proposed development and may also be used for preliminary development work. Public housing program funds spent prior to the effective date of the HAP are subject to public housing procurement rules.

In the case of a PHA that is converting all units under ACC, there is no restriction on the amount of public housing funds that may be contributed to the converting project(s) at the point of conversion, i.e., the PHA may convey all program funds to the project undergoing conversion. In the case where the PHA will continue to maintain other units in its inventory under public housing ACC, a contribution to the converting project of Operating Funds that exceeds the average amount the project has held in Operating Reserves over the past three years will trigger a subsidy layering review under 24 CFR 4.13. Similarly, any contribution of Capital Funds, including RHF funds, will trigger a subsidy layering review.

Following execution of the HAP, a PHA may not contribute public housing program funds to the covered project unless such funding has been identified in the approved Financing Plan.

Additional Fees. Provisions affected: 24 CFR 909.190(h) and 905.10(i). *Alternative Requirements:* PHAs may not apply for Asset Repositioning Fees and will be ineligible to receive Capital Fund RHF grants for units or projects with converted assistance.

Faircloth Limit. Provision affected: Section 9(g)(3) of the United States Housing Act of 1937 (42 U.S.C. 1437g(g)(3)). *Alternative Requirements:* Conversion of assistance will reduce a PHA's Faircloth Limit number.

Significant Amendments to PHA Plans. Provision affected: 24 CFR part 903. *Alternative Requirements:* In addition to the information already required by 24 CFR part 903 for PHA Plan amendments, all PHAs must include the following information in their significant amendment:

1. A description of the units to be converted, including the number of units, the bedroom distribution of units, and the type of units (e.g., family, elderly/disabled, or elderly-only);

2. Any change in the number of units that is proposed as part of the conversion, including de minimis unit reductions and unit reductions that are exempt from the de minimis cap;

3. Any change in the bedroom distribution of units that is proposed as part of the conversion;

4. Any changes in the policies that govern eligibility, admission, selection, and occupancy of units at the project after it has been converted. This includes any waiting list preferences that will be adopted for the converted project; and

5. If there will be a transfer of assistance at the time of conversion, the significant amendment must include the location (including census tract) of any converted units that will be transferred off-site, as well as the information described above for the units that will be transferred. In addition, if

some, but not all of the assisted units will be transferred to another site at the time of the conversion, the significant amendment must also include a description of how the waiting list will be transferred and how households will be selected for the transfer.

Section 4 Debt. Provision affected: Section 4 of the United States Housing Act of 1937 (42 U.S.C. 1437b). *Alternative Requirements:* For any outstanding principal balance and interest due on loans held by HUD issued to finance original development or modernization of the covered project, HUD will exercise its waiver authority under Section 4 of the Act to forgive the loan upon conversion.

ROSS–SC. Provisions affected: Section 34(a) of the United States Housing Act of 1937 (42 U.S.C. 1437z-6(a)). *Alternative Requirements:* The provision is waived to permit current ROSS–SC grantees to finish out their current ROSS–SC grants once their housing is converted under RAD.

B. Changes to PBV Requirements for Public Housing Conversions

Maximum Amount of PBV Assistance. Provisions affected: Section 8(o)(13)(B) of the United States Housing Act of 1937 (42 U.S.C. 1437f(13)(B)); 24 CFR 983.6. *Alternative Requirements:* None. The provisions are waived.

Cap on PBV Units per Project and Supportive Services Requirement. Provisions affected: Section 8(o)(13)(D) of the United States Housing Act of 1937 (42 U.S.C. 1437f(13)(D)); 24 CFR 983.56, 983.257(c), and 983.261(a) and (d). *Alternative Requirements:* The 25 percent limitation on the number of units that may receive PBV assistance in a project without the provision of supportive services is increased to 50 percent. An owner may still project-base 100 percent of the units provided at least 50 percent of the units at the project qualify for the exceptions for elderly, disabled, or families receiving supportive services, or are within single-family buildings.

Families living in units subject to a proposed RAD conversion must be given the option to receive supportive services. If supportive services are declined by the household, the unit shall remain under the HAP contract, the household shall not be terminated from the PBV program, and the decision to decline an offer to receive supportive services shall not represent a ground for lease termination. Once the initial household residing in the excepted unit under RAD vacates such unit, all PBV program requirements related to the required receipt of supportive services shall apply.

Selection Procedures. Provision affected: 24 CFR 983.51. *Alternative Requirements:* Selections shall be made in accordance with program requirements detailed in the Program Notice.

Site Selection. Provisions affected: Section 8(o)(13)(C)(ii) of the United States Housing Act of 1937 (42 U.S.C. 1437f(13)(C)); 24 CFR 983.57(b)(1) and (c). *Alternative Requirements:* None. The provisions are waived. However, standards in 24 CFR 983.57 will apply to all off-site replacement projects and transfers of assistance.

Length of PBV Contract Term. Provisions affected: Section 8(o)(13)(F) of the United States Housing Act of 1937 (42 U.S.C. 1437f(13)(F)); 24 CFR 983.205(a). *Alternative Requirements:* The initial HAP term shall have an initial term of 15 years, up to 20 years upon request of the PHA and with approval of the agency administering the vouchers.

Initial Contract Rent Setting. Provisions affected: 24 CFR 983.301. *Alternative Requirements:* Initial contract rents generally cannot exceed the lower of: (a) Current funding (adjusted for bedroom size); (b) the reasonable rent (as defined under 24 CFR 983.303); (c) up to 110 percent of the applicable FMR (or applicable Exception Rent Payment Standard), minus any utility allowance; or (d) the rent requested by the owner.

Adjustment of Contract Rents. Provisions affected: Section 8(o)(13)(I) of the United States Housing Act of 1937 (42 U.S.C. 1437f(13)(I)); 24 CFR 983.301 and 983.302. *Alternative Requirements:* Contract rents will be adjusted annually by HUD's Operating Cost Adjustment Factor (OCAF) at each anniversary of the HAP contract, subject to the availability of appropriations for each year of the contract term. The rent to owner may at no time exceed the reasonable rent charged for comparable unassisted units in private market, as determined by the Contract Administrator in accordance 24 CFR 983.303. However, the rent to owner shall not be reduced below the initial rent to owner for dwelling units under the initial HAP contract except in limited circumstances.

Renewal of Lease. Provisions affected: 24 CFR 983.257(b)(3). *Alternative Requirements:* The PHA must renew all leases upon lease expiration, unless cause exists.

Phase-in of Tenant Rent Increases. Provisions affected: Section 3(a)(1) of the United States Housing Act of 1937 (42 U.S.C. 1437a(a)(1)); 24 CFR 983.3 and 983.353(b)(1). *Alternative Requirements:* Monthly rent increases more than the greater of 10 percent or $25 that result solely from conversion of assistance shall be phased in over 3 years, which a PHA may extend to 5 years.

Termination Notification for Tenants. Provision affected: 24 CFR 983.257. *Alternative Requirements:* In addition to the current requirements, the termination procedure for RAD conversions to PBV will require that PHAs provide adequate written notice of termination of the lease which shall not be less than:

i. A reasonable period of time, but not to exceed 30 days:

- If the health or safety of other tenants, PHA employees, or persons residing in the immediate vicinity of the premises is threatened; or
- In the event of any drug-related or violent criminal activity or any felony conviction;

ii. 14 days in the case of nonpayment of rent; and

iii. 30 days in any other case, except that if a State or local law provides for a shorter period of time, such shorter period shall apply.

Grievance Process. Provision affected: Section 6 of the United States Housing Act of 1937 (42 U.S.C. 1437d); 24 CFR 982.555. *Alternative Requirements:* In addition to current program rules regarding informal hearings, the following additional rules apply:

i. In addition to reasons that require an opportunity for an informal hearing given in 24 CFR 982.555(a)(1)(i)–(vi), an opportunity for an informal hearing must be given to residents for any dispute that a resident may have with respect to contract administrator or owner action in accordance with the individual's lease or RAD PBV requirements that adversely affect the resident's rights, obligations, welfare, or status.

- For any hearing required under 24 CFR 982.555(a)(1)(i)–(vi), the contract administrator will perform the hearing, as is the current standard in the program.
- For any additional hearings required under RAD, the PHA (as owner) will perform the hearing.

ii. An informal hearing will not be required for class grievances or to disputes between residents not involving the owner or contract administrator. This hearing requirement shall not apply to and is not intended as a forum for initiating or negotiating policy changes between a group or groups of residents and the PHA (as owner) or contract administrator.

iii. The PHA (as owner) give residents notice of their ability to request an informal hearing as outlined in 24 CFR 982.555(c)(1) for informal hearings that will address circumstances that fall outside of the scope of 24 CFR 982.555(a)(1)(i)–(vi).

iv. The PHA (as owner) provide opportunity for an informal hearing before an eviction.

Davis-Bacon, Section 3. Provisions affected: Section 3 of the Housing and Urban Development Act of 1968(12 U.S.C. 1701u); 24 CFR 983.52(a); 24 CFR part 135. *Alternative Requirements:* The Davis-Bacon Act and section 3 shall apply to all initial repairs that are identified in the Financing Plan to the extent that such repairs qualify as construction or rehabilitation, regardless of whether the project qualifies as ''existing housing.'' Developmental requirements under 24 CFR 983.154 and fair housing provisions under 24 CFR 983.152(c)(vi) continue to apply.

Waiting Lists. Provision affected: 24 CFR 982.251(c)(2). *Alternative Requirements:* If a project-specific waiting list for the project does not exist, the PHA shall establish a waiting list in accordance 24 CFR 903.7(b)(2)(ii)–(iv) to ensure that applicants on the PHA's public housing community-wide waiting list have been offered placement on the converted project's initial waiting list. For the purpose of establishing the initial waiting list, PHAs have the discretion to determine the most appropriate means of informing applicants on the public housing waiting list given the number of applicants, PHA resources, and community characteristics of the proposed conversion under RAD. Such activities should be pursuant to the PHA's policies for waiting list management, including the obligation to affirmatively further fair housing.

A PHA may consider contacting every applicant on the public housing waiting list via direct mailing; advertising the availability of housing to the population that is less

likely to apply, both minority and non-minority groups, through various forms of media (i.e., radio stations, posters, newspapers) within the marketing area, informing local non-profit entities and advocacy groups (i.e., disability rights groups); and conducting other outreach as appropriate. Applicants on the agency's centralized public housing waiting list who wish to be placed onto the newly-established waiting list are done so in accordance with the date and time of their original application to the centralized public housing waiting list. Any activities to contact applicants on the public housing waiting list must be conducted accordance with the requirements for effective communication with persons with disabilities at 24 CFR 8.6 and the obligation to provide meaningful access for persons with limited English proficiency (LEP).

After the initial waiting list has been established, the PHA shall administer its waiting list for the converted project in accordance with 24 CFR 983.251(c).

AHAP. Provision affected: 24 CFR part 983 subpart D. *Alternative Requirements:* None. There will be no AHAP contract, so all references to an AHAP are waived.

C. Changes to PBRA Requirements for Public Housing Conversions

Length of PBRA Contract Term. Provision affected: Section 8(d)(2)(A) of the United States Housing Act of 1937 (42 U.S.C. 1437f(d)(2)(A)). *Alternative Requirements:* Covered projects shall have an initial HAP term of 20 years.

Initial Contract Rent Setting. Provisions affected: Sections 8(c)(1), 8(c)(5) of the United States Housing Act of 1937 (42 U.S.C. 1437f(c)(1) and (c)(5)). *Alternative Requirements:* At the time that assistance will be converted, initial contract rents will be established based on the funding for which a project is currently eligible, including pro-rated Operating Subsidy eligibility, the portion of the PHA's Capital Fund Formula Grant attributable to the project, and tenant rents. Initial contract rents will be capped at the lesser of (a) current funding; or (b) 120 percent of the Section 8 FMR, adjusted by the number of bedrooms, and after subtracting any applicable utility allowance. However, when current funding exceeds 120 percent of the FMR but where the PHA believes that such rents are below the comparable market rent, the PHA may request an exception under which the project may receive rents in excess of 120 percent of the FMR but not in excess of the lower of comparable market rents or 150 percent of FMR. HUD will grant such a request only when HUD determines that a Rent Comparability Study (RCS), which the PHA must procure and pay for, establishes that current rents are below comparable market rents. Any such determination will be made by HUD in its sole and absolute discretion. Where contract rents are at or below 120 percent of the FMR, no RCS is required.

Adjustment of Contract Rents. Provision affected: Section 8(c)(2) of the United States Housing Act of 1937 (42 U.S.C. 1437f(c)(2)). *Alternative Requirements:* Contract rents will be adjusted annually by HUD's OCAF at each anniversary of the HAP contract, subject to the availability of appropriations for each year of the contract term.

Phase-in of Tenant Rent Increases. Provision affected: Section 3(a)(1) of the United States Housing Act of 1937 (42 U.S.C. 1437a(a)(1)). *Alternative Requirements:* Monthly rent increases more than the greater of 10 percent or $25 that result solely from conversion of assistance shall be phased in over
3 years, which a PHA may extend to
5 years.

Grievance Process. Provision affected: 24 CFR part 245. *Alternative Requirements:* In addition to current program rules, the following additional rules apply:

i. Residents be provided with notice of the specific grounds of the proposed owner adverse action, as well as their right to an informal hearing with the PHA (as owner);

ii. Residents will have an opportunity for an informal hearing with an impartial member of PHA's staff within a reasonable period of time;

iii. Residents will have the opportunity to be represented by another person of their choice, to ask questions of witnesses, have others make statements at the hearing, and to examine any regulations and any evidence relied upon by the owner as the basis for the adverse action. With reasonable notice to the owner, prior to hearing and at the residents' own cost, resident may copy any documents or records related to the proposed adverse action; and

iv. PHAs (as owners) provide the resident with a written decision within a reasonable period of time stating the grounds for the adverse action, and the evidence the owner relied on as the basis for the adverse action.

The PHA will be bound by decisions from these hearings, except if the:

i. Hearing concerns a matter that exceeds the authority of the impartial party conducting the hearing.

ii. Decision is contrary to HUD regulations or requirements, or otherwise contrary to federal, State, or local law.

If the PHA (as owner) determines that it is not bound by a hearing decision, the PHA must promptly notify the resident of this determination, and of the reasons for the determination.

Davis-Bacon, Section 3. Provisions affected: Section 3 of the Housing and Urban Development Act of 1968 (12 U.S.C. 1707u); 24 CFR 983.52(a); part 135. *Alternative Requirements:* The Davis-Bacon Act and Section 3 shall apply to all initial repairs that are identified in the Financing Plan to the extent that such repairs qualify as construction or rehabilitation. Davis-Bacon only applies for projects with nine or more units.

Choice-Mobility. Provision affected: 24 CFR 985.3(h). *Alternative Requirements:* HUD's goal is to have 100 percent of residents in the Demonstration offered a Choice-Mobility option within a reasonable time after conversion. However, as HUD recognizes that not all PHAs will have vouchers sufficient to support this effort, HUD will provide ranking factor points where a voucher agency has committed to provide vouchers to the covered PBRA project of a PHA without a voucher program. Additionally, voucher agencies that make such a commitment will receive:

- Priority points for new HCV FSS coordinator positions in an upcoming FSS competition and
- The bonus points provided under the Section Eight Management Assessment Program (SEMAP) for deconcentration.

II. Mod Rehab Conversions

A. Changes to PBV Requirements for Mod Rehab Conversions (Competitive)

Maximum Amount of PBV Assistance. Provisions affected: Section 8(o)(13)(B) of the United States Housing Act of 1937 (42 U.S.C. 1437f(13)(B)); 24 CFR 983.6. *Alternative Requirements:* None. The provisions are waived.

Cap on PBV Units per Project and Supportive Services Requirement. Provisions affected: Section 8(o)(13)(D) of the United States Housing Act of 1937 (42 U.S.C. 1437f(13)(D)); 24 CFR 983.56, 983.257(c), and 983.261(a) and (d). *Alternative Requirements:* The 25 percent limitation on the number of units that may receive PBV assistance in a project without the provision of supportive services is increased to 50 percent. An owner may still project-base 100 percent of the units provided at least 50 percent of the units at the project qualify for the exceptions for elderly, disabled, or families receiving supportive services, or are within single-family buildings.

Households living in units subject to a proposed RAD conversion must be given the option to receive supportive services. If supportive services are declined by the household, the unit shall remain under the HAP contract, the household shall not be terminated from the PBV program, and the decision to decline an offer to receive supportive services shall not represent a ground for lease termination. Once the initial household residing in the excepted unit under RAD vacates such unit, all PBV program requirements related to the required receipt of supportive services shall apply.

Selection Procedures. Provision affected: 24 CFR 983.51. *Alternative Requirements:* Selections shall be made in accordance with program requirements detailed in the Program Notice.

Site Selection. Provisions affected: Section 8(o)(13)(C)(ii) of the United States Housing Act of 1937 (42 U.S.C. 1437f(13)(C)); 24 CFR 983.57(b)(1) and (c). *Alternative Requirements:* None. The provisions are waived. However, standards in 24 CFR 983.57 will apply to all off-site replacement projects and transfers of assistance.

Length of PBV Contract Term. Provisions affected: Section 8(o)(13)(F) of the United States Housing Act of 1937 (42 U.S.C. 1437f(13)(F)); 24 CFR 983.205(a). *Alternative Requirements:* The initial HAP term shall have an initial term of 15 years, up to 20 years upon request of the PHA and with approval of the agency administering the vouchers.

Initial Contract Rent Setting. Provisions affected: 24 CFR 983.301. *Alternative Requirements:* Initial contract rents generally cannot exceed the lower of: (a) Current

funding (adjusted for bedroom size); (b) the reasonable rent (as defined under 24 CFR 983.303); (c) up to 110 percent of the applicable FMR (or applicable Exception Rent Payment Standard), minus any utility allowance; or (d) the rent requested by the owner.

Adjustment of Contract Rents. Provisions affected: Section 8(o)(13)(I) of the United States Housing Act of 1937 (42 U.S.C. 1437f(13)(I)); 24 CFR 983.301 and 983.302. *Alternative Requirements:* Contract rents will be adjusted annually by HUD's Operating Cost Adjustment Factor (OCAF) at each anniversary of the HAP contract, subject to the availability of appropriations for each year of the contract term. The rent to owner may at no time exceed the reasonable rent charged for comparable unassisted units in private market, as determined by the Contract Administrator in accordance 24 CFR 983.303. However, the rent to owner shall not be reduced below the initial rent to owner for dwelling units under the initial HAP contract except in limited circumstances.

B. Changes to PBRA Requirements for Mod Rehab Conversions

Length of PBRA Contract Term. Provision affected: Section 8(d)(2)(A) of the United States Housing Act of 1937 (42 U.S.C. 1437f(d)(2)(A)). *Alternative Requirements:* Covered projects shall have an initial HAP term of 20 years.

Initial Contract Rent Setting. Provisions affected: Sections 8(c)(1), 8(c)(5) of the United States Housing Act of 1937 (42 U.S.C. 1437f(c)(1) and (c)(5)). *Alternative Requirements:* At the time that assistance will be converted, initial contract rents will be established based on the funding for which a project is currently eligible, including pro-rated Operating Subsidy eligibility, the portion of the PHA's Capital Fund Formula Grant attributable to the project, and tenant rents. Initial contract rents will be capped at the lesser of (a) current funding; or (b) 120 percent of the Section 8 FMR, adjusted by the number of bedrooms, and after subtracting any applicable utility allowance. However, when current funding exceeds 120 percent of the FMR but where the PHA believes that such rents are below the comparable market rent, the PHA may request an exception under which the project may receive rents in excess of 120 percent of the FMR but not in excess of the lower of comparable market rents or 150 percent of FMR. HUD will grant such a request only when HUD determines that a Rent Comparability Study (RCS), which the PHA must procure and pay for, establishes that current rents are below comparable market rents. Any such determination will be made by HUD in its sole and absolute discretion. Where contract rents are at or below 120 percent of the FMR, no RCS is required.

Adjustment of Contract Rents. Provision affected: Section 8(c)(2) of the United States Housing Act of 1937 (42 U.S.C. 1437f(c)(2)). *Alternative Requirements:* Contract rents will be adjusted annually by HUD's OCAF at each anniversary of the HAP contract, subject to the availability of appropriations for each year of the contract term.

Choice-Mobility. Provision affected: 24 CFR 985.3(h). *Alternative Requirements:* HUD's goal is to have 100 percent of residents in the Demonstration offered a Choice-Mobility option within a reasonable time after conversion. However, as HUD recognizes that not all PHAs will have vouchers sufficient to support this effort, HUD will provide ranking factor points where a voucher agency has committed to provide vouchers to the covered PBRA project of a PHA without a voucher program. Additionally, voucher agencies that make such a commitment will receive:

- Priority points for new HCV FSS coordinator positions in an upcoming FSS competition and
- The bonus points provided under the Section Eight Management Assessment Program (SEMAP) for deconcentration.

C. Changes to PBV Requirements for Mod Rehab Conversions (Noncompetitive)

Portfolio Limit on PBVs. Provision affected: Section 8(o)(13)(B) of the United States Housing Act of 1937 (42 U.S.C. 1437f(o)(13)(B); 24 CFR 983.6. *Alternative Requirements:* None. The statutory requirement does not apply, so HUD waives the corresponding regulation.

Cap on PBV Units per Project and Supportive Services Requirement. Provisions affected: Section 8(o)(13)(D) of the United States Housing Act of 1937 (42 U.S.C. 1437f(13)(D)); 24 CFR 983.56, 983.257(c), and 983.261(a) and (d). *Alternative Requirements:* The 25 percent limitation on the number of units that may receive PBV assistance in a project without the provision of supportive services is increased to 50 percent. An owner may still project-base 100 percent of the units provided at least 50 percent of the units at the project qualify for the exceptions for elderly, disabled, scattered sites, or families receiving supportive services, or are within single-family buildings.

Households living in units subject to a proposed RAD conversion must be given the option to receive supportive services. If supportive services are declined by the household, the unit shall remain under the HAP contract, the household shall not be terminated from the PBV program, and the decision to decline an offer to receive supportive services shall not represent a ground for lease termination. Once the initial household residing in the excepted unit under RAD vacates such unit, all PBV program requirements related to the required receipt of supportive services shall apply.

Site Selection. Provisions affected: Section 8(o)(13)(C)(ii) of the United States Housing Act of 1937 (42 U.S.C. 1437f(13)(C)); 24 CFR 983.57(b)(1) and (c). *Alternative Requirements:* None. The provisions are waived. However, standards in 24 CFR 983.57 will apply to all off-site replacement projects and transfers of assistance. Further, HUD reserves the right to assess and consider as part of the selection process the impact of the proposed RAD conversion on deconcentration of poverty in properties where the RAD conversion would result in an increase in the number of units receiving project-based rental assistance.

Selection Procedures. Provision affected: 24 CFR 983.51. *Alternative Requirements:* Selections shall be made in accordance with program requirements detailed in the Program Notice.

III. Rent Supplement and Rental Assistance Payment Project Conversions

Portfolio Limit on PBVs. Provision affected: Section 8(o)(13)(B) of the United States Housing Act of 1937 (42 U.S.C. 1437f(o)(13)(B); 24 CFR 983.6. *Alternative Requirements:* None. The statutory requirement does not apply, so HUD waives the corresponding regulation.

Cap on PBV Units per Project and Supportive Services Requirement. Provisions affected: Section 8(o)(13)(D) of the United States Housing Act of 1937 (42 U.S.C. 1437f(13)(D)); 24 CFR 983.56, 983.257(c), and 983.261(a) and (d). *Alternative Requirements:* The 25 percent limitation on the number of units that may receive PBV assistance in a project without the provision of supportive services is increased to 50 percent. Households living in units subject to a proposed RAD conversion must be given the option to receive supportive services. Once the initial household residing in the excepted unit under RAD vacates such unit, all PBV program requirements related to the required receipt of supportive services shall apply.

Site Selection. Provisions affected: Section 8(o)(13)(C)(ii) of the United States Housing Act of 1937 (42 U.S.C. 1437f(13)(C)); 24 CFR 983.57(b)(1) and (c). *Alternative Requirements:* None. The provisions are waived. However, standards in 24 CFR 983.57 will apply to all off-site replacement projects and transfers of assistance. Further, HUD reserves the right to assess and consider as part of the selection process the impact of the proposed RAD conversion on deconcentration of poverty in properties where the RAD conversion would result in an increase in the number of units receiving project-based rental assistance.

Selection Procedures. Provision affected: 24 CFR 983.51. *Alternative Requirements:* Selections shall be made in accordance with program requirements detailed in the Program Notice.

[FR Doc. 2012–18307 Filed 7–25–12; 8:45 am]

BILLING CODE 4210–67–P

DEPARTMENT OF THE INTERIOR

Office of the Secretary

Secretarial Commission on Indian Trust Administration and Reform

AGENCY: Office of the Secretary, Interior.

ACTION: Notice of meeting.

SUMMARY: The Office of the Secretary is announcing that the Secretarial Commission on Indian Trust Administration and Reform (the Commission) will hold a public Webinar meeting on August 13, 2012. The Commission has gathered valuable information to begin work on various subcommittees to explore the definitions and foundation of the trust

relationship, explore other trust models, review reports and various documents and identify recommendations from previous studies, and consider the nature and scope of necessary audits of the Department's trust administration systems. The Secretarial Commission's charter requires the Commission to provide well-reasoned and factually based recommendations for potential improvements to the existing management and administration of the trust administration system. The Commission is committed to early public engagement and welcomes your participation in these important meetings.

DATES: The Commission's Webinar meeting will begin at 2 p.m. and end at 4 p.m. Eastern Time on August 13, 2012. Attendance is open to the public, but limited space is available. Members of the public who wish to attend must RSVP by August 10, 2012, by registering at *https://www1.gotomeeting.com/register/876785297*. Instructions for joining the Webinar will be emailed after registration occurs.

FOR FURTHER INFORMATION CONTACT: The Designated Federal Official, Lizzie Marsters, Chief of Staff to the Deputy Secretary, Department of the Interior, 1849 C Street NW., Room 6119, Washington, DC 20240; or email to *Lizzie_Marsters@ios.doi.gov*.

SUPPLEMENTARY INFORMATION: As part of President Obama's commitment to fulfilling this nation's trust responsibilities to Native Americans, the Secretary of the Interior (Secretary) appointed five members to serve on the Secretarial Commission on Indian Trust Administration and Reform, established under Secretarial Order No. 3292, dated December 8, 2009. The Commission will play a key role in the Department's ongoing efforts to empower Indian nations and strengthen nation-to-nation relationships.

The Commission will complete a comprehensive evaluation of the Department's management and administration of the trust assets within a two-year period and offer recommendations to the Secretary on how to improve in the future. The Commission will:

(1) Conduct a comprehensive evaluation of the Department's management and administration of the trust administration system;

(2) Review the Department's provision of services to trust beneficiaries;

(3) Review input from the public, interested parties, and trust beneficiaries, which should involve conducting a number of regional listening sessions;

(4) Consider the nature and scope of necessary audits of the Department's trust administration system;

(5) Recommend options to the Secretary for improving the Department's management and administration of the trust administration system based on information obtained from the Commission's activities, including whether any legislative or regulatory changes are necessary to permanently implement any suggested improvements; and

(6) Consider the provisions of the American Indian Trust Fund Management Reform Act of 1994 providing for the termination of the Office of the Special Trustee for American Indians, and make recommendations to the Secretary regarding termination.

The following items will be on the agenda:

- Trust Commission Operations:
  - Review, discussion, and approval of June 2012 meeting minutes;
  - Updates on action items from June 2012 meeting;
  - Report on Commission outreach since June;
- Discussion of preliminary, draft Commission recommendations;
- Discussion of Commission Subcommittee progress and products;
- Review of and discussion of September meeting agenda topics and related outreach activities;
- Review action items of resulting from Webinar call; and
- Public comments.

Written comments may be sent to the Designated Federal Official listed in the **FOR FURTHER INFORMATION CONTACT** section above. To review all related material on the Commission's work, please refer to *http://www.doi.gov/cobell/commission/index.cfm*. All meetings are open to the public.

Dated: July 19, 2012.

David J. Hayes,

Deputy Secretary.

[FR Doc. 2012–18248 Filed 7–25–12; 8:45 am]

BILLING CODE 4310–W7–P

DEPARTMENT OF THE INTERIOR

Geological Survey

[GX12GB009PAMR00]

Agency Information Collection Activities: Submitted for Office of Management and Budget (OMB) Review; Comment Request

AGENCY: U.S. Geological Survey (USGS), Interior.

ACTION: Notice of an extension of an Information Collection (1028–0089), Mineral Resources Program's (MRP) Mineral Resource External Research Program (MRERP).

SUMMARY: To comply with the Paperwork Reduction Act of 1995 (PRA), we are notifying the public that we have submitted to the Office of Management and Budget (OMB) an information collection request (ICR) for renewal of the currently approved paperwork requirements for the Mineral Resources Program's (MRP) Mineral Resource External Research Program (MRERP). This notice provides the public and other Federal agencies an opportunity to comment on the paperwork burden of these project narrative and report requirements. This collection is scheduled to expire on August 31, 2012.

DATES: You must submit comments on or before August 27, 2012.

ADDRESSES: Please submit comments on this information collection directly to the Office of Management and Budget (OMB) Office of Information and Regulatory Affairs, Attention: Desk Officer for the Department of Interior via email [*OIRA_DOCKET@omb.eop.gov*]; or fax (202) 395–5806; and identify your submission as 1028–0089.

Please also submit a copy of your comments to the USGS Information Collection Clearance Officer, 12201 Sunrise Valley Drive, Mail Stop 807, Reston, VA 20192 (mail); 703–648–7199 (fax); or *smbaloch@usgs.gov* (email); and reference Information Collection 1028–0089 in the subject line.

FOR FURTHER INFORMATION CONTACT: To request additional information about this ICR, contact Jeff L. Doebrich by mail at U.S. Geological Survey, 913 National Center, Sunrise Valley Drive, Reston, VA 20192 or by telephone at 703–648–6103.

SUPPLEMENTARY INFORMATION:

Title: Mineral Resource External Research Program (MRERP).

OMB Control Number: 1028–0089.

Form Number: None.

Abstract: Through the MRERP, the MRP of the USGS offers an annual competitive grant and/or cooperative agreement opportunity to universities, State agencies, Tribal governments or organizations, and industry or other private sector organizations. Applicants must have the ability to conduct research in topics related to nonfuel mineral resources and that meet the goals of the MRP. The MRERP will consider all research-based proposals that address one of the long-term goals of the Mineral Resources Program, as

defined in the current USGS Energy and Minerals Science Strategy (*http://pubs.usgs.gov/of/2012/1072/of2012-1072.pdf*). These are: (1) Understand fundamental Earth processes forming mineral resources, (2) understand the environmental behavior of mineral resources and their waste products, (3) provide inventories and assessments of mineral resources, (4) understand the effects of mineral development on natural resources, and (5) understand the availability and reliability of mineral resource supplies. Furthermore, annual research priorities are provided as guidance for applicants to consider when submitting proposals. Annual research priorities are determined by USGS MRP management. Since its initiation in 2004, the MRERP has awarded more than $2.8 million to 48 different research projects across the country.

We will protect information from respondents considered proprietary under the Freedom of Information Act (5 U.S.C. 552) and implementing regulations (43 CFR Part 2), and under regulations at 30 CFR 250.197, ''Data and information to be made available to the public or for limited inspection.'' Responses are voluntary. No questions of a ''sensitive'' nature are asked. We intend to release the project abstracts and primary investigators for awarded/funded projects only.

Frequency: Annually.

Estimated Annual Number and Description of Respondents: Approximately 35 research scientists from universities, State agencies, Tribal governments or organizations, and industry or other private sector organizations.

Estimated Total Number of Annual Responses: 40.

Estimated Annual Burden Hours: 1580.

Estimated Annual Reporting and Recordkeeping ''Hour'' Burden: We expect to receive approximately 35 applications, each taking the applicant approximately 40 hours to complete. This includes the time for project conception and development, proposal writing and reviewing, and submitting proposal narrative through Grants.gov (totaling 1,400 burden hours). We anticipate awarding an average of 5 grants per year. The award recipients must submit a final technical report. We estimate that it will take approximately 36 hours to complete and submit each report (totaling 180 hours).

Estimated Reporting and Recordkeeping ''Non-Hour Cost'' Burden: There are no ''non-hour cost'' burdens associated with this collection of information.

Public Disclosure Statement: The PRA (44 U.S.C. 3501, *et seq.*) provides that an agency may not conduct or sponsor a collection of information unless it displays a currently valid OMB control number. Until OMB approves a collection of information, you are not obligated to respond.

Comments: To comply with the public consultation process, on April 27, 2012 we published a **Federal Register** notice (77 FR 25193) announcing our intent to submit this information collection to OMB for approval. In that notice we solicited public comments for 60 days, ending on June 26, 2012. We did not receive any public comments in response to the notice.

We again invite comments concerning this information collection on: (1) Whether or not the collection of information is necessary, including whether or not the information will have practical utility; (2) the accuracy of our estimate of the burden for this collection of information; (3) ways to enhance the quality, utility, and clarity of the information to be collected; and (4) ways to minimize the burden of the collection of information on respondents.

Please note that the comments submitted in response to this notice are a matter of public record. Before including your address, phone number, email address, or other personal identifying information in your comment, you should be aware that your entire comment, including your personal identifying information, may be made publicly available at any time. While you can ask OMB in your comment to withhold your personal identifying information from public review, we cannot guarantee that it will be done.

Dated: July 16, 2012.

Ione Taylor,

Associate Director, Energy and Minerals, and Environmental Health.

[FR Doc. 2012–18264 Filed 7–25–12; 8:45 am]

BILLING CODE 4311–AM–P

INTERNATIONAL TRADE COMMISSION

[Investigation Nos. 731–TA–1202–03 (Preliminary)]

Xanthan Gum From Austria and China

Determinations

On the basis of the record [1] developed in the subject investigations, the United States International Trade Commission (Commission) determines, pursuant to section 733(a) of the Tariff Act of 1930 (19 U.S.C. 1673b(a)) (the Act), that there is a reasonable indication that an industry in the United States is materially injured by reason of imports from Austria and China of xanthan gum, provided for in subheading 3913.90.20 of the Harmonized Tariff Schedule of the United States, that are alleged to be sold in the United States at less than fair value (LTFV).[2]

Pursuant to section 207.18 of the Commission's rules, the Commission also gives notice of the commencement of the final phase of its investigations. The Commission will issue a final phase notice of scheduling, which will be published in the **Federal Register** as provided in section 207.21 of the Commission's rules, upon notice from the Department of Commerce (Commerce) of affirmative preliminary determinations in the investigations under section 733(b) of the Act, or, if the preliminary determinations are negative, upon notice of affirmative final determinations in the investigations under section 735(a) of the Act. Parties that filed entries of appearance in the preliminary phase of the investigations need not enter a separate appearance for the final phase of the investigations. Industrial users, and, if the merchandise under investigation is sold at the retail level, representative consumer organizations have the right to appear as parties in Commission antidumping and countervailing duty investigations. The Secretary will prepare a public service list containing the names and addresses of all persons, or their representatives, who are parties to the investigations.

Background

On June 5, 2012, a petition was filed with the Commission and Commerce by CP Kelco U.S., Atlanta, GA, alleging that an industry in the United States is materially injured or threatened with material injury by reason of LTFV

[1] The record is defined in sec. 207.2(f) of the Commission's Rules of Practice and Procedure (19 CFR 207.2(f)).

[2] Commissioner Deanna Tanner Okun did not participate in these investigations.

imports of xanthan gum from Austria and China. Accordingly, effective June 5, 2012, the Commission instituted antidumping duty investigation Nos. 731–TA–1202–03 (Preliminary).

Notice of the institution of the Commission's investigations and of a public conference to be held in connection therewith was given by posting copies of the notice in the Office of the Secretary, U.S. International Trade Commission, Washington, DC, and by publishing the notice in the **Federal Register** of July 12, 2012 (77 FR 34997). The conference was held in Washington, DC, on June 26, 2012, and all persons who requested the opportunity were permitted to appear in person or by counsel.

The Commission transmitted its determinations in these investigations to the Secretary of Commerce on July 20, 2012. The views of the Commission are contained in USITC Publication 4342 (July 2012), entitled *Xanthan Gum from Austria and China: Investigation Nos. 731–TA–1202–03 (Preliminary).*

Issued: July 23, 2012.

By order of the Commission.

Lisa R. Barton,

Acting Secretary to the Commission.

[FR Doc. 2012–18271 Filed 7–25–12; 8:45 am]

BILLING CODE 7020–02–P

INTERNATIONAL TRADE COMMISSION

[Investigation No. 337–TA–703]

Certain Mobile Telephones and Wireless Communication Devices Featuring Digital Cameras, and Components Thereof; Determination To Review the Initial Remand Determination in Part and on Review To Affirm a Determination of No Violation of Section 337; Termination of the Investigation

AGENCY: U.S. International Trade Commission.

ACTION: Notice.

SUMMARY: Notice is hereby given that the U.S. International Trade Commission has determined to affirm, on modified grounds, the remand initial determination (''remand ID'') issued by the presiding administrative law judge (''ALJ'') on May 21, 2012, finding no violation of section 337 of the Tariff Act of 1930 (19 U.S.C. 1337), as amended, (''section 337'') in the above-captioned investigation. The investigation is thus terminated with a finding of no violation of section 337.

FOR FURTHER INFORMATION CONTACT: Amanda S. Pitcher, Office of the General Counsel, U.S. International Trade Commission, 500 E Street SW., Washington, DC 20436, telephone (202) 708–2532. Copies of non-confidential documents filed in connection with this investigation are or will be available for inspection during official business hours (8:45 a.m. to 5:15 p.m.) in the Office of the Secretary, U.S. International Trade Commission, 500 E Street SW., Washington, DC 20436, telephone (202) 205–2737. General information concerning the Commission may also be obtained by accessing its Internet server at *http://www.usitc.gov.* The public record for this investigation may be viewed on the Commission's electronic docket (EDIS) at *http://edis.usitc.gov.* Hearing-impaired persons are advised that information on this matter can be obtained by contacting the Commission's TDD terminal on (202) 205–1810.

SUPPLEMENTARY INFORMATION: This investigation was instituted on February 23, 2010, based upon a complaint filed on behalf of Eastman Kodak Company of Rochester, New York (''Kodak'') on January 14, 2010, and supplemented on February 4, 2010. 75 *FR* 8112. The complaint alleged violations of section 337 of the Tariff Act of 1930 in the importation into the United States, the sale for importation, and the sale within the United States after importation of certain mobile telephones and wireless communication devices featuring digital cameras, and components thereof, that infringe certain claims of U.S. Patent No. 6,292,218 (''the '218 patent''). The notice of investigation named as respondents Apple, Inc. of Cupertino, California (''Apple''); Research in Motion, Ltd. of Ontario, Canada; and Research in Motion Corp. of Irving, Texas (collectively, ''RIM''). Claim 15 is the only asserted claim remaining in the investigation.

On January 24, 2011, then-Chief Judge Luckern issued a final Initial Determination (''final ID'') finding no violation of section 337. On March 25, 2011, the Commission determined to review the final ID in its entirety. 76 FR 17,965 (March 31, 2011). On June 30, 2011, the Commission issued a notice that determined to affirm in part, reverse in part, and remand in part, the final ID. The Commission remanded the investigation in order for the ALJ to consider (1) infringement under the Commission's construction of the ''still processor'' limitation; (2) infringement under the Commission's construction of the ''motion processor'' limitation; (3) whether Kodak waived the argument that the iPhone 3GS and iPhone 4 in their non-flash-photography mode practice the ''initiating capture'' limitation under the doctrine of equivalents and if not, whether the iPhone 3GS and iPhone 4 practice this limitation under the doctrine of equivalents; and (4) validity in light of the Commission's claim constructions, including further analysis of the pertinence of the *ex parte* reexaminations of the '218 patent and an explanation of the secondary considerations of nonobviousness. After remand, Chief Judge Luckern retired, and the investigation was reassigned to Judge Pender.

On May 21, 2012, Judge Pender issued the remand ID finding no violation of section 337. In particular, he found claim 15 to be obvious in view of Japanese Patent Application Laid-Open Disclosure No. H5–122574 (''Mori'') and U.S. Patent No. 5,493,335 to Parulski (''Parulski '335''). He found the claim to be infringed by the accused RIM products and by the Apple iPhone 3G, but not the iPhone 3GS and iPhone 4. Kodak and the Commission investigative attorney (''IA'') petitioned for review of, *inter alia,* the ALJ's finding that claim 15 of the '218 patent is invalid. RIM has petitioned for review of the ALJ's finding of infringement by the accused RIM products, the ALJ's failure to consider certain newly introduced products that RIM contends do not infringe, and the ALJ's finding that claim 15 is not obvious in view of the combination of U.S. Patent No. 4,887,161 (Watanabe), U.S. Patent No. 3,971,065 (Bayer), and Sharp ViewCam. Apple petitioned for review of the ALJ's finding that the iPhone 3G infringes claim 15, and Apple joined in RIM's petition on the invalidity issues. The IA, Apple and RIM filed responses to Kodak's petition. The IA and Kodak filed responses to RIM's and Apple's petitions.

Having reviewed the record of this investigation, including the parties' petitions for review and responses thereto, as well as the parties' submissions to the ALJ, both before and after remand, and the transcripts of the hearing conducted by the ALJ, the Commission has determined to review the ALJ's remand ID in part. The Commission has determined to review the ALJ's finding of infringement of the '218 patent by the accused RIM products and the iPhone 3G, and his finding of invalidity based on the Mori and Parulski '335 combination. The Commission affirms the remaining findings of the ALJ. On review, the Commission has determined to (1) find that the accused RIM products and the Apple iPhone 3G infringe claim 15; and (2) affirm the ALJ's invalidity findings

regarding the Mori and Parulski '335 combination on modified grounds.

The Commission's determination and reasons in support thereof will be further detailed in the Commission's forthcoming opinion.

The authority for the Commission's determination is contained in section 337 of the Tariff Act of 1930, as amended (19 U.S.C. 1337), and in sections 210.42–46 of the Commission's Rules of Practice and Procedure (19 CFR 210.42–46).

Issued: July 20, 2012.

By order of the Commission.

Lisa R. Barton,

Acting Secretary to the Commission.

[FR Doc. 2012–18190 Filed 7–25–12; 8:45 am]

BILLING CODE 7020–02–P

DEPARTMENT OF JUSTICE

Notice of Lodging of Consent Decree Under the Comprehensive Environmental Response, Compensation, and Liability Act (CERCLA)

Notice is hereby given that on July, 13, 2012, a proposed Consent Decree in *United States* v. *Alcoa Inc., et al.,* Civil Action No. 3:12–cv–00210, was lodged with the United States District Court for the Southern District of Texas.

This action pertains to the ''Malone Services Company'' Superfund Site in Texas City, Texas. The Consent Decree requires a group of 27 companies to clean up the Site and pay EPA $900,000 towards past and future costs. The cleanup will cost $56.4 million according to an estimate by the United States Environmental Protection Agency (EPA). Seventy-six entities, including the United States and the Texas Commission on Environmental Quality (TCEQ), are resolving their liability in the Consent Decree by paying cash to the group of 27 companies that will carry out the cleanup. The United States, which shipped 1.62% of the waste, will pay $1,490,029. TCEQ, which shipped 0.00545% of the waste, will contribute $6,766. EPA previously completed four rounds of administrative settlements with approximately 230 ''de minimis'' generators of waste.

The settlement also addresses natural resources damages. Under the Consent Decree, the federal and state natural resource trustees for the Site will receive a total of $3,109,000 to implement environmental restoration projects. (This amount also covers some assessment, planning, and oversight costs.) The trustees are the National Oceanic and Atmospheric Administration, the U.S. Department of the Interior represented by the U.S. Fish and Wildlife Service, TCEQ, the Texas Parks and Wildlife Department, and the Texas General Land Office.

For a period of thirty (30) days from the date of this publication the Department of Justice will receive comments relating to the Consent Decree. Comments should be addressed to the Principal Deputy Assistant Attorney General, Environment and Natural Resources Division, and either emailed to *pubcomment-ees.enrd@usdoj.gov*, or mailed to P.O. Box 7611, U.S. Department of Justice, Washington, DC 20044–7611, and should refer to *United States* v. *Alcoa Inc., et al.,* D.J. Ref. No. 90–11–2–07465/4. Commenters may request an opportunity for a public meeting in the affected area, in accordance with Section 7003(d) of RCRA, 42 U.S.C. 6973(d).

During the public comment period, the Consent Decree may be examined on the following Department of Justice Web site: *http://www.usdoj.gov/enrd/Consent_Decrees.html.* A copy of the Consent Decree may also be obtained by mail from the Consent Decree Library, P.O. Box 7611, U.S. Department of Justice, Washington, DC 20044–7611, or by faxing or emailing a request to ''Consent Decree Copy'' EESCDCopy (*EESCDCopy.ENRD@usdoj.gov*), fax number (202) 514–0097, phone confirmation number (202) 514–5271. If requesting a full copy of the Consent Decree from the Consent Decree Library—including 105 pages of defendant signature pages and the 242-page Record of Decision for the Site (September 2009) — please enclose a check in the amount of $116.75 (25 cents per page reproduction cost) payable to the U.S. Treasury, or, if requesting by email or fax, please forward a check in that amount to the Consent Decree Library at the address given above. If requesting a copy of the proposed Consent Decree that includes neither the defendants' signature pages nor the appendix that is a copy of the Record of Decision for the Site, please enclose a check in the amount of $30.00 (25 cents per page reproduction cost) payable to the U.S. Treasury.

Maureen M. Katz,

Assistant Section Chief, Environmental Enforcement Section, Environment and Natural Resources Division.

[FR Doc. 2012–18191 Filed 7–25–12; 8:45 am]

BILLING CODE 4410–15–P

DEPARTMENT OF JUSTICE

Notice of Lodging of a Consent Decree Under the Clean Air Act

Notice is hereby given that on July 2, 2012, a proposed Consent Decree in the case of *United States* v. *Hercules Incorporated,* No. 3:12CV483, was lodged with the United States District Court for the Eastern District of Virginia, Richmond Division. In this action, the United States sought relief for violations of Section 112 of the Clean Air Act, 42 U.S.C. 7412, and implementing regulations at 40 CFR part 63, Subpart UUUU, the National Emission Standards for Hazardous Air Pollutants for Cellulose Products Manufacturing, and for violations of the Defendant's State-issued operating permit at its cellulose products manufacturing facility in Hopewell, Virginia. The proposed Consent Decree requires the Defendant to pay a civil penalty of $175,000, and to implement a program aimed at preventing future violations of the Clean Air Act at its Hopewell facility.

The Department of Justice will receive, for a period of thirty (30) days from the date of this publication, comments relating to the Consent Decree. Comments should be addressed to the Assistant Attorney General, Environment and Natural Resources Division, and either emailed to *pubcomment-ees.enrd@usdoj.gov,* or mailed to: P.O. Box 7611, U.S. Department of Justice, Washington, DC 20044–7611, and should refer to: *U.S.* v. *Hercules Incorporated.,* DJ. Ref. No. 90–5–2–1–09609.

During the public comment period, the Consent Decree may also be examined at the following Department of Justice Web site: *http://www.usdoj.gov/enrd/Consent_Decrees.html.* A copy of the Consent Decree may also be obtained by mail from the Consent Decree Library, P.O. Box 7611, U.S. Department of Justice, Washington, DC 20044–7611, or by faxing or emailing a request to ''Consent Decree Copy''(*EESCDCopy.ENRD@usdoj.gov*), fax no. (202) 514–0097, phone confirmation number (202) 514–5271. If requesting a copy from the Consent Decree Library by mail, please enclose a check in the amount of $16.50 (25 cents per page reproduction cost) payable to the U.S. Treasury or, if requesting by email or fax, forward a check in that amount to the Consent

Decree Library at the address given above.

Robert Brook,

Assistant Chief, Environmental Enforcement Section, Environment and Natural Resources Division.

[FR Doc. 2012–18286 Filed 7–25–12; 8:45 am]

BILLING CODE 4410–15–P

DEPARTMENT OF JUSTICE

Notice of Lodging of a Consent Decree Pursuant to the Clean Water Act

Notice is hereby given that a proposed Consent Decree in *United States of America and the State of Tennessee* v. *City of Chattanooga, Tennessee, Civ. No. 1:12–cv–00245,* was lodged on July 17, 2012 with the United States District Court for the Eastern District of Tennessee, Chattanooga Division.

The proposed Consent Decree would resolve certain claims under Sections 301, 309 and 402 of the Clean Water Act, 33 U.S.C. 1251, et seq., against the City of Chattanooga (''City'' or ''Chattanooga''), through the performance of injunctive measures, the payment of a civil penalty, and the performance of Supplemental Environmental Projects (''SEPs''). The United States and the State of Tennessee allege that the City is liable as a person who has discharged a pollutant from a point source to navigable waters of the United States without a permit and, in some cases, in excess of permit limitations.

The proposed Consent Decree would resolve the liability of Chattanooga for the violations alleged in the complaint filed in this matter. To resolve these claims, Chattanooga would perform the injunctive measures as described in the proposed Consent Decree. More specifically, the proposed consent decree will require Chattanooga to comprehensively assess and rehabilitate its entire sewer collection system to eliminate overflows of untreated raw sewage. Chattanooga will perform rehabilitation projects to address known problems within the collection system; implement programs to ensure proper management, operation and maintenance of its sewer systems; and install additional controls on the Chattanooga Creek combined sewer outfalls to ensure compliance with water quality standards.

In addition, Chattanooga would pay a civil penalty of $476,400. The penalty will be split evenly between the United States and the State. The City will pay $238,200 to the United States Treasury. At the direction of the state, the other half of the civil penalty will be paid by Chattanooga through the performance of green infrastructure demonstration projects. In addition, Chattanooga has agreed to perform a stream restoration supplemental environmental project at a cost of $800,000.

The Department of Justice will receive comments relating to the proposed Consent Decree for a period of thirty (30) days from the date of this publication. Comments should be addressed to the Assistant Attorney General, Environment and Natural Resources Division, and either emailed to *pubcomment-ees.enrd@usdoj.gov* or mailed to P.O. Box 7611, U.S. Department of Justice, Washington, DC 20044–7611 and should refer to United States of America and the State of Tennessee v. City of Chattanooga, DJ No. 90–5–1–1–10145.

The proposed Consent Decree may be examined at the Region 4 Office of the Environmental Protection Agency, Atlanta Federal Center, 61 Forsyth Street SW., Atlanta GA 30303. During the public comment period, the decree may also be examined on the following Department of Justice Web site, *http://www.usdoj.gov/enrd/Consent_Decrees.html.* A copy of the decree may also be obtained by mail from the Consent Decree Library, P.O. Box 7611, U.S. Department of Justice, Washington, DC 20044–7611, or by faxing or emailing a request to ''Consent Decree Copy'' (*EESCDCopy.enrd@usdoj.gov*), fax no. (202) 514–0097, phone confirmation number (202) 514–5271. In requesting a copy from the Consent Decree Library, please refer to United States of America and the State of Tennessee v. City of Chattanooga, (proposed Consent Decree, DOJ Ref. No. 90–5–1–1–10145), and enclose a check in the amount of $75.25 (25 cents per page reproduction cost) payable to the U.S. Treasury or, if by email or fax, forward a check in that amount to the Consent Decree Library at the stated address.

Henry S. Friedman,

Assistant Section Chief, Environmental Enforcement Section, Environment and Natural Resources Division.

[FR Doc. 2012–18267 Filed 7–25–12; 8:45 am]

BILLING CODE 4410–15–P

DEPARTMENT OF JUSTICE

Notice of Lodging of Consent Decree Pursuant to the Clean Water Act

In accordance with 28 CFR 50.7, 38 FR 19029, notice is hereby given that on July 2, 2012, a Consent Decree was lodged with the United States District Court for the District of Massachusetts in *United States* v. *Fairhaven Shipyard Companies, Inc.,* Civil Action No. 12–CV–11191–MBB. A complaint in the action was also filed simultaneously with the lodging of the Consent Decree. In the complaint the United States, on behalf of the U.S. Environmental Protection Agency (EPA), alleges that the defendant Fairhaven Shipyard Companies, Inc. (''Fairhaven Shipyard'') violated Sections 301, 311, and 402 of the Clean Water Act, 33 U.S.C. 1311, 1321, and 1342, applicable regulations relating to the discharge of process water and storm water, and applicable oil pollution prevention regulations, at Fairhaven Shipyard's two facilities at 50 Fort Street and 32 Water Street in Fairhaven, Massachusetts. The consent decree requires Fairhaven Shipyard to pay a civil penalty of $175,000 and undertake measures to achieve compliance with the above-referenced provisions of the Clean Water Act and applicable regulations at the two facilities.

For a period of thirty (30) days from the date of this publication, the United States Department of Justice will receive comments relating to the proposed Consent Decree. Comments should be addressed to the Assistant Attorney General for the Environment and Natural Resources Division, and should either be emailed to *pubcomment-ees.enrd@usdoj.gov* or mailed to P.O. Box 7611, Washington, DC 20044–7611. The comments should refer to *United States* v. *Fairhaven Shipyard Companies, Inc.,* D.J. Ref.# 90–5–1–1–10216.

During the public comment period, the proposed Consent Decree may be examined at the office of the United States Attorney, Suite 9200, 1 Courthouse Way, Boston, Massachusetts 02110, and at the Region I office of the Environmental Protection Agency, One Congress Street, Suite 1100, Boston, Massachusetts 02114. The proposed Consent Decree may also be obtained at the following Department of Justice Web site: *http://www.usdoj.gov/enrd/Consent_Decrees.html.* A copy may also be obtained by mail from the Department of Justice Consent Decree Library, P.O. Box 7611, Washington, DC 20044–7611 or by faxing or emailing a request to ''Consent Decree Copy'' (*EESCDCopy.enrd@usdoj.gov*), fax no. (202) 514–0097, phone confirmation number (202) 514–5271. If requesting a copy from the Consent Decree Library by mail, please enclose a check in the amount of $11.75 ($.25 per page) payable to the U.S. Treasury, or if be email or fax, forward a check in that

amount to the Consent Decree Library at the address given above.

Maureen Katz,

Assistant Chief, Environmental Enforcement Section, Environment & Natural Resources Division.

[FR Doc. 2012–18252 Filed 7–25–12; 8:45 am]

BILLING CODE 4410–15–P

DEPARTMENT OF JUSTICE

Drug Enforcement Administration

Importer of Controlled Substances; Notice Of Application; Cody Laboratories, Inc.

Pursuant to Title 21 Code of Federal Regulations 1301.34 (a), this is notice that on May 30, 2012, Cody Laboratories Inc., 601 Yellowstone Avenue, Cody, Wyoming 82414–9321, made application by renewal to the Drug Enforcement Administration (DEA) for registration as an importer of the following basic classes of controlled substances:

Drug	Schedule
Opium, Raw (9600)	II
Concentrate Poppy Straw (9670)	II
Tapentadol (9780)	II

The company plans to import narcotic raw materials for manufacturing and further distribution to its customers. The company is registered with DEA as a manufacturer of several controlled substances that are manufactured from opium, poppy straw, and poppy straw concentrate.

The company plans to import an intermediate form of Tapentadol (9780) to bulk manufacture Tapentadol for distribution to its customers.

Comments and requests for hearings on applications to import narcotic raw material are not appropriate. 72 FR 3417 (2007).

Any bulk manufacturer who is presently, or is applying to be, registered with DEA to manufacture such basic class of controlled substance listed in schedule II, which fall under the authority of section 1002(a)(2)(B) of the Act [21 U.S.C. 952(a)(2)(B)] may, in the circumstances set forth in 21 U.S.C. 958(i), file comments or objections to the issuance of the proposed registration and may, at the same time, file a written request for a hearing on such application pursuant to 21 CFR 1301.43 and in such form as prescribed by 21 CFR 1316.47.

Any such written comments or objections should be addressed, in quintuplicate, to the Drug Enforcement Administration, Office of Diversion Control, Federal Register Representative (ODL), 8701 Morrissette Drive, Springfield, Virginia 22152; and must be filed no later than August 27, 2012.

As noted in a previous notice published in the **Federal Register** on September 23, 1975, 40 FR 43745, all applicants for registration to import a basic class of any controlled substance in schedule I or II are, and will continue to be, required to demonstrate to the Deputy Assistant Administrator, Office of Diversion Control, Drug Enforcement Administration, that the requirements for such registration pursuant to 21 U.S.C. 958(a); 21 U.S.C. 823(a); and 21 CFR 1301.34(b), (c), (d), (e), and (f) are satisfied.

Dated: July 17, 2012.

Joseph T. Rannazzisi,

Deputy Assistant Administrator, Office of Diversion Control, Drug Enforcement Administration.

[FR Doc. 2012–18206 Filed 7–25–12; 8:45 am]

BILLING CODE 4410–09–P

DEPARTMENT OF JUSTICE

Drug Enforcement Administration

Importer of Controlled Substances; Notice of Application; Akorn, Inc.

Pursuant to Title 21 Code of Federal Regulations 1301.34(a), this is notice that on May 31, 2012, Akorn, Inc., 1222 W. Grand Avenue, Decatur, Illinois 62522, made application by renewal to the Drug Enforcement Administration (DEA) for registration as an importer of Remifentanil (9739), a basic class of controlled substance listed in schedule II.

The company plans to import Remifentanil in bulk for use in dosage-form manufacturing.

Any bulk manufacturer who is presently, or is applying to be, registered with DEA to manufacture such basic classes of controlled substances listed in schedules I or II, which fall under the authority of section 1002(a)(2)(B) of the Act [21 U.S.C. 952(a)(2)(B)] may, in the circumstances set forth in 21 U.S.C. 958(i), file comments or objections to the issuance of the proposed registration and may, at the same time, file a written request for a hearing on such application pursuant to 21 CFR 1301.43 and in such form as prescribed by 21 CFR 1316.47.

Any such written comments or objections should be addressed, in quintuplicate, to the Drug Enforcement Administration, Office of Diversion Control, Federal Register Representative (ODL), 8701 Morrissette Drive, Springfield, Virginia 22152; and must be filed no later than August 27, 2012.

This procedure is to be conducted simultaneously with, and independent of, the procedures described in 21 CFR 1301.34(b), (c), (d), (e), and (f). As noted in a previous notice published in the **Federal Register** on September 23, 1975, 40 FR 43745–46, all applicants for registration to import a basic class of any controlled substance in schedules I or II are, and will continue to be, required to demonstrate to the Deputy Assistant Administrator, Office of Diversion Control, Drug Enforcement Administration, that the requirements for such registration pursuant to 21 U.S.C. 958(a); 21 U.S.C. 823(a); and 21 CFR 1301.34(b), (c), (d), (e), and (f) are satisfied.

Dated: July 17, 2012.

Joseph T. Rannazzisi,

Deputy Assistant Administrator, Office of Diversion Control, Drug Enforcement Administration.

[FR Doc. 2012–18221 Filed 7–25–12; 8:45 am]

BILLING CODE 4410–09–P

DEPARTMENT OF JUSTICE

Drug Enforcement Administration

Importer of Controlled Substances; Notice of Application; Boehringer Ingelheim Chemicals

Pursuant to Title 21 Code of Federal Regulations 1301.34(a), this is notice that on June 8, 2012, Boehringer Ingelheim Chemicals, Inc., 2820 N. Normandy Drive, Petersburg, Virginia 23805, made application by renewal to the Drug Enforcement Administration (DEA) for registration as an importer of Phenylacetone (8501), a basic class of controlled substance listed in schedule II.

The company plans to import the listed controlled substance to bulk manufacture amphetamine.

Any bulk manufacturer who is presently, or is applying to be, registered with DEA to manufacture such basic class of controlled substance listed in schedule II, which falls under the authority of section 1002(a)(2)(B) of the Act (21 U.S.C. 952(a)(2)(B)) may, in the circumstances set forth in 21 U.S.C. 958(i), file comments or objections to the issuance of the proposed registration and may, at the same time, file a written request for a hearing on such application pursuant to 21 CFR 1301.43 and in such form as prescribed by 21 CFR 1316.47.

Any such written comments or objections should be addressed, in quintuplicate, to the Drug Enforcement

Administration, Office of Diversion Control, Federal Register Representative (ODL), 8701 Morrissette Drive, Springfield, Virginia 22152; and must be filed no later than August 27, 2012.

This procedure is to be conducted simultaneously with, and independent of, the procedures described in 21 CFR 1301.34(b), (c), (d), (e), and (f). As noted in a previous notice published in the **Federal Register** on September 23, 1975, 40 FR 43745–46, all applicants for registration to import a basic class of any controlled substances in schedule I or II are, and will continue to be, required to demonstrate to the Deputy Assistant Administrator, Office of Diversion Control, Drug Enforcement Administration, that the requirements for such registration pursuant to 21 U.S.C. 958(a); 21 U.S.C. 823(a); and 21 CFR 1301.34(b), (c), (d), (e), and (f) are satisfied.

Dated: July 17, 2012.

Joseph T. Rannazzisi,

Deputy Assistant Administrator, Office of Diversion Control, Drug Enforcement Administration.

[FR Doc. 2012–18213 Filed 7–25–12; 8:45 am]

BILLING CODE 4410–09–P

DEPARTMENT OF JUSTICE

Drug Enforcement Administration

Importer of Controlled Substances; Notice of Registration; Alltech Associates, Inc.

By Notice dated May 15, 2012, and published in the **Federal Register** on May 25, 2012, 77 FR 31387, Alltech Associates, Inc., 2051 Waukegan Road Deerfield, Illinois 60015, made application by renewal to the Drug Enforcement Administration (DEA) to be registered as an importer of the following basic classes of controlled substances:

Drug	Schedule
Gamma Hydroxybutyric Acid (2010).	I
Lysergic acid diethylamide (7315)	I
Heroin (9200)	I
Cocaine (9041)	II
Codeine (9050)	II
Hydrocodone (9193)	II
Meperidine (9230)	II
Methadone (9250)	II
Morphine (9300)	II

The company plans to import these controlled substances for the manufacture of reference standards.

No comments or objections have been received. DEA has considered the factors in 21 U.S.C. 823(a) and 952(a) and determined that the registration of Alltech Associates, Inc. to import the basic classes of controlled substances is consistent with the public interest and with United States obligations under international treaties, conventions, or protocols in effect on May 1, 1971. DEA has investigated Alltech Associates, Inc. to ensure that the company's registration is consistent with the public interest.

The investigation has included inspection and testing of the company's physical security systems, verification of the company's compliance with state and local laws, and a review of the company's background and history. Therefore, pursuant to 21 U.S.C. 952(a) and 958(a), and in accordance with 21 CFR 1301.34, the above named company is granted registration as an importer of the basic classes of controlled substances listed.

Dated: July 17, 2012.

Joseph T. Rannazzisi,

Deputy Assistant Administrator, Office of Diversion Control, Drug Enforcement Administration.

[FR Doc. 2012–18220 Filed 7–25–12; 8:45 am]

BILLING CODE 4410–09–P

DEPARTMENT OF JUSTICE

Drug Enforcement Administration

Importer of Controlled Substances; Notice of Registration; Noramco, Inc.

By Notice dated May 15, 2012, and published in the **Federal Register** on May 25, 2012, 77 FR 31388, Noramco, Inc., 500 Swedes Landing Road, Wilmington, Delaware 19801–4417, made application by renewal to the Drug Enforcement Administration (DEA) to be registered as an importer of the basic classes of controlled substances:

Drug	Schedule
Phenylacetone (8501)	II
Opium, raw (9600)	II
Poppy Straw Concentrate (9670)	II
Tapentadol (9780)	II

The company plans to import the Opium (9600) and Poppy Straw Concentrate (9670) to manufacture other controlled substances. The company plans to import Tapentadol (9780) in the intermediate form for the bulk manufacture of Tapentadol, which it will distribute to its customers. The company plans to import the Phenylacetone (8501) in bulk for the manufacture of a controlled substance.

Comments and requests for hearings on applications to import narcotic raw material are not appropriate. 72 FR 3417 (2007).

DEA has considered the factors in 21 U.S.C. 823(a) and 952(a), and determined that the registration of Noramco Inc. to import the basic classes of controlled substances is consistent with the public interest, and with United States obligations under international treaties, conventions, or protocols in effect on May 1, 1971, at this time. DEA has investigated Noramco, Inc. to ensure that the company's registration is consistent with the public interest. The investigation has included inspection and testing of the company's physical security systems, verification of the company's compliance with state and local laws, and a review of the company's background and history. Therefore, pursuant to 21 U.S.C. 952(a) and 958(a), and in accordance with 21 CFR 1301.34, the above named company is granted registration as an importer of the basic classes of controlled substances listed.

Dated: July 17, 2012.

Joseph T. Rannazzisi,

Deputy Assistant Administrator, Office of Diversion Control, Drug Enforcement Administration.

[FR Doc. 2012–18210 Filed 7–25–12; 8:45 am]

BILLING CODE 4410–09–P

DEPARTMENT OF JUSTICE

Drug Enforcement Administration

Manufacturer of Controlled Substances, Notice of Application, Nektar Therapeutics

Pursuant to § 1301.33(a), Title 21 of the Code of Federal Regulations (CFR), this is notice that on March 26, 2012, Nektar Therapeutics, 1112 Church Street, Huntsville, Alabama 35801, made application by letter to the Drug Enforcement Administration (DEA) to be registered as a bulk manufacturer of Fentanyl (9801), a basic class of controlled substance listed in schedule II.

The company plans to manufacture the listed controlled substance in support of product development.

Any other such applicant, and any person who is presently registered with DEA to manufacture such substances, may file comments or objections to the issuance of the proposed registration pursuant to 21 CFR 1301.33(a).

Any such written comments or objections should be addressed, in quintuplicate, to the Drug Enforcement Administration, Office of Diversion Control, **Federal Register** Representative

(ODL), 8701 Morrissette Drive, Springfield, Virginia 22152; and must be filed no later than September 24, 2012.

Dated: July 17, 2012.

Joseph T. Rannazzisi,

Deputy Assistant Administrator, Office of Diversion Control, Drug Enforcement Administration.

[FR Doc. 2012–18203 Filed 7–25–12; 8:45 am]

BILLING CODE 4410–09–P

DEPARTMENT OF JUSTICE

Drug Enforcement Administration

Manufacturer of Controlled Substances; Notice of Application; Cambrex Charles City, Inc.

Pursuant to § 1301.33(a), Title 21 of the Code of Federal Regulations (CFR), this is notice that on May 4, 2012, Cambrex Charles City, Inc., 1205 11th Street, Charles City, Iowa 50616, made application by renewal to the Drug Enforcement Administration (DEA) to be registered as a bulk manufacturer of the following basic classes of controlled substances:

Drug	Schedule
Gamma Hydroxybutyric Acid (2010).	I
Amphetamine (1100)	II
Lisdexamfetamine (1205)	II
Methylphenidate (1724)	II
4-Anilino-N-phenethyl-4-piperidine (ANPP)(8333).	II
Phenylacetone (8501)	II
Cocaine (9041)	II
Codeine (9050)	II
Oxycodone (9143)	II
Hydromorphone (9150)	II
Hydrocodone (9193)	II
Methadone (9250)	II
Dextropropoxyphene, bulk (non-dosage forms) (9273).	II
Morphine (9300)	II
Oripavine (9330)	II
Thebaine (9333)	II
Opium, raw (9600)	II
Opium extracts (9610)	II
Opium fluid extract (9620)	II
Opium tincture (9630)	II
Opium, powdered (9639)	II
Opium, granulated (9640)	II
Oxymorphone (9652)	II
Noroxymorphone (9668)	II
Poppy Straw Concentrate (9670)	II
Alfentanil (9737)	II
Remifentanil (9739)	II
Sufentanil (9740)	II
Fentanyl (9801)	II

The company plans to manufacture the listed controlled substances in bulk for sale to its customers, for dosage form development, for clinical trials, and for use in stability qualification studies.

Any other such applicant, and any person who is presently registered with DEA to manufacture such substances, may file comments or objections to the issuance of the proposed registration pursuant to 21 CFR 1301.33(a).

Any such written comments or objections should be addressed, in quintuplicate, to the Drug Enforcement Administration, Office of Diversion Control, Federal Register Representative (ODL), 8701 Morrissette Drive, Springfield, Virginia 22152; and must be filed no later than September 24, 2012.

Dated: July 17, 2012.

Joseph T. Rannazzisi,

Deputy Assistant Administrator, Office of Diversion Control, Drug Enforcement Administration.

[FR Doc. 2012–18212 Filed 7–25–12; 8:45 am]

BILLING CODE 4410–09–P

DEPARTMENT OF JUSTICE

Drug Enforcement Administration

Manufacturer of Controlled Substances; Notice of Application; Boehringer Ingelheim Chemicals Inc.

Pursuant to § 1301.33(a), Title 21 of the Code of Federal Regulations (CFR), this is notice that on June 8, 2012, Boehringer Ingelheim Chemicals Inc., 2820 N. Normandy Drive, Petersburg, Virginia 23805–9372, made application by renewal to the Drug Enforcement Administration (DEA) to be registered as a bulk manufacturer of the following basic classes of controlled substances:

Drug	Schedule
Amphetamine (1100)	II
Lisdexamfetamine (1205)	II
Methylphenidate (1724)	II
Methadone (9250)	II
Methadone Intermediate (9254)	II
Tapentadol (9780)	II

The company plans to manufacture the listed controlled substances in bulk for sale to its customers for formulation into finished pharmaceuticals. In reference to Methadone Intermediate (9254) the company plans to produce Methadone HCL active pharmaceutical ingredients (APIs) for sale to its customers.

Any other such applicant, and any person who is presently registered with DEA to manufacture such substances, may file comments or objections to the issuance of the proposed registration pursuant to 21 CFR 1301.33(a).

Any such written comments or objections should be addressed, in quintuplicate, to the Drug Enforcement Administration, Office of Diversion Control, **Federal Register** Representative (ODL), 8701 Morrissette Drive, Springfield, Virginia 22152; and must be filed no later than September 24, 2012.

Dated: July 17, 2012.

Joseph T. Rannazzisi,

Deputy Assistant Administrator, Office of Diversion Control, Drug Enforcement Administration

[FR Doc. 2012–18202 Filed 7–25–12; 8:45 am]

BILLING CODE 4410–09–P

DEPARTMENT OF JUSTICE

Drug Enforcement Administration

Manufacturer of Controlled Substances; Notice of Registration, Cambrex Charles City, Inc.

By Notice dated April 17, 2012 and published in the **Federal Register** on April 26, 2012, 77 FR 24986, Cambrex Charles City, Inc., 1205 11th Street, Charles City, Iowa 50616, made application by letter to the Drug Enforcement Administration (DEA) to be registered as a bulk manufacturer of the following basic classes of controlled substances:

Drug	Schedule
Hydrocodone (9193)	II
Methadone (9250)	II

The company plans to manufacture the listed controlled substances in bulk for sale to its customers.

No comments or objections have been received. DEA has considered the factors in 21 U.S.C. 823(a), and determined that the registration of Cambrex Charles City, Inc. to manufacture the listed basic classes of controlled substances is consistent with the public interest at this time. DEA has investigated Cambrex Charles City, Inc. to ensure that the company's registration is consistent with the public interest. The investigation has included inspection and testing of the company's physical security systems, verification of the company's compliance with state and local laws, and a review of the company's background and history.

Therefore, pursuant to 21 U.S.C. 823(a), and in accordance with 21 CFR 1301.33, the above named company is granted registration as a bulk manufacturer of the basic classes of controlled substances listed.

Dated: July 17, 2012.

Joseph T. Rannazzisi,

Deputy Assistant Administrator, Office of Diversion Control, Drug Enforcement Administration.

[FR Doc. 2012–18209 Filed 7–25–12; 8:45 am]

BILLING CODE 4410–09–P

DEPARTMENT OF JUSTICE

Drug Enforcement Administration

Manufacturer of Controlled Substances; Notice of Registration; Rhodes Technologies

By Notice dated April 17, 2012, and published in the **Federal Register** on April 26, 2012, 77 FR 24986, Rhodes Technologies, 498 Washington Street, Coventry, Rhode Island 02816, made application by renewal to the Drug Enforcement Administration (DEA) to be registered as a bulk manufacturer of the basic classes of controlled substances:

Drug	Schedule
Tetrahydrocannabinols (7370)	I
Methylphenidate (1724)	II
Codeine (9050)	II
Dihydrocodeine (9120)	II
Oxycodone (9143)	II
Hydromorphone (9150)	II
Hydrocodone (9193)	II
Oripavine (9330)	II
Thebaine (9333)	II
Oxymorphone (9652)	II
Noroxymorphone (9668)	II
Fentanyl (9801)	II

The company plans to manufacture the listed controlled substances in bulk for conversion and sale to dosage form manufacturers.

No comments or objections have been received. DEA has considered the factors in 21 U.S.C. 823(a) and determined that the registration of Rhodes Technologies to manufacture the listed basic classes of controlled substances is consistent with the public interest at this time. DEA has investigated Rhodes Technologies to ensure that the company's registration is consistent with the public interest. The investigation has included inspection and testing of the company's physical security systems, verification of the company's compliance with state and local laws, and a review of the company's background and history.

Therefore, pursuant to 21 U.S.C. 823(a), and in accordance with 21 CFR 1301.33, the above named company is granted registration as a bulk manufacturer of the basic classes of controlled substances listed.

Dated: July 17, 2012.

Joseph T. Rannazzisi,

Deputy Assistant Administrator, Office of Diversion Control, Drug Enforcement Administration.

[FR Doc. 2012–18207 Filed 7–25–12; 8:45 am]

BILLING CODE 4410–09–P

DEPARTMENT OF JUSTICE

National Institute of Corrections

Solicitation for a Cooperative Agreement—Development of a 21st Century Corrections Learning Professional Competency Model

AGENCY: National Institute of Corrections, U.S. Department of Justice.

ACTION: Solicitation for a Cooperative Agreement.

SUMMARY: The National Institute of Corrections (NIC) is soliciting proposals from organizations, groups, or individuals to enter into a cooperative agreement in a twelve (12) month project period for the development of a Corrections Learning Professional Competency Model. This project will identify the workplace learning competencies needed by correctional learning/training professionals at different organizational levels. It will define the competency, identify the relevant knowledge needed for its development, describe behaviors that are reflective of the competency, identify the skills required to use and develop the competency and suggest training strategies appropriate to the competency. The competency model will provide the foundation and focus, in conjunction with the NIC Learning and Performance White Paper (to be completed October, 2012), and the knowledge, skills, behaviors, responsibilities, and tasks needed for the future development and delivery of corrections learning work within the NIC Academy and the field of corrections. It will also provide a model for learning professionals in the field of corrections.

DATES: Applications must be received by 4:00 p.m. on Thursday, August 9, 2012.

ADDRESSES: Applicants will be encouraged to submit their proposals electronically via *http://www.grants.gov.* Applications may also be sent to: Director, National Institute of Corrections, 320 First Street NW., Room 5002, Washington, DC 20534. Applicants submitting proposals non-electronically should provide three unbound copies of all documents and are encouraged to use Federal Express, UPS, or similar service to ensure delivery by the due date. Faxed applications will not be accepted.

FOR FURTHER INFORMATION CONTACT: All technical or programmatic questions concerning this announcement should be directed to Bernie Iszler, Correctional Program Specialist, National Institute of Corrections. She can be reached by calling 303–338–6618 or by email at *biszler@bop.gov.*

SUPPLEMENTARY INFORMATION:

Background: NIC has prioritized building training capacity in corrections agencies for decades. Historically the NIC Academy's work has included development of multiple curricula for corrections trainers and training administrators based on the field's needs, development of new technologies and the latest workplace learning research.

As NIC envisions its work with corrections learning professionals in this century, we foresee multiple challenges that need to be addressed and explored including: A shift in roles from training director to learning and performance manager, from trainer to learning facilitator, a shift from only classroom content delivery to delivery in electronic platforms including synchronous and asynchronous sessions, a shift from training as an event to learning as a process including the creation of learning opportunities on a continuum from readiness preparation to on-demand just-in-time availability to coaching in the workplace. These shifts call for the development of a new competency model that places the learning professional in a position to enhance the performance of their agency. (reference: ASTD Competency Study: Mapping the Future)

Scope of Work: Tasks to be performed under this cooperative agreement include: (1) Identify the competencies needed by correctional learning leaders, training administrators, trainers, facilitators, adjunct trainers, subject matter experts and other levels of responsibility and job descriptions; (2) develop a profile for different levels of correctional learning professionals; (3) determine, list, and justify which competencies are most critical to each level; (4) identify a knowledge base and/or relevant theories required by the learning professional to use and develop the core competencies; (5) identify the skills required to use and develop the competencies at each level; (6) identify behaviors that reflect the core competencies at each level; and (7) provide tools with which NIC and correctional learning professionals in the field can use to revise and develop programs with appropriate combination of theoretical and skill-based content. Deliverables will include: (1) A brief narrative review of the project; (2) Learning professional profiles at different levels of responsibility and job descriptions; (3) A narrative describing existing workplace learning professional competencies; and (4) The Corrections

Learning Professional Competency Model format in the form of a matrix containing the name of each competency, and a definition and description of each competency. While this solicitation for a cooperative agreement has presented an outline for this project, this cooperative agreement welcomes innovative ideas regarding the process and final competency model product.

Specific Requirements: Documents or other media that are produced under this award must follow these guidelines: Prior to the preparation of the final draft of any document or other media, the awardee must consult with NIC's Writer/Editor concerning the acceptable formats for manuscript submissions and the technical specifications for electronic media. For all awards in which a document will be a deliverable, the awardee must follow the guidelines listed herein, as well as follow the Guidelines for Preparing and Submitting Manuscripts for Publication as found in the ''General Guidelines for Cooperative Agreements,'' which can be found on our Web site at *www.nicic.gov/cooperativeagreements.*

All final documents and other media submitted for posting on the NIC Web site must meet the federal government's requirement for accessibility (508 PDF or HTML file). The awardee must provide descriptive text interpreting all graphics, photos, graphs, and/or multimedia to be included with or distributed alongside the materials and must provide transcripts for all applicable audio/visual works.

Application Requirements: Applications should be concisely written, typed double spaced and reference the project by the ''NIC Opportunity Number'' and Title in this announcement. The package must include: A cover letter that identifies the audit agency responsible for the applicant's financial accounts as well as the audit period or fiscal year that the applicant operates under (e.g., July 1 through June 30); a program narrative not to exceed 20 pages, in response to the statement of work and a budget narrative explaining projected costs. Applicants may submit a description of the project teams' qualifications and expertise relevant to the project, but should not attach lengthy resumes. Large attachments to the proposal describing the organization or examples of other past work are discouraged. The following forms must also be included: OMB Standard Form 424, Application for Federal Assistance; OMB Standard Form 424A, Budget information—Non-Construction Programs; OMB Standard Form 424B, Assurances—Non-Construction Programs (these forms are available at *http://www.grants.gov*) and DOJ/NIC Certification Regarding Lobbying; Debarment, Suspension and Other Responsibility Matters; and the Drug-Free Workplace Requirements (available at *http://nicic.gov/Downloads/General/certif-frm.pdf.*

Applications may be submitted in hard copy, or electronically via *http://www.grants.gov.* If submitted in hard copy, there needs to be an original and three copies of the full proposal (program and budget narratives, application forms and assurances). The original should have the applicant's signature in blue ink.

Authority: Public Law 93–415.

Funds Available: NIC is seeking the applicant's best ideas regarding accomplishment of the scope of work and the related costs for achieving the goals of this solicitation. Funds may only be used for the activities that are linked to the desired outcome of the project.

Eligibility of Applicants: An eligible applicant is any public or private agency, educational institution, organization, individual or team with expertise in the described areas.

Review Considerations: Applications received under this announcement will be subject to the NIC Review Process. The criteria for the evaluation of each application will be as follows:

Programmatic (40%)

Are all of the seven project tasks adequately discussed? Is there a clear statement of how each task will be accomplished, to include: Major sub-tasks, the strategies to be employed, required staffing, and other required resources? Are there any innovative approaches, techniques, or design aspects proposed that will enhance the project?

Organizational (35%)

Does the proposed project staff possess the skills, knowledge, and expertise necessary to complete the tasks listed under the scope of work? Does the applicant organization, group, or individual have the organizational capacity to achieve all seven project tasks? Are the proposed project management and staffing plans realistic and sufficient to complete the project within the project time frame?

Project Management/Administration (25%)

Does the applicant identify reasonable objectives, milestones, and measures to track progress? If consultants and/or partnerships are proposed, is there a reasonable justification for their inclusion in the project, and a clear structure to insure effective coordination? Is the proposed budget realistic, provide sufficient cost detail/narrative, and represent good value relative to the anticipated results?

Note: NIC will NOT award a cooperative agreement to an applicant who does not have a Dun and Bradstreet Database Universal Number (DUNS) and is not registered in the Central Contractor Registry (CCR).

A DUNS number can be received at no cost by calling the dedicated toll-free DUNS number request line at 1–800–333–0505 (if you are a sole proprietor, you would dial 1–866–705–5711 and select option 1).

Registration in the CRR can be done online at the CCR Web site: *http://www.bpn.gov/ccr.* A CCR Handbook and worksheet can also be reviewed at the Web site.

Number of Awards: One.

NIC Opportunity Number: 12AC16. This number should appear as a reference line in the cover letter, where indicated on Standard Form 424, and outside of the envelope in which the application is sent.

Catalog of Federal Domestic Assistance Number: 16.601.

Executive Order 12372: This project is not subject to the provisions of Executive Order 12372.

James Cosby,

Acting Director, National Institute of Corrections.

[FR Doc. 2012–18225 Filed 7–25–12; 8:45 am]

BILLING CODE 4410–36–P

MARINE MAMMAL COMMISSION

Sunshine Act Meeting

TIME AND DATE: The Marine Mammal Commission will meet in open session on Tuesday, 7 August 2012, from 9:00 a.m. to 5:00 p.m.

PLACE: Clark Conference Room, Northeast Fisheries Science Center, 166 Water Street, Woods Hole, Massachusetts 02543, telephone (508) 495–2000.

STATUS: The Commission expects that all portions of the meeting will be open to the public. It will allow public participation as time permits and as determined to be desirable by the Chairman. Should it be determined that it is appropriate to close a portion of the meeting to the public, any such closure will be carried out in accordance with applicable regulations (50 CFR 560.5 and 560.6).

Seating for members of the public may be limited. The Commission therefore asks that those intending to attend the meeting advise it in advance by sending an email to the Commission at *mmc@mmc.gov* or by calling (301) 504–0087. Members of the public will need to present valid, government-issued photo identification and obtain a visitor's pass from the receptionist at the main laboratory building.

MATTERS TO BE CONSIDERED: The Commission plans to meet with regional management and scientific officials in each of the National Marine Fisheries Service's six regions to identify the most pressing marine mammal research and management needs. The Commission will use these meetings to develop a set of national priorities for guiding federal conservation efforts for marine mammals. Members of the public are invited to attend these meetings and to provide comments concerning priority issues. Those unable to attend any of the meetings may submit comments in writing. Written comments should be sent to Timothy J. Ragen, Executive Director, Marine Mammal Commission, 4340 East-West Highway, Room 700, Bethesda, Maryland 20814.

The first meeting will be held in the National Marine Fisheries Service's Northeast Region at the Northeast Fisheries Science Center. Notices of other meetings will be published in the **Federal Register** and posted on the Commission's Web site (*http://www.mmc.gov*) when the dates and locations are determined.

CONTACT PERSON FOR MORE INFORMATION: Timothy J. Ragen, Executive Director, Marine Mammal Commission, 4340 East-West Highway, Room 700, Bethesda, MD 20814; (301) 504–0087; email: *tragen@mmc.gov*.

Dated: July 19, 2012.

Michael L. Gosliner,

General Counsel.

[FR Doc. 2012–18318 Filed 7–24–12; 11:15 am]

BILLING CODE 6820–31–P

NATIONAL AERONAUTICS AND SPACE ADMINISTRATION

[Notice 12–043]

Notice of Intent To Grant Exclusive License

AGENCY: National Aeronautics and Space Administration.

ACTION: Notice of intent to grant exclusive license.

SUMMARY: This notice is issued in accordance with 35 U.S.C. 209(e) and 37 CFR 404.7(a)(1)(i). NASA hereby gives notice of its intent to grant an exclusive, license in the United States to practice the invention described and claimed in U.S. Patent Application No. 6,452,510; NASA Case No. KSC–12168 entitled ''Personal Cabin Pressure Monitor and Warning System,'' to Aviation Technology, Inc., having its principal place of business at 288 Dolphin Cove Court, Del Mar, CA 92014. The patent rights in this invention have been assigned to the United States of America as represented by the Administrator of the National Aeronautics and Space Administration. The prospective exclusive license will comply with the terms and conditions of 35 U.S.C. 209 and 37 CFR 404.7.

DATES: The prospective exclusive license may be granted unless, within fifteen (15) days from the date of this published notice, NASA receives written objections including evidence and argument that establish that the grant of the license would not be consistent with the requirements of 35 U.S.C. 209 and 37 CFR 404.7. Competing applications completed and received by NASA within fifteen (15) days of the date of this published notice will also be treated as objections to the grant of the contemplated exclusive license. Objections submitted in response to this notice will not be made available to the public for inspection and, to the extent permitted by law, will not be released under the Freedom of Information Act, 5 U.S.C. 552.

ADDRESSES: Objections relating to the prospective license may be submitted to Patent Counsel, Office of the Chief Counsel, Mail Code CC–A, NASA John F. Kennedy Space Center, Kennedy Space Center, FL 32899. Telephone: 321–867–7214; Facsimile: 321–867–1817.

FOR FURTHER INFORMATION CONTACT: Randall M. Heald, Patent Counsel, Office of the Chief Counsel, Mail Code CC–A, NASA John F. Kennedy Space Center, Kennedy Space Center, FL 32899. Telephone: 321–867–7214; Facsimile: 321–867–1817. Information about other NASA inventions available for licensing can be found online at *http://technology.nasa.gov/*.

Sumara M. Thompson-King,

Acting Deputy General Counsel.

[FR Doc. 2012–18227 Filed 7–25–12; 8:45 am]

BILLING CODE 7510–13–P

NATIONAL AERONAUTICS AND SPACE ADMINISTRATION

[Notice 12–042]

Notice of Intent To Grant a Partially Exclusive License

AGENCY: National Aeronautics and Space Administration.

ACTION: Notice of intent to grant partially exclusive license.

SUMMARY: This notice is issued in accordance with 35 U.S.C. 209(e) and 37 CFR 404.7(a)(1)(i). NASA hereby gives notice of its intent to grant a partially exclusive license in the United States to practice the inventions described and claimed in U.S. Patent Application No. 11/671,089 entitled ''Wireless Sensing System Using Open-Circuit, Electrically-Conductive Spiral-Trace Sensor,'' to Caplan Taylor Enterprises LLC having its principal place of business in Newport News, Virginia. The license may be limited to one or more fields of use. The patent rights in these inventions have been assigned to the United States of America as represented by the Administrator of the National Aeronautics and Space Administration. The prospective partially exclusive license will comply with the terms and conditions of 35 U.S.C. 209 and 37 CFR 404.7.

DATES: The prospective partially exclusive license may be granted unless, within fifteen (15) days from the date of this published notice, NASA receives written objections including evidence and argument that establish that the grant of the license would not be consistent with the requirements of 35 U.S.C. 209 and 37 CFR 404.7. Competing applications completed and received by NASA within fifteen (15) days of the date of this published notice will also be treated as objections to the grant of the contemplated partially exclusive license.

Objections submitted in response to this notice will not be made available to the public for inspection and, to the extent permitted by law, will not be released under the Freedom of Information Act, 5 U.S.C. 552.

ADDRESSES: Objections relating to the prospective license may be submitted to Patent Counsel, Office of Chief Counsel, NASA Langley Research Center, MS 30, Hampton, VA 23681; (757) 864–3230 (phone), (757) 864–9190 (fax).

FOR FURTHER INFORMATION CONTACT: Robin W. Edwards, Patent Counsel, Office of Chief Counsel, NASA Langley Research Center, MS 30, Hampton, VA 23681; (757) 864–3230; Fax: (757) 864–9190. Information about other NASA

inventions available for licensing can be found online at *http://technology.nasa.gov*.

Sumara M. Thompson-King,

Acting Deputy General Counsel.

[FR Doc. 2012–18228 Filed 7–25–12; 8:45 am]

BILLING CODE 7510–13–P

NATIONAL AERONAUTICS AND SPACE ADMINISTRATION

[Notice 12–058]

Notice of Intent To Grant Partially Exclusive License

AGENCY: National Aeronautics and Space Administration.

ACTION: Notice of intent to grant partially exclusive license

SUMMARY: This notice is issued in accordance with 35 U.S.C. 209(e) and 37 CFR 404.7(a)(1)(i). NASA hereby gives notice of its intent to grant a partially exclusive license in the United States to practice the invention described and claimed in U.S. Patent Nos. 7,295,884 entitled, ''System and Method of Designing a Load Bearing Layer of an Inflatable Vessel,'' to OxyHeal Medical Systems, Inc., having its principal place of business at 3224 Hoover Ave. National City, CA 91950. The patent rights in these inventions have been assigned to the United States of America as represented by the Administrator of the National Aeronautics and Space Administration. The prospective partially exclusive license will comply with the terms and conditions of 35 U.S.C. 209 and 37 CFR 404.7.

DATES: The prospective partially exclusive license may be granted unless, within fifteen (15) days from the date of this published notice, NASA receives written objections including evidence and argument that establish that the grant of the license would not be consistent with the requirements of 35 U.S.C. 209 and 37 CFR 404.7. Competing applications completed and received by NASA within fifteen (15) days of the date of this published notice will also be treated as objections to the grant of the contemplated partially exclusive license.

Objections submitted in response to this notice will not be made available to the public for inspection and, to the extent permitted by law, will not be released under the Freedom of Information Act, 5 U.S.C. 552.

ADDRESSES: Objections relating to the prospective license may be submitted to Patent Counsel, Office of the Chief Counsel, NASA Johnson Space Center, 2101 NASA Parkway, Houston, TX 77058, Mail Code AL; Phone (281) 483–3021; Fax (281) 483–6936.

FOR FURTHER INFORMATION CONTACT: Ted Ro, Intellectual Property Attorney, Office of Chief Counsel, NASA Johnson Space Center, 2101 NASA Parkway, Houston, TX 77058, Mail Code AL; Phone (281)244–7148; Fax (281) 483–6936. Information about other NASA inventions available for licensing can be found online at *http://technology.nasa.gov/.*

Sumara M. Thompson-King,

Acting Deputy General Counsel.

[FR Doc. 2012–18229 Filed 7–25–12; 8:45 am]

BILLING CODE 7510–13–P

POSTAL REGULATORY COMMISSION

[Docket No. CP2009–43; Order No. 1410]

Negotiated Service Agreement Amendment

AGENCY: Postal Regulatory Commission.

ACTION: Notice.

SUMMARY: The Commission is noticing a recently-filed Postal Service request concerning a change in the termination date of Express Mail & Priority Mail Contract 7. This notice addresses procedural steps associated with the filing.

DATES: *Comments are due:* July 27, 2012.

ADDRESSES: Submit comments electronically via the Commission's Filing Online system at *http://www.prc.gov.* Commenters who cannot submit their views electronically should contact the person identified in **FOR FURTHER INFORMATION CONTACT** by telephone for advice on alternatives to electronic filing.

FOR FURTHER INFORMATION CONTACT: Stephen L. Sharfman, General Counsel at 202–789–6820.

SUPPLEMENTARY INFORMATION:

Table of Contents

I. Introduction
II. Notice of Filings
III. Ordering Paragraphs

I. Introduction

On July 19, 2012, the Postal Service filed notice that it has agreed to an amendment to the existing Express Mail & Priority Mail Contract 7 subject to this docket.[1] The Postal Service includes three attachments in support of its Notice:

- Attachment A—a redacted copy of the amendment to the existing Express Mail & Priority Mail Contract 7;
- Attachment B—a certified statement required by 39 CFR 3015.5(c)(2); and
- Attachment C—an application for non-public treatment of materials to maintain redacted portions of the contract amendment and related financial information under seal.

The amendment extends the contract's termination date to the effective date of the Postal Service's annual change in prices of general applicability for Priority Mail and Express Mail scheduled for January 2013. *Id.* Attachment A at 2. The Postal Service intends for the amendment to become effective on the date that the Commission completes its review of the Notice. *Id.*

The Postal Service filed much of the supporting materials, including the related contract, under seal. *Id.* Attachment C. It maintains that the redacted portions of the contract amendment, customer-identifying information, and related financial information, should remain confidential. *Id.* at 3. This information includes the price structure, underlying costs and assumptions, pricing formulas, information relevant to the customer's mailing profile, and cost coverage projections. *Id.* The Postal Service asks the Commission to protect customer-identifying information from public disclosure indefinitely. *Id.* at 7.

II. Notice of Filings

Interested persons may submit comments on whether the changes presented in the Postal Service's Notice are consistent with the policies of 39 U.S.C. 3632, 3633, or 3642, 39 CFR 3015.5, and 39 CFR part 3020, subpart B. Comments are due no later than July 27, 2012. The public portions of these filings can be accessed via the Commission's Web site (*http://www.prc.gov*).

The Commission appoints Katalin K. Clendenin to serve as Public Representative in this docket.

III. Ordering Paragraphs

It is ordered:

1. The Commission shall review the Notice of United States Postal Service of Change in Termination Date Pursuant to Amendment to Express Mail & Priority Mail Contract 7, filed on July 19, 2012 in Docket No. CP2009–43.

2. Pursuant to 39 U.S.C. 505, Katalin K. Clendenin is appointed to serve as an officer of the Commission (Public Representative) to represent the

[1] Notice of United States Postal Service of Change in Termination Date Pursuant to Amendment to Express Mail & Priority Mail Contract 7, July 19, 2012 (Notice).

interests of the general public in this proceeding.

3. Comments by interested persons in these proceedings are due no later than July 27, 2012.

4. The Secretary shall arrange for publication of this order in the **Federal Register**.

By the Commission.

Shoshana M. Grove,

Secretary.

[FR Doc. 2012–18240 Filed 7–25–12; 8:45 am]

BILLING CODE 7710–FW–P

POSTAL SERVICE

Product Change—First-Class Package Service Negotiated Service Agreement

AGENCY: Postal Service™.

ACTION: Notice.

SUMMARY: The Postal Service gives notice of filing a request with the Postal Regulatory Commission to add a domestic shipping services contract to the list of Negotiated Service Agreements in the Mail Classification Schedule's Competitive Products List.

DATES: *Effective date:* July 26, 2012.

FOR FURTHER INFORMATION CONTACT: Elizabeth A. Reed, 202–268–3179.

SUPPLEMENTARY INFORMATION: The United States Postal Service® hereby gives notice that, pursuant to 39 U.S.C. 3642 and 3632(b)(3), on July 19, 2012, it filed with the Postal Regulatory Commission a *Request of the United States Postal Service to Add First-Class Package Service Contract 10 to Competitive Product List.* Documents are available at *www.prc.gov,* Docket Nos. MC2012–35, CP2012–43.

Stanley F. Mires,

Attorney, Legal Policy & Legislative Advice.

[FR Doc. 2012–18224 Filed 7–25–12; 8:45 am]

BILLING CODE 7710–12–P

SECURITIES AND EXCHANGE COMMISSION

[Investment Company Act Release No. 30144; 812–13966]

Credit Suisse Asset Management, LLC, et al.; Notice of Application

July 20, 2012.

AGENCY: Securities and Exchange Commission (''Commission'').

ACTION: Notice of an application for an order under section 12(d)(1)(J) of the Investment Company Act of 1940 (the ''Act'') for an exemption from sections 12(d)(1)(A) and (B) of the Act, under sections 6(c) and 17(b) of the Act for an exemption from sections 17(a)(1) and (2) of the Act, and under section 6(c) of the Act for an exemption from rule 12d1–2(a) under the Act.

SUMMARY OF THE APPLICATION: The requested order would (a) permit certain registered management investment companies to acquire shares of certain registered open-end management investment companies that are outside the same group of investment companies as the acquiring investment companies, and (b) permit funds of funds relying on rule 12d1–2 under the Act to invest in certain financial instruments.

APPLICANTS: Credit Suisse Asset Management, LLC (the ''Adviser''), Credit Suisse Commodity Return Strategy Fund (''CS Commodity Fund''), Credit Suisse Opportunity Funds (''CS Opportunity Funds''), Credit Suisse Trust (''CS Trust'') and Credit Suisse Securities (USA) LLC (the ''Distributor'').

FILING DATES: The application was filed on September 30, 2011, and amended on June 26, 2012. Applicants have agreed to file an amendment during the notice period, the substance of which is reflected in this notice.

HEARING OR NOTIFICATION OF HEARING: An order granting the application will be issued unless the Commission orders a hearing. Interested persons may request a hearing by writing to the Commission's Secretary and serving applicants with a copy of the request, personally or by mail. Hearing requests should be received by the Commission by 5:30 p.m. on August 14, 2012, and should be accompanied by proof of service on applicants, in the form of an affidavit or, for lawyers, a certificate of service. Hearing requests should state the nature of the writer's interest, the reason for the request, and the issues contested. Persons who wish to be notified of a hearing may request notification by writing to the Commission's Secretary.

ADDRESSES: Secretary, U.S. Securities and Exchange Commission, 100 F Street NE., Washington, DC 20549–1090. Applicants: c/o Ms. Joanne Doldo, Credit Suisse Asset Management, LLC, One Madison Avenue, New York, NY 10010.

FOR FURTHER INFORMATION CONTACT: Jean E. Minarick, Senior Counsel, at (202) 551–6811, or Daniele Marchesani, Branch Chief, at (202) 551–6821 (Division of Investment Management, Office of Investment Company Regulation).

SUPPLEMENTARY INFORMATION: The following is a summary of the application. The complete application may be obtained via the Commission's Web site by searching for the file number, or an applicant using the Company name box, at *http://www.sec.gov/search/search.htm* or by calling (202) 551–8090.

Applicants' Representations

1. The CS Commodity Fund and the CS Opportunity Funds are organized as Delaware statutory trusts and the CS Trust is organized as a Massachusetts business trust (each such entities a ''Trust,'' and collectively, the ''Trusts.''). Each Trust is an open-end management investment company registered under the Act. Each Trust other than the CS Commodity Fund is comprised of separate series that pursue distinct investment objectives and strategies. The CS Commodity Fund does not offer separate series. The Adviser, a Delaware limited liability company, is registered as an investment adviser under the Investment Advisers Act of 1940 (''Advisers Act'') and serves as investment adviser to each Underlying Fund (as defined below).[1] The Adviser may serve or may appoint one or more other investment advisers to serve as sub-adviser to an Underlying Fund pursuant to a sub-advisory agreement (each such other adviser, a ''Sub-Adviser'').[2] The Distributor is a Delaware limited liability company and is registered as a broker-dealer under the Securities Exchange Act of 1934 (the ''Exchange Act''). The Distributor serves as principal underwriter and distributor for the shares of the Underlying Funds (as defined below).

2. Applicants request an exemption to permit registered management investment companies that operate as a ''fund of funds'' and that are not part of the same ''group of investment companies,'' within the meaning of section 12(d)(1)(G)(ii) of the Act, as the Trusts (''Unrelated Funds of Funds'') to acquire shares of the CS Commodity Fund or the series of the other Trusts that do not operate as ''funds of funds'' (''Underlying Funds'')[3] in excess of the

[1] All references to the term ''Adviser'' include successors-in-interest to the Adviser. Successors-in-interest are limited to any entity resulting from a name change, a reorganization of the Adviser into another jurisdiction or a change in the type of business organization.

[2] Each Sub-Adviser will be registered or exempt from registration with the Commission as an investment adviser under the Advisers Act.

[3] Currently, the Underlying Funds include CS Commodity Fund; Credit Suisse Floating Rate High Income Fund and Credit Suisse Liquid Alternative Fund, each a series of the CS Opportunity Funds; and Commodity Return Strategy Portfolio, a series of CS Trust.

limits in section 12(d)(1)(A) of the Act, and to permit Underlying Funds, any principal underwriter for an Underlying Fund, and any broker or dealer registered under the Exchange Act (''Broker'') to sell shares of an Underlying Fund to an Unrelated Fund of Funds in excess of the limits in section 12(d)(1)(B) of the Act.[4] Applicants request that the relief apply to: (a) Each registered open-end management investment company or series thereof that currently or subsequently is part of the same ''group of investment companies,'' within the meaning of section 12(d)(1)(G)(ii) of the Act, as the Trusts, and that is advised by the Adviser or any entity controlling, controlled by, or under common control with the Adviser (such registered open-end management investment companies or their series are included in the term ''Underlying Funds''); (b) each Unrelated Fund of Funds that enters into a Participation Agreement (as defined below) with an Underlying Fund to purchase shares of the Underlying Fund; and (c) any principal underwriter to an Underlying Fund or Broker selling shares of an Underlying Fund.[5]

3. An Underlying Fund may invest up to 25% of its assets in a wholly-owned and controlled subsidiary of the Underlying Fund, organized under the laws of the Cayman Islands or another non-U.S. jurisdiction (a ''Cayman Sub'') in order to invest in commodity-related instruments and certain other instruments. The Adviser will serve as the investment adviser to both such Underlying Fund and Cayman Sub. The Cayman Sub is created for the purpose of assuring that the Underlying Fund continues to qualify as a regulated investment company for U.S. federal income tax purposes.

4. Each Unrelated Fund of Funds will be advised by an investment adviser, within the meaning of section 2(a)(20)(A) of the Act, that is registered as an investment adviser under the Advisers Act (an ''Unrelated Fund of Funds Adviser''). An Unrelated Fund of Funds or its Unrelated Fund of Funds Adviser may contract with an investment adviser that meets the definition of section 2(a)(20)(B) of the Act (an ''Unrelated Fund of Funds Subadviser''). Applicants state that Unrelated Funds of Funds will be interested in using the Underlying Funds as part of their overall investment strategy.

5. Applicants also request an exemption to the extent necessary to permit any existing or future funds that operate as ''funds of funds'' and that are part of the same ''group of investment companies,'' within the meaning of section 12(d)(1)(G)(ii) of the Act, as the Trusts (''Related Funds of Funds'') and which invest in Underlying Funds in reliance on section 12(d)(1)(G) of the Act, and which are also eligible to invest in securities (as defined in section 2(a)(36) of the Act) in reliance on rule 12d1–2 under the Act, to also invest, consistent with its investment objective, policies, strategies and limitations, in financial instruments that may not be securities within the meaning of section 2(a)(36) of the Act (''Other Investments'').[6]

6. Consistent with its fiduciary obligations under the Act, each Related Fund of Fund's board of trustees will review the advisory fees charged by the Related Fund of Fund's investment adviser to ensure that they are based on services provided that are in addition to, rather than duplicative of, services provided pursuant to the advisory agreement of any investment company in which the Related Fund of Funds may invest.

Applicants' Legal Analysis

Investments in Underlying Funds by Unrelated Funds of Funds

A. Section 12(d)(1)

1. Section 12(d)(1)(A) of the Act, in relevant part, prohibits a registered investment company from acquiring shares of an investment company if the securities represent more than 3% of the total outstanding voting stock of the acquired company, more than 5% of the total assets of the acquiring company, or, together with the securities of any other investment companies, more than 10% of the total assets of the acquiring company. Section 12(d)(1)(B) of the Act prohibits a registered open-end investment company, its principal underwriter, and any broker or dealer from selling the investment company's shares to another investment company if the sale will cause the acquiring company to own more than 3% of the acquired company's voting stock, or if the sale will cause more than 10% of the acquired company's voting stock to be owned by investment companies generally.

2. Section 12(d)(1)(J) of the Act provides that the Commission may exempt any person, security, or transaction, or any class or classes of persons, securities or transactions, from any provision of section 12(d)(1) if the exemption is consistent with the public interest and the protection of investors. Applicants seek an exemption under section 12(d)(1)(J) of the Act to permit Unrelated Funds of Funds to acquire shares of the Underlying Funds in excess of the limits in section 12(d)(1)(A), and an Underlying Fund, any principal underwriter for an Underlying Fund, and any Broker to sell shares of an Underlying Fund to an Unrelated Fund of Funds in excess of the limits in section 12(d)(1)(B) of the Act.

3. Applicants state that the terms and conditions of the proposed arrangement will adequately address the policy concerns underlying sections 12(d)(1)(A) and (B), which include concerns about undue influence by a fund of funds over underlying funds, excessive layering of fees, and overly complex fund structures. Accordingly, applicants believe that the requested exemption is consistent with the public interest and the protection of investors.

4. Applicants believe that neither an Unrelated Fund of Funds nor an Unrelated Fund of Funds Affiliate would be able to exert undue influence over the Underlying Funds.[7] To limit the control that an Unrelated Fund of Funds may have over an Underlying Fund, applicants propose a condition prohibiting the Unrelated Fund of Funds Adviser, any person controlling, controlled by, or under common control with the Unrelated Fund of Funds Adviser, and any investment company or issuer that would be an investment

[4] Certain of the Underlying Funds may in the future pursue their investment objectives through a master-feeder arrangement in reliance on section 12(d)(1)(E) of the Act. An Unrelated Fund of Funds may not invest in an Underlying Fund that operates as a feeder fund unless the Underlying Fund is part of the same group of investment companies (as defined in section 12(d)(1)(G)(ii) of the Act) as its corresponding master fund (each a ''Master Fund'').

[5] All entities that currently intend to rely on the requested order are named as applicants. Any other entity that relies on the order in the future will comply with the terms and conditions of the application. An Unrelated Fund of Funds may rely on the requested order only to invest in an Underlying Fund and not in any other registered investment company.

[6] Applicants request that the relief apply to each registered open-end management investment company or series thereof that operates as a ''fund of funds'' and that currently or subsequently is part of the same ''group of investment companies,'' within the meaning of section 12(d)(1)(G)(ii) of the Act, as the Trusts, and is advised by the Adviser or a Sub-Adviser or any entity controlling, controlled by or under common control with the Adviser.

[7] An ''Unrelated Fund of Funds Affiliate'' is an Unrelated Fund of Funds Adviser, Unrelated Fund of Funds Subadviser, a promoter, or a principal underwriter of an Unrelated Fund of Funds, and any person controlling, controlled by, or under common control with any of those entities. An ''Underlying Fund Affiliate'' is an investment adviser, sponsor, promoter, or principal underwriter of an Underlying Fund (or its respective Master Fund or Cayman Sub), and any person controlling, controlled by, or under common control with any of those entities.

company but for section 3(c)(1) or 3(c)(7) of the Act that is advised or sponsored by the Unrelated Fund of Funds Adviser or any person controlling, controlled by, or under common control with the Unrelated Fund of Funds Adviser (the ''Unrelated Fund of Funds Advisory Group'') from controlling (individually or in the aggregate) an Underlying Fund within the meaning of section 2(a)(9) of the Act. The same prohibition would apply to the Unrelated Fund of Funds Subadviser, any person controlling, controlled by or under common control with the Unrelated Fund of Funds Subadviser, and any investment company or issuer that would be an investment company but for section 3(c)(1) or 3(c)(7) of the Act (or portion of such investment company or issuer) advised or sponsored by the Unrelated Fund of Funds Subadviser or any person controlling, controlled by or under common control with the Unrelated Fund of Funds Subadviser (the ''Unrelated Fund of Funds Subadvisory Group''). Applicants propose other conditions to limit the potential for undue influence over the Underlying Funds, including that no Unrelated Fund of Funds or Unrelated Fund of Funds Affiliate (except to the extent it is acting in its capacity as an investment adviser to an open-end fund) will cause an Underlying Fund to purchase a security in an offering of securities during the existence of any underwriting or selling syndicate of which a principal underwriter is an Underwriting Affiliate (''Affiliated Underwriting''). An ''Underwriting Affiliate'' is a principal underwriter in any underwriting or selling syndicate that is an officer, director, member of an advisory board, investment adviser, subadviser, or employee of the Unrelated Fund of Funds, or a person of which any such officer, director, member of an advisory board, investment adviser, subadviser, or employee is an affiliated person. An Underwriting Affiliate does not include any person whose relationship to an Underlying Fund is covered by section 10(f) of the Act.

5. Applicants do not believe that the proposed arrangement will involve excessive layering of fees. The board of directors or trustees of each Unrelated Fund of Funds, including a majority of the directors or trustees who are not ''interested persons'' (within the meaning of section 2(a)(19) of the Act) (''Independent Trustees''), will find that the advisory fees charged under such advisory contract are based on services provided that will be in addition to, rather than duplicative of, the services provided under the advisory contract(s) of any Underlying Fund in which the Unrelated Fund of Funds may invest. In addition, an Unrelated Fund of Funds Adviser will waive fees otherwise payable to it by the Unrelated Fund of Funds in an amount at least equal to any compensation (including fees received pursuant to any plan adopted by an Underlying Fund (or its respective Master Fund) under rule 12b–1 under the Act) received from an Underlying Fund by the Unrelated Fund of Funds Adviser or an affiliated person of the Unrelated Fund of Funds Adviser, other than any advisory fees paid to the Unrelated Fund of Funds Adviser or its affiliated person, by an Underlying Fund (or its respective Master Fund or Cayman Sub), in connection with the investment by the Unrelated Fund of Funds in the Underlying Fund. Applicants also state that with respect to registered separate accounts that invest in an Unrelated Fund of Funds, no sales load will be charged at the Unrelated Fund of Funds level or at the Underlying Fund level.[8] Other sales charges and service fees, as defined in Rule 2830 of the Conduct Rules of the NASD (''NASD Conduct Rules''),[9] if any, will only be charged at the Unrelated Fund of Funds level or at the Underlying Fund level, not both. With respect to other investments in an Unrelated Fund of Funds, any sales charges and/or service fees charged with respect to shares of the Unrelated Fund of Funds will not exceed the limits applicable to a fund of funds as set forth in Rule 2830 of the NASD Conduct Rules.

6. Applicants submit that the proposed arrangement will not create an overly complex fund structure. Applicants note that no Underlying Fund will acquire securities of any investment company or company relying on section 3(c)(1) or 3(c)(7) of the Act in excess of the limits contained in section 12(d)(1)(A) of the Act, except in certain circumstances identified in condition 12 below. Applicants also represent that to ensure that Unrelated Funds of Funds comply with the terms and conditions of the requested exemption from section 12(d)(1)(A) of the Act, an Unrelated Fund of Funds must enter into a participation agreement between the relevant Trust, on behalf of the relevant Underlying Fund, and the Unrelated Fund of Funds (''Participation Agreement'') before investing in an Underlying Fund in excess of the limits in section 12(d)(1)(A). The Participation Agreement will require the Unrelated Fund of Funds to adhere to the terms and conditions of the requested order. The Participation Agreement will include an acknowledgment from the Unrelated Fund of Funds that it may rely on the requested order only to invest in the Underlying Funds and not in any other registered investment company.

7. Applicants state that investments by an Underlying Fund in a Cayman Sub also do not raise concerns about undue influence, layering of fees and complex structures. Applicants represent that: (a) The Underlying Fund will be the sole and legal beneficial owner of its Cayman Sub, which addresses concerns regarding pyramiding of voting control as a means of undue influence; (b) the Adviser and/or the Sub-Adviser will manage the investments of both the Underlying Fund and its Cayman Sub, which addresses concerns over undue influence by the Adviser; and (c) there will be no inappropriate layering of fees and expenses as a result of an Underlying Fund investing in a Cayman Sub. Applicants, further represent that the financial statements of the Cayman Sub will be consolidated with those of the Underlying Fund (or its respective Master Fund), if permitted by the applicable accounting standards. In addition, in assessing compliance with the asset coverage requirements under section 18(f) of the Act, an Underlying Fund (or its respective Master Fund) will deem the assets, liabilities and indebtedness of a Cayman Sub in which the Underlying Fund (or its respective Master Fund) invests as its own. Finally, the expenses of the Cayman Sub will be included in the total annual fund operating expenses in the prospectus of the Underlying Fund.

B. Section 17(a)

1. Section 17(a) of the Act generally prohibits sales or purchases of securities between a registered investment company and any affiliated person of the company. Section 2(a)(3) of the Act defines an ''affiliated person'' of another

[8] Applicants represent that each Unrelated Fund of Funds will represent in the Participation Agreement (as defined below) that no insurance company sponsoring a registered separate account funding variable insurance contracts will be permitted to invest in the Unrelated Fund of Funds unless the insurance company has certified to the Unrelated Fund of Funds that the aggregate of all fees and charges associated with each contract that invests in the Unrelated Fund of Funds, including fees and charges at the separate account, Unrelated Fund of Funds, and Underlying Fund levels, will be reasonable in relation to the services rendered, the expenses expected to be incurred, and the risks assumed by the insurance company.

[9] Any references to NASD Conduct Rule 2830 include any successor or replacement FINRA Rule to NASD Conduct Rule 2830.

person to include any person 5% or more of whose outstanding voting securities are directly or indirectly owned, controlled, or held with power to vote by the other person.

2. Applicants seek relief from section 17(a) to permit an Underlying Fund that is an affiliated person of an Unrelated Fund of Funds because the Unrelated Fund of Funds holds 5% or more of the Underlying Fund's shares to sell its shares to and redeem its shares from an Unrelated Fund of Funds. Applicants state that any proposed transactions directly between an Underlying Fund and an Unrelated Fund of Funds will be consistent with the policies of each Underlying Fund and Unrelated Fund of Funds. The Participation Agreement will require any Unrelated Fund of Funds that purchases shares from an Underlying Fund to represent that the purchase of shares from the Underlying Fund by an Unrelated Fund of Funds will be accomplished in compliance with the investment restrictions of the Unrelated Fund of Funds and will be consistent with the investment policies set forth in the Unrelated Fund of Funds' registration statement.

3. Section 17(b) of the Act authorizes the Commission to grant an order permitting a transaction otherwise prohibited by section 17(a) if it finds that (i) the terms of the proposed transaction are fair and reasonable and do not involve overreaching on the part of any person concerned; (ii) the proposed transaction is consistent with the policies of each registered investment company involved; and (iii) the proposed transaction is consistent with the general purposes of the Act. Section 6(c) of the Act permits the Commission to exempt any person or transactions from any provision of the Act if such exemption is necessary or appropriate in the public interest and consistent with the protection of investors and the purposes fairly intended by the policy and provisions of the Act.

4. Applicants submit that the proposed transactions satisfy the standards for relief under sections 17(b) and 6(c) of the Act.[10] Applicants state that the terms of the transactions are reasonable and fair and do not involve overreaching. Applicants note that any consideration paid for the purchase or redemption of shares directly from an Underlying Fund will be based on the net asset value of the Underlying Fund. Applicants state that the proposed transactions will be consistent with the policies of each Underlying Fund and each Unrelated Fund of Funds and with the general purposes of the Act.

Other Investments by Related Funds of Funds

1. Section 12(d)(1)(G) of the Act provides that section 12(d)(1) will not apply to securities of an acquired company purchased by an acquiring company if: (i) The acquiring company and acquired company are part of the same group of investment companies; (ii) the acquiring company holds only securities of acquired companies that are part of the same group of investment companies, government securities, and short-term paper; (iii) the aggregate sales loads and distribution-related fees of the acquiring company and the acquired company are not excessive under rules adopted pursuant to section 22(b) or section 22(c) of the Act by a securities association registered under section 15A of the Exchange Act or by the Commission; and (iv) the acquired company has a policy that prohibits it from acquiring securities of registered open-end management investment companies or registered unit investment trusts in reliance on section 12(d)(1)(F) or (G) of the Act.

2. Rule 12d1–2 under the Act permits a registered open-end investment company or a registered unit investment trust that relies on section 12(d)(1)(G) of the Act to acquire, in addition to securities issued by another registered investment company in the same group of investment companies, government securities, and short-term paper: (1) Securities issued by an investment company that is not in the same group of investment companies, when the acquisition is in reliance on section 12(d)(1)(A) or 12(d)(1)(F) of the Act; (2) securities (other than securities issued by an investment company); and (3) securities issued by a money market fund, when the investment is in reliance on rule 12d1–1 under the Act. For the purposes of rule 12d1–2, ''securities'' means any security as defined in section 2(a)(36) of the Act.

3. Applicants state that the proposed arrangement would comply with the provisions of rule 12d1–2 under the Act, but for the fact that the Related Funds of Funds may invest a portion of their assets in Other Investments. Applicants request an order under section 6(c) of the Act for an exemption from rule 12d1–2(a) to allow the Related Funds of Funds to invest in Other Investments. Applicants assert that permitting the Related Funds of Funds to invest in Other Investments as described in the application would not raise any of the concerns that the requirements of section 12(d)(1) were designed to address.

Applicants' Conditions

Investments in Underlying Funds by Unrelated Funds of Funds

Applicants agree that any order granting the requested relief will be subject to the following conditions:

1. The members of an Unrelated Fund of Funds Advisory Group will not control (individually or in the aggregate) an Underlying Fund (or its respective Master Fund) within the meaning of section 2(a)(9) of the Act. The members of an Unrelated Fund of Funds Subadvisory Group will not control (individually or in the aggregate) an Underlying Fund (or its respective Master Fund) within the meaning of section 2(a)(9) of the Act. If, as a result of a decrease in the outstanding voting securities of an Underlying Fund, the Unrelated Fund of Funds Advisory Group or the Unrelated Fund of Funds Subadvisory Group, each in the aggregate, becomes a holder of more than 25 percent of the outstanding voting securities of an Underlying Fund, it (except for any member of the Unrelated Fund of Funds Advisory Group or Unrelated Fund of Funds Subadvisory Group that is a separate account funding variable insurance contracts) will vote its shares of the Underlying Fund in the same proportion as the vote of all other holders of the Underlying Fund's shares. This condition does not apply to the Unrelated Fund of Funds Subadvisory Group with respect to an Underlying Fund (or its respective Master Fund) for which the Unrelated Fund of Funds Subadviser or a person controlling, controlled by, or under common control with the Unrelated Fund of Funds Subadviser acts as the investment adviser within the meaning of section 2(a)(20)(A) of the Act. A registered separate account funding variable insurance contracts will seek voting instructions from its contract holders and will vote its shares in accordance with the instructions received and will vote those shares for which no instructions were received in the same proportion as the shares for which instructions were received. An unregistered separate account funding variable insurance contracts will either (a) vote its shares of the Underlying Fund in the same proportion as the vote

[10] Applicants acknowledge that receipt of compensation by (a) an affiliated person of an Unrelated Fund of Funds, or an affiliated person of such person, for the purchase by the Unrelated Fund of Funds of shares of an Underlying Fund or (b) an affiliated person of an Underlying Fund, or an affiliated person of such person, for the sale by the Underlying Fund of its shares to an Unrelated Fund of Funds may be prohibited by section 17(e)(1) of the Act. The Participation Agreement also will include this acknowledgment.

of all other holders of the Underlying Fund's shares; or (b) seek voting instructions from its contract holders and vote its shares in accordance with the instructions received and vote those shares for which no instructions were received in the same proportion as the shares for which instructions were received.

2. No Unrelated Fund of Funds or Unrelated Fund of Funds Affiliate will cause any existing or potential investment by the Unrelated Fund of Funds in shares of an Underlying Fund to influence the terms of any services or transactions between the Unrelated Fund of Funds or an Unrelated Fund of Funds Affiliate and the Underlying Fund (or its respective Master Fund or Cayman Sub) or an Underlying Fund Affiliate.

3. The board of directors or trustees of an Unrelated Fund of Funds, including a majority of the Independent Trustees, will adopt procedures reasonably designed to ensure that the Unrelated Fund of Funds Adviser and any Unrelated Fund of Funds Subadviser(s) are conducting the investment program of the Unrelated Fund of Funds without taking into account any consideration received by the Unrelated Fund of Funds or an Unrelated Fund of Funds Affiliate from an Underlying Fund (or its respective Master Fund or Cayman Sub) or an Underlying Fund Affiliate in connection with any services or transactions.

4. Once an investment by an Unrelated Fund of Funds in the securities of an Underlying Fund exceeds the limit in section 12(d)(1)(A)(i) of the Act, the Board of Trustees (the ''Board'') of the Underlying Fund (or its respective Master Fund), including a majority of the Independent Trustees, will determine that any consideration paid by the Underlying Fund (or its respective Master Fund or Cayman Sub) to the Unrelated Fund of Funds or an Unrelated Fund of Funds Affiliate in connection with any services or transactions: (a) Is fair and reasonable in relation to the nature and quality of the services and benefits received by the Underlying Fund (or its respective Master Fund or Cayman Sub); (b) is within the range of consideration that the Underlying Fund (or its respective Master Fund or Cayman Sub) would be required to pay to another unaffiliated entity in connection with the same services or transactions; and (c) does not involve overreaching on the part of any person concerned. This condition does not apply with respect to any services or transactions between an Underlying Fund (or its respective Master Fund or Cayman Sub) and its investment adviser(s) or any person controlling, controlled by, or under common control with such investment adviser(s).

5. No Unrelated Fund of Funds or Unrelated Fund of Funds Affiliate (except to the extent it is acting in its capacity as an investment adviser to an Underlying Fund (or its respective Master Fund or Cayman Sub)) will cause an Underlying Fund (or its respective Master Fund or Cayman Sub) to purchase a security in any Affiliated Underwriting.

6. The Board of an Underlying Fund (or of its respective Master Fund), including a majority of the Independent Trustees, will adopt procedures reasonably designed to monitor any purchases of securities by the Underlying Fund (or its respective Master Fund or Cayman Sub) in an Affiliated Underwriting once an investment by an Unrelated Fund of Funds in the securities of the Underlying Fund exceeds the limit of section 12(d)(1)(A)(i) of the Act, including any purchases made directly from an Underwriting Affiliate. The Board of the Underlying Fund (or its respective Master Fund) will review these purchases periodically, but no less frequently than annually, to determine whether the purchases were influenced by the investment by the Unrelated Fund of Funds in shares of the Underlying Fund. The Board of the Underlying Fund (or its respective Master Fund) shall consider, among other things, (a) whether the purchases were consistent with the investment objectives and policies of the Underlying Fund (or its respective Master Fund or Cayman Sub); (b) how the performance of securities purchased in an Affiliated Underwriting compares to the performance of comparable securities purchased during a comparable period of time in underwritings other than Affiliated Underwritings or to a benchmark such as a comparable market index; and (c) whether the amount of securities purchased by the Underlying Fund (or its respective Master Fund or Cayman Sub) in Affiliated Underwritings and the amount purchased directly from an Underwriting Affiliate have changed significantly from prior years. The Board of the Underlying Fund shall take any appropriate actions based on its review, including, if appropriate, the institution of procedures designed to ensure that purchases of securities in Affiliated Underwritings are in the best interest of shareholders.

7. Each Underlying Fund (or its respective Master Fund) shall maintain and preserve permanently in an easily accessible place a written copy of the procedures described in the preceding condition, and any modifications to such procedures, and shall maintain and preserve for a period of not less than six years from the end of the fiscal year in which any purchase in an Affiliated Underwriting occurred, the first two years in an easily accessible place, a written record of each purchase of securities in Affiliated Underwritings once an investment by an Unrelated Fund of Funds in the securities of an Underlying Fund exceeds the limit in section 12(d)(1)(A)(i) of the Act, setting forth from whom the securities were acquired, the identity of the underwriting syndicate's members, the terms of the purchase, and the information or materials upon which the Board's determinations were made.

8. Before investing in shares of an Underlying Fund in excess of the limits in section 12(d)(1)(A), each Unrelated Fund of Funds and Underlying Fund will execute a Participation Agreement stating, without limitation, that their boards of directors or trustees and their investment advisers understand the terms and conditions of the order and agree to fulfill their responsibilities under the order. At the time of its investment in shares of an Underlying Fund in excess of the limit in section 12(d)(1)(A)(i), an Unrelated Fund of Funds will notify the Underlying Fund of the investment. At such time, the Unrelated Fund of Funds will also transmit to the Underlying Fund a list of the names of each Unrelated Fund of Funds Affiliate and Underwriting Affiliate. The Unrelated Fund of Funds will notify the Underlying Fund of any changes to the list of the names as soon as reasonably practicable after a change occurs. The Underlying Fund and the Unrelated Fund of Funds will maintain and preserve a copy of the order, the Participation Agreement, and the list with any updated information for the duration of the investment and for a period of not less than six years thereafter, the first two years in an easily accessible place.

9. Prior to approving any advisory contract under section 15 of the Act, the board of directors or trustees of each Unrelated Fund of Funds, including a majority of the Independent Trustees, will find that the advisory fees charged under such advisory contracts are based on services provided that will be in addition to, rather than duplicative of, the services provided under the advisory contract(s) of any Underlying Fund (or its respective Master Fund) in which the Unrelated Fund of Funds may invest. These findings and their basis will be recorded fully in the

minute books of the appropriate Unrelated Fund of Funds.

10. An Unrelated Fund of Funds Adviser will waive fees otherwise payable to it by the Unrelated Fund of Funds in an amount at least equal to any compensation (including fees received pursuant to any plan adopted by an Underlying Fund (or its respective Master Fund) under rule 12b–1 under the Act) received from an Underlying Fund (or its respective Master Fund or Cayman Sub) by the Unrelated Fund of Funds Adviser, or an affiliated person of the Unrelated Fund of Funds Adviser, other than any advisory fees paid to the Unrelated Fund of Funds Adviser or its affiliated person by the Underlying Fund (or its respective Master Fund or Cayman Sub), in connection with the investment by the Unrelated Fund of Funds in the Underlying Fund. Any Unrelated Fund of Funds Subadviser will waive fees otherwise payable to the Unrelated Fund of Funds Subadviser, directly or indirectly, by the Unrelated Fund of Funds in an amount at least equal to any compensation received from any Underlying Fund (or its respective Master Fund or Cayman Sub) by the Unrelated Fund of Funds Subadviser, or an affiliated person of the Unrelated Fund of Funds Subadviser, other than any advisory fees paid to the Unrelated Fund of Funds Subadviser or its affiliated person by the Underlying Fund (or its respective Master Fund or Cayman Sub), in connection with the investment by the Unrelated Fund of Funds in the Underlying Fund made at the direction of the Unrelated Fund of Funds Subadviser. In the event that the Unrelated Fund of Funds Subadviser waives fees, the benefit of the waiver will be passed through to the Unrelated Fund of Funds.

11. With respect to registered separate accounts that invest in an Unrelated Fund of Funds, no sales load will be charged at the Unrelated Fund of Funds level or at the Underlying Fund level. Other sales charges and service fees, as defined in NASD Conduct Rule 2830, if any, will only be charged at the Unrelated Fund of Funds level or at the Underlying Fund level, not both. With respect to other investments in an Unrelated Fund of Funds, any sales charges and/or service fees charged with respect to shares of the Unrelated Fund of Funds will not exceed the limits applicable to a fund of funds as set forth in NASD Conduct Rule 2830.

12. No Underlying Fund (or its respective Master Fund) will acquire securities of any other investment company or company relying on section 3(c)(1) or 3(c)(7) of the Act in excess of the limits contained in section 12(d)(1)(A) of the Act, except to the extent that such Underlying Fund (or its respective Master Fund): (a) Acquires such securities in compliance with section 12(d)(1)(E) of the Act; (b) receives securities of another investment company as a dividend or as a result of a plan of reorganization of a company (other than a plan devised for the purpose of evading section 12(d)(1) of the Act); (c) acquires (or is deemed to have acquired) securities of another investment company pursuant to exemptive relief from the Commission permitting such Underlying Fund (or its respective Master Fund) to: (i) Acquire securities of one or more investment companies for short-term cash management purposes, or (ii) engage in interfund borrowing and lending transactions; or (d) invests in a Cayman Sub that is a wholly-owned and controlled subsidiary of the Underlying Fund (or its respective Master Fund) as described in the Application. Further, no Cayman Sub will acquire securities of any other investment company or company relying on section 3(c)(1) or 3(c)(7) of the Act other than money market funds that comply with Rule 2a–7 for short-term cash management purposes.

Other Investments by Related Funds of Funds

Applicants agree that any order granting the requested relief will be subject to the following condition:

13. The Applicants will comply with all provisions of rule 12d1–2 under the Act, except for paragraph (a)(2) to the extent that it restricts any Related Fund of Funds from investing in Other Investments as described in the application.

For the Commission, by the Division of Investment Management, pursuant to delegated authority.

Kevin M. O'Neill,

Deputy Secretary.

[FR Doc. 2012–18272 Filed 7–25–12; 8:45 am]

BILLING CODE 8011–01–P

SECURITIES AND EXCHANGE COMMISSION

[Investment Company Act Release No. 30143; 813–248]

P.E. Partners III, LLC, et al.; Notice of Application

July 20, 2012.

AGENCY: Securities and Exchange Commission (''Commission'').

ACTION: Notice of an application for an order under sections 6(b) and 6(e) of the Investment Company Act of 1940 (the ''Act'') granting an exemption from all provisions of the Act, except sections 9, 17, 30 and 36 through 53, and the rules and regulations under the Act (the ''Rules and Regulations''). With respect to sections 17(a), (d), (f), (g), and (j) of the Act, sections 30(a), (b), (e), and (h) of the Act and the Rules and Regulations and rule 38a–1 under the Act, applicants request a limited exemption as set forth in the application.

SUMMARY OF THE APPLICATION: Applicants request an order to exempt certain limited liability companies formed for the benefit of eligible employees of Latham & Watkins LLP and its affiliates from certain provisions of the Act. Each limited liability company will be an ''employees' securities company'' within the meaning of section 2(a)(13) of the Act.

APPLICANTS: P.E. Partners III, LLC, VP Fund Investments 2004, LLC, VP Fund Investments 2006, LLC, VP Fund Investments 2008, LLC (collectively, the ''Existing Funds''), and Latham & Watkins LLP (''L&W'').

FILING DATES: The application was filed on March 24, 2000 and amended on December 29, 2000, January 30, 2004, October 19, 2004, February 19, 2009, January 31, 2012 and July 11, 2012.

HEARING OR NOTIFICATION OF HEARING: An order granting the application will be issued unless the Commission orders a hearing. Interested persons may request a hearing by writing to the Commission's Secretary and serving applicants with a copy of the request, personally or by mail. Hearing requests should be received by the Commission by 5:30 p.m. on August 15, 2012 and should be accompanied by proof of service on applicants, in the form of an affidavit or, for lawyers, a certificate of service. Hearing requests should state the nature of the writer's interest, the reason for the request, and the issues contested. Persons who wish to be notified of a hearing may request notification by writing to the Commission's Secretary.

ADDRESSES: Secretary, U.S. Securities and Exchange Commission, 100 F Street NE., Washington, DC 20549–1090. Applicants, 355 South Grand Avenue, Los Angeles, CA 90071.

FOR FURTHER INFORMATION CONTACT: Marilyn Mann, Special Counsel, at (202) 551–6813 or Mary Kay Frech, Branch Chief, at (202) 551–6821 (Division of Investment Management, Office of Investment Company Regulation).

SUPPLEMENTARY INFORMATION: The following is a summary of the application. The complete application

may be obtained via the Commission's Web site by searching for the file number, or for an applicant using the Company name box, at *http://www.sec.gov/search/seach.htm* or by calling (202) 551–8090.

Applicants' Representations

1. L&W, a Delaware limited liability partnership, together with its affiliated law partnerships, is an international law firm. Entities controlling, controlled by, or under common control with L&W, including any related law partnerships affiliated with L&W, are the ''L&W Entities.''

2. The Existing Funds are Delaware limited liability companies formed pursuant to limited liability company agreements. The applicants may in the future offer additional pooled investment vehicles substantially similar in all material respects (other than form of organization, investment objective and strategy, and other differences described in the application) to the same class of investors as those investing in the Existing Funds (the ''Subsequent Funds'' and, together with the Existing Funds, the ''Investment Funds''). The applicants anticipate that each Subsequent Fund also will be structured as a limited liability company, although a Subsequent Fund could be structured as a domestic or offshore general partnership, limited partnership or corporation. The operating agreements of the Investment Funds are the ''Investment Fund Agreements.'' An Investment Fund may include a single vehicle designed to issue interests in series. Each Investment Fund will be an employees' securities company within the meaning of section 2(a)(13) of the Act.

3. Each Existing Fund has been established to enable Eligible Investors to participate in certain investment opportunities that come to the attention of L&W, the L&W Entities or the Managing Members of the Existing Fund. These opportunities may include investments in operating businesses, separate accounts with registered or unregistered investment advisers, investments in pooled investment vehicles such as registered investment companies, investment companies exempt from registration under the Act, commodity pools, and other securities investments (each particular investment being referred to herein as an ''Investment''). Applicants submit that a substantial community of interest exists among L&W, the L&W Entities and the Members of each existing Investment Fund, given the purposes and operations of the Investment Funds and the nature of the Eligible Investors participating in the Investment Funds. L&W will ''control'' each Investment Fund within the meaning of section 2(a)(9) of the Act.

4. Interests in an Investment Fund (''Interests'') will be offered and sold in reliance upon the exemption from registration under section 4(2) of the Securities Act of 1933 (the ''Securities Act'') or pursuant to Regulation D under the Securities Act. Interests in any Investment Fund (other than short-term paper) will be offered only to L&W, L&W Entities, or Eligible Investors. Eligible Investors include persons who meet the following criteria: (a) Current or former partners of, or lawyers employed by, or key administrative employees of, L&W or an L&W Entity (''Eligible Employees''), the immediate family members of Eligible Employees, which are parents, children, spouses of children, spouses, and siblings, including step or adoptive relationships (''Immediate Family Members''), and trusts or other entities or arrangements the sole beneficiaries of which consist of Eligible Employees or their Immediate Family Members, or the settlors and the trustees of which consist of Eligible Employees or Eligible Employees together with Immediate Family Members (''Eligible Trusts''); and (b) who are ''accredited investors'' as that term is defined in Regulation D under the Securities Act, or, in the case of Eligible Trusts, a trust, entity or arrangement for which an Eligible Employee is a settlor and principal investment decision-maker.[1] L&W or any L&W Entity that acquires Interests in an Investment Fund will be an accredited investor. Prior to offering Interests to an Eligible Employee or Immediate Family Member, the Managing Members (as defined below) must reasonably believe that the Eligible Employee or Immediate Family Member is a sophisticated investor capable of understanding and evaluating the risks of participating in the Investment Fund without the benefit of regulatory safeguards. The beneficial owners of an Eligible Trust will be persons eligible to hold interests in employees' securities companies as defined in section 2(a)(13) of the Act.

5. An Investment Fund will be managed by its Managing Members. The Managing Members of an Investment Fund will consist of two or more current or former partners of L&W or an L&W Entity, each of whom is a member (''Member'') of the Investment Fund and serves as a managing member or member of the management committee of the Investment Fund (the ''Managing Members''). The Managing Members will register as investment advisers under the Investment Advisers Act of 1940 (the ''Advisers Act'') if such registration is required under the Advisers Act and the rules under the Advisers Act.

6. Each Investment Fund will have an administrator (the ''Administrator''). The Administrator may be an employee of L&W or an L&W Entity, or the Managing Members may determine to engage a third party to act as Administrator for the Investment Fund. The Administrator will not recommend Investments or exercise investment discretion. The only functions of the Administrator will be ministerial.

7. The specific investment objectives and strategies for an Investment Fund will be set forth in an informative memorandum relating to the Interests being offered, and in the relevant Investment Fund Agreement, and each Eligible Investor will receive a copy of the informative memorandum and Investment Fund Agreement before making an investment in the Investment Fund. The terms of an Investment Fund will be disclosed to each Eligible Investor at the time the investor is invited to participate in the Investment Fund.

8. The value of the Members' capital accounts will be determined at such times as the Managing Members deem appropriate or necessary; however, such valuation will be done at least annually at the Investment Fund's fiscal year-end. The Managing Members will value the assets held in a Member's capital account at the current market price (closing price) in the case of marketable securities. All other securities or assets will be valued at fair value.

9. Each Investment Fund will generally bear its own expenses. L&W or any L&W Entity, as applicable, may be reimbursed by an Investment Fund for reasonable and necessary out-of-pocket costs directly associated with the organization and operation of the Investment Fund, including administrative and overhead expenses. An Investment Fund may pay L&W or an L&W Entity, as applicable, for the time spent by Managing Members in discharging their duties, as managers of the Investment Fund, at rates not more than the rates charged to clients of L&W or any L&W Entity for services of such partners, and L&W or such L&W Entity will be reimbursed for a portion of the

[1] If an Eligible Trust is an entity or arrangement other than a trust, (a) the reference to ''settlor'' shall be construed to mean a person who created the vehicle or arrangement, alone or together with others, and also contributed funds or other assets to the vehicle, and (b) the reference to ''trustee'' shall be construed to mean a person who performs functions similar to those of a trustee.

salary and fringe benefits paid by L&W or such L&W Entity to the Administrator. No separate management fee will be charged to an Investment Fund by the Managing Members or the Administrator, and no compensation will be paid by an Investment Fund or its Members to the Managing Members or the Administrator for their services in such capacity, except to the extent provided above. Also, no fee of any kind will be charged in connection with the sale of Interests in an Investment Fund.

10. Within 120 days after the end of its fiscal year, or as soon as practicable thereafter, each Investment Fund will send its Members an annual report regarding its operations. The annual report of the Investment Fund will contain financial statements audited by an independent accounting firm. For purposes of this requirement, ''audit'' has the meaning defined in rule 1–02(d) of Regulation S–X. The Investment Fund will maintain a file containing any financial statements and other information received from the issuers of the Investments held by the Investment Fund, and will make such file available for inspection by its Members in accordance with its Investment Fund Agreement. Each Investment Fund, within 90 days or as soon as practicable after the end of each tax year of the Investment Fund, will transmit a report to each Member setting out information with respect to that Member's distributive share of income, gains, losses, credits and other items for federal income tax purposes, resulting from the operation of the Investment Fund during that year.

11. Members will not be entitled to redeem their Interests in an Investment Fund. A Member will be permitted to transfer his or her Interest only with the express consent of the Managing Members, which may be withheld in the discretion of the Managing Members, and then only to L&W, an L&W Entity or an Eligible Investor. A Member will not be subject to removal except for good cause as determined by the Managing Members, or if the Managing Members, in their discretion, deem such withdrawal to be in the best interest of the Investment Fund. The Interests of a Member who is no longer eligible to own interests in an employees' securities company as defined in section 2(a)(13) of the Act will be repurchased, subject to the minimum payment provisions described below. The Managing Members do not currently intend to require any Member to withdraw.[2] Upon repurchase or cancellation of a Member's Interest, the Managing Members will at a minimum pay to the Member the lesser of: (a) The amount actually paid by the Member to acquire the Interest plus interest less prior distributions; and (b) the fair market value of the Interest as determined at the time of repurchase or cancellation by the Managing Members. If a Member ceases to be a partner or employee of L&W or any L&W Entity, such Member will continue to be a Member of the Investment Fund, although with the consent of the Managing Members such Member may be permitted to assign the unfunded portion of his or her Capital Commitment (as defined below) to other Eligible Investors and/or be paid for his Interest as described above. The terms of any repurchase or cancellation will apply equally to any Immediate Family Member of, or Eligible Trust related to, an Eligible Employee.

12. Each Member will commit to contribute a fixed amount of capital as part of the capital of an Investment Fund (''Capital Commitment''). To provide flexibility in connection with an Investment Fund's obligation to contribute capital to fund an Investment, and the associated obligation of the Members to make capital contributions with respect to their Capital Commitments, an Investment Fund Agreement may provide that the Investment Fund may engage in borrowings in connection with such funding of Investments. All borrowings by an Investment Fund with respect to the funding of Investments will be non-recourse to the Members, but may be secured by a pledge of the Members' respective capital accounts and unfunded Capital Commitments. The Investment Funds will not borrow from any person if the borrowing would cause any person not named in section 2(a)(13) of the Act to own any outstanding securities of the Investment Fund (other than short-term paper). If L&W or an L&W Entity makes a loan to an Investment Fund, it (as lender) will be entitled to receive interest, provided that the rate will be no less favorable to the Investment Fund than the rate that could be obtained on an arm's length basis. An Investment Fund will not lend any funds to L&W or an L&W Entity. If L&W or an L&W Entity extends a loan to an Eligible Investor in respect of any Investment Fund, the loan will be made at an interest rate no less favorable than that which could be obtained on an arm's length basis. Loans will not be extended or arranged if otherwise prohibited by law, including the Sarbanes-Oxley Act of 2002.

13. An Investment Fund will not acquire any security issued by a registered investment company if immediately after the acquisition, the Investment Fund would own more than 3% of the total outstanding voting stock of the registered investment company.

Applicants' Legal Analysis

1. Section 6(b) of the Act provides, in part, that the Commission will exempt employees' securities companies from the provisions of the Act to the extent that the exemption is consistent with the protection of investors. Section 6(b) provides that the Commission will consider, in determining the provisions of the Act from which the company should be exempt, the company's form of organization and capital structure, the persons owning and controlling its securities, the price of the company's securities and the amount of any sales load, the disposition of the proceeds of any sales of the company's securities, how the company's funds are invested, and the relationship between the company and the issuers of the securities in which it invests. Section 2(a)(13) defines an employees' securities company as any investment company all of whose securities (other than short-term paper) are beneficially owned (a) by current or former employees, or persons on retainer, of one or more affiliated employers, (b) by immediate family members of such persons, or (c) by such employer or employers together with any of the persons in (a) or (b).

2. Section 7 of the Act generally prohibits investment companies that are not registered under section 8 of the Act from selling or redeeming their securities. Section 6(e) of the Act provides that, in connection with any order exempting an investment company from any provision of section 7, certain provisions of the Act, as specified by the Commission, will be applicable to the company and other persons dealing with the company as though the company were registered under the Act. Applicants request an order under sections 6(b) and 6(e) of the Act exempting applicants from all provisions of the Act, except sections 9, 17, 30, 36 through 53, and the Rules and Regulations. With respect to sections 17(a), (d), (f), (g) and (j) and 30(a), (b), (e) and (h) of the Act and the Rules and

[2] The following circumstances, among others, could warrant the withdrawal of a Member: if a Member ceases to be an Eligible Investor or is no longer deemed to be able to bear the economic risk of investment in the Investment Fund, adverse tax consequences were to inure to the Investment Fund were a particular Member to remain, or a situation in which the continued membership of the Member would violate applicable law or regulations. In addition, a Member may have its Interest redeemed due to its failure to make a capital contribution or other required payments.

Regulations, and rule 38a-1 under the Act, applicants request a limited exemption as set forth in the application.

3. Section 17(a) of the Act generally prohibits any affiliated person of a registered investment company, or any affiliated person of an affiliated person, acting as principal, from knowingly selling or purchasing any security or other property to or from the company. Applicants request an exemption from section 17(a) to permit an Investment Fund: to invest in or participate as a selling security-holder in a principal transaction with one or more affiliated persons (as defined in section 2(a)(3) of the Act) of an Investment Fund (''First-Tier Affiliates'') and affiliated persons of such First-Tier Affiliates (''Second-Tier Affiliates,'' and together with First-Tier Affiliates, ''Affiliates'').

4. Applicants submit that the exemptions sought from section 17(a) are consistent with the purposes of the Act and the protection of investors. Applicants state that the Members will be informed in an Investment Fund's offering materials of the possible extent of the dealings by such Investment Fund and any portfolio company with L&W, any L&W Entity or any affiliated person thereof. Applicants also state that, as experienced professionals acting on behalf of financial services businesses, the Members will be able to evaluate the risks associated with such dealings. Applicants assert that the community of interest among the Managing Members, the Members, L&W and the L&W Entities will serve to reduce the risk of abuse in transactions involving an Investment Fund and L&W, any L&W Entity or any affiliated person thereof.

5. Section 17(d) of the Act and rule 17d–1 under the Act prohibit any affiliated person of a registered investment company, or any affiliated person of such person, acting as principal, from participating in any joint arrangement with the registered investment company unless authorized by the Commission. Applicants request an exemption from section 17(d) and rule 17d–1 to the extent necessary to permit an Investment Fund to engage in transactions in which an Affiliate participates as a joint or a joint and several participant with such Investment Fund.

6. Joint transactions in which an Investment Fund could participate might include the following: (a) A joint investment by one or more Investment Funds in a security in which L&W or an L&W Entity, or another Investment Fund, is a joint participant or plans to become a participant; (b) a joint investment by one or more Investment Funds in another Investment Fund; and (c) a joint investment by one or more Investment Funds in a security in which an Affiliate is an investor or plans to become an investor, including situations in which an Affiliate has a partnership or other interest in, or compensation arrangements with, such issuer, sponsor or offeror.

7. Applicants assert that compliance with section 17(d) and rule 17d–1 would cause an Investment Fund to forego investment opportunities simply because a Member, L&W, an L&W Entity or other affiliated persons of the Investment Fund, L&W or the L&W Entities also had or contemplated making a similar investment. In addition, because attractive investment opportunities of the types considered by an Investment Fund often require that each participant make available funds in an amount that may be substantially greater than that available to the investor alone, there may be certain attractive opportunities of which an Investment Fund may be unable to take advantage except as a co-participant with other persons, including Affiliates. Applicants believe that the flexibility to structure co- and joint investments in the manner described above will not involve abuses of the type section 17(d) and rule 17d–1 were designed to prevent. Applicants acknowledge that any transactions subject to section 17(d) and rule 17d–1 for which exemptive relief has not been requested in the application would require specific approval by the Commission.

8. Section 17(f) of the Act designates the entities that may act as investment company custodians, and rule 17f–2 under the Act allows an investment company to act as self-custodian. Applicants request an exemption to permit the following exceptions from the requirements of rule 17f–2: (i) Compliance with paragraph (b) of the rule may be achieved through safekeeping in the locked files of L&W or an L&W Entity; (ii) for the purposes of the rule, (A) employees of L&W or an L&W Entity will be deemed employees of the Investment Funds, (B) the Administrator and the Managing Members of an Investment Fund will be deemed to be the officers of the Investment Funds (except that an Administrator that is an unaffiliated third party will not be considered an officer of the Investment Funds), and (C) the Managing Members of an Investment Fund will be deemed to be the board of directors of the Investment Fund; and (iii) instead of the verification procedure under paragraph (f) of the rule, verification will be effected quarterly by two persons who are either Managing Members or employees of L&W or an L&W Entity, each of whom shall have sufficient knowledge, sophistication and experience in business matters to perform such examination. Applicants expect that many of the Investment Funds' Investments will be evidenced only by partnership agreements or similar documents. Such instruments are most suitably kept in the files of the Investment Funds, where they can be referred to as necessary. Applicants will comply with all other provisions of rule 17f–2.

9. Section 17(g) and rule 17g–1 generally require the bonding of officers and employees of a registered investment company who have access to its securities or funds. Rule 17g–1 requires that a majority of directors who are not interested persons of a registered investment company (''disinterested directors'') take certain actions and give certain approvals relating to fidelity bonding. Applicants request an exemption from the requirement, contained in rule 17g–1, that a majority of the ''directors'' of the Investment Funds who are not ''interested persons'' of the respective Investment Funds (as defined in the Act) take certain actions and make certain approvals concerning bonding and request instead that such actions and approvals be taken by the Managing Members, regardless of whether any of them is deemed to be an interested person of the Investment Funds. Each Managing Member will be an interested person of the Investment Funds.

10. The Investment Funds request an exemption from the requirements of rule 17g–1(g) and (h) relating to the filing of copies of fidelity bonds and related information with the Commission and relating to the provisions of notices to the board of directors. Applicants also request an exemption from the requirements of rule 17g–1(j)(3) that the Investment Funds have a majority of disinterested directors, that those disinterested directors select and nominate any other disinterested directors, and that any legal counsel for those disinterested directors be independent legal counsel. Applicants believe that the filing requirements of rule 17g–1 are burdensome and unnecessary as applied to the Investment Funds. The Managing Members will maintain the materials otherwise required to be filed with the Commission by rule 17g–1(g) and the applicants agree that all such material will be subject to examination by the Commission and its staff. The Managing Members will designate a person to maintain the records otherwise required to be filed with the Commission under

paragraph (g) of the rule. The Investment Funds will comply with all other requirements of rule 17g–1. The fidelity bond of the Investment Funds will cover the Administrator, the Managing Members, and all employees of L&W or any L&W Entity who have access to the securities or funds of the Investment Funds.

11. Applicants request an exemption from the requirements, contained in section 17(j) of the Act and rule 17j–1 under the Act, that every registered investment company adopt a written code of ethics and every ''access person'' of such registered investment company report to the investment company with respect to transactions in any security in which such access person has, or by reason of the transaction acquires, any direct or indirect beneficial ownership in the security. Applicants request an exemption from the requirements in rule 17j–1, with the exception of rule 17j–1(b), because they are burdensome and unnecessary as applied to the Investment Funds and because the exemption is consistent with the policy of the Act. Requiring the Investment Funds to adopt a written code of ethics and requiring access persons to report each of their securities transactions would be time-consuming and expensive and would serve little purpose in light of, among other things, the community of interest among the Members of the Investment Fund and the Managing Members by virtue of their common association with L&W or an L&W Entity. Accordingly, the requested exemption is consistent with the purposes of the Act because the dangers against which section 17(j) and rule 17j–1 are intended to guard are not present in the case of the Investment Funds.

12. Applicants request an exemption from the requirements in sections 30(a), 30(b), and 30(e) of the Act, and the Rules and Regulations under those sections, that registered investment companies prepare and file with the Commission and mail to their shareholders certain periodic reports and financial statements. Applicants contend that the forms prescribed by the Commission for periodic reports have little relevance to the Investment Funds and would entail administrative and legal costs that outweigh any benefit to the Members. Applicants request exemptive relief to the extent necessary to permit the Investment Funds to report annually to their Members. Applicants also request an exemption from section 30(h) of the Act to the extent necessary to exempt the Administrator, the Managing Members, any 10 percent shareholder, and any other person who may be deemed to be an officer, director, member of an advisory board, or otherwise subject to section 30(h), from filing Forms 3, 4 and 5 under section 16 of the Securities Exchange Act of 1934 (''Exchange Act'') with respect to their ownership of Interests in the Investment Funds. Applicants assert that, because there is no trading market for Interests and the transfer of Interests is severely restricted, these filings are unnecessary for the protection of investors and burdensome to those required to make them.

13. Rule 38a–1 requires investment companies to adopt, implement and periodically review written policies reasonably designed to prevent violation of the federal securities laws and to appoint a chief compliance officer. Each Investment Fund will comply with rule 38a–1(a), (c) and (d), except that (i) the Managing Members of each Investment Fund will fulfill the responsibilities assigned to the board of directors under the rule, and (ii) because all Managing Members would be considered interested persons of the Investment Funds, approval by a majority of the disinterested board members required by rule 38a–1 will not be obtained. In addition, the Investment Funds will comply with the requirement in rule 38a–1(a)(4)(iv) that the chief compliance officer meet with the disinterested directors by having the chief compliance officer meet with the Managing Members.

Applicants' Conditions

The applicants agree that any order granting the requested relief will be subject to the following conditions:

1. Each proposed transaction, to which an Investment Fund is a party, otherwise prohibited by section 17(a) or section 17(d) and rule 17d–1 (the ''Section 17 Transactions'') will be effected only if the Managing Members determine that: (a) The terms of the Section 17 Transaction, including the consideration to be paid or received, are fair and reasonable to Members of the Investment Fund and do not involve overreaching of the Investment Fund or its Members on the part of any person concerned; and (b) the Section 17 Transaction is consistent with the interests of the Members of the Investment Fund, the Investment Fund's organizational documents and the Investment Fund's reports to its Members.

In addition, the Administrator will record and preserve a description of such Section 17 Transactions, the findings of the Managing Members, the information or materials upon which their findings are based and the basis therefor. All such records will be maintained for the life of the Investment Fund and at least six years thereafter, and will be subject to examination by the Commission and its staff. All such records will be maintained in an easily accessible place for at least the first two years.

2. If purchases or sales are made by an Investment Fund from or to an entity affiliated with the Investment Fund by reason of a Managing Member (a) serving as an officer, director, general partner or investment adviser of the entity, or (b) having a 5% or more investment in the entity, such individual will not participate in the Investment Fund's determination of whether or not to effect the purchase or sale.

3. The Managing Members will adopt, and periodically review and update, procedures designed to ensure that reasonable inquiry is made, prior to the consummation of any Section 17 Transaction, with respect to the possible involvement in the transaction of any affiliated person or promoter of or principal underwriter for the Investment Fund, or any affiliated person of such a person, promoter, or principal underwriter.

4. The Managing Members will not purchase for an Investment Fund any Investment in which a Co-Investor, as defined below, has or proposes to acquire the same class of securities of the same issuer, where the investment involves a joint enterprise or other joint arrangement within the meaning of rule 17d–1 in which the Investment Fund and the Co-Investor are participants, unless any such Co-Investor, prior to disposing of all or part of its investment: (a) Gives the Investment Fund holding such investment sufficient, but not less than one day's notice of its intent to dispose of its investment, and (b) refrains from disposing of its investment unless the Investment Fund holding such investment has the opportunity to dispose of its investment prior to or concurrently with, on the same terms as, and on a *pro rata* basis with the Co-Investor. The term ''Co-Investor'' with respect to an Investment Fund means any person who is: (a) An affiliated person of the Investment Fund; (b) L&W and any L&W Entity; (c) a current or former partner, lawyer employed by or key administrative employee of L&W or an L&W Entity; (d) a company in which the Administrator, a Managing Member, L&W or an L&W Entity acts as an officer, director, or general partner, or has a similar capacity to control the sale or disposition of the company's securities;

or (e) an investment vehicle offered, sponsored, or managed by L&W or an affiliated person of L&W.

The restrictions contained in this condition, however, shall not be deemed to limit or prevent the disposition of an investment by a Co-Investor: (a) To its direct or indirect wholly-owned subsidiary, to any company (a ''Parent'') of which the Co-Investor is a direct or indirect wholly-owned subsidiary, or to a direct or indirect wholly-owned subsidiary of its Parent; (b) to immediate family members of the Co-Investor or a trust established for the benefit of any such family member; (c) when the investment is comprised of securities that are listed on a national securities exchange registered under section 6 of the Exchange Act; (d) when the investment is comprised of securities that are NMS stocks pursuant to section 11A(a)(2) of the Exchange Act and rule 600(a) of Regulation NMS thereunder; (e) when the investment is comprised of securities that are listed on or traded on any foreign securities exchange or board of trade that satisfies regulatory requirements under the law of the jurisdiction in which such foreign securities exchange or board of trade is organized similar to those that apply to a national securities exchange or a national market system of securities; or (f) when the investment is comprised of securities that are government securities as defined in section 2(a)(16) of the Act.

5. An Investment Fund will send, within 120 days after the end of its fiscal year, or as soon as practicable thereafter, to each Member who had an interest in the Investment Fund at any time during the fiscal year then ended, reports and information regarding the Investments, including financial statements for such Investment Fund audited by an independent accounting firm. The Managing Members will make a valuation or have a valuation made of all of the assets of an Investment Fund as of each fiscal year end. In addition, within 90 days after the end of each tax year of the Investment Fund or as soon as practicable thereafter, the Investment Fund shall send a report to each person who was a Member at any time during the fiscal year then ended, setting forth such tax information as shall be necessary for the preparation by the Member of his or her federal and state income tax returns and a report of the investment activities of the Investment Fund during such year.

6. An Investment Fund will maintain and preserve, for the life of the Investment Fund and at least six years thereafter, such accounts, books, and other documents as constitute the record forming the basis for the audited financial statements and annual reports of the Investment Fund to be provided to its Members, and agrees that all such records will be subject to examination by the Commission and its staff. All such records will be maintained in an easily accessible place for at least the first two years.

For the Commission, by the Division of Investment Management, pursuant to delegated authority.

Kevin M. O'Neill,

Deputy Secretary.

[FR Doc. 2012–18241 Filed 7–25–12; 8:45 am]

BILLING CODE 8011–01–P

SECURITIES AND EXCHANGE COMMISSION

[Release No. 34–67480; File No. S7–24–11]

Order Extending Temporary Conditional Exemption in Connection With the Effectiveness of the Definition of Eligible Contract Participant

July 20, 2012.

I. Background

Title VII of the Dodd Frank Wall Street Reform and Consumer Protection Act (''Dodd-Frank Act'')[1] amended the definition of the term ''eligible contract participant'' in the Commodity Exchange Act (''CEA'').[2] This amended definition was incorporated by reference into the Securities Exchange Act of 1934 (''Exchange Act'').[3] Section 6(l) of the Exchange Act,[4] which was added by the Dodd-Frank Act,[5] made it unlawful, as of the July 16, 2011 effective date of Title VII (360 days after enactment of the Dodd-Frank Act), for any person to effect a transaction in a security-based swap with or for a person that is not an eligible contract participant, unless such transaction is effected on a national securities exchange registered pursuant to section 6(b) of the Exchange Act.[6]

In June 2011, the Securities and Exchange Commission (''Commission'') granted a temporary conditional exemption from section 6(l) of the Exchange Act to certain persons.[7] This temporary conditional exemption allowed those persons that met the definition of eligible contract participant as set forth in section 1a(12) of the Commodity Exchange Act (as in effect on July 20, 2010),[8] but that could potentially be considered non-eligible contract participants under the definition of eligible contract participant as amended by Title VII of the Dodd-Frank Act, to continue to be treated as eligible contract participants until the term eligible contract participant was further defined in final rulemaking. The Commission specified in the Effective Date Relief that the temporary exemption would expire on the effective date for the final rules further defining the term eligible contract participant.

II. Discussion

A. Post-Exemption Developments

Subsequent to the Commission's publication of the Effective Date Relief in June 2011, the Commission adopted, jointly with the Commodity Futures Trading Commission (''CFTC''), rules further defining the term eligible contract participant, which will be effective July 23, 2012.[9] In the Entity Definitions Adopting Release, the Commission reiterated that the temporary conditional exemption from section 6(l) of the Exchange Act would expire upon the effectiveness of the Entity Definitions Adopting Release.[10] The Commission provided further notice of the July 23, 2012 expiration of section 6(l) relief in its June 2012 policy statement regarding implementation of the Dodd-Frank Act (the ''Implementation Policy Statement'').[11]

On July 13, 2012, in response to the request for comment in the Implementation Policy Statement, the Financial Services Roundtable (''Roundtable'') submitted a comment

---

[1] Public Law 111–203 (July 21, 2010).

[2] Section 721(a) of the Dodd-Frank Act redesignated section 1a(12) of the Commodity Exchange Act, which contained the pre-Dodd-Frank Act definition of eligible contract participant, as section 1a(18), 7 U.S.C. 1a(18), and amended certain provisions of that definition.

[3] Exchange Act section 3(a)(65), 15 U.S.C. 78c(a)(65). Section 761(a) of the Dodd-Frank Act added section 3(a)(65) to the Exchange Act.

[4] 15 U.S.C. 78f(l).

[5] Section 761(e) of the Dodd-Frank Act.

[6] 15 U.S.C. 78f(b).

[7] Order Pursuant to Sections 15F(b)(6) and 36 of the Securities Exchange Act of 1934 Granting Temporary Exemptions and Other Temporary Relief, Together With Information on Compliance Dates for New Provisions of the Securities Exchange Act of 1934 Applicable to Security-Based Swaps, and Request for Comment, 76 FR 36287 (June 22, 2011) (''Effective Date Relief'').

[8] 7 U.S.C. 1a(12) (as in effect on July 20, 2010).

[9] *See* Further Definition of ''Swap Dealer,'' ''Security-Based Swap Dealer,'' ''Major Swap Participant,'' ''Major Security-Based Swap Participant'' and ''Eligible Contract Participant'', 77 FR 30596 (May 23, 2012) (''Entity Definitions Adopting Release'').

[10] *See* 77 FR at 30700.

[11] *See* Statement of General Policy on the Sequencing of the Compliance Dates for Final Rules Applicable to Security-Based Swaps Adopted Pursuant to the Securities Exchange Act of 1934 and the Dodd-Frank Wall Street Reform and Consumer Protection Act, 77 FR 35625, 35631 (June 14, 2012).

letter [12] requesting an extension of this relief until the effective date of the final rules defining the terms ''swap'' and ''security-based swap.'' [13]

B. Roundtable Request

In support of its request for an extension of section 6(l) relief, the Roundtable stated that the extension is necessary in order to give the industry more time to ''review the requirements and implement the systems necessary to conform to the newly finalized definition of [eligible contract participant].'' [14] The Roundtable further stated that linking the expiration of the section 6(l) relief to the effective date of the Product Definitions Adopting Release will be more efficient for market participants due to the large number of CFTC Title VII provisions that are already tied to the effectiveness of that release.[15] Finally, the Roundtable stated that the requested extension would result in harmonization with the CFTC.[16]

In light of the concerns expressed by the commenter, the Commission finds that it is necessary or appropriate in the public interest, and is consistent with the protection of investors, to extend the section 6(l) relief provided in the Effective Date Relief for the limited time requested, that is, until the effective date of the Product Definitions Adopting Release. Specifically, pursuant to the Commission's authority under Section 36 of the Exchange Act,[17] the Commission is extending the temporary conditional exemption provided in the Effective Date Relief from section 6(l) of the Exchange Act for persons that meet the definition of eligible contract participant as set forth in section 1a(12) of the CEA (as in effect on July 20, 2010). This temporary conditional exemption will expire on the effective date of the Product Definitions Adopting Release.

III. Conclusion

It is hereby ordered, pursuant to section 36(a) of the Exchange Act, that the temporary conditional exemption from section 6(l) of the Exchange Act provided in the Effective Date Release for persons that meet the definition of eligible contract participant as set forth in section 1a(12) of the Commodity Exchange Act (as in effect on July 20, 2010) is extended until 60 days after publication of the Product Definitions Adopting Release (Rel. No. 33–9338, 34–67453; File No. S7–16–11) in the **Federal Register**.

By the Commission.

Elizabeth M. Murphy,

Secretary.

[FR Doc. 2012–18194 Filed 7–25–12; 8:45 am]

BILLING CODE 8011–01–P

[12] Letter from Richard M. Whiting, Executive Director and General Counsel, Financial Services Roundtable, to Elizabeth M. Murphy, Secretary, Commission (July 13, 2012) (''Roundtable Extension Request''), available at: *http://www.sec.gov/comments/s7-05-12/s70512-9.pdf.*

[13] The Commission and the CFTC have approved the final rules (''Product Definitions Adopting Release''). *See http://sec.gov/rules/final/2012/33-9338.pdf.*

[14] Roundtable Extension Request at 2.

[15] *Id.* at 3.

[16] *Id.* The CFTC's existing relief from the CEA analogue to section 6(l) expires on the effective date of the Product Definitions Adopting Release. *See* Second Amendment to July 14, 2011 Order for Swap Regulation, 77 FR 41260, 41263 n.42 (July 13, 2012).

[17] 15 U.S.C. 78mm. Subject to certain exceptions, section 36 of the Exchange Act authorizes the Commission, by rule, regulation, or order, to conditionally or unconditionally exempt any person, security, or transaction, or any class or classes of persons, securities, or transactions, from any provision or provisions of the Exchange Act or any rule or regulation thereunder, to the extent that such exemption is necessary or appropriate in the public interest, and is consistent with the protection of investors.

SECURITIES AND EXCHANGE COMMISSION

[Release No. 34–67475; File No. SR–NYSEArca–2012–48]

Self-Regulatory Organizations; NYSE Arca, Inc.; Notice of Designation of a Longer Period for Commission Action on Proposed Rule Change Amending NYSE Arca Equities Rule 7.31(h) To Add a PL Select Order Type

July 20, 2012.

On May 22, 2012, NYSE Arca, Inc. (''NYSE Arca'' or ''Exchange'') filed with the Securities and Exchange Commission (''Commission''), pursuant to Section 19(b)(1) of the Securities Exchange Act of 1934 (''Act'') [1] and Rule 19b–4 thereunder,[2] a proposed rule change amending NYSE Arca Equities Rule 7.31(h) to add a PL Select Order type. The proposed rule change was published for comment in the **Federal Register** on June 8, 2012.[3] The Commission received no comments on the proposal.

Section 19(b)(2) of the Act [4] provides that, within 45 days of the publication of notice of the filing of a proposed rule change, or within such longer period up to 90 days as the Commission may designate if it finds such longer period to be appropriate and publishes its reasons for so finding or as to which the self-regulatory organization consents, the Commission shall either approve the proposed rule change, disapprove the proposed rule change, or institute proceedings to determine whether the proposed rule change should be disapproved. The 45th day for this filing is July 23, 2012. The Commission is extending this 45-day time period.

The Commission finds that it is appropriate to designate a longer period within which to take action on the proposed rule change so that it has sufficient time to consider the proposal. Pursuant to NYSE Arca Equities Rule 7.31(h)(4), a Passive Liquidity (''PL'') Order is an order to buy or sell a stated amount of a security at a specified, undisplayed price. The PL Select Order would be a subset of the PL Order that would not interact with certain contra-side interest, specifically, any incoming order that: (i) Has an immediate-or-cancel (''IOC'') time in force condition, (ii) is an ISO, or (iii) is larger than the size of the PL Select Order.

Accordingly, the Commission, pursuant to Section 19(b)(2) of the Act,[5] designates September 6, 2012, as the date by which the Commission should either approve or disapprove or institute proceedings to determine whether to disapprove the proposed rule change.

For the Commission, by the Division of Trading and Markets, pursuant to delegated authority.[6]

Kevin M. O'Neill,

Deputy Secretary.

[FR Doc. 2012–18216 Filed 7–25–12; 8:45 a.m.]

BILLING CODE 8011–01–P

[1] 15 U.S.C. 78s(b)(1).

[2] 17 CFR 240.19b–4.

[3] *See* Securities Exchange Act Release No. 67101 (June 4, 2012), 77 FR 34115 (June 8, 2012) (''Notice'').

[4] 15 U.S.C. 78s(b)(2).

[5] 15 U.S.C. 78s(b)(2).

[6] 17 CFR 200.30–3(a)(31).

SECURITIES AND EXCHANGE COMMISSION

[Release No. 34–67481; File No. SR–CBOE–2012–068]

Self-Regulatory Organizations; Chicago Board Options Exchange, Incorporated; Notice of Filing and Immediate Effectiveness of a Proposed Rule Change To Amend the Fees Schedule

July 20, 2012.

Pursuant to Section 19(b)(1) of the Securities Exchange Act of 1934 (the ''Act''),[1] and Rule 19b–4 thereunder,[2] notice is hereby given that on July 11, 2012, Chicago Board Options Exchange, Incorporated (the ''Exchange'' or ''CBOE'') filed with the Securities and Exchange Commission (the

[1] 15 U.S.C. 78s(b)(1).

[2] 17 CFR 240.19b–4.

''Commission'') the proposed rule change as described in Items I, II and III below, which items have been prepared by the Exchange. The Commission is publishing this notice to solicit comments on the proposed rule change from interested persons.

I. Self-Regulatory Organization's Statement of the Terms of Substance of the Proposed Rule Change

The Exchange proposes to amend its Fees Schedule. The text of the proposed rule change is available on the Exchange's Web site (*http://www.cboe.org/legal*), at the Exchange's Office of the Secretary, and at the Commission's Public Reference Room.

II. Self-Regulatory Organization's Statement of the Purpose of, and Statutory Basis for, the Proposed Rule Change

In its filing with the Commission, the Exchange included statements concerning the purpose of and basis for the proposed rule change and discussed any comments it received on the proposed rule change. The text of these statements may be examined at the places specified in Item IV below. The Exchange has prepared summaries, set forth in sections A, B, and C below, of the most significant aspects of such statements.

A. Self-Regulatory Organization's Statement of the Purpose of, and Statutory Basis for, the Proposed Rule Change

1. Purpose

The Exchange proposes to amend its Customer Large Trade Discount (the ''Discount''), which is intended to cap fees on large customer trades. Currently, regular customer transaction fees are charged up to the first 10,000 VIX options contracts in a customer order. The Exchange proposes to amend the Discount to state that for any executing Trading Permit Holder (''TPH'') whose affiliate [3] is the issuer of one or more securities, the combined total asset value of which is $1 billion or greater, that are based on or track the performance of VIX futures, regular customer transaction fees will only be charged up to the first 7,500 VIX options contracts per order in that month (''the Amendment''). On the first business day following the end of a calendar month, the Exchange will multiply the reported net asset value of each security that is based on or tracks the performance of VIX futures (as reported on the final calendar day of the month) by the amount of outstanding shares in that security to determine the total asset value of that security. The Exchange will then amalgamate the total asset values of all the securities that are based on or track the performance of VIX futures issued by the same issuer to determine if such issuer reaches the $1,000,000 [sic] threshold. The Exchange will then announce via information circular, on the first trading day of the calendar month, the TPH entities that are affiliated with issuers who met the threshold and therefore with which qualifying VIX options trades will only be charged transaction fees up to 7,500 contracts.

The purpose of the Amendment is to incentivize the creation and issuance of securities that are based on or track the performance of VIX futures.

The proposed change is to take effect on August 1, 2012.

2. Statutory Basis

The Exchange believes the proposed rule change is consistent with the Act and the rules and regulations thereunder applicable to the Exchange and, in particular, the requirements of Section 6(b) of the Act.[4] Specifically, the Exchange believes the proposed rule change is consistent with Section 6(b)(4) of the Act,[5] which provides that Exchange rules may provide for the equitable allocation of reasonable dues, fees, and other charges among its Trading Permit Holders and other persons using its facilities. The Amendment is reasonable because it will allow qualifying TPHs to pay lower transaction fees for large customer VIX options transactions. The Amendment is equitable and not unfairly discriminatory because it is intended to incentivize the creation and issuance of securities that are based on or track the performance of VIX futures, which provides more trading opportunities for all market participants. Further, the lower 7,500-contract threshold for TPHs that are affiliated with issuers who hit the $1,000,000 [sic] threshold will encourage such TPHs to bring more customer VIX options orders to the Exchange, and the resulting increased volume and liquidity will benefit all market participants trading VIX options.

B. Self-Regulatory Organization's Statement on Burden on Competition

CBOE does not believe that the proposed rule change will impose any burden on competition that is not necessary or appropriate in furtherance of the purposes of the Act.

C. Self-Regulatory Organization's Statement on Comments on the Proposed Rule Change Received From Members, Participants, or Others

The Exchange neither solicited nor received comments on the proposed rule change.

III. Date of Effectiveness of the Proposed Rule Change and Timing for Commission Action

The foregoing rule change has become effective pursuant to Section 19(b)(3)(A) [6] of the Act and paragraph (f) of Rule 19b–4 [7] thereunder. At any time within 60 days of the filing of the proposed rule change, the Commission summarily may temporarily suspend such rule change if it appears to the Commission that such action is necessary or appropriate in the public interest, for the protection of investors, or otherwise in furtherance of the purposes of the Act.

IV. Solicitation of Comments

Interested persons are invited to submit written data, views, and arguments concerning the foregoing, including whether the proposed rule change is consistent with the Act. Comments may be submitted by any of the following methods:

Electronic Comments

- Use the Commission's Internet comment form (*http://www.sec.gov/rules/sro.shtml*); or
- Send an email to *rule-comments@sec.gov.* Please include File Number SR–CBOE–2012–068 on the subject line.

Paper Comments

- Send paper comments in triplicate to Elizabeth M. Murphy, Secretary, Securities and Exchange Commission, 100 F Street NE., Washington, DC 20549–1090.

[3] *See* CBOE Rule 1.1(j), which defines ''affiliate'' as ''a person who, directly or indirectly, controls, is controlled by, or is under common control with, such other person.'' CBOE Rule 1.1(k) defines ''control'' as ''the power to exercise a controlling influence over the management or policies of a person, unless such power is solely the result of an official position with such person. Any person who owns beneficially, directly or indirectly, more than 20% of the voting power in the election of directors of a corporation, or more than 25% of the voting power in the election of directors of any other corporation which directly or through one or more affiliates owns beneficially more than 25% of the voting power in the election of directors of such corporation, shall be presumed to control such corporation.'' CBOE Rule 1.1(ff) defines ''person'' as ''an individual, partnership (general or limited), joint stock company, corporation, limited liability company, trust or unincorporated organization, or any governmental entity or agency or political subdivision thereof.''

[4] 15 U.S.C. 78f(b).

[5] 15 U.S.C. 78f(b)(4).

[6] 15 U.S.C. 78s(b)(3)(A).

[7] 17 CFR 240.19b–4(f).

All submissions should refer to File Number SR–CBOE–2012–068. This file number should be included on the subject line if email is used. To help the Commission process and review your comments more efficiently, please use only one method. The Commission will post all comments on the Commission's Internet Web site (*http://www.sec.gov/rules/sro.shtml*). Copies of the submission, all subsequent amendments, all written statements with respect to the proposed rule change that are filed with the Commission, and all written communications relating to the proposed rule change between the Commission and any person, other than those that may be withheld from the public in accordance with the provisions of 5 U.S.C. 552, will be available for Web site viewing and printing in the Commission's Public Reference Room, 100 F Street NE., Washington, DC 20549, on official business days between the hours of 10:00 a.m. and 3:00 p.m. Copies of the filing also will be available for inspection and copying at the principal office of the Exchange. All comments received will be posted without change; the Commission does not edit personal identifying information from submissions. You should submit only information that you wish to make available publicly. All submissions should refer to File Number SR–CBOE–2012–068 and should be submitted on or before August 16, 2012.

For the Commission, by the Division of Trading and Markets, pursuant to delegated authority.[8]

Kevin M. O'Neill,

Deputy Secretary.

[FR Doc. 2012–18242 Filed 7–25–12; 8:45 am]

BILLING CODE 8011–01–P

[8] 17 CFR 200.30–3(a)(12).

SECURITIES AND EXCHANGE COMMISSION

[Release No. 34–67482; File No. SR–CBOE–2012–042]

Self-Regulatory Organizations; Chicago Board Options Exchange, Incorporated; Order Granting Approval of Proposed Rule Change To List and Trade CBOE S&P 500 AM/PM Basis Options

July 20, 2012.

I. Introduction

On May 23, 2012, the Chicago Board Options Exchange, Incorporated (''Exchange'' or ''CBOE'') filed with the Securities and Exchange Commission (''Commission''), pursuant to Section 19(b)(1) of the Securities Exchange Act of 1934 (''Act'')[1] and Rule 19b–4 thereunder,[2] a proposed rule change relating to the listing and trading of cash-settled CBOE S&P 500 AM/PM Basis (''SPBAS'') options. The proposed rule change was published for comment in the **Federal Register** on June 6, 2012.[3] The Commission received no comments on the proposal. This order approves the proposed rule change.

II. Description of the Proposal

CBOE proposes to list and trade SPBAS options that reflect the difference between the Special Opening Quotation (''SOQ'') of the S&P 500 Index[4] and the closing level of the S&P 500 Index on the last trading day for SPBAS options (typically the third Friday of the month).

Design of the Product

At expiration, SPBAS options will settle against the following index calculation: SPBAS = MAX (100 + (SOQ of S&P 500)—(Closing Value of S&P 500), 0). In other words, SPBAS is the greater of (1) the SOQ of a.m.-settled S&P 500 Index (''SPX'') options minus the closing value of SPX plus 100 and (2) zero. The Exchange notes that this formulation ensures that the settlement value for SPBAS options can never be less than zero.

Because SPBAS options settle to the difference between the SOQ of the S&P 500 Index and the closing level of the S&P 500 Index on the third Friday of each month, an intraday value for SPBAS options will not be disseminated. Rather, prior to the open on all trading days other than the last trading day (typically the third Friday of the month), CBOE will disseminate a single value of 100 for SPBAS options through the Options Price Reporting Authority (''OPRA''), the Consolidated Tape Association (''CTA'') tape and/or the Market Data Index (''MDI'') feed. After the close of trading on the last trading day, CBOE will disseminate the exercise settlement value (calculated as described above) for the expiring contract.

[1] 15 U.S.C. 78s(b)(1).

[2] 17 CFR 240.19b–4.

[3] *See* Securities Exchange Act Release No. 67084 (May 31, 2012), 77 FR 33541 (June 6, 2012) (''Notice'').

[4] The SOQ is calculated per normal index calculation procedures and uses the opening (first) reported sales price in the primary market of each component stock in the index on the last business day (usually a Friday) before the expiration date. If a stock in the index does not open on the day on which the exercise-settlement value is determined, the last reported sales price in the primary market is used to calculate the exercise-settlement value.

Options Trading

SPBAS options will be quoted in points and fractions and one point will equal $100. The contract multiplier will be $100. The minimum tick size for series trading below $3 will be 0.05 ($5.00) and above $3 will be 0.10 ($10.00). The Exchange also proposes to list series at $1 or greater where the strike price is $200 or less and $5 or greater where the strike price is greater than $200.[5]

Initially, the Exchange proposes to list in-, at- and out-of-the-money strike prices (where the ''at-the-money'' strike price is 100) and may open for trading up to twelve near term expiration months.[6] New series will be added in accordance with Rule 29.4.01(d), which requires exercise prices to be reasonably related to the current value of the underlying index at the time new series are first opened for trading. Rules 24.9.01(d) and 24.9.04 will apply to the listing of additional series for SPBAS options. However, for purposes of those provisions, the Exchange proposes that the ''current index value'' will be 100, since that is the single value for SPBAS option that CBOE will disseminate during the life of an option. Rule 24.9.04 will generally bound the listing of additional series to within 30% of the current index value.[7] The Exchange also proposes to list LEAPS.

The Exchange states that it currently intends to trade SPBAS options electronically on the Hybrid Platform with a Designated Market Maker appointed to the class. Prior to the product launch, the Exchange represents that it will issue a circular announcing the specific trading platform and other relevant trading information concerning SPBAS options.

Trading Hours, Exercise and Settlement

The proposed options will expire on the Saturday following the third Friday of the expiring month and be cash-settled, P.M.-settled, and European-style. The trading hours for SPBAS options will be from 8:30 a.m. (Chicago time) to 3:15 p.m. (Chicago time), except that trading in expiring SPBAS options will close at 3:00 p.m. (Chicago time) on

[5] *See* proposed amendment to Rule 24.9.01(e) (Terms of Index Options Contracts). The Exchange also proposes to add new Interpretation and Policy .21 to Rule 5.5 (Series of Option Contracts Open for Trading), which will be an internal cross reference stating that the intervals between strike prices for SPBAS option series will be determined in accordance with Interpretation and Policy .01(e) to Rule 24.9.

[6] *See* proposed amendment to Rule 24.9(a)(2) (Terms of Index Options Contracts).

[7] The rule also provides the Exchange with the ability to add additional strikes in response to customer demand.

their last trading day.[8] When the last trading day is moved because of an Exchange holiday (such as when CBOE is closed on the Friday before expiration), the last trading day for expiring options will be Thursday.

Exercise will result in delivery of cash on the business day following expiration. The exercise-settlement amount will be equal to the difference between the exercise-settlement value and the exercise price of the option, multiplied by the contract multiplier ($100). SPBAS options will be p.m.-settled. The Exchange notes that it is proposing p.m.-settlement for SPBAS options because the exercise settlement value is based on the difference between the SOQ of the S&P 500 Index on the third Friday of the month and the closing value of the S&P 500 Index on the third Friday of the month. Since one of the values needed to determine the exercise settlement value for SPBAS options will not be determined until the close of trading on the third Friday of the month, the Exchange asserts that SPBAS options necessarily must be p.m.-settled.

If the exercise settlement value is not available or the normal settlement procedure cannot be utilized due to a trading disruption or other unusual circumstance, the settlement value will be determined in accordance with the rules and bylaws of the OCC.

Surveillance

CBOE has represented that it will use the same surveillance procedures currently utilized for each of the Exchange's other index options to monitor trading in SPBAS options. The Exchange further represents that these surveillance procedures shall be adequate to monitor trading in options on these option products. For surveillance purposes, the Exchange has represented that it will have access to information regarding trading activity in the pertinent underlying securities (*i.e.,* S&P 500 Index component securities).

Position Limits

The Exchange does not propose to establish any position or exercise limits for SPBAS options.[9] CBOE represents that SPBAS options will be subject to the same reporting and other requirements triggered for other options dealt in on the Exchange.[10]

Exchange Rules Applicable

Except as modified herein, the rules in Chapters I through XIX, XXIV, XXIVA, and XXIVB will equally apply to SPBAS options.

SPBAS options will be margined as ''broad-based index'' options, and under CBOE rules, especially Rule 12.3(c)(5)(A), the margin requirement for a short put or call shall be 100% of the current market value of the contract plus up to 15% of the aggregate contract value. Additional margin may be required pursuant to Exchange Rule 12.10.

CBOE proposes to designate SPBAS options as eligible for trading as Flexible Exchange Options as provided for in Chapters XXIVA (Flexible Exchange Options) and XXIVB (FLEX Hybrid Trading System).[11]

Capacity

CBOE represents that it has analyzed its capacity and believes that the Exchange and OPRA have the necessary systems capacity to handle the additional traffic associated with the listing of new series that will result from the introduction of SPBAS options.

Technical Change

In addition to proposing to introduce SPBAS options, CBOE proposes to correct an erroneous cross-reference in Rule 24.9.01(d) that was unintentionally created. In SR–CBOE–2006–41, among other things, obsolete Interpretations and Policies to Rule 24.9 were deleted and renumbering changes were made.[12] Specifically, current Interpretation and Policy .04 to Rule 24.9 was formerly Interpretation and Policy .05 to Rule 24.9. A cross-reference in Rule 24.9.01(d) to former Interpretation and Policy .05 in Rule 24.9.01(d) should have been similarly renumbered (from .05 to .04) in SR–CBOE–2006–41; however, it was not. CBOE now proposes to update Rule 24.9.01(d) with the correct cross-reference to Interpretation and Policy .04 to Rule 24.9.

III. Discussion and Commission Findings

The Commission finds that the proposed rule change is consistent with the requirements of the Act and the rules and regulations thereunder applicable to a national securities exchange.[13] Specifically, the Commission finds that the proposal is consistent with Section 6(b)(5) of the Act,[14] which requires, among other things, that the rules of a national securities exchange be designed to promote just and equitable principles of trade, to remove impediments to and perfect the mechanism of a free and open market and a national market system, and, in general, to protect investors and the public interest.

The Commission notes that the Exchange has stated that SPBAS options are designed to enable investors to gain exposure to or hedge the basis risk between SPX options traded on CBOE and p.m.-settled S&P 500 Index (''SPXPM'') options traded on C2 Options Exchange. As such, the Commission believes that CBOE's proposal gives options investors the ability to make an additional investment choice in a manner consistent with the requirements of Section 6(b)(5) of the Act.[15] Further, the Commission believes that the listing rules proposed by CBOE for SPBAS options are reasonable and consistent with the Act, as discussed below.

The Commission believes that permitting $1.00 strike price intervals if the strike price is equal to or less than $200 will provide investors with added flexibility in the trading of these options and will further the public interest by allowing investors to establish positions that are better tailored to meet their investment objectives. As CBOE explained, because the underlying interest for SPBAS options reflects the difference between the opening and closing values of the S&P 500 on the last trading day for SPBAS options, the exercise settlement value will generally be limited to a relatively narrow band of possible values. Specifically, the Exchange asserts that this difference has typically stayed within a ten-index-point range.[16] Because of this

[8] *See* proposed Interpretation and Policy .03 to Rule 24.6 (Days and Hours of Business). Trading in expiring SPXPM options closes at 3:00 p.m. (Chicago time) on their last day of trading. The Exchange is proposing to match the trading hours of SPBAS options with SPXPM options. *See* Securities and Exchange Act Release No. 65630 (October 26, 2011), 76 FR 67510 (November 1, 2011) (SR–C2–2011–030) (notice of filing and immediate effectiveness of proposed rule change to close trading at 3 p.m. Chicago time on the last day of trading of expiring SPXPM options).

[9] *See* proposed amendments to Rules 24.4 (Position Limits for Broad-Based Index Options) and 24.5 (Exercise Limits).

[10] *See* Rule 4.13 (Reports Related to Position Limits).

[11] *See* proposed amendments to Rules 24A.7 (Position Limits and Reporting Requirements), 24A.8 (Exercise Limits), 24B.7 (Position Limits and Reporting Requirements) and 24B.8 (Exercise Limits).

[12] *See* Securities Exchange Act Release No. 54000 (June 15, 2006), 71 FR 35961 (June 22, 2006) (SR–CBOE–2006–41).

[13] In approving this proposed rule change, the Commission has considered the proposed rule's impact on efficiency, competition, and capital formation. *See* 15 U.S.C. 78c(f).

[14] 15 U.S.C. 78f(b)(5).

[15] 15 U.S.C. 78f(b)(5).

[16] *See* Notice, *supra* note 3 (providing data on the historical spreads between the opening and closing values of the S&P 500).

characteristic, the Commission believes that the implementation of $1 strike price intervals for SPBAS options, within the parameters of CBOE Rule 24.9, is appropriate.[17]

The Commission notes that the Exchange proposes to apply its existing index rules regarding the listing of new series and additional series to SPBAS options. Specifically, exercise prices will be required to be reasonably related to the value of the underlying index and generally must be within 30% of the current index value. The Exchange has clarified that for purposes of SPBAS options, ''current index value'' will be 100 because that is the single value that will be disseminated for SPBAS options during the life of an option, as discussed further below. Given the design of this product, the Commission believes that this is appropriate and consistent with the Act.

The Commission notes that an intraday value for SPBAS options will not be disseminated and that, prior to the open on all trading days other than the last trading day, CBOE will disseminate a single value of 100 for SPBAS options through OPRA, the CTA and/or the MDI feed. The Commission notes further that, after the close of trading on the last trading day, CBOE will disseminate the exercise settlement value for the expiring SPBAS contract. The value of the index may vary from 100 only on the last trading day and would remain 100 on all other trading days. Moreover, because the closing value of the S&P 500 on the last trading day is a necessary component of the SBPAS option settlement value calculation, that value cannot be calculated until the end of the day on the last trading day.

The Exchange has also proposed that SPBAS options be p.m.-settled. As discussed above, the Exchange asserts that p.m.-settlement is necessary because the closing settlement value of the S&P 500 on the third Friday of the month (a necessary component of the SPBAS option settlement value) cannot be determined until the close of trading. The Commission believes that the historic concerns regarding p.m.-settlement should not be raised by the introduction of SPBAS options.[18]

The Exchange has proposed not to impose position or exercise limits on SPBAS options on the basis that SPBAS options should be treated similarly to SPX and SPXPM options, which are not subject to position or exercise limits. The Commission notes that the SPBAS exercise settlement value is based on the difference between the opening and closing values of the S&P 500 Index on expiration Fridays, and that SPX and SPXPM are based on the S&P 500 Index opening and closing values, respectively. Furthermore, as noted above, SPBAS options could be used to gain exposure to or hedge the basis risk between SPX and SPXPM options. As such, the Commission believes that CBOE's proposal not to apply position or exercise limits to SPBAS options is appropriate and consistent with the Act.

CBOE also proposes to margin SPBAS options as broad-based index options. The Commission believes that CBOE's proposed rules relating to margin requirements are appropriate. The Commission also believes that CBOE's proposal to allow SPBAS options to be eligible for trading as FLEX options is consistent with the Act. The Commission previously approved rules relating to the listing and trading of FLEX options on CBOE, which give investors and other market participants the ability to individually tailor, within specified limits, certain terms of those options.[19]

The Commission notes that CBOE has represented that it has an adequate surveillance program to monitor trading of SPBAS options and intends to apply its existing surveillance program for index options to support the trading of these options. Further, CBOE is a member of the ISG and can obtain trading activity in information in the underlying securities (*i.e.,* S&P 500 component securities).

In approving the proposed listing and trading of SPBAS options, the Commission has also relied upon CBOE's representation that it has the necessary systems capacity to support the new options series that will result from this proposal.

Lastly, the Commission believes that CBOE's proposal to update CBOE Rule 24.9.01(d) with the correct cross-reference to Interpretation and Policy .04 to Rule 24.9 is consistent with the Act.

IV. Conclusion

It is therefore ordered, pursuant to Section 19(b)(2) of the Act,[20] that the proposed rule change (SR–CBOE–2012–042) be, and it hereby is, approved.

For the Commission, by the Division of Trading and Markets, pursuant to delegated authority.[21]

Kevin M. O'Neill,

Deputy Secretary.

[FR Doc. 2012–18243 Filed 7–25–12; 8:45 am]

BILLING CODE 8011–01–P

[17] In addition, the Commission notes that CBOE has represented that it has analyzed its capacity and believes the Exchange and OPRA have the necessary systems capacity to handle the additional traffic associated with the listing and trading of $1 strikes (where the strike price is less than $200) for SPBAS options.

[18] For a detailed discussion of the Commission's traditional concerns and policies regarding p.m.-settlement, *see* Securities Exchange Act Release No. 65256 (September 2, 2011), 76 FR 55969 (September 9, 2011) (SR–C2–2011–008) (''SPXPM Filing'').

[19] *See* Securities Exchange Act Release No. 31910 (February 23, 1993), 58 FR 12056 (March 2, 1993).

[20] 15 U.S.C. 78s(b)(2).

[21] 17 CFR 200.30–3(a)(12).

SECURITIES AND EXCHANGE COMMISSION

[Release No. 34–67474; File No. SR–BX–2012–051]

Self-Regulatory Organizations; NASDAQ OMX BX, Inc.; Notice of Filing and Immediate Effectiveness of Proposed Rule Change Relating to Routing Fees

July 20, 2012.

Pursuant to Section 19(b)(1) of the Securities Exchange Act of 1934 (''Act''),[1] and Rule 19b–4 thereunder,[2] notice is hereby given that on July 10, 2012, NASDAQ OMX BX, Inc. (''BX'' or ''Exchange'') filed with the Securities and Exchange Commission (''Commission'') the proposed rule change as described in Items I, II, and III below, which Items have been prepared by the Exchange. The Commission is publishing this notice to solicit comments on the proposed rule change from interested persons.

I. Self-Regulatory Organization's Statement of the Terms of Substance of the Proposed Rule Change

The Exchange proposes to amend Chapter XV, Section 2 entitled ''BX Options Market—Fees and Rebates'' to amend a Customer fee for routing options to The NASDAQ Options Market (''NOM'').

The text of the proposed rule change is available on the Exchange's Web site at *http://www.nasdaqtrader.com/micro.aspx?id=BXRulefilings,* at the principal office of the Exchange, and at the Commission's Public Reference Room.

II. Self-Regulatory Organization's Statement of the Purpose of, and Statutory Basis for, the Proposed Rule Change

In its filing with the Commission, the Exchange included statements concerning the purpose of and basis for the proposed rule change and discussed any comments it received on the proposed rule change. The text of these

[1] 15 U.S.C. 78s(b)(1).

[2] 17 CFR 240.19b–4.

statements may be examined at the places specified in Item IV below. The Exchange has prepared summaries, set forth in sections A, B, and C below, of the most significant aspects of such statements.

A. Self-Regulatory Organization's Statement of the Purpose of, and Statutory Basis for, the Proposed Rule Change

1. Purpose

The Exchange recently filed a proposal to adopt fees for routing contracts to markets other the BX Options market.[3] Specifically, the Exchange adopted the following routing fees in Chapter XV, Section 2(4):

Exchange	Customer	Firm/market maker/broker-dealer	Professional
BATS (Penny Pilot)	$0.55	$0.55	$0.55
BOX	0.11	0.55	0.11
CBOE	0.11	0.55	0.31
CBOE orders greater than 99 contracts in ETFs, ETNs and HOLDRS)	0.29	N/A	0.31
C2	0.55	0.55	0.55
ISE (Standard)	0.11	0.55	0.29
ISE (Select Symbols) *	0.31	0.55	0.39
NOM	0.11	0.55	0.55
NYSE Arca (Penny Pilot)	0.55	0.55	0.55
NYSE Amex	0.11	0.55	0.31
PHLX (for all options than PHLX Select Symbols)	0.11	0.55	0.36
PHLX Select Symbols **	0.50	0.55	0.55

The Exchange inadvertently noted that the NOM Customer routing fee is $0.11 per contract. NOM assesses a Customer Fee to Remove Liquidity in Penny Pilot Options of $0.45 per contract.[4] The routing fees are proposed to recoup costs that the Exchange incurs for routing and executing certain orders on away markets.

BX currently recoups clearing and transaction charges incurred by the Exchange as well as certain other costs incurred by the Exchange when routing to away markets, such as administrative and technical costs associated with operating the order router, membership fees at away markets, and technical costs associated with routing.[5] For example, BX incurs costs related to the Nasdaq Options Services LLC (''NOS''), a member of the Exchange and the Exchange's exclusive order router.[6] Each time NOS routes an order to an away market, NOS is charged a $0.06 clearing fee and, in the case of certain exchanges, a transaction fee is also charged in certain symbols, which fees are passed through to the Exchange. The Exchange proposes to recoup a portion of the above costs along with the NOM Customer routing fee of $0.45 per contract when routing Customer orders to NOM. The Exchange is proposing a NOM Customer routing fee of $0.55 per contract.[7] While the Exchange would incur a cost of $0.56 per contract to route a Customer order to NOM, the Exchange has determined to assess a fee of $0.55 per contract for routing Customer orders to NOM.

2. Statutory Basis

BX believes that the proposed rule changes are consistent with the provisions of Section 6 of the Act,[8] in general, and with Section 6(b)(4) of the Act,[9] in particular, in that they provide for the equitable allocation of reasonable dues, fees and other charges among members and issuers and other persons using any facility or system which BX operates or controls.

The amended NOM Customer routing fee is reasonable because it seeks to recoup costs that are incurred by the Exchange when routing Customer orders to NOM on behalf of members. Each destination market's transaction charge varies and there is a standard clearing charge for each transaction incurred by the Exchange along with other administrative and technical costs [10] that are incurred by the Exchange. The Exchange believes that the proposed NOM Customer routing fee would enable the Exchange to recover the remove fee assessed to each market participant by NOM, plus clearing and other administrative and technical fees for the execution of orders routed to BX and executed on NOM.

The Exchange also believes that the amended NOM Customer routing fee is equitable and not unfairly discriminatory because it would be uniformly applied to all market participant Customer orders that are routed to NOM to cover the cost to route the order. The Exchange applied a similar methodology in calculating the routing fees for each market participant by adding not more than a $0.11 per contract fee to the away market's remove fee to determine BX routing fees.

B. Self-Regulatory Organization's Statement on Burden on Competition

BX does not believe that the proposed rule change will impose any burden on competition not necessary or appropriate in furtherance of the purposes of the Act. In addition, a BX Participant may designate an order as not available for routing to avoid routing fees.[11]

C. Self-Regulatory Organization's Statement on Comments on the Proposed Rule Change Received From Members, Participants, or Others

No written comments were either solicited or received.

[3] *See* Securities Exchange Act Release No. 67339 (July 3, 2012), 77 FR 405688 (July 10, 2012) (SR–BX–2012–043).

[4] *See* NOM Rules at Chapter XV, Section 2(4).

[5] In addition to membership fees and transaction fees, the Exchange also incurs an Options Regulatory Fee when routing to an away market that assesses that fee.

[6] *See* BX Rules at Chapter VI, Section 11(e) (Order Routing).

[7] The Exchange calculates its routing fees by totaling its costs which include the remove fee at the away market ($0.45 per contract), a $0.06 per contract clearing fee and another $0.05 per contract fee associated with administrative and technical costs associated with operating NOS. This would total $0.56 per contract to route a Customer order to NOM.

[8] 15 U.S.C. 78f.

[9] 15 U.S.C. 78f(b)(4).

[10] The Exchange utilizes the Nasdaq Options Services LLC (''NOS''), a member of the Exchange and the Exchange's exclusive order router to route orders in options listed and open for trading on the BX to destination markets. *See* Securities Exchange Act Release No. 67256 (June 26, 2012) (SR–BX–2012–030).

[11] *See* BX Rules at Chapter VI, Section 11(e).

III. Date of Effectiveness of the Proposed Rule Change and Timing for Commission Action

The foregoing rule change has become effective pursuant to Section 19(b)(3)(A)(ii) of the Act.[12] At any time within 60 days of the filing of the proposed rule change, the Commission summarily may temporarily suspend such rule change if it appears to the Commission that such action is necessary or appropriate in the public interest, for the protection of investors, or otherwise in furtherance of the purposes of the Act. If the Commission takes such action, the Commission shall institute proceedings to determine whether the proposed rule should be approved or disapproved.

IV. Solicitation of Comments

Interested persons are invited to submit written data, views, and arguments concerning the foregoing, including whether the proposed rule change is consistent with the Act. Comments may be submitted by any of the following methods:

Electronic Comments

- Use the Commission's Internet comment form (*http://www.sec.gov/rules/sro.shtml*); or
- Send an email to *rule-comments@sec.gov*. Please include File Number SR–BX–2012–051 on the subject line.

Paper Comments

- Send paper comments in triplicate to Elizabeth M. Murphy, Secretary, Securities and Exchange Commission, 100 F Street NE., Washington, DC 20549–1090.

All submissions should refer to File Number SR–BX–2012–051. This file number should be included on the subject line if email is used. To help the Commission process and review your comments more efficiently, please use only one method. The Commission will post all comments on the Commission's Internet Web site (*http://www.sec.gov/rules/sro.shtml*). Copies of the submission, all subsequent amendments, all written statements with respect to the proposed rule change that are filed with the Commission, and all written communications relating to the proposed rule change between the Commission and any person, other than those that may be withheld from the public in accordance with the provisions of 5 U.S.C. 552, will be available for Web site viewing and printing in the Commission's Public Reference Room, 100 F Street NE., Washington, DC 20549, on official business days between the hours of 10:00 a.m. and 3:00 p.m. Copies of the filing also will be available for inspection and copying at the principal office of the Exchange. All comments received will be posted without change; the Commission does not edit personal identifying information from submissions. You should submit only information that you wish to make available publicly. All submissions should refer to File Number SR–BX–2012–051 and should be submitted on or before August 16, 2012.

For the Commission, by the Division of Trading and Markets, pursuant to delegated authority.[13]

Kevin M. O'Neill,

Deputy Secretary.

[FR Doc. 2012–18215 Filed 7–25–12; 8:45 am]

BILLING CODE 8011–01–P

[12] 15 U.S.C. 78s(b)(3)(A)(ii).

[13] 17 CFR 200.30–3(a)(12).

SECURITIES AND EXCHANGE COMMISSION

[Release No. 34–67427; File No. SR–FINRA–2012–034]

Self-Regulatory Organizations; Financial Industry Regulatory Authority, Inc.; Notice of Filing and Immediate Effectiveness of Proposed Rule Change To Amend TRACE Reporting Rules Relating to Transfers of TRACE–Eligible Securities To Create or Redeem Instruments Such as ETFs

July 12, 2012.

Pursuant to Section 19(b)(1) of the Securities Exchange Act of 1934 (the ''Act'')[1] and Rule 19b–4 thereunder,[2] notice is hereby given that on July 11, 2012, Financial Industry Regulatory Authority, Inc. (''FINRA'') filed with the Securities and Exchange Commission (''Commission'') the proposed rule change, as described in Items I, II, and III below, which Items have been prepared by FINRA. FINRA has designated the proposed rule change as constituting a ''non-controversial'' rule change under paragraph (f)(6) of Rule 19b–4 under the Act,[3] which renders the proposal effective upon receipt of this filing by the Commission. The Commission is publishing this notice to solicit comment on the proposed rule change from interested persons.

[1] 15 U.S.C. 78s(b)(1).

[2] 17 CFR 240.19b–4.

[3] 17 CFR 240.19b–4(f)(6).

I. Self-Regulatory Organization's Statement of the Terms of Substance of the Proposed Rule Change

FINRA is proposing to amend FINRA Rule 6730(e) to expressly exclude from the Trade Reporting and Compliance Engine (''TRACE'') trade reporting requirements transfers of TRACE–Eligible Securities for the sole purpose of creating or redeeming instruments such as exchange-traded funds (''ETFs'').

The text of the proposed rule change is available on FINRA's Web site at *http://www.finra.org,* at the principal office of FINRA, and at the Commission's Public Reference Room.

II. Self-Regulatory Organization's Statement of the Purpose of, and Statutory Basis for, the Proposed Rule Change

In its filing with the Commission, FINRA included statements concerning the purpose of and basis for the proposed rule change and discussed any comments it received on the proposed rule change. The text of these statements may be examined at the places specified in Item IV below. FINRA has prepared summaries, set forth in sections A, B, and C below, of the most significant aspects of such statements.

A. Self-Regulatory Organization's Statement of the Purpose of, and the Statutory Basis for, the Proposed Rule Change

1. Purpose

Under the Rule 6700 Series (the TRACE rules), members are required to report transactions in debt securities that are TRACE–Eligible Securities as defined in Rule 6710(a) to FINRA unless they fall within an express exception listed in Rule 6730(e). Certain transactions and transfers are not reported to FINRA (*e.g.,* trades executed and reported through an exchange and transfers made pursuant to an asset purchase agreement that has been approved by a bankruptcy court). Members must have policies and procedures and internal controls in place to determine whether a transaction qualifies for an exception under the TRACE rules.

FINRA proposes to amend Rule 6730(e) to provide that transfers of TRACE–Eligible Securities for the sole purpose of creating or redeeming an instrument that evidences ownership or otherwise tracks the underlying securities transferred, such as an ETF, shall be excluded expressly from the TRACE reporting requirements. The proposed amendment to Rule 6730(e) is similar to an exclusion for such

transfers in equity securities incorporated in FINRA equity trade reporting rules in 2011.[4]

For example, a member broker-dealer that is an ''authorized participant'' of an ETF on behalf of a customer transfers TRACE–Eligible Securities to an ETF and in return receives ETF creation units. Under the proposed rule change, the transfers of the TRACE–Eligible Securities from the broker-dealer to the ETF would not be reported to TRACE.[5] (Similarly, the transfer of the ETF creation units to the broker-dealer would not be reported.)

In contrast, FINRA notes that purchases and sales of TRACE–Eligible Securities that are to be transferred for the purposes of creating or redeeming instruments such as ETFs (or a creation unit thereof) and subsequent purchases and sales of the ETF or a similar instrument in the secondary market are not subject to an exclusion. Such purchases and sales involving TRACE–Eligible Securities must be reported to FINRA in accordance with the Rule 6700 Series. Additionally, purchases and sales of the underlying TRACE–Eligible Securities in order to track the performance of an instrument such as an ETF, without actually creating the instrument, are reportable events and must be reported to TRACE.

As noted in Item 2 of this filing, FINRA has filed the proposed rule change for immediate effectiveness. The implementation date will be 30 days after the date of the filing.

2. Statutory Basis

FINRA believes that the proposed rule change is consistent with the provisions of Section 15A(b)(6) of the Act,[6] which requires, among other things, that FINRA rules must be designed to prevent fraudulent and manipulative acts and practices, to promote just and equitable principles of trade, and, in general, to protect investors and the public interest. FINRA believes that the proposed rule change will clarify members' obligations with respect to the reporting of transfers of TRACE–Eligible Securities to create or redeem instruments such as ETFs under the Rule 6700 Series. In addition, the proposed rule change is consistent with an exclusion for such transfers in equity securities incorporated in FINRA equity trade reporting rules in 2011.

B. Self-Regulatory Organization's Statement on Burden on Competition

FINRA does not believe that the proposed rule change will result in any burden on competition that is not necessary or appropriate in furtherance of the purposes of the Act.

Self-Regulatory Organization's Statement on Comments on the Proposed Rule Change Received From Members, Participants, or Others

Written comments were neither solicited nor received.

III. Date of Effectiveness of the Proposed Rule Change and Timing for Commission Action

Because the foregoing proposed rule change does not: (i) Significantly affect the protection of investors or the public interest; (ii) impose any significant burden on competition; and (iii) become operative for 30 days from the date on which it was filed, or such shorter time as the Commission may designate, it has become effective pursuant to Section 19(b)(3)(A) of the Act[7] and Rule 19b–4(f)(6) thereunder.[8]

At any time within 60 days of the filing of the proposed rule change, the Commission summarily may temporarily suspend such rule change if it appears to the Commission that such action is necessary or appropriate in the public interest, for the protection of investors, or otherwise in furtherance of the purposes of the Act. If the Commission takes such action, the Commission shall institute proceedings to determine whether the proposed rule should be approved or disapproved.

IV. Solicitation of Comments

Interested persons are invited to submit written data, views, and arguments concerning the foregoing, including whether the proposed rule change is consistent with the Act. Comments may be submitted by any of the following methods:

Electronic Comments

- Use the Commission's Internet comment form (*http://www.sec.gov/rules/sro.shtml*); or
- Send an email to *rule-comments@sec.gov.* Please include File Number SR–FINRA–2012–034 on the subject line.

Paper Comments

- Send paper comments in triplicate to Elizabeth M. Murphy, Secretary, Securities and Exchange Commission, 100 F Street NE., Washington, DC 20549–1090.

All submissions should refer to File Number SR–FINRA–2012–034. This file number should be included on the subject line if email is used. To help the Commission process and review your comments more efficiently, please use only one method. The Commission will post all comments on the Commission's Internet Web site (*http://www.sec.gov/rules/sro.shtml*). Copies of the submission, all subsequent amendments, all written statements with respect to the proposed rule change that are filed with the Commission, and all written communications relating to the proposed rule change between the Commission and any person, other than those that may be withheld from the public in accordance with the provisions of 5 U.S.C. 552, will be available for Web site viewing and printing in the Commission's Public Reference Room, 100 F Street NE., Washington, DC 20549, on official business days between the hours of 10:00 a.m. and 3:00 p.m. Copies of such filing also will be available for inspection and copying at the principal office of FINRA. All comments received will be posted without change; the Commission does not edit personal identifying information from submissions. You should submit only information that you wish to make available publicly. All submissions should refer to File Number SR–FINRA–2012–034 and should be submitted on or before August 16, 2012.

[4] *See* Securities Exchange Act Release No. 65025 (August 3, 2011), 76 FR 48937 (August 9, 2011) (SEC order approving SR–FINRA–2011–027, amending FINRA Rules 6282(i)(1), 6380A(e)(1), 6380B (e)(1) and 6622(e)(1)) and *Regulatory Notice* 11–40 (August 2011) (2011 Equity Trade Reporting Filing). The proposed rule change also codifies interpretive guidance that was published in 2003 regarding transfers of TRACE–Eligible Securities for such purposes. *See* Letter dated March 18, 2003, to Alice Yau, Vice President, Compliance, J.P. Morgan Securities from Sharon Zackula, Office of General Counsel, FINRA (f/k/a the National Association of Securities Dealers).

[5] FINRA notes that the proposed exception would apply irrespective of whether the member is acting as agent, principal or riskless principal in the creation process. Thus, if the broker-dealer that is an authorized participant in the above example is acting as riskless principal on behalf of its customer, the immediate subsequent transfer of the ETF creation units from the authorized participant to its customer also would not be reportable. Similarly, if a broker-dealer that is an authorized participant is acting as riskless principal on behalf of a customer that redeems an ETF creation unit, neither the transfer of the ETF creation unit from the broker-dealer to the ETF in return for TRACE–Eligible Securities, nor the immediate subsequent transfer of such TRACE–Eligible Securities to the customer would be reportable. This is consistent with interpretive guidance relating to the 2011 Equity Trade Reporting Filing. *See Regulatory Notice* 11–40.

[6] 15 U.S.C. 78*o*-3(b)(6).

[7] 15 U.S.C. 78s(b)(3)(A).

[8] 17 CFR 240.19b–4(f)(6).

For the Commission, by the Division of Trading and Markets, pursuant to delegated authority.[9]

Kevin M. O'Neill,

Deputy Secretary.

[FR Doc. 2012–17444 Filed 7–25–12; 8:45 am]

BILLING CODE 8011–01–P

SECURITIES AND EXCHANGE COMMISSION

[Release No. 34–67476; File No. SR–BYX–2012–014]

Self-Regulatory Organizations; BATS Y-Exchange, Inc.; Notice of Filing and Immediate Effectiveness of Proposed Rule Change by BATS Y-Exchange, Inc. To Amend BYX Rules Related to Telemarketing

July 20, 2012.

Pursuant to Section 19(b)(1) of the Securities Exchange Act of 1934 (the ''Act''),[1] and Rule 19b–4 thereunder,[2] notice is hereby given that on July 6, 2012, BATS Y–Exchange, Inc. (the ''Exchange'' or ''BYX'') filed with the Securities and Exchange Commission (''Commission'') the proposed rule change as described in Items I and II below, which Items have been prepared by the Exchange. The Exchange has designated this proposal as a ''non-controversial'' proposed rule change pursuant to Section 19(b)(3)(A) of the Act[3] and Rule 19b–4(f)(6)(iii) thereunder,[4] which renders it effective upon filing with the Commission. The Commission is publishing this notice to solicit comments on the proposed rule change from interested persons.

I. Self-Regulatory Organization's Statement of the Terms of Substance of the Proposed Rule Change

The Exchange proposes to adopt BYX Rule 3.23 ''Telemarketing'', to its rulebook to codify provisions that are substantially similar to Federal Trade Commission (''FTC'') rules that prohibit deceptive and other abusive telemarketing acts or practices.[5] The text of the proposed rule change is available at the Exchange's Web site at *http://www.batstrading.com,* at the principal office of the Exchange, on the Commission's Web site at *http://www.sec.gov,* and at the Commission's Public Reference Room.

II. Self-Regulatory Organization's Statement of the Purpose of, and Statutory Basis for, the Proposed Rule Change

In its filing with the Commission, the Exchange included statements concerning the purpose of and basis for the proposed rule change and discussed any comments it received on the proposed rule change. The text of these statements may be examined at the places specified in Item IV below. The Exchange has prepared summaries, set forth in Sections A, B, and C below, of the most significant parts of such statements.

A. Self-Regulatory Organization's Statement of the Purpose of, and Statutory Basis for, the Proposed Rule Change

1. Purpose

The Exchange proposes to add Rule 3.23, ''Telemarketing'', to its rulebook to codify provisions that are substantially similar to FTC rules that prohibit deceptive and other abusive telemarketing acts or practices. Rule 3.23 will require Members to, among other things, maintain do-not-call lists, limit the hours of telephone solicitations, and not use deceptive and abusive acts and practices in connection with telemarketing. The Commission directed BYX to enact these telemarketing rules in accordance with the Telemarketing Consumer Fraud and Abuse Prevention Act of 1994 (''Prevention Act'').[6] The Prevention Act requires the Commission to promulgate, or direct any national securities exchange or registered securities association to promulgate, rules substantially similar to the FTC rules[7] to prohibit deceptive and other abusive telemarketing acts or practices, unless the Commission determines either that the rules are not necessary or appropriate for the protection of investors or the maintenance of orderly markets, or that existing federal securities laws or Commission rules already provide for such protection.[8]

In 1997, the Commission determined that telemarketing rules promulgated and expected to be promulgated by self-regulatory organizations, together with the other rules of the self- regulatory organizations, the federal securities laws and the Commission's rules thereunder, satisfied the requirements of the Prevention Act because, at the time, the applicable provisions of those laws and rules were substantially similar to the FTC's telemarketing rules.[9] Since 1997, the FTC has amended its telemarketing rules in light of changing telemarketing practices and technology.[10]

As mentioned above, the Prevention Act requires the Commission to promulgate, or direct any national securities exchange or registered securities association to promulgate, rules substantially similar to the FTC rules to prohibit deceptive and other abusive telemarketing acts or practices.[11] In May 2011, Commission staff directed BYX to conduct a review of its telemarketing rule and propose rule amendments that provide protections that are at least as strong as those provided by the FTC's telemarketing rules.[12] Commission staff had concerns ''that the [Exchange] rules overall have not kept pace with the FTC's rules, and thus may no longer meet the standards of the [Prevention] Act.''[13]

The proposed rule change, as directed by the Commission staff, adopts provisions in Rule 3.23 that are substantially similar to the FTC's current rules that prohibit deceptive and other abusive telemarketing acts or practices as described below.[14]

Telemarketing Restrictions

The proposed rule change codifies the telemarketing restrictions in Rule 3.23(a) to provide that no Member or

[9] 17 CFR 200.30–3(a)(12).

[1] 15 U.S.C. 78s(b)(1).

[2] 17 CFR 240.19b–4.

[3] 15 U.S.C. 78s(b)(3)(A).

[4] 17 CFR 240.19b–4(f)(6)(iii).

[5] The proposed rule change is substantially similar in all material respects to Financial Industry Regulatory Authority, Inc. (''FINRA'') Rule 3230 (Telemarketing), which the Commission recently approved. *See* Securities Exchange Act Release No. 34–66279 (January 30, 2012), 77 FR 5611 (February 3, 2012) (SR–FINRA–2011–059) (approval order of proposed rule change to adopt telemarketing rule).

[6] 15 U.S.C. 6101–6108.

[7] 16 CFR 310.1–.9. The FTC adopted these rules under the Prevention Act in 1995. *See* Federal Trade Commission, *Telemarketing Sales Rule,* 60 FR 43842 (Aug. 23, 1995).

[8] 15 U.S.C. 6102.

[9] *See Telemarketing and Consumer Fraud and Abuse Prevention Act; Determination that No Additional Rulemaking Required,* Securities Exchange Act Release No. 38480 (Apr. 7, 1997), 62 FR 18666 (Apr. 16, 1996). The Commission also determined that some provisions of the FTC's telemarketing rules related to areas already extensively regulated by existing securities laws or activities not applicable to securities transactions *See id.*

[10] *See, e.g.,* Federal Trade Commission, *Telemarketing Sales Rule,* 73 FR 51164 (Aug. 29, 2008) (amendments to the *Telemarketing Sales Rule* relating to prerecorded messages and call abandonments); and Federal Trade Commission, *Telemarketing Sales Rule,* 68 FR 4580 (Jan. 29, 2003) (amendments to the *Telemarketing Sales Rule* establishing requirements for sellers and telemarketers to participate in the national do-not-call registry).

[11] *See supra* note 7.

[12] *See* Letter from Robert W. Cook, Director, Division of Trading and Markets, Securities and Exchange Commission, to Joe Ratterman, President and Chief Executive Officer, BATS Global Markets, Inc., dated May 12, 2011.

[13] *Id.*

[14] The proposed rule change is also substantially similar to FINRA Rule 3230. *See supra* note 3.

associated person of a Member [15] may make an outbound telephone call [16] to:

(1) Any person's residence at any time other than between 8 a.m. and 9 p.m. local time at the called person's locations;

(2) Any person that previously has stated that he or she does not wish to receive any outbound telephone calls made by or on behalf of the Member; or

(3) Any person who has registered his or her telephone number on the FTC's national do-not-call registry.

The proposed rule change is substantially similar to the FTC's provisions regarding abusive telemarketing acts or practices.[17] The FTC provided a discussion of the provision when it was adopted pursuant to the Prevention Act.[18]

Caller Disclosures

The proposed rule change codifies in Rule 3.23(b) that no Member or associated person of a Member shall make an outbound telephone call to any person without disclosing truthfully, promptly and in a clear and conspicuous manner to the called person the following information: (i) The identity of the caller and the Member; (ii) the telephone number or address at which the caller may be contacted; and (iii) that the purpose of the call is to solicit the purchase of securities or related services. The proposed rule change also provides that the telephone number that a caller provides to a person as the number at which the caller may be contacted may not be a 900 number or any other number for which charges exceed local or long-distance transmission charges.[19]

Exceptions

The proposed rule change adds Rule 3.23(c) to provide that the prohibition in paragraph (a)(1) [20] does not apply to outbound telephone calls by a Member or an associated person of a Member if:

(1) The Member has received that person's express prior written consent;

(2) The Member has an established business relationship [21] with the person; or

(3) The person is a broker or dealer.

Member's Firm-Specific Do-Not-Call List

The proposed rule change adds Rule 3.23(d) to provide that each Member must make and maintain a centralized list of persons who have informed the Member or any of its associated persons that they do not wish to receive outbound telephone calls. The proposed term ''outbound telephone call'' is defined substantially similar to the FTC's definition of that term.[22]

Proposed Rule 3.23(d)(2) adopts procedures that Members must institute to comply with Rule 3.23(a) and (b) prior to engaging in telemarketing. These procedures must meet the following minimum standards:

(1) Member must have a written policy for maintaining their firm-specific do-not-call lists.

(2) Personnel engaged in any aspect of telemarketing must be informed and trained in the existence and use of the Member's firm-specific do-not-call list.

(3) If a Member receives a request from a person not to receive calls from that Member, the Member must record the request and place the person's name, if provided, and telephone number on its firm-specific do-not-call list at the time the request is made.[23]

(4) Members or associated persons of Members making an outbound telephone call must make the caller disclosures set forth in Rule 3.23(b).

(5) In the absence of a specific request by the person to the contrary, a person's do- not-call request will apply to the Member making the call, and will not apply to affiliated entities unless the consumer reasonably would expect them to be included given the identification of the call and the product being advertised.

(6) A Member making outbound telephone calls must maintain a record of a person's request not to receive further calls.

Inclusion of this requirement to adopt these procedures will not create any new obligations on Members, as they are already subject to identical provisions under Federal Communications Commission (''FCC'') telemarketing regulations.[24]

[15] An ''associated person of a Member'' is any partner, officer, director, or branch manager of a Member (or person occupying a similar status or performing similar functions), any person directly or indirectly controlling, controlled by, or under common control with such Member, or any employee of such Member, except that any person associated with a Member whose functions are solely clerical or ministerial shall not be included in the meaning of such term. *See* Rule 1.5(q).

[16] An ''outbound telephone call'' is a telephone call initiated by a telemarketer to induce the purchase of goods or services or to solicit a charitable contribution from a donor. A ''telemarketer'' is any person who, in connection with telemarketing, initiates or receives telephone calls to or from a customer or donor. A ''customer'' is any person who is or may be required to pay for goods or services through telemarketing. A ''donor'' means any person solicited to make a charitable contribution. A ''person'' is any individual, group, unincorporated association, limited or general partnership, corporation, or other business entity. ''Telemarketing'' means consisting of or relating to a plan, program, or campaign involving at least one outbound telephone call, for example cold-calling. The term does not include the solicitation of sales through the mailing of written marketing materials, when the person making the solicitation does not solicit customers by telephone but only receives calls initiated by customers in response to the marketing materials and during those calls takes orders only without further solicitation. For purposes of the previous sentence, the term ''further solicitation'' does not include providing the customer with information about, or attempting to sell, anything promoted in the same marketing materials that prompted the customer's call. A ''charitable contribution'' means any donation or gift of money or any other thing of value, for example a transfer to a pooled income fund. *See* proposed Rule 3.23(n)(3), (11), (16), (17), (20), and (21); *see also* FINRA Rule 3230(m)(11), (14), (16), (17), and (20); and 16 CFR 310.2(f), (l), (n), (v), (w), (cc), and (dd).

[17] *See* 16 CFR 310.4(b)(1)(iii)(A) and (B) and (c); *see also* FINRA Rule 3230(a). *See* proposed Rule 3.23(n)(16) and (21) and *supra* note 15.

[18] *See* Federal Trade Commission, *Telemarketing Sales Rule,* 68 FR 4580 (Jan. 29, 2003) at 4628; and Federal Trade Commission, *Telemarketing Sales Rule,* 60 FR 43842 (Aug. 23, 1995) at 43855.

[19] *See* proposed Rule 3.23(b); *see also* FINRA Rule 3230(d)(4). The proposed rule change is substantially similar to the Federal Communications Commission's regulations regarding call disclosures. *See* 47 CFR 64.1200(d)(4).

[20] The Exchange believes that even if a Member satisfies the exception in paragraph (c), the Member should still make the caller disclosures required by paragraph (b) to the called person to ensure that the called person receives sufficient information regarding the purpose of the call.

[21] An ''established business relationship'' is a relationship between a Member and a person if (a) the person has made a financial transaction or has a security position, a money balance, or account activity with the Member or at a clearing firm that provides clearing services to the Member within the 18 months immediately preceding the date of an outbound telephone call; (b) the Member is the broker-dealer of record for an account of the person within the 18 months immediately preceding the date of an outbound telephone call; or (c) the person has contacted the Member to inquire about a product or service offered by the Member within the three months immediately preceding the date of an outbound telephone call. A person's established business relationship with a Member does not extend to the Member's affiliated entities unless the person would reasonably expect them to be included. Similarly, a person's established business relationship with a Member's affiliate does not extend to the Member unless the person would reasonably expect the Member to be included. The term ''account activity'' includes, but is not limited to, purchases, sales, interest credits or debits, charges or credits, dividend payments, transfer activity, securities receipts or deliveries, and/or journal entries relating to securities or funds in the possession or control of the Member. The term ''broker- dealer of record'' refers to the broker or dealer identified on a customer's account application for accounts held directly at a mutual fund or variable insurance product issuer. *See* proposed Rule 3.23(n)(1), (4), and (12); *see also* 16 CFR 310.2(o) and FINRA Rule 3230(m)(1), (4), and (12).

[22] *See* 16 CFR 310.4(b)(1)(iii)(A) and *supra* note 15; *see also* FINRA Rule 3230(a)(2).

[23] Members must honor a person's do-not-call request within a reasonable time from the date the request is made, which may not exceed 30 days from the date of the request. If these requests are recorded or maintained by a party other than the Member on whose behalf the outbound telephone call is made, the Member on whose behalf the outbound telephone call is made will still be liable for any failures to honor the do-not-call request.

[24] *See* 47 CFR 64.1200(d); *see also* FINRA Rule 3230(d).

Do-Not-Call Safe Harbors

Proposed Rule 3.23(e) provides for certain exceptions to the telemarketing restriction set forth in proposed Rule 3.23(a)(3), which prohibits outbound telephone calls to persons on the FTC's national do-not-call registry. First, proposed Rule 3.23(e)(1) provides that a Member or associated person of a Member making outbound telephone calls will not be liable for violating proposed Rule 3.23(a)(3) if:

(1) The Member has an established business relationship with the called person; however, a person's request to be placed on the Member's firm-specific do-not- call list terminates the established business relationship exception to the national do-not-call registry provision for that Member even if the person continues to do business with the Member;

(2) The Member has obtained the person's prior express written consent, which must be clearly evidenced by a signed, written agreement (which may be obtained electronically under the E-Sign Act [25]) between the person and the Member that states that the person agrees to be contacted by the Member and includes the telephone number to which the calls may be placed; or

(3) The Member or associated person of a Member making the call has a personal relationship [26] with the called person.

The proposed rule change is substantially similar to the FTC's provision regarding an exception to the prohibition on making outbound telephone calls to persons on the FTC's do-not- call registry.[27] The FTC provided a discussion of the provision when it was adopted pursuant to the Prevention Act.[28]

Second, proposed Rule 3.23(e)(2) provides that a Member or associated person of a Member making outbound telephone calls will not be liable for violating proposed Rule 3.23(a)(3) if the Member or associated person of a Member demonstrates that the violation is the result of an error and that as part of the Member's routine business practice:

(1) The Member has established and implemented written procedures to comply with Rule 3.23(a) and (b);

(2) The Member has trained its personnel, and any entity assisting in its compliance, in the procedures established pursuant to the preceding clause;

(3) The Member has maintained and recorded a list of telephone numbers that it may not contact in compliance with Rule 3.23(d); and

(4) The Member uses a process to prevent outbound telephone calls to any telephone number on the Member's firm-specific do-not-call list or the national do-not-call registry, employing a version of the national do-not-call registry obtained from the FTC no more than 31 days prior to the date any call is made, and maintains records documenting this process.

The proposed rule change is substantially similar to the FTC's safe harbor to the prohibition on making outbound telephone calls to persons on a firm-specific do-not-call list or on the FTC's national do-not-call registry.[29] The FTC provided a discussion of the provision when it was adopted pursuant to the Prevention Act.[30]

Wireless Communications

Proposed Rule 3.23(f) clarifies that the provisions set forth in Rule 3.23 are applicable to Members and associated persons of Members making outbound telephone calls to wireless telephone numbers.[31]

Outsourcing Telemarketing

Proposed Rule 3.23(g) states that if a Member uses another entity to perform telemarketing services on its behalf, the Member remains responsible for ensuring compliance with Rule 3.23. The proposed rule change also provides that an entity or person to which a Member outsources its telemarketing services must be appropriately registered or licensed, where required.[32]

Billing Information

Proposed Rule 3.23(h) provides that, for any telemarketing transaction, no Member or associated person of a Member may submit billing information [33] for payment without the express informed consent of the customer. Proposed Rule 3.23(h) requires that each Member or associated person of a Member must obtain the express informed consent of the person to be charged and to be charged using the identified account.

If the telemarketing transaction involves pre-acquired account information [34] and a free-to-pay conversion [35] feature, the Member or associated person of a Member must:

(1) Obtain from the customer, at a minimum, the last four digits of the account number to be charged;

(2) Obtain from the customer an express agreement to be charged and to be charged using the identified account number; and

(3) Make and maintain an audio recording of the entire telemarketing transaction.

For any other telemarketing transaction involving preacquired account information, the Member or associated person of a Member must:

(1) Identify the account to be charged with sufficient specificity for the customer to understand what account will be charged; and

(2) Obtain from the customer an express agreement to be charged and to be charged using the identified account number.

The proposed rule change is substantially similar to the FTC's provision regarding the submission of billing information.[36] The FTC provided a discussion of the provision when it was adopted pursuant to the Prevention Act.[37]

Caller Identification Information

Proposed Rule 3.23(i) provides that Members that engage in telemarketing must transmit caller identification information [38] and are explicitly prohibited from blocking caller identification information. The

[25] 15 U.S.C. 7001 *et seq.*

[26] The term ''personal relationship'' means any family member, friend, or acquaintance of the person making an outbound telephone call. *See* proposed Rule 3.23(n)(18); *see also* FINRA Rule 3230(m)(18).

[27] *See* 16 CFR 310.4(b)(1)(iii)(B); *see also* FINRA Rule 3230(b).

[28] *See* Federal Trade Commission, *Telemarketing Sales Rule,* 68 FR 4580 (Jan. 29, 2003) at 4628; Federal Trade Commission, *Telemarketing Sales Rule,* 60 FR 43842 (Aug. 23, 1995) at 43854.

[29] *See* 16 CFR 310.4(b)(3); *see also* FINRA Rule 3230(c).

[30] *See* Federal Trade Commission, *Telemarketing Sales Rule,* 68 FR 4580 (Jan. 29, 2003) at 4628; and Federal Trade Commission, *Telemarketing Sales Rule,* 60 FR 43842 (Aug. 23, 1995) at 43855.

[31] *See also* FINRA Rule 3230(e).

[32] *See also* FINRA Rule 3230(f).

[33] The term ''billing information'' means any data that enables any person to access a customer's or donor's account, such as a credit or debit card number, a brokerage, checking, or savings account number, or a mortgage loan account number. *See* proposed Rule 3.23(n)(3).

[34] The term ''preacquired account information'' means any information that enables a Member or associated person of a Member to cause a charge to be placed against a customer's or donor's account without obtaining the account number directly from the customer or donor during the telemarketing transaction pursuant to which the account will be charged. *See* proposed Rule 3.23(n)(19).

[35] The term ''free-to-pay conversion'' means, in an offer or agreement to sell or provide any goods or services, a provision under which a customer receives a product or service for free for an initial period and will incur an obligation to pay for the product or service if he or she does not take affirmative action to cancel before the end of that period. *See* proposed Rule 3.23(n)(13).

[36] *See* 16 CFR 310.4(a)(7); *see also* FINRA Rule 3230(i).

[37] *See* Federal Trade Commission, *Telemarketing Sales Rule,* 68 FR 4580 (Jan. 29, 2003) at 4616.

[38] Caller identification information includes the telephone number and, when made available by the Member's telephone carrier, the name of the Member.

telephone number provided must permit any person to make a do-not-call request during normal business hours. These provisions are similar to the caller identification provision in the FTC rules.[39] Inclusion of these caller identification provisions in this proposed rule change will not create any new obligations on Members, as they are already subject to identical provisions under FCC telemarketing regulations.[40]

Unencrypted Consumer Account Numbers

Proposed Rule 3.23(j) prohibits a Member or associated person of a Member from disclosing or receiving, for consideration, unencrypted consumer account numbers for use in telemarketing. The proposed rule change is substantially similar to the FTC's provision regarding unencrypted consumer account numbers.[41] The FTC provided a discussion of the provision when it was adopted pursuant to the Prevention Act.[42] Additionally, the proposed rule change defines ''unencrypted'' as not only complete, visible account numbers, whether provided in lists or singly, but also encrypted information with a key to its decryption. The proposed definition is substantially similar to the view taken by the FTC.[43]

Abandoned Calls

Proposed Rule 3.23(k) prohibits a Member or associated person of a Member from abandoning[44] any outbound telephone call. The abandoned calls prohibition is subject to a ''safe harbor'' under proposed Rule 3.23(k)(2) that requires a Member or associated person of a Member:

(1) To employ technology that ensures abandonment of no more than three percent of all calls answered by a person, measured over the duration of a single calling campaign, if less than 30 days, or separately over each successive 30-day period or portion thereof that the campaign continues;

(2) For each outbound telephone call placed, to allow the telephone to ring for at least 15 seconds or four rings before disconnecting an unanswered call;

(3) Whenever a Member or associated person of a Member is not available to speak with the person answering the outbound telephone call within two seconds after the person's completed greeting, promptly to play a prerecorded message stating the name and telephone number of the Member or associated person of a Member on whose behalf the call was placed; and

(4) To maintain records documenting compliance with the ''safe harbor.''

The proposed rule change is substantially similar to the FTC's provisions regarding abandoned calls.[45] The FTC provided a discussion of the provisions when they are adopted pursuant to the Prevention Act.[46]

Prerecorded Messages

Proposed Rule 3.23(l) prohibits a Member or associated person of a Member from initiating any outbound telephone call that delivers a prerecorded message without a person's express written agreement[47] to receive such calls. The proposed rule change also requires that all prerecorded outbound telephone calls provide specified opt-out mechanisms so that a person can opt out of future calls. The prohibition does not apply to a prerecorded message permitted for compliance with the ''safe harbor'' for abandoned calls under proposed Rule 3.23(k)(2). The proposed rule change is substantially similar to the FTC's provisions regarding prerecorded messages.[48] The FTC provided a discussion of the provisions when they were adopted pursuant to the Prevention Act.[49]

Credit Card Laundering

Proposed Rule 3.23(m) prohibits credit card laundering, the practice of depositing into the credit card system[50] a sales draft that is not the result of a credit card transaction between the cardholder[51] and the Member. Except as expressly permitted, the proposed rule change prohibits a Member or associated person of a Member from:

(1) Presenting to or depositing into the credit card system for payment, a credit card sales draft[52] generated by a telemarketing transaction that is not the result of a telemarketing credit card transaction between the cardholder and the Member;

(2) Employing, soliciting, or otherwise causing a merchant,[53] or an employee, representative or agent of the merchant to present to or to deposit into the credit card system for payment, a credit card sales draft generated by a telemarketing transaction that is not the result of a telemarketing credit card transaction between the cardholder and the Member; or

(3) Obtaining access to the credit card system through the use of a business relationship or an affiliation with a merchant, when such access is not authorized by the merchant agreement[54] or the applicable credit card system.

The proposed rule change is substantially similar to the FTC's provision regarding credit card laundering.[55] The FTC provided a discussion of the provisions when they

[39] *See* 16 CFR 310.4(a)(8); *see also* FINRA Rule 3230(g).

[40] *See* 47 CFR 64.1601(e).

[41] *See* 16 CFR 310.4(a)(6); *see also* FINRA Rule 3230(h).

[42] *See* Federal Trade Commission, *Telemarketing Sales Rule,* 68 FR 4580 (Jan. 29, 2003) at 4615.

[43] *See id.* at 4616.

[44] An outbound telephone call is ''abandoned'' if the called person answers it and the call is not connected to a Member or associated person of a Member within two seconds of the called person's completed greeting.

[45] *See* 16 CFR 310.4(b)(1)(iv) and (b)(4); *see also* FINRA Rule 3230(j).

[46] *See* Federal Trade Commission, *Telemarketing Sales Rule,* 68 FR 4580 (Jan. 29, 2003) at 4641.

[47] The express written agreement must: (a) Have been obtained only after a clear and conspicuous disclosure that the purpose of the agreement is to authorize the Member to place prerecorded calls to such person; (b) have been obtained without requiring, directly or indirectly, that the agreement be executed as a condition of purchasing any good or service; (c) evidence the willingness of the called person to receive calls that deliver prerecorded messages by or on behalf of the Member; and (d) include the person's telephone number and signature (which may be obtained electronically under the E-Sign Act).

[48] *See* 16 CFR 310.4(b)(1)(v); *see also* FINRA Rule 3230(k).

[49] *See* Federal Trade Commission, *Telemarketing Sales Rule,* 73 FR 51164 (Aug. 29, 2008) at 51165.

[50] The term ''credit card system'' means any method or procedure used to process credit card transactions involving credit cards issued or licensed by the operator of that system. The term ''credit card'' means any card, plate, coupon book, or other credit device existing for the purpose of obtaining money, property, labor, or services on credit. The term ''credit'' means the right granted by a creditor to a debtor to defer payment of debt or to incur debt and defer its payment. *See* proposed Rule 3.23(n)(7), (8), and (10).

[51] The term ''cardholder'' means a person to whom a credit card is issued or who is authorized to use a credit card on behalf of or in addition to the person to whom the credit card is issued. *See* proposed Rule 3.23(n)(6).

[52] The term ''credit card sales draft'' means any record or evidence of a credit card transaction. *See* proposed Rule 3.23(n)(9).

[53] The term ''merchant'' means a person who is authorized under a written contract with an acquirer to honor or accept credit cards, or to transmit or process for payment credit card payments, for the purchase of goods or services or a charitable contribution. The term ''acquirer'' means a business organization, financial institution, or an agent of a business organization or financial institution that has authority from an organization that operates or licenses a credit card system to authorize merchants to accept, transmit, or process payment by credit card through the credit card system for money, goods or services, or anything else of value. *See* proposed Rule 3.23(n)(2) and (14).

[54] The term ''merchant agreement'' means a written contract between a merchant and an acquirer to honor or accept credit cards, or to transmit or process for payment credit card payments, for the purchase of goods or services or a charitable contribution. *See* proposed Rule 3.23(n)(15).

[55] *See* 16 CFR 310.3(c); *see also* FINRA Rule 3230(l).

were adopted pursuant to the Prevention Act.[56]

Definitions

Proposed Rule 3.23(n) adopts the following definitions, which are substantially similar to the FTC's definitions of these terms: ''acquirer,'' ''billing information,'' ''caller identification service,'' ''cardholder,'' ''charitable contribution,'' ''credit,'' ''credit card,'' ''credit card sales draft,'' ''credit card system,'' ''customer,'' ''donor,'' ''established business relationship,'' ''free-to-pay conversion,'' ''merchant,'' ''merchant agreement,'' ''outbound telephone call,'' ''person,'' ''pre-acquired account information,'' ''telemarketer,'' and ''telemarketing.'' [57] The FTC provided a discussion of each definition when they were adopted pursuant to the Prevention Act.[58]

State and Federal Laws

Proposed Rule 3.23, Interpretation and Policy .01 [59] reminds Members and associated persons of Members that engage in telemarketing that they also are subject to the requirements of relevant state and federal laws and rules, including the Prevention Act, the Telephone Consumer Protection Act of 1991,[60] and the rules of the FCC relating to telemarketing practices and the rights of telephone consumers.[61]

Announcement in Regulatory Circular

The Exchange will announce the implementation date of the proposed rule change in a Regulatory Notice to be published no later than 90 days following the effective date. The implementation date will be no later than 180 days following the effective date.

2. Statutory Basis

The Exchange believes that the proposed rule change is consistent with the Act and the rules and regulations thereunder applicable to the Exchange and, in particular, the requirements of Section 6(b) of the Act.[62] Specifically, the Exchange believes the proposed rule change is consistent with the Section 6(b)(5) [63] requirements that the rules of an exchange be designed to promote just and equitable principles of trade, to prevent fraudulent and manipulative acts, to remove impediments to and to perfect the mechanism for a free and open market and a national market system, and, in general, to protect investors and the public interest. In particular, the proposed rule change will prevent fraudulent and manipulative acts and protect investors and the public interest by continuing to prohibit Members from engaging in deceptive and other abusive telemarketing acts or practices. Additionally, the proposed rule change removes impediments to and perfects the mechanism for a free and open market and a national market system, because it provides consistency among telemarketing rules of national securities exchanges and FINRA, therefore making it easier for investors to comply with these rules.

B. Self-Regulatory Organization's Statement on Burden on Competition

The Exchange does not believe that the proposed rule change imposes any burden on competition.

C. Self-Regulatory Organization's Statement on Comments on the Proposed Rule Change Received From Members, Participants or Others

The Exchange has neither solicited nor received written comments on the proposed rule change.

III. Date of Effectiveness of the Proposed Rule Changes and Timing for Commission Action

Because the foregoing proposed rule change does not: (i) Significantly affect the protection of investors or the public interest; (ii) impose any significant burden on competition; and (iii) become operative for 30 days from the date on which it was filed, or such shorter time as the Commission may designate, it has become effective pursuant to Section 19(b)(3)(A) of the Act [64] and Rule 19b–4(f)(6)(iii) thereunder.[65]

For the foregoing reasons, this rule filing qualifies as a ''non-controversial'' rule change under Rule 19b–4(f)(6), which renders the proposed rule change effective upon filing with the Commission. The Exchange has requested that the Commission waive the 30-day operative delay period after which a proposed rule change under Rule 19b–4(f)(6) becomes effective. The Commission believes that waiving the 30-day operative delay is consistent with the protection of investors and the public interest because such waiver will afford Exchange members the benefit of the proposal—the prohibition of deceptive and other abusive telemarketing acts or practices—without unnecessary delay. Such waiver will also allow the Exchange to comply with the Commission's directive and implement uniform telemarketing rules across self-regulatory organizations, creating consistency among these rules for investors, as soon as possible. For these reasons, the Commission designates the proposed rule change as operative under upon filing.[66]

At any time within 60 days of the filing of the proposed rule change, the Commission summarily may temporarily suspend such rule change if it appears to the Commission that such action is necessary or appropriate in the public interest, for the protection of investors, or otherwise in furtherance of the purposes of the Act.

IV. Solicitation of Comments

Interested persons are invited to submit written data, views and arguments concerning the foregoing, including whether the proposal is consistent with the Act. Comments may be submitted by any of the following methods:

Electronic Comments

- Use the Commission's Internet comment form (*http://www.sec.gov/rules/sro.shtml*); or
- Send an email to *rule-comments@sec.gov.* Please include File No. SR–BYX–2012–014 on the subject line.

Paper Comments

- Send paper comments in triplicate to Elizabeth M. Murphy, Secretary, Securities and Exchange Commission, 100 F Street NE., Washington, DC 20549–1090.

All submissions should refer to File No. SR–BYX–2012–014. This file number

[56] *See* Federal Trade Commission, *Telemarketing Sales Rule,* 60 FR 43842 (Aug. 23, 1995) at 43852.

[57] *See* proposed Rule 3.23(n)(2), (3), (5), (6), (7), (8), (9), (10), (11), (12), (13), (14), (15), (16), (17), (19), (20), and (21); and 16 CFR 310.2(a), (c), (d), (e), (f), (h), (i), (j), (k), (l), (n), (o), (p), (s), (t), (v), (w), (x), (cc), and (dd); *see also* FINRA Rule 3230(m)(2), (3), (5), (6), (7), (8), (9), (10), (11), (12), (13), (14), (15), (16), (17), (19), and (20). The proposed rule change also adopts definitions of ''account activity,'' ''broker-dealer of record,'' and ''personal relationship'' that are substantially similar FINRA's definitions of these terms. *See* proposed Rule 3.23(n)(1), (4), and (18) and FINRA Rule 3230(m)(1), (4), and (18); *see also* 47 CFR 64.1200(f)(14) (FCC's definition of ''personal relationship'').

[58] *See* Federal Trade Commission, *Telemarketing Sales Rule,* 60 FR 43842 (Aug. 23, 1995) at 43843; and Federal Trade Commission, *Telemarketing Sales Rule,* 68 FR 4580 (Jan. 29, 2003) at 4587.

[59] *See also* FINRA Rule 3230, Supplementary Material .01, *Compliance with Other Requirements.*

[60] *See* 47 U.S.C. 227.

[61] *See* 47 CFR 64.1200.

[62] 15 U.S.C. 78f(b).

[63] 15 U.S.C. 78f(b)(5).

[64] 15 U.S.C. 78s(b)(3)(A).

[65] 17 CFR 240.19b–4(f)(6).

[66] For purposes only of waiving the 30-day operative delay, the Commission has considered the proposed rule's impact on efficiency, competition, and capital formation. *See* 15 U.S.C. 78c(f).

should be included on the subject line if email is used. To help the Commission process and review your comments more efficiently, please use only one method. The Commission will post all comments on the Commission's Internet Web site (*http://www.sec.gov/rules/sro.shtml*). Copies of the submission, all subsequent amendments, all written statements with respect to the proposed rule change that are filed with the Commission, and all written communications relating to the proposed rule change between the Commission and any person, other than those that may be withheld from the public in accordance with the provisions of 5 U.S.C. 552, will be available for Web site viewing and printing in the Commission's Public Reference Room, 100 F Street NE., Washington, DC 20549, on official business days between the hours of 10:00 a.m. and 3:00 p.m. Copies of such filing also will be available for inspection and copying at the principal office of the Exchange. All comments received will be posted without change; the Commission does not edit personal identifying information from submissions. You should submit only information that you wish to make available publicly. All submissions should refer to File No. SR–BYX–2012–014 and should be submitted on or before August 16, 2012.

For the Commission, by the Division of Trading and Markets, pursuant to delegated authority.[67]

Kevin M. O'Neill,

Deputy Secretary.

[FR Doc. 2012–18217 Filed 7–25–12; 8:45 am]

BILLING CODE 8011–01–P

[67] 17 CFR 200.30–3(a)(12).

SECURITIES AND EXCHANGE COMMISSION

[Release No. 34–67477; File No. SR–BATS–2012–028]

Self-Regulatory Organizations; BATS Exchange, Inc.; Notice of Filing and Immediate Effectiveness of Proposed Rule Change by BATS Exchange, Inc. To Amend BATS Rules Related to Telemarketing

July 20, 2012.

Pursuant to Section 19(b)(1) of the Securities Exchange Act of 1934 (the ''Act''),[1] and Rule 19b–4 thereunder,[2] notice is hereby given that on July 6, 2012, BATS Exchange, Inc. (the ''Exchange'' or ''BATS'') filed with the Securities and Exchange Commission (''Commission'') the proposed rule change as described in Items I and II below, which Items have been prepared by the Exchange. The Exchange has designated this proposal as a ''non-controversial'' proposed rule change pursuant to Section 19(b)(3)(A) of the Act[3] and Rule 19b–4(f)(6)(iii) thereunder,[4] which renders it effective upon filing with the Commission. The Commission is publishing this notice to solicit comments on the proposed rule change from interested persons.

[1] 15 U.S.C. 78s(b)(1).

[2] 17 CFR 240.19b–4.

I. Self-Regulatory Organization's Statement of the Terms of Substance of the Proposed Rule Change

The Exchange proposes to adopt BATS Rule 3.23 ''Telemarketing'', to its rulebook to codify provisions that are substantially similar to Federal Trade Commission (''FTC'') rules that prohibit deceptive and other abusive telemarketing acts or practices.[5] The text of the proposed rule change is available at the Exchange's Web site at *http://www.batstrading.com,* at the principal office of the Exchange, on the Commission's Web site at *http://www.sec.gov,* and at the Commission's Public Reference Room.

II. Self-Regulatory Organization's Statement of the Purpose of, and Statutory Basis for, the Proposed Rule Change

In its filing with the Commission, the Exchange included statements concerning the purpose of and basis for the proposed rule change and discussed any comments it received on the proposed rule change. The text of these statements may be examined at the places specified in Item IV below. The Exchange has prepared summaries, set forth in Sections A, B, and C below, of the most significant parts of such statements.

A. Self-Regulatory Organization's Statement of the Purpose of, and Statutory Basis for, the Proposed Rule Change

1. Purpose

The Exchange proposes to add Rule 3.23, ''Telemarketing'', to its rulebook to codify provisions that are substantially similar to FTC rules that prohibit deceptive and other abusive telemarketing acts or practices. Rule 3.23 will require Members to, among other things, maintain do-not-call lists, limit the hours of telephone solicitations, and not use deceptive and abusive acts and practices in connection with telemarketing. The Commission directed BATS to enact these telemarketing rules in accordance with the Telemarketing Consumer Fraud and Abuse Prevention Act of 1994 (''Prevention Act'').[6] The Prevention Act requires the Commission to promulgate, or direct any national securities exchange or registered securities association to promulgate, rules substantially similar to the FTC rules[7] to prohibit deceptive and other abusive telemarketing acts or practices, unless the Commission determines either that the rules are not necessary or appropriate for the protection of investors or the maintenance of orderly markets, or that existing federal securities laws or Commission rules already provide for such protection.[8]

In 1997, the Commission determined that telemarketing rules promulgated and expected to be promulgated by self-regulatory organizations, together with the other rules of the self-regulatory organizations, the federal securities laws and the Commission's rules thereunder, satisfied the requirements of the Prevention Act because, at the time, the applicable provisions of those laws and rules were substantially similar to the FTC's telemarketing rules.[9] Since 1997, the FTC has amended its telemarketing rules in light of changing telemarketing practices and technology.[10]

As mentioned above, the Prevention Act requires the Commission to promulgate, or direct any national securities exchange or registered

[3] 15 U.S.C. 78s(b)(3)(A).

[4] 17 CFR 240.19b–4(f)(6)(iii).

[5] The proposed rule change is substantially similar in all material respects to Financial Industry Regulatory Authority, Inc. (''FINRA'') Rule 3230 (Telemarketing), which the Commission recently approved. *See* Securities Exchange Act Release No. 34–66279 (January 30, 2012), 77 FR 5611 (February 3, 2012) (SR–FINRA–2011–059) (approval order of proposed rule change to adopt telemarketing rule).

[6] 15 U.S.C. 6101–6108.

[7] 16 CFR 310.1–.9. The FTC adopted these rules under the Prevention Act in 1995. *See* Federal Trade Commission, *Telemarketing Sales Rule,* 60 FR 43842 (Aug. 23, 1995).

[8] 15 U.S.C. 6102.

[9] *See Telemarketing and Consumer Fraud and Abuse Prevention Act; Determination that No Additional Rulemaking Required,* Securities Exchange Act Release No. 38480 (Apr.7, 1997), 62 FR 18666 (Apr. 16, 1996). The Commission also determined that some provisions of the FTC's telemarketing rules related to areas already extensively regulated by existing securities laws or activities not applicable to securities transactions *See id.*

[10] *See, e.g.,* Federal Trade Commission, *Telemarketing Sales Rule,* 73 FR 51164 (Aug. 29, 2008) (amendments to the *Telemarketing Sales Rule* relating to prerecorded messages and call abandonments); and Federal Trade Commission, *Telemarketing Sales Rule,* 68 FR 4580 (Jan. 29, 2003) (amendments to the *Telemarketing Sales Rule* establishing requirements for sellers and telemarketers to participate in the national do-not-call registry).

securities association to promulgate, rules substantially similar to the FTC rules to prohibit deceptive and other abusive telemarketing acts or practices.[11] In May 2011, Commission staff directed BATS to conduct a review of its telemarketing rule and propose rule amendments that provide protections that are at least as strong as those provided by the FTC's telemarketing rules.[12] Commission staff had concerns ''that the [Exchange] rules overall have not kept pace with the FTC's rules, and thus may no longer meet the standards of the [Prevention] Act.'' [13]

The proposed rule change, as directed by the Commission staff, adopts provisions in Rule 3.23 that are substantially similar to the FTC's current rules that prohibit deceptive and other abusive telemarketing acts or practices as described below.[14]

Telemarketing Restrictions

The proposed rule change codifies the telemarketing restrictions in Rule 3.23(a) to provide that no Member or associated person of a Member [15] may make an outbound telephone call [16] to:

(1) Any person's residence at any time other than between 8 a.m. and 9 p.m. local time at the called person's locations;

(2) Any person that previously has stated that he or she does not wish to receive any outbound telephone calls made by or on behalf of the Member; or

(3) Any person who has registered his or her telephone number on the FTC's national do-not-call registry.

The proposed rule change is substantially similar to the FTC's provisions regarding abusive telemarketing acts or practices.[17] The FTC provided a discussion of the provision when it was adopted pursuant to the Prevention Act.[18]

Caller Disclosures

The proposed rule change codifies in Rule 3.23(b) that no Member or associated person of a Member shall make an outbound telephone call to any person without disclosing truthfully, promptly and in a clear and conspicuous manner to the called person the following information: (i) The identity of the caller and the Member; (ii) the telephone number or address at which the caller may be contacted; and (iii) that the purpose of the call is to solicit the purchase of securities or related services. The proposed rule change also provides that the telephone number that a caller provides to a person as the number at which the caller may be contacted may not be a 900 number or any other number for which charges exceed local or long-distance transmission charges.[19]

Exceptions

The proposed rule change adds Rule 3.23(c) to provide that the prohibition in paragraph (a)(1) [20] does not apply to outbound telephone calls by a Member or an associated person of a Member if:

(1) The Member has received that person's express prior written consent;

(2) The Member has an established business relationship [21] with the person; or

(3) The person is a broker or dealer.

Member's Firm-Specific Do-Not-Call List

The proposed rule change adds Rule 3.23(d) to provide that each Member must make and maintain a centralized list of persons who have informed the Member or any of its associated persons that they do not wish to receive outbound telephone calls. The proposed term ''outbound telephone call'' is defined substantially similar to the FTC's definition of that term.[22]

Proposed Rule 3.23(d)(2) adopts procedures that Members must institute to comply with Rule 3.23(a) and (b) prior to engaging in telemarketing. These procedures must meet the following minimum standards:

(1) Member must have a written policy for maintaining their firm-specific do-not-call lists.

(2) Personnel engaged in any aspect of telemarketing must be informed and trained in the existence and use of the Member's firm-specific do-not-call list.

(3) If a Member receives a request from a person not to receive calls from that Member, the Member must record the request and place the person's name, if provided, and telephone number on

[11] *See supra* note 7.

[12] *See* Letter from Robert W. Cook, Director, Division of Trading and Markets, Securities and Exchange Commission, to Joe Ratterman, President and Chief Executive Officer, BATS Global Markets, Inc., dated May 12, 2011.

[13] *Id.*

[14] The proposed rule change is also substantially similar to FINRA Rule 3230. *See supra* note 3.

[15] An ''associated person of a Member'' is any partner, officer, director, or branch manager of a Member (or person occupying a similar status or performing similar functions), any person directly or indirectly controlling, controlled by, or under common control with such Member, or any employee of such Member, except that any person associated with a Member whose functions are solely clerical or ministerial shall not be included in the meaning of such term. *See* Rule 1.5(q).

[16] An ''outbound telephone call'' is a telephone call initiated by a telemarketer to induce the purchase of goods or services or to solicit a charitable contribution from a donor. A ''telemarketer'' is any person who, in connection with telemarketing, initiates or receives telephone calls to or from a customer or donor. A ''customer'' is any person who is or may be required to pay for goods or services through telemarketing. A ''donor'' means any person solicited to make a charitable contribution. A ''person'' is any individual, group, unincorporated association, limited or general partnership, corporation, or other business entity. ''Telemarketing'' means consisting of or relating to a plan, program, or campaign involving at least one outbound telephone call, for example cold-calling. The term does not include the solicitation of sales through the mailing of written marketing materials, when the person making the solicitation does not solicit customers by telephone but only receives calls initiated by customers in response to the marketing materials and during those calls takes orders only without further solicitation. For purposes of the previous sentence, the term ''further solicitation'' does not include providing the customer with information about, or attempting to sell, anything promoted in the same marketing materials that prompted the customer's call. A ''charitable contribution'' means any donation or gift of money or any other thing of value, for example a transfer to a pooled income fund. *See* proposed Rule 3.23(n)(3), (11), (16), (17), (20), and (21); *see also* FINRA Rule 3230(m)(11), (14), (16), (17), and (20); and 16 CFR 310.2(f), (l), (n), (v), (w), (cc), and (dd).

[17] *See* 16 CFR 310.4(b)(1)(iii)(A) and (B) and (c); *see also* FINRA Rule 3230(a). *See* proposed Rule 3.23(n)(16) and (21) and *supra* note 15.

[18] *See* Federal Trade Commission, *Telemarketing Sales Rule,* 68 FR 4580 (Jan. 29, 2003) at 4628; and Federal Trade Commission, *Telemarketing Sales Rule,* 60 FR 43842 (Aug. 23, 1995) at 43855.

[19] *See* proposed Rule 3.23(b); *see also* FINRA Rule 3230(d)(4). The proposed rule change is substantially similar to the Federal Communications Commission's regulations regarding call disclosures. *See* 47 CFR 64.1200(d)(4).

[20] The Exchange believes that even if a Member satisfies the exception in paragraph (c), the Member should still make the caller disclosures required by paragraph (b) to the called person to ensure that the called person receives sufficient information regarding the purpose of the call.

[21] An ''established business relationship'' is a relationship between a Member and a person if (a) the person has made a financial transaction or has a security position, a money balance, or account activity with the Member or at a clearing firm that provides clearing services to the Member within the 18 months immediately preceding the date of an outbound telephone call; (b) the Member is the broker-dealer of record for an account of the person within the 18 months immediately preceding the date of an outbound telephone call; or (c) the person has contacted the Member to inquire about a product or service offered by the Member within the three months immediately preceding the date of an outbound telephone call. A person's established business relationship with a Member does not extend to the Member's affiliated entities unless the person would reasonably expect them to be included. Similarly, a person's established business relationship with a Member's affiliate does not extend to the Member unless the person would reasonably expect the Member to be included. The term ''account activity'' includes, but is not limited to, purchases, sales, interest credits or debits, charges or credits, dividend payments, transfer activity, securities receipts or deliveries, and/or journal entries relating to securities or funds in the possession or control of the Member. The term ''broker-dealer of record'' refers to the broker or dealer identified on a customer's account application for accounts held directly at a mutual fund or variable insurance product issuer. *See* proposed Rule 3.23(n)(1), (4), and (12); *see also* 16 CFR 310.2(o) and FINRA Rule 3230(m)(1), (4), and (12).

[22] *See* 16 CFR 310.4(b)(1)(iii)(A) and *supra* note 15; *see also* FINRA Rule 3230(a)(2).

its firm-specific do-not-call list at the time the request is made.[23]

(4) Members or associated persons of Members making an outbound telephone call must make the caller disclosures set forth in Rule 3.23(b).

(5) In the absence of a specific request by the person to the contrary, a person's do-not-call request will apply to the Member making the call, and will not apply to affiliated entities unless the consumer reasonably would expect them to be included given the identification of the call and the product being advertised.

(6) A Member making outbound telephone calls must maintain a record of a person's request not to receive further calls.

Inclusion of this requirement to adopt these procedures will not create any new obligations on Members, as they are already subject to identical provisions under Federal Communications Commission (''FCC'') telemarketing regulations.[24]

Do-Not-Call Safe Harbors

Proposed Rule 3.23(e) provides for certain exceptions to the telemarketing restriction set forth in proposed Rule 3.23(a)(3), which prohibits outbound telephone calls to persons on the FTC's national do-not-call registry. First, proposed Rule 3.23(e)(1) provides that a Member or associated person of a Member making outbound telephone calls will not be liable for violating proposed Rule 3.23(a)(3) if:

(1) The Member has an established business relationship with the called person; however, a person's request to be placed on the Member's firm-specific do-not-call list terminates the established business relationship exception to the national do-not-call registry provision for that Member even if the person continues to do business with the Member;

(2) the Member has obtained the person's prior express written consent, which must be clearly evidenced by a signed, written agreement (which may be obtained electronically under the E-Sign Act[25]) between the person and the Member that states that the person agrees to be contacted by the Member and includes the telephone number to which the calls may be placed; or

(3) the Member or associated person of a Member making the call has a personal relationship[26] with the called person.

The proposed rule change is substantially similar to the FTC's provision regarding an exception to the prohibition on making outbound telephone calls to persons on the FTC's do-not-call registry.[27] The FTC provided a discussion of the provision when it was adopted pursuant to the Prevention Act.[28]

Second, proposed Rule 3.23(e)(2) provides that a Member or associated person of a Member making outbound telephone calls will not be liable for violating proposed Rule 3.23(a)(3) if the Member or associated person of a Member demonstrates that the violation is the result of an error and that as part of the Member's routine business practice:

(1) The Member has established and implemented written procedures to comply with Rule 3.23(a) and (b);

(2) The Member has trained its personnel, and any entity assisting in its compliance, in the procedures established pursuant to the preceding clause;

(3) The Member has maintained and recorded a list of telephone numbers that it may not contact in compliance with Rule 3.23(d); and

(4) The Member uses a process to prevent outbound telephone calls to any telephone number on the Member's firm-specific do-not-call list or the national do-not-call registry, employing a version of the national do-not-call registry obtained from the FTC no more than 31 days prior to the date any call is made, and maintains records documenting this process.

The proposed rule change is substantially similar to the FTC's safe harbor to the prohibition on making outbound telephone calls to persons on a firm-specific do-not-call list or on the FTC's national do-not-call registry.[29] The FTC provided a discussion of the provision when it was adopted pursuant to the Prevention Act.[30]

Wireless Communications

Proposed Rule 3.23(f) clarifies that the provisions set forth in Rule 3.23 are applicable to Members and associated persons of Members making outbound telephone calls to wireless telephone numbers.[31]

Outsourcing Telemarketing

Proposed Rule 3.23(g) states that if a Member uses another entity to perform telemarketing services on its behalf, the Member remains responsible for ensuring compliance with Rule 3.23. The proposed rule change also provides that an entity or person to which a Member outsources its telemarketing services must be appropriately registered or licensed, where required.[32]

Billing Information

Proposed Rule 3.23(h) provides that, for any telemarketing transaction, no Member or associated person of a Member may submit billing information[33] for payment without the express informed consent of the customer. Proposed Rule 3.23(h) requires that each Member or associated person of a Member must obtain the express informed consent of the person to be charged and to be charged using the identified account.

If the telemarketing transaction involves pre-acquired account information[34] and a free-to-pay conversion[35] feature, the Member or associated person of a Member must:

(1) Obtain from the customer, at a minimum, the last four digits of the account number to be charged;

(2) Obtain from the customer an express agreement to be charged and to be charged using the identified account number; and

[23] Members must honor a person's do-not-call request within a reasonable time from the date the request is made, which may not exceed 30 days from the date of the request. If these requests are recorded or maintained by a party other than the Member on whose behalf the outbound telephone call is made, the Member on whose behalf the outbound telephone call is made will still be liable for any failures to honor the do-not-call request.

[24] *See* 47 CFR 64.1200(d); *see also* FINRA Rule 3230(d).

[25] 15 U.S.C. 7001 *et seq.*

[26] The term ''personal relationship'' means any family member, friend, or acquaintance of the person making an outbound telephone call. *See* proposed Rule 3.23(n)(18); *see also* FINRA Rule 3230(m)(18).

[27] *See* 16 CFR 310.4(b)(1)(iii)(B); *see also* FINRA Rule 3230(b).

[28] *See* Federal Trade Commission, *Telemarketing Sales Rule,* 68 FR 4580 (Jan. 29, 2003) at 4628; Federal Trade Commission, *Telemarketing Sales Rule,* 60 FR 43842 (Aug. 23, 1995) at 43854.

[29] *See* 16 CFR 310.4(b)(3); *see also* FINRA Rule 3230(c).

[30] *See* Federal Trade Commission, *Telemarketing Sales Rule,* 68 FR 4580 (Jan. 29, 2003) at 4628; and Federal Trade Commission, *Telemarketing Sales Rule,* 60 FR 43842 (Aug. 23, 1995) at 43855.

[31] *See also* FINRA Rule 3230(e).

[32] *See also* FINRA Rule 3230(f).

[33] The term ''billing information'' means any data that enables any person to access a customer's or donor's account, such as a credit or debit card number, a brokerage, checking, or savings account number, or a mortgage loan account number. *See* proposed Rule 3.23(n)(3).

[34] The term ''preacquired account information'' means any information that enables a Member or associated person of a Member to cause a charge to be placed against a customer's or donor's account without obtaining the account number directly from the customer or donor during the telemarketing transaction pursuant to which the account will be charged. *See* proposed Rule 3.23(n)(19).

[35] The term ''free-to-pay conversion'' means, in an offer or agreement to sell or provide any goods or services, a provision under which a customer receives a product or service for free for an initial period and will incur an obligation to pay for the product or service if he or she does not take affirmative action to cancel before the end of that period. *See* proposed Rule 3.23(n)(13).

(3) Make and maintain an audio recording of the entire telemarketing transaction.

For any other telemarketing transaction involving preacquired account information, the Member or associated person of a Member must:

(1) Identify the account to be charged with sufficient specificity for the customer to understand what account will be charged; and

(2) Obtain from the customer an express agreement to be charged and to be charged using the identified account number.

The proposed rule change is substantially similar to the FTC's provision regarding the submission of billing information.[36] The FTC provided a discussion of the provision when it was adopted pursuant to the Prevention Act.[37]

Caller Identification Information

Proposed Rule 3.23(i) provides that Members that engage in telemarketing must transmit caller identification information [38] and are explicitly prohibited from blocking caller identification information. The telephone number provided must permit any person to make a do-not-call request during normal business hours. These provisions are similar to the caller identification provision in the FTC rules.[39] Inclusion of these caller identification provisions in this proposed rule change will not create any new obligations on Members, as they are already subject to identical provisions under FCC telemarketing regulations.[40]

Unencrypted Consumer Account Numbers

Proposed Rule 3.23(j) prohibits a Member or associated person of a Member from disclosing or receiving, for consideration, unencrypted consumer account numbers for use in telemarketing. The proposed rule change is substantially similar to the FTC's provision regarding unencrypted consumer account numbers.[41] The FTC provided a discussion of the provision when it was adopted pursuant to the Prevention Act.[42] Additionally, the proposed rule change defines ''unencrypted'' as not only complete, visible account numbers, whether provided in lists or singly, but also encrypted information with a key to its decryption. The proposed definition is substantially similar to the view taken by the FTC.[43]

Abandoned Calls

Proposed Rule 3.23(k) prohibits a Member or associated person of a Member from abandoning [44] any outbound telephone call. The abandoned calls prohibition is subject to a ''safe harbor'' under proposed Rule 3.23(k)(2) that requires a Member or associated person of a Member:

(1) To employ technology that ensures abandonment of no more than three percent of all calls answered by a person, measured over the duration of a single calling campaign, if less than 30 days, or separately over each successive 30-day period or portion thereof that the campaign continues;

(2) For each outbound telephone call placed, to allow the telephone to ring for at least 15 seconds or four rings before disconnecting an unanswered call;

(3) Whenever a Member or associated person of a Member is not available to speak with the person answering the outbound telephone call within two seconds after the person's completed greeting, promptly to play a prerecorded message stating the name and telephone number of the Member or associated person of a Member on whose behalf the call was placed; and

(4) To maintain records documenting compliance with the ''safe harbor.''

The proposed rule change is substantially similar to the FTC's provisions regarding abandoned calls.[45] The FTC provided a discussion of the provisions when they are adopted pursuant to the Prevention Act.[46]

Prerecorded Messages

Proposed Rule 3.23(l) prohibits a Member or associated person of a Member from initiating any outbound telephone call that delivers a prerecorded message without a person's express written agreement [47] to receive such calls. The proposed rule change also requires that all prerecorded outbound telephone calls provide specified opt-out mechanisms so that a person can opt out of future calls. The prohibition does not apply to a prerecorded message permitted for compliance with the ''safe harbor'' for abandoned calls under proposed Rule 3.23(k)(2). The proposed rule change is substantially similar to the FTC's provisions regarding prerecorded messages.[48] The FTC provided a discussion of the provisions when they were adopted pursuant to the Prevention Act.[49]

Credit Card Laundering

Proposed Rule 3.23(m) prohibits credit card laundering, the practice of depositing into the credit card system [50] a sales draft that is not the result of a credit card transaction between the cardholder [51] and the Member. Except as expressly permitted, the proposed rule change prohibits a Member or associated person of a Member from:

(1) Presenting to or depositing into the credit card system for payment, a credit card sales draft [52] generated by a telemarketing transaction that is not the result of a telemarketing credit card transaction between the cardholder and the Member;

[36] *See* 16 CFR 310.4(a)(7); *see also* FINRA Rule 3230(i).

[37] *See* Federal Trade Commission, *Telemarketing Sales Rule,* 68 FR 4580 (Jan. 29, 2003) at 4616.

[38] Caller identification information includes the telephone number and, when made available by the Member's telephone carrier, the name of the Member.

[39] *See* 16 CFR 310.4(a)(8); *see also* FINRA Rule 3230(g).

[40] *See* 47 CFR 64.1601(e).

[41] *See* 16 CFR 310.4(a)(6); *see also* FINRA Rule 3230(h).

[42] *See* Federal Trade Commission, *Telemarketing Sales Rule,* 68 FR 4580 (Jan. 29, 2003) at 4615.

[43] *See id.* at 4616.

[44] An outbound telephone call is ''abandoned'' if the called person answers it and the call is not connected to a Member or associated person of a Member within two seconds of the called person's completed greeting.

[45] *See* 16 CFR 310.4(b)(1)(iv) and (b)(4); *see also* FINRA Rule 3230(j).

[46] *See* Federal Trade Commission, *Telemarketing Sales Rule,* 68 FR 4580 (Jan. 29, 2003) at 4641.

[47] The express written agreement must: (a) Have been obtained only after a clear and conspicuous disclosure that the purpose of the agreement is to authorize the Member to place prerecorded calls to such person; (b) have been obtained without requiring, directly or indirectly, that the agreement be executed as a condition of purchasing any good or service; (c) evidence the willingness of the called person to receive calls that deliver prerecorded messages by or on behalf of the Member; and (d) include the person's telephone number and signature (which may be obtained electronically under the E-Sign Act).

[48] *See* 16 CFR 310.4(b)(1)(v); *see also* FINRA Rule 3230(k).

[49] *See* Federal Trade Commission, *Telemarketing Sales Rule,* 73 FR 51164 (Aug. 29, 2008) at 51165.

[50] The term ''credit card system'' means any method or procedure used to process credit card transactions involving credit cards issued or licensed by the operator of that system. The term ''credit card'' means any card, plate, coupon book, or other credit device existing for the purpose of obtaining money, property, labor, or services on credit. The term ''credit'' means the right granted by a creditor to a debtor to defer payment of debt or to incur debt and defer its payment. *See* proposed Rule 3.23(n)(7), (8), and (10).

[51] The term ''cardholder'' means a person to whom a credit card is issued or who is authorized to use a credit card on behalf of or in addition to the person to whom the credit card is issued. *See* proposed Rule 3.23(n)(6).

[52] The term ''credit card sales draft'' means any record or evidence of a credit card transaction. *See* proposed Rule 3.23(n)(9).

(2) Employing, soliciting, or otherwise causing a merchant,[53] or an employee, representative or agent of the merchant to present to or to deposit into the credit card system for payment, a credit card sales draft generated by a telemarketing transaction that is not the result of a telemarketing credit card transaction between the cardholder and the Member; or

(3) Obtaining access to the credit card system through the use of a business relationship or an affiliation with a merchant, when such access is not authorized by the merchant agreement[54] or the applicable credit card system.

The proposed rule change is substantially similar to the FTC's provision regarding credit card laundering.[55] The FTC provided a discussion of the provisions when they were adopted pursuant to the Prevention Act.[56]

Definitions

Proposed Rule 3.23(n) adopts the following definitions, which are substantially similar to the FTC's definitions of these terms: ''acquirer,'' ''billing information,'' ''caller identification service,'' ''cardholder,'' ''charitable contribution,'' ''credit,'' ''credit card,'' ''credit card sales draft,'' ''credit card system,'' ''customer,'' ''donor,'' ''established business relationship,'' ''free-to-pay conversion,'' ''merchant,'' ''merchant agreement,'' ''outbound telephone call,'' ''person,'' ''pre-acquired account information,'' ''telemarketer,'' and ''telemarketing.''[57] The FTC provided a discussion of each definition when they were adopted pursuant to the Prevention Act.[58]

State and Federal Laws

Proposed Rule 3.23, Interpretation and Policy .01[59] reminds Members and associated persons of Members that engage in telemarketing that they also are subject to the requirements of relevant state and federal laws and rules, including the Prevention Act, the Telephone Consumer Protection Act of 1991,[60] and the rules of the FCC relating to telemarketing practices and the rights of telephone consumers.[61]

Announcement in Regulatory Circular

The Exchange will announce the implementation date of the proposed rule change in a Regulatory Notice to be published no later than 90 days following the effective date. The implementation date will be no later than 180 days following the effective date.

2. Statutory Basis

The Exchange believes that the proposed rule change is consistent with the Act and the rules and regulations thereunder applicable to the Exchange and, in particular, the requirements of Section 6(b) of the Act.[62] Specifically, the Exchange believes the proposed rule change is consistent with the Section 6(b)(5)[63] requirements that the rules of an exchange be designed to promote just and equitable principles of trade, to prevent fraudulent and manipulative acts, to remove impediments to and to perfect the mechanism for a free and open market and a national market system, and, in general, to protect investors and the public interest. In particular, the proposed rule change will prevent fraudulent and manipulative acts and protect investors and the public interest by continuing to prohibit Members from engaging in deceptive and other abusive telemarketing acts or practices. Additionally, the proposed rule change removes impediments to and perfects the mechanism for a free and open market and a national market system, because it provides consistency among telemarketing rules of national securities exchanges and FINRA, therefore making it easier for investors to comply with these rules.

B. Self-Regulatory Organization's Statement on Burden on Competition

The Exchange does not believe that the proposed rule change imposes any burden on competition.

C. Self-Regulatory Organization's Statement on Comments on the Proposed Rule Change Received From Members, Participants or Others

The Exchange has neither solicited nor received written comments on the proposed rule change.

III. Date of Effectiveness of the Proposed Rule Changes and Timing for Commission Action

Because the foregoing proposed rule change does not: (i) Significantly affect the protection of investors or the public interest; (ii) impose any significant burden on competition; and (iii) become operative for 30 days from the date on which it was filed, or such shorter time as the Commission may designate, it has become effective pursuant to Section 19(b)(3)(A) of the Act[64] and Rule 19b–4(f)(6)(iii) thereunder.[65]

For the foregoing reasons, this rule filing qualifies as a ''non-controversial'' rule change under Rule 19b–4(f)(6), which renders the proposed rule change effective upon filing with the Commission. The Exchange has requested that the Commission waive the 30-day operative delay period after which a proposed rule change under Rule 19b–4(f)(6) becomes effective. The Commission believes that waiving the 30-day operative delay is consistent with the protection of investors and the public interest because such waiver will afford Exchange members the benefit of the proposal—the prohibition of deceptive and other abusive telemarketing acts or practices—without unnecessary delay. Such waiver will also allow the Exchange to comply with the Commission's directive and implement uniform telemarketing rules across self-regulatory organizations, creating consistency among these rules for investors, as soon as possible. For these reasons, the Commission designates the proposed rule change as operative under upon filing.[66]

[53] The term ''merchant'' means a person who is authorized under a written contract with an acquirer to honor or accept credit cards, or to transmit or process for payment credit card payments, for the purchase of goods or services or a charitable contribution. The term ''acquirer'' means a business organization, financial institution, or an agent of a business organization or financial institution that has authority from an organization that operates or licenses a credit card system to authorize merchants to accept, transmit, or process payment by credit card through the credit card system for money, goods or services, or anything else of value. *See* proposed Rule 3.23(n)(2) and (14).

[54] The term ''merchant agreement'' means a written contract between a merchant and an acquirer to honor or accept credit cards, or to transmit or process for payment credit card payments, for the purchase of goods or services or a charitable contribution. *See* proposed Rule 3.23(n)(15).

[55] *See* 16 CFR 310.3(c); *see also* FINRA Rule 3230(l).

[56] *See* Federal Trade Commission, *Telemarketing Sales Rule,* 60 FR 43842 (Aug. 23, 1995) at 43852.

[57] *See* proposed Rule 3.23(n)(2), (3), (5), (6), (7), (8), (9), (10), (11), (12), (13), (14), (15), (16), (17), (19), (20), and (21); and 16 CFR 310.2(a), (c), (d), (e), (f), (h), (i), (j), (k), (l), (n), (o), (p), (s), (t), (v), (w), (x), (cc), and (dd); *see also* FINRA Rule 3230(m)(2), (3), (5), (6), (7), (8), (9), (10), (11), (12), (13), (14), (15), (16), (17), (19), and (20). The proposed rule change also adopts definitions of ''account activity,'' ''broker-dealer of record,'' and ''personal relationship'' that are substantially similar FINRA's definitions of these terms. *See* proposed Rule 3.23(n)(1), (4), and (18) and FINRA Rule 3230(m)(1), (4), and (18); *see also* 47 CFR 64.1200(f)(14) (FCC's definition of ''personal relationship'').

[58] *See* Federal Trade Commission, *Telemarketing Sales Rule,* 60 FR 43842 (Aug. 23, 1995) at 43843; and Federal Trade Commission, *Telemarketing Sales Rule,* 68 FR 4580 (Jan. 29, 2003) at 4587.

[59] *See also* FINRA Rule 3230, Supplementary Material .01, *Compliance with Other Requirements.*

[60] *See* 47 U.S.C. 227.

[61] *See* 47 CFR 64.1200.

[62] 15 U.S.C. 78f(b).

[63] 15 U.S.C. 78f(b)(5).

[64] 15 U.S.C. 78s(b)(3)(A).

[65] 17 CFR 240.19b–4(f)(6).

[66] For purposes only of waiving the 30-day operative delay, the Commission has considered the

At any time within 60 days of the filing of the proposed rule change, the Commission summarily may temporarily suspend such rule change if it appears to the Commission that such action is necessary or appropriate in the public interest, for the protection of investors, or otherwise in furtherance of the purposes of the Act.

IV. Solicitation of Comments

Interested persons are invited to submit written data, views and arguments concerning the foregoing, including whether the proposal is consistent with the Act. Comments may be submitted by any of the following methods:

Electronic Comments

- Use the Commission's Internet comment form (*http://www.sec.gov/rules/sro.shtml*); or
- Send an email to *rule-comments@sec.gov.* Please include File No. SR–BATS–2012–028 on the subject line.

Paper Comments

- Send paper comments in triplicate to Elizabeth M. Murphy, Secretary, Securities and Exchange Commission, 100 F Street NE., Washington, DC 20549–1090.

All submissions should refer to File No. SR–BATS–2012–028. This file number should be included on the subject line if email is used. To help the Commission process and review your comments more efficiently, please use only one method. The Commission will post all comments on the Commission's Internet Web site (*http://www.sec.gov/rules/sro.shtml*). Copies of the submission, all subsequent amendments, all written statements with respect to the proposed rule change that are filed with the Commission, and all written communications relating to the proposed rule change between the Commission and any person, other than those that may be withheld from the public in accordance with the provisions of 5 U.S.C. 552, will be available for Web site viewing and printing in the Commission's Public Reference Room, 100 F Street NE., Washington, DC 20549, on official business days between the hours of 10:00 a.m. and 3:00 p.m. Copies of such filing also will be available for inspection and copying at the principal office of the Exchange. All comments received will be posted without change; the Commission does not edit personal identifying information from submissions. You should submit only information that you wish to make available publicly. All submissions should refer to File No. SR–BATS–2012–028 and should be submitted on or before August 16, 2012.

For the Commission, by the Division of Trading and Markets, pursuant to delegated authority.[67]

Kevin M. O'Neill,

Deputy Secretary.

[FR Doc. 2012–18218 Filed 7–25–12; 8:45 am]

BILLING CODE 8011–01–P

proposed rule's impact on efficiency, competition, and capital formation. *See* 15 U.S.C. 78c(f).

[67] 17 CFR 200.30–3(a)(12).

SECURITIES AND EXCHANGE COMMISSION

Release No. 34–67478; File No. SR–CBOE–2012–066]

Self-Regulatory Organizations; Chicago Board Options Exchange, Incorporated; Notice of Filing of Proposed Rule Change To Increase Position and Exercise Limits for EEM Options

July 20, 2012.

Pursuant to Section 19(b)(1) of the Securities Exchange Act of 1934 (''Act''),[1] and Rule 19b–4 thereunder,[2] notice is hereby given that on July 9, 2012, the Chicago Board Options Exchange, Incorporated (''Exchange'' or ''CBOE'') filed with the Securities and Exchange Commission (''Commission'') the proposed rule change as described in Items I and II below, which Items have been prepared by the Exchange. The Commission is publishing this notice to solicit comments on the proposed rule change from interested persons.

I. Self-Regulatory Organization's Statement of the Terms of Substance of the Proposed Rule Change

CBOE proposes to amend Interpretation and Policy .07 to Rule 4.11 (Position Limits) to increase the position and exercise limits for options on the iShares MSCI Emerging Markets Index Fund (''EEM'') to 500,000 contracts. The text of the rule proposal is available on the Exchange's Web site (*http://www.cboe.org/legal*), at the Exchange's Office of the Secretary and at the Commission.

[1] 15 U.S.C. 78s(b)(1).

[2] 17 CFR 240.19b–4.

II. Self-Regulatory Organization's Statement of the Purpose of, and Statutory Basis for, the Proposed Rule Change

In its filing with the Commission, the self-regulatory organization included statements concerning the purpose of and basis for the proposed rule change and discussed any comments it received on the proposed rule change. The text of those statements may be examined at the places specified in Item IV below. The Exchange has prepared summaries, set forth in sections A, B, and C below, of the most significant parts of such statements.

A. Self-Regulatory Organization's Statement of the Purpose of, and Statutory Basis for, the Proposed Rule Change

1. Purpose

The Exchange began trading options on the iShares MSCI Emerging Markets Index Fund (''EEM'') on March 9, 2006. Position limits for exchange-traded fund (''ETFs'') options, such as EEM options, are determined pursuant to Rule 4.11 and vary according to the number of outstanding share [sic] and past six-month trading volume of the underlying stock or ETF. The largest in capitalization and most frequently traded stocks and ETFs have an option position limit of 250,000 contracts (with adjustments for splits, re-capitalizations, etc.) on the same side of the market; smaller capitalization stocks and ETFs have position limits of 200,000, 75,000, 50,000 or 25,000 contracts (with adjustments for splits, re-capitalizations, etc.) on the same side of the market. The current position limit for EEM options is 250,000 contracts. The purpose of the proposed rule change is to amend CBOE Rule 4.11, Interpretation and Policy .07 to increase the position and exercise limits for EEM options to 500,000 contracts.[3]

There is precedent for establishing position limits for options on actively-traded ETFs and these position limit levels are set forth in Interpretation and Policy .07 to Rule 4.11.

Security underlying option	Position limit (contracts)
The DIAMONDS Trust (DIA) ..	300,000
The Standard and Poor's Depositary Receipts Trust (SPY)	900,000
The iShares Russell 2000 Index Fund (IWM)	500,000

[3] By virtue of CBOE Rule 4.12, Interpretation and Policy .02, which is not being amended by this filing, the exercise limit for EEM options would be similarly increased.

Security underlying option	Position limit (contracts)
The PowerShares QQQ Trust (QQQQ)	900,000

In support of this proposed rule change, the Exchange has collected trading statistics comparing EEM to IWM and SPY. As shown in the following table, the average daily volume in 2011 for EEM was 65 million shares compared to 64.1 million shares for IWM and 213 million shares for SPY. The total shares outstanding for EEM are 922.9 million compared to 192.6 million shares for IWM and 716.1 million shares for SPY. Further, the fund market cap for EEM is $41.1 billion compared to $15.5 billion for IWM and $98.3 billion for SPY.

ETF	2011 ADV (mil. shares)	2011 ADV (option contracts)	Shares outstanding (mil.)	Fund market cap ($bil)
EEM	65	280,000	922.9	41.1
IWM	64.1	662,500	192.6	15.5
SPY	213	2,892,000	716.1	98.3

The Exchange believes that increasing position limits for EEM options will lead to a more liquid and competitive market environment for EEM options that will benefit customers interested in this product.

Under the Exchange's proposal, the options reporting requirement for EEM options would continue unabated. Thus, the Exchange would still require that each Trading Permit Holder (''TPH'') or TPH organization that maintains a position in EEM options on the same side of the market, for its own account or for the account of a customer, report certain information to the Exchange. This information would include, but would not be limited to, the option position, whether such position is hedged and, if so, a description of the hedge, and the collateral used to carry the position, if applicable. Exchange market-makers (including Designated Primary Market-Makers) would continue to be exempt from this reporting requirement, as market-maker information can be accessed through the Exchange's market surveillance systems. In addition, the general reporting requirement for customer accounts that maintain an aggregate position of 200 or more option contracts would remain at this level for EEM options.[4]

As the anniversary of listed options trading approaches its fortieth year, the Exchange believes that the existing surveillance procedures and reporting requirements at CBOE, other options exchanges, and at the several clearing firms are capable of properly identifying unusual and/or illegal trading activity. In addition, routine oversight inspections of the Exchange's regulatory programs by the Commission have not uncovered any material inconsistencies or shortcomings in the manner in which the Exchange's market surveillance is conducted. These procedures utilize daily monitoring of market movements via automated surveillance techniques to identify unusual activity in both options and underlying stocks.[5]

Furthermore, large stock holdings must be disclosed to the Commission by way of Schedules 13D or 13G.[6] Options positions are part of any reportable positions and, thus, cannot be legally hidden. Moreover, the Exchange's requirement that TPHs file reports with the Exchange for any customer who held aggregate large long or short positions of any single class for the previous day will continue to serve as an important part of the Exchange's surveillance efforts.

The Exchange believes that the current financial requirements imposed by the Exchange and by the Commission adequately address concerns that a TPH or its customer may try to maintain an inordinately large un-hedged position in an option, particularly on EEM. Current margin and risk-based haircut methodologies serve to limit the size of positions maintained by any one account by increasing the margin and/or capital that a TPH must maintain for a large position held by itself or by its customer.[7] In addition, the Commission's net capital rule, Rule 15c3–1[8] under the Act,[9] imposes a capital charge on TPHs to the extent of any margin deficiency resulting from the higher margin requirement.

2. Statutory Basis

The Exchange believes the proposed rule change is consistent with the Act and the rules and regulations thereunder, including the requirements of Section 6(b) of the Act.[10] In particular, the Exchange believes the proposed rule change is consistent with the Section 6(b)(5)[11] requirements that the rules of an exchange be designed to promote just and equitable principles of trade, to prevent fraudulent and manipulative acts, to foster cooperation and coordination with persons engaged in facilitating transactions in securities, to remove impediments to and to perfect the mechanism for a free and open market and a national market system, and, in general, to protect investors and the public interest. Specifically, the proposed rule change will benefit large market makers (which generally have the greatest potential and actual ability to provide liquidity and depth in the product), as well as retail traders, investors, and public customers, by providing them with a more effective trading and hedging vehicle. In addition, the Exchange believes that the structure of EEM options and the considerable liquidity of the market for EEM options diminish the opportunity to manipulate this product and disrupt the underlying market that a lower position limit may protect against.

B. Self-Regulatory Organization's Statement on Burden on Competition

CBOE does not believe that the proposed rule change will impose any burden on competition not necessary or appropriate in furtherance of the purposes of the Act.

C. Self-Regulatory Organization's Statement on Comments on the Proposed Rule Change Received From Members, Participants or Others

No written comments were solicited or received with respect to the proposed rule change.

III. Date of Effectiveness of the Proposed Rule Change and Timing for Commission Action

Within 45 days of the date of publication of this notice in the **Federal Register** or within such longer period (i) as the Commission may designate up to

[4] For reporting requirements, *see* CBOE Rule 4.13.

[5] These procedures have been effective for the surveillance of EEM options trading and will continue to be employed.

[6] 17 CFR 240.13d–1.

[7] *See* CBOE Rule 12.3 for a description of margin requirements.

[8] 17 CFR 240.15c3–1.

[9] 15 U.S.C. 78s(b)(1) [sic].

[10] 15 U.S.C. 78f(b).

[11] 15 U.S.C. 78f(b)(5).

90 days of such date if it finds such longer period to be appropriate and publishes its reasons for so finding or (ii) as to which the self-regulatory organization consents, the Commission will:

(A) By order approve or disapprove such proposed rule change, or

(B) Institute proceedings to determine whether the proposed rule change should be disapproved.

IV. Solicitation of Comments

Interested persons are invited to submit written data, views, and arguments concerning the foregoing, including whether the proposed rule change is consistent with the Act. Comments may be submitted by any of the following methods:

Electronic Comments

- Use the Commission's Internet comment form (*http://www.sec.gov/rules/sro.shtml*); or
- Send an email to *rule-comments@sec.gov*. Please include File Number SR–CBOE–2012–066 on the subject line.

Paper Comments

- Send paper comments in triplicate to Elizabeth M. Murphy, Secretary, Securities and Exchange Commission, 100 F Street NE., Washington, DC 20549–1090.

All submissions should refer to File Number SR–CBOE–2012–066. This file number should be included on the subject line if email is used. To help the Commission process and review your comments more efficiently, please use only one method. The Commission will post all comments on the Commission's Internet Web site (*http://www.sec.gov/rules/sro.shtml*). Copies of the submission, all subsequent amendments, all written statements with respect to the proposed rule change that are filed with the Commission, and all written communications relating to the proposed rule change between the Commission and any person, other than those that may be withheld from the public in accordance with the provisions of 5 U.S.C. 552, will be available for Web site viewing and printing in the Commission's Public Reference Room, 100 F Street NE., Washington, DC 20549, on official business days between the hours of 10:00 a.m. and 3:00 p.m. Copies of the filing also will be available for inspection and copying at the principal office of the Exchange. All comments received will be posted without change; the Commission does not edit personal identifying information from submissions. You should submit only information that you wish to make available publicly. All submissions should refer to File Number SR–CBOE–2012–066 and should be submitted on or before August 16, 2012.

For the Commission, by the Division of Trading and Markets, pursuant to delegated authority.[12]

Kevin M. O'Neill,

Deputy Secretary.

[FR Doc. 2012–18219 Filed 7–25–12; 8:45 am]

BILLING CODE 8011–01–P

[12] 17 CFR 200.30–3(a)(12).

DEPARTMENT OF STATE

[Public Notice 7964]

60-Day Notice of Proposed Information Collection: Humphrey Evaluation Survey

ACTION: Notice of request for public comments.

SUMMARY: The Department of State is seeking Office of Management and Budget (OMB) approval for the information collection described below. The purpose of this notice is to allow 60 days for public comment in the **Federal Register** preceding submission to OMB. We are conducting this process in accordance with the Paperwork Reduction Act of 1995.

- *Title of Information Collection:* Humphrey Evaluation Survey.
- *OMB Control Number:* None (OMB Control Number 1405–xxxx).
- *Type of Request:* New Collection.
- *Originating Office:* Bureau of Educational and Cultural Affairs, Office of Policy and Evaluation, Evaluation Division (ECA/P/V).
- *Form Number:* SV2012–0003.
- *Respondents:* Foreign Humphrey participants between 1979 and 2009.
- *Estimated Number of Respondents:* 1,200 annually.
- *Estimated Number of Responses:* 1,200 annually.
- *Average Hours per Response:* 30 minutes.
- *Total Estimated Burden:* 600 hours annually.
- *Frequency:* One time.
- *Obligation to Respond:* Voluntary.

DATES: The Department will accept comments from the public up to 60 days from July 26, 2012.

ADDRESSES:

You may submit comments by any of the following methods:

- *Web:* Persons with access to the Internet may view and comment on this notice by going to the Federal regulations Web site at *www.regulations.gov*. You can search for the document by: Selecting ''Notice'' under Document Type, entering the Public Notice number as the ''Keyword or ID'', checking the ''Open for Comment'' box, and then click ''Search''. If necessary, use the ''Narrow by Agency'' option on the Results page. Email: *HaleMJ2@state.gov*.
- *Email: HaleMJ2@state.gov.*
- *Mail (paper, disk, or CD–ROM submissions):* ECA/P/V, SA–5, C2 Floor, Department of State, Washington, DC 20522–0505.
- *Fax:* 202–632–6320.
- *Hand Delivery or Courier:* ECA/P/V, SA–5, C2 Floor, Department of State, 2200 C Street NW., Washington, DC 20037.

You must include the DS form number (if applicable), information collection title, and OMB control number in any correspondence.

FOR FURTHER INFORMATION CONTACT: Direct requests for additional information regarding the collection listed in this notice, including requests for copies of the proposed information collection and supporting documents, to Michelle Hale, ECA/P/V, SA–5, C2 Floor, Department of State, Washington, DC 20522–0582, who may be reached on 202–632–6312 or at *HaleMJ2@state.gov.*

SUPPLEMENTARY INFORMATION:

We are soliciting public comments to permit the Department to:

- Evaluate whether the proposed information collection is necessary for the proper performance of our functions.
- Evaluate the accuracy of our estimate of the burden of the proposed collection, including the validity of the methodology and assumptions used.
- Enhance the quality, utility, and clarity of the information to be collected.
- Minimize the reporting burden on those who are to respond, including the use of automated collection techniques or other forms of technology.

Abstract of Proposed Collection

This request for a new information collection will allow ECA/P/V to conduct a descriptive survey of the exchange participants who went on the Hubert H. Humphrey Fellowship Program between 1979 and 2009. Collecting this data will help ECA/P/V examine what Fellows have been doing post-program, and their roles in critical areas of change at work, and in their fields of study, and how the program affected their work. Data collections efforts will be conducted via electronic survey.

Methodology

All data will be collected electronically via SurveyGizmo, an on-line surveying tool.

Dated: July 7, 2012.

Matt Lussenhop,

Director of the Office of Policy and Evaluation, Bureau of Educational and Cultural Affairs, Department of State.

[FR Doc. 2012–18279 Filed 7–25–12; 8:45 am]

BILLING CODE 4710–05–P

DEPARTMENT OF TRANSPORTATION

Office of the Secretary

[Docket No. DOT–OST–2012–0111]

Senior Executive Service Performance Review Boards Membership

AGENCY: Office of the Secretary, Department of Transportation (DOT).

ACTION: Notice of Performance Review Board (PRB) appointments.

SUMMARY: DOT publishes the names of the persons selected to serve on the various Departmental PRBs as required by 5 U.S.C. 4314(c)(4).

FOR FURTHER INFORMATION CONTACT: Nancy A. Mowry, Director, Departmental Office of Human Resource Management, (202) 366–4088.

SUPPLEMENTARY INFORMATION: The persons named below have been selected to serve on one or more Departmental PRBs.

Issued in Washington, DC, on July 17, 2012.

Brodi L. Fontenot,

Deputy Assistant Secretary for Administration.

Department of Transportation

Federal Highway Administration

Alicandri, Elizabeth
Arnold, Robert E.
Baxter, John R.
Bezio, Brian R.
Brecht-Clark, Jan M.
Brown, Janice W.
Castellanos, Nelson
Cheatham, James A.
Conner, Clara H.
Curtis, Joyce A.
DeCarme, David G.
Elston, Debra S.
Evans, Monique R.
Furst, Anthony T.
Griffith, Michael S.
Holian, Thomas P.
Kehrli, Mark R.
Knopp, Martin C.
Konove, Elissa K.
Lindley, Jeffrey A.
Lucero, Amy C.
Lwin, Maung Myint
Marchese, April Lynn
McElroy, Regina S.
Miller, Thomas R.
Nadeau, Gregory G.
Nicol, David A.
Pagan-Ortiz, Jorge E.
Paniati, Jeffrey F.
Peters, Joseph I.
Ridenour, Melisa Lee
Saunders, Ian C.
Shepard, Gloria Morgan
Solomon, Gerald L.
St. Denis, Catherine
Stephanos, Peter J.
Suarez, Ricardo
Tischer, Mary Lynn
Toole, Patricia Ann
Trentacoste, Michael F.
Waidelich, Jr., Walter C.
Winter, David R.
Wlaschin, Julius B.

Federal Motor Carrier Administration

Amos, Anna J.
Bronrott, William A.
Collins, Anne L.
Dillingham, Steven D.
Horan III, Charles A.
Jefferson, Daphne Y.
Leone, Geraldine K.
Minor, Larry W.
Smith, Steven K.
Quade III, William A.
Van Steenburg, John W.

Federal Railroad Administration

Haley, Michael T.
Hedlund, Karen J.
Hill, Corey W.
Hynes, Ronald E.
Lauby, Robert C.
Logue, Michael J.
Nissenbaum, Paul
Pennington, Rebecca A.
Strang, Jo E.
Tunna, John M.

Federal Transit Administration

Biehl, Scott A.
Buchanan-Smith, Henrika
Carter, Dorval R.
Hynes-Cherin, Brigid
Linnertz, Ann M.
McMillan, Therese Watkins
Mello, Mary Elizabeth
Patrick, Robert C.
Rogers, Leslie T.
Simon, Marisol R.
Taylor, Yvette G.
Tuccillo, Robert J.
Valdes, Vincent
Welbes, Matthew J.

Maritime Administration

Bohnert, Roger V.
Brohl, Helen A.
Byrne, Joseph Andrew
Kumar, Shashi N.
Lesnick, H. Keith
McMahon, Christopher J.
Moschkin, Lydia
Pixa, Rand R.
Tokarski, Kevin M.
Weaver, Janice G.

National Highway Traffic Safety Administration

Abraham, Julie
Beuse, Nathaniel M.
Bonanti, Christopher J.
Borris II, Frank S.
Brown, Michael L.
Carra, Joseph S.
Coggins, Colleen P.
Donaldson, K. John
Geraci, Michael N.
Guerci, Lloyd S.
Gunnels, Mary D.
Harris, Claude H.
Maddox, John M.
McLaughlin, Brian M.
McLaughlin, Susan G.
Medford, Ronald L.
Michael, Jeffrey P.
Saul, Roger A.
Shelton, Terry T.
Simons, James F.
Smith, Daniel C.
Vincent, O. Kevin
Walter, Gregory A.
Wood, Stephen P.

Office of the Secretary

Bell, David K.
Brown, Gregory A.
DeBoer, Joan M.
Eisner, Neil R.
Fields, George C.
Forsgren, Janet R.
Geier, Paul M.
Gretch, Paul L.
Hazeur, Camille M.
Herlihy, Thomas W.
Homan, Todd M.
Horn, Donald H.
Hurdle, Lana T.
Jackson, Ronald A.
Jones, Mary N. Whigham
Jones, Maureen A.
Kaleta, Judith S.
Lawson, Linda L.
Lee, Jr., Robert M.
Lefevre, Maria S.
Lowder, Michael W.
McDermott, Susan E.
Mowry, Nancy A.
Osborne, Elizabeth D.
Petrosino-Woolverton, Marie
Podberesky, Samuel
Rivait, David J.
Scarton, Amy M.
Schmidt, Robert T.
Smith, Willie H.
Streitmatter, Marlise
Szabat, Joel M.
Washington, Keith E.
Wells, John V.

Ziff, Laura M.

Pipeline and Hazardous Materials Safety Administration

Daugherty, Linda
El-Sibaie, Magdy A.
Mayberry, Alan K.
Posten, R. Ryan
Poyer, Scott A.
Summitt, Monica J.
Wiese, Jeffrey D.

Research and Innovative Technology Administration

Aylward, Anne D.
Hu, Patricia S.
Ishihara, David S.
Johns, Robert C.
Russo, Anthony J.
Winfree, Gregory D.

Saint Lawrence Seaway Development Corporation

Middlebrook, Craig H.
Pisani, Salvatore L.

[FR Doc. 2012–18007 Filed 7–25–12; 8:45 am]

BILLING CODE 4910–9X–P

DEPARTMENT OF TRANSPORTATION

Federal Motor Carrier Safety Administration

[FMCSA Docket No. FMCSA–2012–0108]

Qualification of Drivers; Exemption Applications; Diabetes Mellitus

AGENCY: Federal Motor Carrier Safety Administration (FMCSA), DOT.

ACTION: Notice of final disposition.

SUMMARY: FMCSA announces its decision to exempt 23 individuals from its rule prohibiting persons with insulin-treated diabetes mellitus (ITDM) from operating commercial motor vehicles (CMVs) in interstate commerce. The exemptions will enable these individuals to operate CMVs in interstate commerce.

DATES: The exemptions are effective July 26, 2012. The exemptions expire on July 28, 2014.

FOR FURTHER INFORMATION CONTACT: Elaine M. Papp, Chief, Medical Programs Division, (202) 366–4001, *fmcsamedical@dot.gov,* FMCSA, Room W64–224, Department of Transportation, 1200 New Jersey Avenue SE., Washington, DC 20590–0001. Office hours are from 8:30 a.m. to 5 p.m., Monday through Friday, except Federal holidays.

SUPPLEMENTARY INFORMATION:

Electronic Access

You may see all the comments online through the Federal Document Management System (FDMS) at: *http://www.regulations.gov.*

Docket: For access to the docket to read background documents or comments, go to *http://www.regulations.gov* and/or Room W12–140 on the ground level of the West Building, 1200 New Jersey Avenue SE., Washington, DC, between 9 a.m. and 5 p.m., Monday through Friday, except Federal holidays.

Privacy Act: Anyone may search the electronic form of all comments received into any of DOT's dockets by the name of the individual submitting the comment (or of the person signing the comment, if submitted on behalf of an association, business, labor union, or other entity). You may review DOT's Privacy Act Statement for the Federal Docket Management System (FDMS) published in the **Federal Register** on January 17, 2008 (73 FR 3316), or you may visit *http://edocket.access.gpo.gov/2008/pdf/E8–785.pdf.*

Background

On June 6, 2012, FMCSA published a notice of receipt of Federal diabetes exemption applications from 23 individuals and requested comments from the public (77 FR 33551). The public comment period closed on July 6, 2012, and no comments were received.

FMCSA has evaluated the eligibility of the 23 applicants and determined that granting the exemptions to these individuals would achieve a level of safety equivalent to or greater than the level that would be achieved by complying with the current regulation 49 CFR 391.41(b)(3).

Diabetes Mellitus and Driving Experience of the Applicants

The Agency established the current requirement for diabetes in 1970 because several risk studies indicated that drivers with diabetes had a higher rate of crash involvement than the general population. The diabetes rule provides that ''A person is physically qualified to drive a commercial motor vehicle if that person has no established medical history or clinical diagnosis of diabetes mellitus currently requiring insulin for control'' (49 CFR 391.41(b)(3)).

FMCSA established its diabetes exemption program, based on the Agency's July 2000 study entitled ''A Report to Congress on the Feasibility of a Program to Qualify Individuals with Insulin-Treated Diabetes Mellitus to Operate in Interstate Commerce as Directed by the Transportation Act for the 21st Century.'' The report concluded that a safe and practicable protocol to allow some drivers with ITDM to operate CMVs is feasible. The September 3, 2003 (68 FR 52441), **Federal Register** notice in conjunction with the November 8, 2005 (70 FR 67777), **Federal Register** notice provides the current protocol for allowing such drivers to operate CMVs in interstate commerce.

These 23 applicants have had ITDM over a range of 1 to 40 years. These applicants report no severe hypoglycemic reactions resulting in loss of consciousness or seizure, requiring the assistance of another person, or resulting in impaired cognitive function that occurred without warning symptoms, in the past 12 months and no recurrent (2 or more) severe hypoglycemic episodes in the past 5 years. In each case, an endocrinologist verified that the driver has demonstrated a willingness to properly monitor and manage his/her diabetes mellitus, received education related to diabetes management, and is on a stable insulin regimen. These drivers report no other disqualifying conditions, including diabetes-related complications. Each meets the vision requirement at 49 CFR 391.41(b)(10).

The qualifications and medical condition of each applicant were stated and discussed in detail in the June 6, 2012, **Federal Register** notice and they will not be repeated in this notice.

Discussion of Comments

FMCSA did not receive any comments in this proceeding.

Basis for Exemption Determination

Under 49 U.S.C. 31136(e) and 31315, FMCSA may grant an exemption from the diabetes requirement in 49 CFR 391.41(b)(3) if the exemption is likely to achieve an equivalent or greater level of safety than would be achieved without the exemption. The exemption allows the applicants to operate CMVs in interstate commerce.

To evaluate the effect of these exemptions on safety, FMCSA considered medical reports about the applicants' ITDM and vision, and reviewed the treating endocrinologists' medical opinion related to the ability of the driver to safely operate a CMV while using insulin.

Consequently, FMCSA finds that in each case exempting these applicants from the diabetes requirement in 49 CFR 391.41(b)(3) is likely to achieve a level of safety equal to that existing without the exemption.

Conditions and Requirements

The terms and conditions of the exemption will be provided to the applicants in the exemption document

and they include the following: (1) That each individual submit a quarterly monitoring checklist completed by the treating endocrinologist as well as an annual checklist with a comprehensive medical evaluation; (2) that each individual reports within 2 business days of occurrence, all episodes of severe hypoglycemia, significant complications, or inability to manage diabetes; also, any involvement in an accident or any other adverse event in a CMV or personal vehicle, whether or not it is related to an episode of hypoglycemia; (3) that each individual provide a copy of the ophthalmologist's or optometrist's report to the medical examiner at the time of the annual medical examination; and (4) that each individual provide a copy of the annual medical certification to the employer for retention in the driver's qualification file, or keep a copy in his/her driver's qualification file if he/she is self-employed. The driver must also have a copy of the certification when driving, for presentation to a duly authorized Federal, State, or local enforcement official.

Conclusion

Based upon its evaluation of the 23 exemption applications, FMCSA exempts, Larry J. Anderson (MN), Kevin J. Blue (IL), Wade D. Calvin (WA), Carl A. Candelaria (NM), Owen R. Dossett (MS), David K. Dylak (IL), Jennifer A. Ferguson (SC), Michael E. Fritz (MN), Jason W. Griffith (KS), Lee A. Haerterich (WI), Eric W. Holland (CO), Richard P. Holmen (MN), Edward Jones (NJ), Paul A. Lacina (ND), Robert L. Lawson (SC), Richard N. Listro (FL), Bradley J. Moore (MO), Jeremy T. Newton (MO), Ross W. Petermann (MN), James W. Pickard, Jr. (CO), Robert G. Shane (NY), Randall J. Tatum (MA), and Curtis J. Young (FL) from the ITDM requirement in 49 CFR 391.41(b)(3), subject to the conditions listed under ''Conditions and Requirements'' above.

In accordance with 49 U.S.C. 31136(e) and 31315 each exemption will be valid for two years unless revoked earlier by FMCSA. The exemption will be revoked if the following occurs: (1) The person fails to comply with the terms and conditions of the 1/exemption; (2) the exemption has resulted in a lower level of safety than was maintained before it was granted; or (3) continuation of the exemption would not be consistent with the goals and objectives of 49 U.S.C. 31136(e) and 31315. If the exemption is still effective at the end of the 2-year period, the person may apply to FMCSA for a renewal under procedures in effect at that time.

Issued on: July 18, 2012.

Larry W. Minor,

Associate Administrator for Policy.

[FR Doc. 2012–17980 Filed 7–25–12; 8:45 am]

BILLING CODE 4910–EX–P

DEPARTMENT OF TRANSPORTATION

Federal Railroad Administration

Notice of Availability of a Supplemental Draft Environmental Impact Statement for the California High-Speed Train Project Fresno to Bakersfield Section

AGENCY: Federal Railroad Administration (FRA), United States Department of Transportation (DOT).

ACTION: Notice of Availability.

SUMMARY: FRA is issuing this notice to advise the public that a Supplemental Draft Environmental Impact Statement (EIS) has been prepared for the Fresno to Bakersfield Section of the California High-Speed Train (HST) Project (Project). FRA is the lead Federal agency and the California High-Speed Rail Authority (Authority) is the lead state agency for the environmental review process. The Supplemental Draft EIS was prepared by FRA and the Authority to meet the federal requirements of the National Environmental Policy Act (NEPA) and to serve as the Authority's Revised Draft Environmental Impact Report (EIR) in compliance with the state law requirements of the California Environmental Quality Act (CEQA). The U.S. Army Corps of Engineers (USACE) is a Cooperating Agency for the Supplemental Draft EIS.

DATES: Written comments on the Supplemental Draft EIS for the Fresno to Bakersfield Section should be provided to the Authority at the address listed below on or before September 20, 2012. Public hearings are scheduled on August 27, August 28, and August 29, 2012, at the times and dates listed in the Addresses Section below in Fresno, Hanford, and Bakersfield, CA.

ADDRESSES: Written comments on the Supplemental Draft EIS should be sent to the California High-Speed Rail Authority, EIR/EIS Comments, 770 L Street, Suite 800, Sacramento, CA 95814, or may be submitted online at *Fresno_Bakersfield@hsr.ca.gov.* Comments may also be provided orally or in writing at the public hearings scheduled at the following times and locations:

- Fresno, CA, Wednesday, August 29, 2012, 3:00 to 8:00 p.m., Fresno Convention Center, Exhibit Hall III, 848 M Street, Fresno, CA;
- Hanford, CA, Tuesday, August 28, 2012, 3:00 to 8:00 p.m., Hanford Fraternal Hall, 1015 N. 10th Avenue, Hanford, CA; and
- Bakersfield, CA, Monday, August 27, 2012, 3:00 to 8:00 p.m., Beale Memorial Library, 701 Truxton Avenue, Bakersfield, CA.

FOR FURTHER INFORMATION CONTACT: Mr. David Valenstein, Chief, Environment and Systems Planning Division, Office of Railroad Policy and Development, Federal Railroad Administration, U.S. Department of Transportation, 1200 New Jersey Avenue SE., MS–20, Washington, DC 20590 (telephone: 202–493–6368).

SUPPLEMENTARY INFORMATION: The proposed California HST system would provide intercity, high-speed passenger rail service on more than 800 miles of tracks throughout California, connecting the major population centers of Sacramento, the San Francisco Bay Area, the Central Valley, Los Angeles, the Inland Empire, Orange County, and San Diego. It will use state-of-the-art, electrically powered, high-speed, steel-wheel-on-steel-rail technology, including contemporary safety, signaling, and automated train-control systems, with trains capable of operating up to 220 miles per hour (mph) over a fully graded-separated, dedicated double track alignment. The HST System is comprised of multiple sections, one of which is the Fresno to Bakersfield Section analyzed in the Supplemental Draft EIS.

This project-level EIS tiers off of the Statewide Program EIR/EIS published by the Authority and the FRA in 2005 and builds off of subsequent decisions. The Fresno to Bakersfield Section is comprised of a 114-mile dedicated, double-track high-speed passenger rail corridor between Fresno and Bakersfield, CA. The Project includes proposed stations in downtown Fresno and Bakersfield, and a possible Kings/Tulare Regional Station in the vicinity of Hanford, CA. A heavy maintenance facility for assembly, testing, and commissioning of trains, train inspection and service, and train overhaul may be constructed in the Fresno to Bakersfield Section.

In August 2011, FRA issued a Draft EIS and circulated the document for a 60-day public and agency review and comment period. The Draft EIS analyzed a no action alternative and various action alternatives for the construction and operation of the California HST Project Fresno to Bakersfield Section, including alignment alternatives and station locations. FRA and Authority held three public hearings on the Draft

EIS held in Fresno, Hanford, and Bakersfield on September 20, September 21, and September 22, 2011 respectively to collect public comments.

Based on substantive comments received during the public and agency review of the Draft EIS, the Authority and FRA decided to reintroduce alignment alternatives west of Hanford. In response to concerns raised by stakeholders in metropolitan Bakersfield, the Authority and FRA also decided to evaluate another alternative in Bakersfield (Bakersfield Hybrid Alternative) in an effort to minimize impacts to residential and community facilities. The Authority and FRA determined that the introduction of these new alternatives and other refinements being considered for existing Fresno to Bakersfield route alternatives required preparation of a Supplemental Draft EIS under NEPA and a Revised Draft EIS under CEQA.

Consistent with the provisions of NEPA Section 102(2)(c) (42 U.S.C. 4321 *et seq.*), the Council on Environmental Quality (CEQ) regulations implementing NEPA (40 CFR parts 1500 *et seq.*), and FRA's Procedures for Considering Environmental Impacts (64 FR 28545, May 26, 1999), the Supplemental Draft EIS describes the Project's purpose and need, identifies the reasonable range of alternatives including the no action alternative, evaluates the potential environmental effects associated with those alternatives, and identifies mitigation measures to minimize potential environmental effects.

Copies of the Supplemental Draft EIS are available online at FRA's Web site: *www.fra.dot.gov;* the Authority's Web site: *www.cahighspeedrail.ca.gov;* and are also available for viewing at the following locations near the planned rail system:

- Fresno County Public Library, Central Branch, Central Reference Department, 2420 Mariposa Street, Fresno, CA;
- Fresno County Public Library, Clovis Regional Library, 1155 Fifth Street, Clovis, CA;
- Fresno County Public Library, Laton Branch, 6313 DeWoody Street, Laton, CA;
- Kern County Library, Beale Memorial Library, 701 Truxtun Avenue, Bakersfield, CA;
- Kern County Library, Corcoran Branch, 1001 Chittenden Avenue, Corcoran, CA;
- Kern County Library, Delano Branch, 925 10th Avenue, Delano, CA;
- Kern County Library, Shafter Branch, 236 James Street, Shafter, CA;
- Kern County Library, Wasco Branch, 1102 7th Street, Wasco, CA;
- Kings County Library, Hanford Branch (Main Library), 401 N. Douty Street, Hanford, CA;
- Kings County Library, Lemoore Branch, 457 C Street, Lemoore, CA;
- Tulare County Library, Visalia Branch (Main Library), 200 West Oak Avenue, Visalia, CA; and
- Tulare Public Library, 475 North M Street, Tulare, CA.

Issued in Washington, DC, on July 19, 2012.

Paul Nissenbaum,

Associate Administrator for Railroad Policy & Development.

[FR Doc. 2012–18305 Filed 7–25–12; 8:45 am]

BILLING CODE 4910–06–P

DEPARTMENT OF TRANSPORTATION

Federal Transit Administration

Intent To Prepare an Environmental Impact Statement for Proposed Transit Improvements to the North Red and Purple Lines, Cook County, IL

AGENCY: Federal Transit Administration, U.S. Department of Transportation.

ACTION: Supplemental Notice of Intent to Prepare an Environmental Impact Statement.

SUMMARY: On January 3, 2011, the Federal Transit Administration (FTA), as the lead federal agency, and the Chicago Transit Authority (CTA) published a Notice of Intent (NOI) to prepare an Environmental Impact Statement (EIS) for the North Red and Purple Line Modernization (RPM) Project in Cook County, Illinois. The purpose of this supplemental NOI is to inform interested parties that the EIS will no longer be a Tier 1 EIS as originally proposed. The methodology and format will now be a standard project-level EIS. All other aspects (Location, Purpose and Need, Alternatives, Scoping, and Possible Effects) of the original NOI remain unchanged. Activities conducted to date pursuant to the original NOI will not be impacted or reexamined. The proposed project, described more completely in the January 3, 2011 NOI, would bring the North Red and Purple lines up to a state of good repair from the track structure immediately north of Belmont Station in Chicago to the Linden terminal in Wilmette, Illinois. Materials describing the project purpose and need and the alternatives proposed for analysis are available on the CTA Web site *www.transitchicago.com/rpmproject.* The CTA operates the rapid transit system in metropolitan Chicago, Illinois.

ADDRESSES: Questions regarding this updated notice or the project may be sent to Mr. Steve Hands, Strategic Planning and Policy, Chicago Transit Authority, 567 W Lake Street, Chicago, IL 60661, or via email at *RPM@transitchicago.com.* The NOI of January 3, 2011 is available on the internet at *http://www.gpo.gov/fdsys/pkg/FR–2011–01–03/pdf/2010–33065.pdf.*

FOR FURTHER INFORMATION CONTACT: Mr. Reginald Arkell, Community Planner, Federal Transit Administration, Region V, 200 West Adams Street, Suite 320, Chicago, IL 60606, phone 312–886–3704, email *reginald.arkell@dot.gov.*

Issued on: July 17, 2012.

Rhonda Reed,

Deputy Regional Administrator.

[FR Doc. 2012–18268 Filed 7–25–12; 8:45 am]

BILLING CODE 4910–57–P

DEPARTMENT OF THE TREASURY

Office of Foreign Assets Control

Proposed Collection; Comment Request for Reporting, Procedures and Penalties Regulations

AGENCY: Office of Foreign Assets Control, Treasury.

ACTION: Notice and request for comments.

SUMMARY: The Department of the Treasury, as part of its continuing effort to reduce paperwork and respondent burden, invites the general public and other Federal agencies to comment on proposed and/or continuing information collections, as required by the Paperwork Reduction Act of 1995, Public Law 104–13 (44 U.S.C. 3506(c)(2)(A)). Currently, the Office of Foreign Assets Control (''OFAC'') within the Department of the Treasury is soliciting comments concerning OFAC's information collection requirements contained within OFAC's Reporting, Procedures and Penalties Regulations set forth at 31 CFR part 501.

DATES: Written comments must be submitted on or before September 24, 2012 to be assured of consideration.

ADDRESSES: You may submit comments by any of the following methods:

Federal eRulemaking Portal: www.regulations.gov.

Follow the instructions on the Web site for submitting comments.

Fax: Attn: Request for Comments (Reporting, Procedures and Penalties Regulations) (202) 622–1657.

Mail: Attn: Request for Comments (Reporting, Procedures and Penalties

Regulations). Office of Foreign Assets Control, Department of the Treasury, 1500 Pennsylvania Avenue NW., Washington, DC 20220.

Instructions: All submissions received must include the agency name and the **Federal Register** Doc. number that appears at the end of this document. Comments received will be made available to the public via regulations.gov or upon request, without change and including any personal information provided.

FOR FURTHER INFORMATION CONTACT: Assistant Director for Sanctions Compliance & Evaluation, tel.: 202/622–2490, Assistant Director for Licensing, tel.: 202/622–2480, Assistant Director for Policy, tel.: 202/622–4855, Office of Foreign Assets Control, or Chief Counsel (Foreign Assets Control), tel.: 202/622–2410, Office of the General Counsel, Department of the Treasury (not toll free numbers).

SUPPLEMENTARY INFORMATION:

Title: Reporting, Procedures and Penalties Regulations.

OMB Control Number: 1505–0164.

Abstract: The collections of information are contained in sections 501.601 through 501.605, 501.801, and 501.804 through 501.807 and pertain to the operation of various economic sanctions programs administered by OFAC under 31 CFR chapter V. Section 501.601 relates to the maintenance of records and section 501.602 relates to OFAC demands for information relative to any transaction or property subject to the provisions of 31 CFR chapter V. Section 501.603 imposes reporting requirements pertaining to blocked property and retained funds. This information is required by OFAC to monitor compliance with regulatory requirements, to support diplomatic negotiations concerning the targets of sanctions, and to support settlement negotiations addressing U.S. claims. Section 501.604 requires the filing of reports for compliance purposes by financial institutions where a funds transfer is not required to be blocked but where processing the transfer would nonetheless violate, or facilitate a transaction that is prohibited under, other provisions in 31 CFR chapter V. Section 501.605 requires reporting of information pertaining to litigation, arbitration, and other binding alternative dispute resolution proceedings in the United States to prevent the intentional or inadvertent transfer through such proceedings of blocked property or retained funds. Sections 501.801, 501.804, and 501.805 relate, respectively, to license requests; rulemakings; and records requests. Section 501.806 sets forth the procedures to be followed by a person seeking to have funds released at a financial institution if the person believes that the funds were blocked due to mistaken identity. Section 501.807 sets forth the procedures to be followed by a person seeking administrative reconsideration of his, her, or its designation or of a vessel as blocked, or who wishes to assert that the circumstances resulting in the designation or blocking no longer apply.

The likely respondents and record-keepers affected by the information collections contained in part 501 are financial institutions, business organizations, individuals, and legal representatives. The estimated total annual reporting and/or recordkeeping burden is approximately 47,780 hours. The estimated annual burden per respondent/record-keeper varies from 30 minutes to 10 hours, depending on individual circumstances, with an estimated average of 1.25 hours. The estimated number of respondents and/or record-keepers is 38,224. The estimated annual frequency of responses: 1–12.

Current Actions: There are no changes being made to the notice at this time.

Type of Review: Extension of a currently approved collection.

Affected Public: Financial institutions, business organizations, individuals, and legal representatives.

Estimated Number of Respondents: 38,224.

Estimated Time per Respondent: 1.25 hours.

Estimated Total Annual Burden Hours: 47,780.

The following paragraph applies to all of the collections of information covered by this notice:

An agency may not conduct or sponsor, and a person is not required to respond to, a collection of information unless the collection of information displays a valid Office of Management and Budget (''OMB'') control number.

Request for Comments

Comments submitted in response to this notice will be summarized and/or included in the request for OMB approval. All comments will become a matter of public record. Comments are invited on: (a) Whether the collection of information is necessary for the proper performance of the functions of the agency, including whether the information has practical utility; (b) the accuracy of the agency's estimate of the burden of the collection of information; (c) ways to enhance the quality, utility, and clarity of the information to be collected; (d) ways to minimize the burden of the collection of information on respondents, including through the use of automated collection techniques or other forms of information technology; and (e) estimates of capital or start-up costs and costs of operation, maintenance, and purchase of services to provide information.

Dated: July 20, 2012.

Robert Dahl,

Treasury Departmental Clearance Officer.

[FR Doc. 2012–18251 Filed 7–25–12; 8:45 am]

BILLING CODE 4810–25–P

FEDERAL REGISTER

Vol. 77 Thursday,

No. 144 July 26, 2012

Part II

Department of the Interior

Fish and Wildlife Service

50 CFR Part 17

Endangered and Threatened Wildlife and Plants; Endangered Status for the Diamond Darter and Designation of Critical Habitat; Proposed Rule

DEPARTMENT OF THE INTERIOR

Fish and Wildlife Service

50 CFR Part 17

[FWS–R5–ES–2012–0045; 4500030113]

RIN 1018–AY12

Endangered and Threatened Wildlife and Plants; Endangered Status for the Diamond Darter and Designation of Critical Habitat

AGENCY: Fish and Wildlife Service, Interior.

ACTION: Proposed rule.

SUMMARY: We, the U.S. Fish and Wildlife Service, propose to list the diamond darter (*Crystallaria cincotta*) as endangered under the Endangered Species Act of 1973, as amended (Act); and propose to designate critical habitat for the species. In total, approximately 197.1 river kilometers (122.5 river miles) are being proposed for designation as critical habitat. The proposed critical habitat is located in Kanawha and Clay Counties, West Virginia, and Edmonson, Hart, and Green Counties, Kentucky.

DATES: We will consider comments received or postmarked on or before September 24, 2012. Comments submitted electronically using the Federal eRulemaking Portal (see **ADDRESSES** section, below) must be received by 11:59 p.m. Eastern Time on the closing date. We must receive requests for public hearings, in writing, at the address shown in the **ADDRESSES** section by September 10, 2012.

ADDRESSES: You may submit comments by one of the following methods:

(1) *Electronically:* Go to the Federal eRulemaking Portal: *http://www.regulations.gov.* In the Keyword box, enter Docket No. FWS–R5–ES–2012–0045, which is the docket number for this rulemaking. Then, in the Search panel on the left side of the screen, under the Document Type heading, click on the Proposed Rules link to locate this document. You may submit a comment by clicking on ''Send a Comment or Submission.''

(2) *By hard copy:* Submit by U.S. mail or hand-delivery to: Public Comments Processing, Attn: FWS–R5–ES–2012–0045; Division of Policy and Directives Management; U.S. Fish and Wildlife Service; 4401 N. Fairfax Drive, MS 2042–PDM; Arlington, VA 22203.

We request that you send comments only by the methods described above. We will post all comments on *http://www.regulations.gov.* This generally means that we will post any personal information you provide us (see the Public Comments section below for more information).

The coordinates or plot points or both from which the maps are generated are included in the administrative record for this critical habitat designation and are available at (*http://www.fws.gov/westvirginiafieldoffice/index.html*), *www.regulations.gov* at Docket No. FWS–R5–ES–2012–0045, and at the West Virginia Field Office (see **FOR FURTHER INFROMATION CONTACT**). Any additional tools or supporting information that we may develop for this critical habitat designation will also be available at the above locations.

FOR FURTHER INFORMATION CONTACT: Deborah Carter, Field Supervisor, U.S. Fish and Wildlife Service, West Virginia Field Office, 694 Beverly Pike, Elkins, WV 26241, by telephone (304) 636–6586 or by facsimile (304) 636–7824. Persons who use a telecommunications device for the deaf (TDD) may call the Federal Information Relay Service (FIRS) at 800–877–8339.

SUPPLEMENTARY INFORMATION:

Executive Summary

Why we need to publish a rule. Under the Endangered Species Act (Act), a species may warrant protection through listing if it is endangered throughout all or a significant portion of its range. We are proposing to list the diamond darter as endangered under the Act because of continued threats, and listing can only be done by issuing a rule. The diamond darter occurs as a single population in the Elk River in West Virginia. We are also proposing to designate critical habitat under the Act for the species. Critical habitat represents geographical areas that are essential to a species' conservation, and is designated on the basis of the best scientific information available after taking into consideration the economic impact, impact on national security, and any other relevant impact of specifying any particular area as critical habitat. A forthcoming draft economic analysis will evaluate the potential economic impacts that may be attributable to the proposed designation of critical habitat for the species.

The basis for our action. Under the Act, a species may be determined to be endangered or threatened based on any of five factors: (1) The present or threatened destruction, modification, or curtailment of its habitat or range; (2) overutilization for commercial, recreational, scientific, or educational purposes; (3) disease or predation; (4) the inadequacy of existing regulations; or (5) other natural or manmade factors affecting its continued existence. The Act also requires that we designate critical habitat concurrently with listing determinations, if designation is prudent and determinable.

We have made the following finding related to these criteria:

- Diamond darter is endangered by water quality degradation; habitat loss; inadequate existing regulatory mechanisms; a small population size that makes the species vulnerable to the effects of the spread of an invasive alga (*Didymosphenia geminate);* loss of genetic fitness; and catastrophic events, such as oil and other toxic spills.

This rule proposes to designate critical habitat for the diamond darter.

- Critical habitat designation would not be expected to increase threats to the species, and we have sufficient scientific information on the diamond darter to determine the areas essential to, and essential for, its conservation. Accordingly, we have determined the designation of critical habitat is both prudent and determinable.
- In total, we propose to designate approximately 197.1 river kilometers (122.5 miles) as critical habitat. The proposed critical habitat is located in Kanawha and Clay Counties, West Virginia, and Edmonson, Hart, and Green Counties, Kentucky.
- Based on our interpretation of directly regulated entities under the Regulatory Flexibility Act and relevant case law, this designation of critical habitat will only directly regulate Federal agencies, which are not by definition small business entities. However, though not necessarily required by the Regulatory Flexibility Act, in our draft economic analysis for this proposal, we will consider and evaluate the potential effects to third parties that may be involved with consultations with Federal action agencies related to this action.

Peer Review. We will seek the expert opinions of at least three appropriate and independent specialists with scientific expertise to ensure our determinations are based on scientifically sound data, assumptions, and analyses.

Information Requested

We intend that any final action resulting from this proposed rule will be based on the best scientific and commercial data available and be as accurate and as effective as possible. Therefore, we request comments or information from the public, other concerned governmental agencies, Native American tribes, the scientific community, industry, or any other interested parties concerning this

proposed rule. We particularly seek comments concerning:

(1) Biological, commercial trade, or other relevant data concerning any threats (or lack thereof) to this species and regulations that may be addressing those threats.

(2) Additional information concerning the historical and current status, range, distribution, and population size of this species, including the locations of any additional populations of this species.

(3) The factors that are the basis for making a listing determination for a species under section 4(a) of the Act, which are:

(a) The present or threatened destruction, modification, or curtailment of its habitat or range;

(b) Overutilization for commercial, recreational, scientific, or educational purposes;

(c) Disease or predation;

(d) The inadequacy of existing regulatory mechanisms; or

(e) Other natural or manmade factors affecting its continued existence.

(4) Any information on the biological or ecological requirements of the species and ongoing conservation measures for the species and its habitat.

(5) Current or planned activities in the areas occupied by the species and possible impacts of these activities on this species.

(6) The reasons why we should or should not designate habitat as ''critical habitat'' under section 4 of the Act (16 U.S.C. 1531 *et seq.*) including whether there are threats to the species from human activity, the degree of which can be expected to increase due to the designation, and whether that increase in threat outweighs the benefit of designation such that the designation of critical habitat may not be prudent.

(7) Specific information on:

(a) The amount and distribution of diamond darter habitat;

(b) What areas, that were occupied at the time of listing (or are currently occupied) and that contain features essential to the conservation of the species, should be included in the designation and why;

(c) Special management considerations or protection that may be needed in critical habitat areas we are proposing, including managing for the potential effects of climate change; and

(d) What areas not occupied at the time of listing are essential for the conservation of the species and why.

(8) Land use designations and current or planned activities in the subject areas and their possible impacts on proposed critical habitat.

(9) Information on the projected and reasonably likely impacts of climate change on the diamond darter and proposed critical habitat.

(10) Any probable economic, national security, or other relevant impacts of designating any area that may be included in the final designation; in particular, any impacts on small entities or families, and the benefits of including or excluding areas that exhibit these impacts.

(11) Whether any specific areas we are proposing for critical habitat designation should be considered for exclusion under section 4(b)(2) of the Act, and whether the benefits of potentially excluding any specific area outweigh the benefits of including that area under section 4(b)(2) of the Act.

(12) Whether we could improve or modify our approach to designating critical habitat in any way to provide for greater public participation and understanding, or to better accommodate public concerns and comments.

Please note that submissions merely stating support for or opposition to the action under consideration without providing supporting information, although noted, will not be considered in making a determination, as section 4(b)(1)(A) of the Act directs that determinations as to whether any species is a threatened or endangered species must be made solely on the basis of the best scientific and commercial data available, and section 4(b)(2) directs that critical habitat designations be made based on the best scientific data available and after consideration of economic, national security, and other relevant impacts.

You may submit your comments and materials concerning this proposed rule by one of the methods listed in the **ADDRESSES** section. We request that you send comments only by the methods described in **ADDRESSES**.

If you submit information via *http://www.regulations.gov,* your entire submission—including any personal identifying information—will be posted on the Web site. If your submission is made via a hardcopy that includes personal identifying information, you may request at the top of your document that we withhold this information from public review. However, we cannot guarantee that we will be able to do so. We will post all hardcopy submissions on *http://www.regulations.gov.* Please include sufficient information with your comments to allow us to verify any scientific or commercial information you include.

Comments and materials we receive, as well as supporting documentation we used in preparing this proposed rule, will be available for public inspection on *http://www.regulations.gov,* or by appointment, during normal business hours, at the U.S. Fish and Wildlife Service, West Virginia Field Office (see **FOR FURTHER INFORMATION CONTACT**).

Previous Federal Actions

The diamond darter was first identified as a candidate for protection under the Act in the November 9, 2009, **Federal Register** (74 FR 57804). As a candidate, it was assigned a listing priority number (LPN) of 2. Candidate species are assigned LPNs based on the magnitude and immediacy of threats, as well as their taxonomic status. The lower the LPN, the higher priority that species is for us to determine appropriate action using our available resources. An LPN of 2 reflects threats that are both imminent and high in magnitude, as well as the taxonomic classification of the diamond darter as a full species. We retained the LPN of 2 in our subsequent Notices of Review dated November 10, 2010 (75 FR 69222) and October 26, 2011 (76 FR 66370).

Status Assessment for Diamond Darter

Background

It is our intent to discuss below only those topics directly relevant to the proposed listing of the diamond darter as endangered in this section of the proposed rule. A summary of topics relevant to this proposed rule is provided below. Additional information on this species may be found in the Candidate Notice of Review, which was published October 26, 2011 (76 FR 66370).

Species Description

The diamond darter (*Crystallaria cincotta*) is a member of the perch family (Percidae), a group characterized by the presence of a dorsal (top) fin separated into two parts, one spiny and the other soft (Kuehne and Barbour 1983, p. 1). The darters differ from other percids in being much smaller in overall size and having a more slender shape. Some darters, including those in the genus *Crystallaria,* lack a swim bladder. This characteristic increases the density of the fish and facilitates their ability to remain near the bottom of their riverine habitats with little effort (Evans and Page 2003, p. 64).

The diamond darter is overall translucent and is a silvery white on the under side of the body and head and has four wide, olive-brown saddles on the back and upper side (Welsh *et al.* 2008, p. 1). Between the saddles, olive-brown colored pigments on the scale margins produce a fragmented cross-hatch pattern. A blotch under and in front of the eyes is dark and distinctly separated

from the front margin of the orbital rim around the eye. The side coloration includes 12 to 14 oblong, olive-brown blotches overlain by an iridescent, olive-green stripe. Fins are clear with the exception of sparse pigmentation on the tail fin.

Documented standard lengths measured from the tip of the snout to the beginning of the tail fin range from 73 to 77.3 millimeters (mm) (2.9 to 3.0 inches [in]) (Welsh and Wood 2008, pp. 64–66).

Characteristics that distinguish the diamond darter from the related crystal darter (*C. asprella*) that occurs in freshwater rivers in the Gulf Coast States of Alabama, Florida, Louisiana, and Mississippi, and in the Mississippi and Wabash rivers, include: the width of the mouth when opened is larger and is approximately equal to or exceeding the width between the pelvic fins; a blotch under and in front of the eyes that is distinctly separate from the front of the orbital rim; a pair of fins located on the underside of the fish near the pelvis girdle (pelvic fins) that are distinctly curved like a sickle in both sexes; a reduced number of cheek scale rows (most frequently 2); a reduced number of scale rows (most frequently 2) on the opercle, which is a bone near the gills; a high count of mid-lateral blotches (most frequently 13); a low count of rays (most frequently 13) on the anal fin (a single fin located on the underside of the fish behind the anus); a low count of dorsal-fin spines (most frequently 12), and a high count of scales (most frequently 11) below the lateral line, which is a sense organ fish use to detect movement and vibration in the surrounding water (Welsh and Wood 2008, p. 66).

Taxonomy

Previously, *Crystallaria* was regarded as a subgenus within *Ammocrypta* (Cincotta and Hoeft, 1987, p. 133; Simons 1991, p. 934). However, in an evaluation of the species' evolutionary development based on morphology, Simons (1991) elevated *Crystallaria* to a separate genus. This taxonomic treatment has been adopted in other subsequent works (Page and Burr 1991, Simons 1992, and Wiley 1992 in NatureServe 2008, p. 1). Allozyme data (variant forms of enzymes that are coded by different forms of a gene at the same gene locus) also seem consistent with this taxonomy (Wood and Mayden 1997, pp. 267–268).

When the diamond darter was first collected from the Elk River, West Virginia, in 1980, the specimen was identified and reported as the crystal darter (*Crystallaria* ne: *Ammocrypta asprella*) (Cincotta and Hoeft 1987, pp. 133–136). This was the first collection of this species from the Ohio River Basin in 41 years and the first time it was ever collected in West Virginia (Cincotta and Hoeft 1987, p. 133). Although the diagnostic characteristics of the specimen were within those described for the crystal darter by Page (1983), even at the time of collection some researchers believed that the species, as then recognized, actually constituted more than one subspecies or species (Cincotta and Hoeft 1987, p. 134), particularly given the disjunct nature of existing crystal darter populations.

In order to explore this possibility, Wood and Raley (2000) evaluated the genetic variation of five crystal darter populations by sequencing a specific gene referred to as the cytochrome b gene. Individuals were evaluated from populations in the Pearl River in Louisiana, the Cahaba River in Alabama, the Saline River in Arkansas, the Zumbro River in Minnesota, and the Elk River in West Virginia. This analysis was conducted on these crystal darter specimens, as well as individuals from eight other darter species (Wood and Raley 2000, p. 20). This study found that there was an 11.2 to 11.8 percent difference between the cytochrome b sequence of the Elk River crystal darter population and all other crystal darter populations evaluated (Wood and Raley 2000, p. 24). This was one of the highest differences in cytochrome b ever reported for a fish species (Wood and Raley 2000, p. 24), and was more typical of differences between species or genera rather than subspecies (Wood and Raley 2000, p. 24).

Because differentiation observed at a single gene region is generally not considered sufficient evidence to establish taxonomic status, additional genetic and physical analyses were initiated by Morrison *et al.* (2006, p. 129). In that study, the authors sampled individuals from the same five disjunct crystal darter populations previously surveyed and compared genetic variation between these populations using additional genetic markers referred to as the mitochondrial control region (mtDNA CR) and nuclear S7 ribosomal gene (Morrison *et al.* 2006, p. 129). In addition, morphometric (a technique of taxonomic analysis using measurements of the form of organisms) measurements and meristic (divided into segments) counts between individuals from these populations were compared (Morrison *et al.* 2006, p. 130). Meristics are systematic counts of fish characteristics such as the number of scales along the lateral line or the number of rays in the anal fin. The results of this study confirmed the conclusions of Wood and Raley (2000, pp. 20–26) in regard to the Elk River population. The magnitude of divergence between the Elk River population and the other populations sampled, as estimated from mtDNA CR data, was similar in magnitude to mtDNA divergences measured between recognized species of darters and was an order of magnitude greater than some mtDNA CR divergence estimates for recognized subspecies (Morrison *et al.* 2006, p. 139). Morphometric data were also consistent with molecular data regarding the distinctiveness of the Elk River population (Morrison *et al.* 2006, p. 129). The study concluded that the Elk River group likely constituted a distinct species (Morrison *et al.* 2006, p. 143).

Welsh and Wood (2008) conducted additional morphological comparisons between *Crystallaria* populations from 18 rivers within the Ohio River Drainage; the upper, middle, and lower Mississippi River drainages; and the Gulf Coast (Welsh and Wood 2008, p. 63). This evaluation included specimens from extant populations, as well as museum specimens from currently extirpated populations that were gathered during the late 1800s to early 1900s. Nine specific morphological characteristics were identified that distinguish the Elk River population from other populations of the crystal darter (see Species Description section). Based on the results of this analysis, and the previous genetic studies, Welsh and Wood (2008, pp. 62–68) formally named and described the Elk River population of the crystal darter as a separate and distinct species, the diamond darter (*Crystallaria cincotta*) (Welsh and Wood 2008, pp. 62–68). Welsh and Wood (2008, pp. 62–68) further identified that specimens from extirpated populations within the Cumberland, Green, and Muskingum Rivers within the Ohio River Basin were consistent with the characteristics defined for the diamond darter, thus establishing the extent of the species' historical range. The crystal darter's current range, as described above, does not appear to overlap with the diamond darter's current or historical range (Grandmaison *et al.* 2003, p. 6; Welsh and Wood 2008, pp. 62–68).

We carefully reviewed the available taxonomic information summarized above and conclude that the species is a valid taxon based upon considerations of genetic and morphological characteristics.

Life History and Habitat

Due to its rarity, little research exists on the natural history of this species (Osier 2005, p. 10). However, in some cases, potential characteristics can be inferred from the information available on the closely related crystal darter, as noted below.

The diamond darter is a species that inhabits medium to large, warmwater streams with moderate current and clean sand and gravel substrates (Simon and Wallus 2006, p. 52). In the Elk River, the diamond darter has been collected from riffles and pools where swift currents result in clean swept, predominately sand and gravel substrates that lack silty depositions (Osier 2005, p. 11).

Diamond darters are more often collected at dusk or during the night and are likely crepuscular (more active at dusk and dawn) (Welsh 2008, p. 10). They may stay partially buried in the sand during the day and then come out to feed during the night (Welsh 2009c, p. 1). Adult diamond darters are benthic invertivores, feeding primarily on stream bottom-dwelling invertebrates (NatureServe 2008, p. 8). They may use an ambush foraging tactic by burying in the sand and darting out at prey (Robinson 1992 and Hatch 1997 in Osier 2005, pp. 12–13; NatureServe 2008, p. 1). The large teeth seen in juvenile diamond darters hatched in captivity suggest that young diamond darters may feed on other smaller fish larvae (Ruble *et al.* 2010, p. 15). However, because no juveniles have been successfully reared to adulthood, this has not been confirmed. The juveniles may also eat zooplankton prey, which is a more typical behavior for pelagic (drifting in open water) larval percids (Rakes 2011, p. 1).

Very little information is available on the reproductive biology and early life history of the diamond darter (Welsh *et al.* 2008, p. 1; Ruble and Welsh 2010, p. 1). When maintained in captivity, females began to show signs of being gravid from late March to May. Spawning likely occurs mid-April to May, and larvae hatch within 7 to 9 days afterward (Ruble *et al.* 2010, pp. 11–12). Males appear to guard spawning territories, but no guarding of eggs has been observed in captivity (Ruble 2012, p. 1)

If the diamond darter's reproductive behavior is similar to crystal darters in the wild, then females may be capable of multiple spawning events and producing multiple clutches of eggs in one season (George *et al.* 1996, p. 75). Crystal darters lay their eggs in side channel riffle habitats over sand and gravel substrates in moderate current. Adult crystal darters do not guard their eggs (Simon and Wallus 2006, p. 56). Embryos develop in the clean interstitial spaces of the coarse substrate (Simon and Wallus 2006, p. 56). After hatching, the larvae are pelagic and drift within the water column (Osier 2005, p. 12; Simon and Wallus 2006, p. 56; NatureServe 2008, p. 1). See the discussion under Critical Habitat Designation—Physical and Biological Features below under ''Sites for Breeding, Reproduction, or Rearing (or Development) of Offspring'' for additional information.

Life expectancy of diamond darters is unknown in the wild. Diamond darters have been maintained in captivity for 2 years. During that time, it is suspected that one adult female died due to senescence (old age). Because she was brought into captivity as an adult (approximately 2 years old) it is suspected that she was 4 years or older at death (Ruble 2011b, p. 1). Life expectancy for the crystal darter has been reported to range from 2 to 4 years (Osier 2005, pp. 10–11), although some authors have suggested the potential to live up to 7 years (Simon and Wallus 2006, p. 52). In Arkansas, sexual maturity for the crystal darter may occur during the first year, with the first spawning event occurring the season after hatching. However, in the Ohio River Basin this may not occur until age 3 (George *et al.* 1996, p. 75; Simon and Wallus 2006, p. 52). Reported differences in age and size at maturity between northern and southern populations of crystal darters have been attributed to environmental differences, such as flow regimes, photoperiod, and temperature, with southern populations maturing and reproducing at an earlier age and thus having shorter lifespans (George *et al.* 1996, pp. 75–76).

Species Distribution and Status

Historical Range/Distribution

As shown in Table 1 below, historical records of the species indicate that the diamond darter was distributed throughout the Ohio River Basin and that the range included the Muskingum River in Ohio; the Ohio River in Ohio, Kentucky and Indiana; the Green River in Kentucky; and the Cumberland River Drainage in Kentucky and Tennessee. There is some difference of opinion as to how common the species was during the early portions of the 1900s. Trautman (1981, p. 645) suggests that it is quite probable that before 1900 the species was well distributed in the lower reaches of the southern Ohio tributaries and the Ohio River. However in 1892, Woolman (in Cicerello 2003, p. 6) noted that the species was likely neither widely distributed, nor common anywhere in Kentucky.

TABLE 1—Historical diamond darter collections.

Date	State	River	General Location	Citation	Notes
1888	OH	Muskingum	near Beverly, Washington Co.	Trautman 1981, p. 645; Kibbey 2008, p. 1	*
1899	OH/KY	Ohio	near Ironton, Lawrence Co., OH/Greenup Co., KY	Trautman 1981, p. 645; Kibbey 2008, p. 1; Clay 1975 p. 315; KSNPC 1991, p. 1	*
pre-1899	KY/IN	Ohio	near Rising Sun, IN; Boone Co., KY	Jordan 1899 in KSNPC 1991, p. 3	
1890	KY	Green River	near Greensburg, Green Co.	Clay 1975, p. 314; KSNPC 1991, pp. 4 & 5	2 collected*
1929	KY	Green River	Mammoth Cave, Edmonson Co.	Clay 1975, p. 315; KSNPC 1991, p. 6	2 collected*
1890s	KY	Cumberland	near Kuttawa, Lyon Co.	KSNPC 1991, p. 2; Burr and Warren 1986, p. 285	*
1939	TN	Cumberland	Clay Co.	Shoup *et al.* 1941 in Etnier and Starnes 1993, p. 443	
1939	TN	Roaring River (tributary to Cumberland River)	Jackson Co.	Shoup *et al.* 1941 in Etnier and Starnes 1993, p. 443	
1870	TN/KY	Big South Fork of the Cumberland	Scotts Co., TN near KY State border	Comiskey and Entier 1972 in Entier and Starnes 1993, p. 443	

** These specimens are currently available in museums and were confirmed as C. cincotta in the analysis that described and differentiated between that species and C. asprella (Welch and Wood, 2008). The other specimens are no longer available and/or could not be located. It is assumed that these occurrences are also C. cincotta because they occur within the watershed upstream of and/or in close proximity to other confirmed specimens of the species.*

Current Range/Distribution

The species is currently known to exist only within the lower Elk River in Kanawha and Clay Counties, West Virginia, and is considered extirpated from the remainder of the Ohio River Basin (Cicerello 2003, p. 3; Welsh and Wood 2008, pp. 62, 68). The species was first collected from the Elk River in November 1980, when one individual was collected during boat electroshocking surveys conducted near Mink Shoals in Kanawha County (Cincotta and Hoeft 1987, p. 133). This collection marked the rediscovery of the species in the Ohio River Basin, where it formerly had been considered extirpated from all states in which it had previously been recorded (Cincotta and Hoeft 1987, pp. 133–134). The species has not been collected since 1899 in Ohio, 1929 in Kentucky, and 1939 in Tennessee (Grandmaison *et al.* 2003, p. 6).

Trautman (1981, p. 645) suggests that increased silt load and subsequent smothering of suitable habitats likely caused the extirpation of the species from the State of Ohio by 1925 and that ''the habitat of few other Ohio fishes seemed so vulnerable to annihilation'' (Trautman 1981, p. 646). In addition, researchers at the Ohio State University have conducted extensive sampling in the Ohio River and its tributaries, starting with Ed Wickliff in the 1920s and continuing through the present (Kibbey 2008, p. 1; Ohio State University 2008, p. 1). Despite semiannual survey efforts in likely diamond darter habitats, such as the riffles below Devola Dam on the Muskingum River, no additional diamond darters have been located

(Kibbey 2008, p. 1). The Midwest Biodiversity Institute has also conducted recent surveys in the Muskingum River using both trawls and electroshocking. These surveys also failed to locate any *Crystallaria* species (Kibbey 2008, p. 1). Furthermore, despite conducting over 20,000 individual sampling events at over 10,000 locations throughout the State of Ohio, including sampling in both large rivers and small creeks, the Ohio Environmental Protection Agency has never collected any *Crystallaria* species (Mishne 2008, p. 1). As a result of these efforts, the species is considered extirpated from both the State of Ohio and the Ohio River (Mishne 2008, p. 1; Trautman 1981, p. 646). Pearson and Krumholtz (1984, p. 252) state that the chances of the diamond darter currently being present in the entire mainstem Ohio River are ''remote at best.''

The species is also considered extirpated from Kentucky (Burr and Warren 1986, p. 285; Evans 2008b, p. 1). Kentucky has been fairly well surveyed by numerous researchers without resulting in any recent collections of the species (Evans 2008, p. 1). All historical Green River sites have been repeatedly but unsuccessfully sampled for the diamond darter (Cicerello 2003, p. 6). Both the Kentucky State Nature Preserves Commission (KSNPC) and Southern Illinois University have conducted surveys targeting the species throughout the upper portion of the Green River Basin (Cicerello 2003, p. 6). Most recently in 2007, the Kentucky Department of Fish and Wildlife Resources, the Missouri Department of Conservation, and KSNPC sampled below Lock and Dam 5 and 6 on the Green River, as well as in river reaches downstream of the dams using a Hertzog trawl (Evans 2008a, p. 1). The Kentucky Department of Fish and Wildlife Resources has also done some site monitoring in the Green River at three sites below Green River dam and has not collected the species.

The diamond darter has not been documented to occur in Tennessee since 1939, and all previous records of the species within the State were from the Cumberland River Drainage (Etnier and Starnes 1993, p. 443). Starting in the 1950s, dams were installed on the mainstem Cumberland River that impounded much of its entire length from Barkley Dam in Kentucky to Cumberland Falls near the headwaters (Tennessee Wildlife Resources Agency (TWRA) 2005, p. 14). This dramatically altered most of the riverine habitat qualities that made the river suitable for the diamond darter and likely resulted in the extirpation of the species (Etnier and Starnes, 1993, p. 443; TWRA 2005, p. 14; Saylor, 2009, p. 1). Cold water discharges from many of these dams have changed the natural temperature regimes so that the river no longer functions as a warmwater fishery (TWRA 2005, p. 14; Fiss 2009, p. 1).

In addition, when the Cumberland River impoundments were being constructed, a fish barrier was installed near the mouth of the Roaring River in order to keep species that might frequent the impoundments, such as carp, from moving into the Roaring River, thus impeding any connectivity between the two systems (Fiss 2009, p. 1). Surveys in the Roaring River between 1972 and 1986 noted a loss of silt-intolerant fish species and increased disturbance from activities such as gravel dredging, highway construction, and poor agricultural practices that were degrading habitat quality in the stream. Although these surveys included the reach of river where *Crystallaria* had previously been documented, no diamond darters were captured during this effort (Crumby *et al.* 1990, pp. 885–891).

Surveys conducted in 1939 in the Big South Fork Cumberland River near where *Crystallaria* was previously documented noted that chemical conditions of the drainage were so adverse to biological productivity that the waters of the region are comparatively barren in contrast to surrounding regions (Shoup and Peyton 1940, p. 106). Comprehensive fisheries surveys were conducted in the Big South Fork Cumberland River from 2003 to 2006. Collection methods included backpack electroshocking, seines, dip nets, snorkeling, boat shocking, gill nets, and minnow traps (Scott 2007, p. 2). No *Crystallaria* were documented during this effort and the report concludes that the species is one of six that will likely never be encountered in the area due to extinction, extirpation, and being isolated from downstream populations by Wolf Creek Dam (Scott 2007, p. 21). Those surveys document that water quality within the Big South Fork Cumberland River has improved since the 1970's and that fish-diversity in the system is in the process of recovery (Scott 2007, pp. 14–19).

Currently, the Cumberland River watershed is subject to threats to water quality from inadequate pasture and grazing management practices, forest clearing, heavy navigation and recreational use, active mining, historical mining and acid mine drainage issues, oil and gas drilling, lack of riparian buffers, and poor stormwater and wastewater management (TWRA 2005, pp. 135–136). Despite these threats, the Cumberland aquatic region still contains some of the most diverse populations of fish, mussel, and crayfish species in North America (TWRA 2005, p. 14), and some ichthyologists have suggested that there is a ''remote possibility'' that the diamond darter may still exist in the cleaner large tributaries of the Cumberland or the lower Tennessee rivers (Etnier and Starnes 1993, p. 444). Therefore, some targeted sampling may be warranted (Fiss 2009, p. 1). The TWRA has conducted 111 fish survey samples from 1996 to 2007 throughout the Cumberland River system, although the gear used during some of these surveys was not targeted towards capturing the diamond darter (Fiss 2009, p. 1),, and has no recent records of recent diamond darter captures (Kirk 2009, p. 1). Despite extensive sampling in the Duck River, as well as the Blood and Big Sandy Rivers, there are no current or historical records of the diamond darter in those rivers either (Saylor 2009, p. 1).

Population Estimates/Status

Although there is currently not sufficient information available to develop an overall population estimate for the species, the results of numerous survey efforts confirm that the species is extremely rare. Fish surveys have been conducted in the Elk River in 1936, 1971, 1973, 1978 to 1983, 1986, 1991, 1993, 1995, 1996, and every year since 1999 (Welsh *et al.* 2004, pp. 17–18; Welsh 2008, p. 2; Welsh 2009a, p. 1). Survey methods included backpack and boat electrofishing, underwater observation, kick seines, and bag seines (Welsh *et al.* 2004, p. 4). Starting in early 1990s, the timing of sampling and specific methods used were targeted towards those shown to be effective at capturing similar darter species during previous efforts (Welsh *et al.* 2004, pp. 4–5; Hatch 1997, Shepard *et al.* 1999, and Katula 2000 in Welsh *et al.* 2004, p. 9; Ruble 2011a, p. 1). Despite these extensive and targeted survey efforts within the species' known range and preferred habitat in the Elk River, fewer than 50 individuals have been collected over the last 30 years since the species was first collected in the Elk River (SEFC 2008 p. 10; Cincotta 2009a, p. 1; Cincotta 2009b, p. 1; Welsh 2009b, p. 1, Ruble and Welsh 2010, p. 2). More than half of these collections (n = 26) have occurred in the last 5 years as a result of focused conservation efforts and sampling that targeted known or suspected diamond darter locations based on habitat mapping (Cincotta 2009b, p. 1; Cincotta 2009c, p. 1; Ruble 2011a, pp. 1–2).

Welsh *et al.* (2004, p. 8) concludes that the number of individuals in the Elk River is likely small given the low catch per unit effort totals recorded in both previous and recent surveys. Independent publications that have evaluated the status of the species further corroborate the rarity of the species. For example, the diamond darter was recently highlighted as a Threatened Fish of the World (Welsh *et al.* 2008, pp. 1–2) and was listed by the Southeastern Fishes Council as one of the 12 most imperiled fishes (i.e., the ''desperate dozen'') of the southeastern United States (SEFC 2008, pp. 2–3).

Summary of Factors Affecting the Species

Section 4 of the Act (16 U.S.C. 1533), and its implementing regulations at 50 CFR part 424, set forth the procedures for adding species to the Federal Lists of Endangered and Threatened Wildlife and Plants. Under section 4(a)(1) of the Act, we may list a species based on any of the following five factors: (A) The present or threatened destruction, modification, or curtailment of its habitat or range; (B) overutilization for commercial, recreational, scientific, or educational purposes; (C) disease or predation; (D) the inadequacy of existing regulatory mechanisms; and (E) other natural or manmade factors affecting its continued existence. Listing actions may be warranted based on any of the above threat factors, singly or in combination. Each of these factors is discussed below.

Factor A. The Present or Threatened Destruction, Modification, or Curtailment of Its Habitat or Range

As indicated by the continued persistence of the diamond darter, the Elk River in West Virginia currently provides overall high-quality aquatic habitat. The Elk River is one of the most ecologically diverse rivers in the State (Green 1999, p. 2) supporting over 100 species of fish and 30 species of mussels, including 5 federally listed mussel species (Welsh 2009a, p. 1). The river, including those portions that are within the range of the diamond darter, is listed as a ''high quality stream'' by the West Virginia Division of Natural Resources (WVDNR 2001, pp. 1, 2, 5). Streams in this category are defined as having ''significant or irreplaceable fish, wildlife, and recreational resources'' (WVDNR 2001, p. iii). In an evaluation of the watershed, the West Virginia Department of Environmental Protection (WVDEP) noted that all four sampling sites within the mainstem of the Elk River scored well for benthic macroinvertebrates on the West Virginia Stream Condition Index, with results of 77 or higher out of a potential 100 points (WVDEP 1997, p. 41).

Criteria for placement on the high-quality streams list are based solely on the quality of fisheries populations and the utilization of those populations by the public and do not include water quality or threats to the watershed (WVDNR 2001, p. 36; Brown 2009, p. 1). Despite the high quality of the fishery populations, there are continuing and pervasive threats within the watershed. In fact, the WVDEP evaluation also noted that because larger rivers offer a wider variety of microhabitats, the high benthic macroinvertebrate scores may mask some degradation in water quality (WVDEP 1997, p. 41). Noted threats to the watershed include coal mining, oil and gas development, sedimentation and erosion, timber harvesting, water quality degradation, and poor wastewater treatment (WVDEP 1997, p. 15; Strager 2008, pp. 1–39; WVDEP 2008b, pp. 1–2).

Many sources have recognized that *Crystallaria* species appear to be particularly susceptible to habitat alterations and changes in water quality. Threats similar to those experienced in the Elk River watershed have likely contributed to the extirpation of *Crystallaria* within other watersheds (Clay 1975, p. 315; Trautman 1981, pp. 24–29, 646; Grandmaison 2003, pp. 16–19). In addition, the current range of the diamond darter is restricted and isolated from other potential and historical habitats by impoundments.

Coal Mining

Coal mining occurs throughout the entire Elk River watershed. Most of the active mining occurs in the half of the watershed south of the Elk River (see Unit 1 Map below), which flows east to west (Strager 2008, p. 17). The most recent summarized data, as of January 2008, indicates more than 5,260 hectares (ha) (13,000 acres [ac]) of actively mined areas including 91 surface mine permits, 79 underground mine permits, 1,351 ha (3,339 ac) of valley fills, 582 km (362 mi) of haul roads, 385 km (239 mi) of mine drainage structures, 473 National Pollutant Discharge Elimination System (NPDES) discharge points associated with mines, and 3 mining related dams (Strager 2008, pp. 19–21). There are also 615 ha (1,519 ac) of abandoned mine lands and 155 mine permit sites that have forfeited their bonds and have not adequately remediated the sites (Strager 2008, p. 18). Approximately 47 percent of the entire Elk River watershed is within the area that the U.S. Environmental Protection Agency has identified as potentially being subject to mountain top removal mining activities (Strager 2008, p. 17).

Coal mining can contribute significant amounts of sediment to streams and degrade their water quality. Impacts to instream water quality (chemistry) occur through inputs of dissolved metals and other solids that elevate stream conductivity, increase sulfate levels, alter stream pH, or a combination of these (Curtis 1973, pp. 153–155; Pond 2004, pp. 6–7, 38–41; Hartman *et al.* 2005, p. 95; Mattingly *et al.* 2005, p. 59; Palmer *et al.* 2010, pp. 148–149). As rock strata and overburden (excess material) are exposed to the atmosphere, precipitation leaches metals and other solids (e.g., calcium, magnesium, sulfates, iron, and manganese) from these materials and carries them in solution to receiving streams (Pond 2004, p. 7). If valley fills are used as part of the mining activity, precipitation and groundwater percolate through the fill and dissolve minerals until they discharge at the toe of the fill as surface water (Pond *et al.* 2008, p. 718). Both of these scenarios result in elevated conductivity, sulfates, and hardness (increased pH) in the receiving stream. Increased levels of these metals and other dissolved solids have been shown to exclude other sensitive fish species and darters from streams, including the federally threatened blackside dace (*Chrosomus cumberlandensis*) in the upper Cumberland River Basin (Mattingly *et al.* 2005, pp. 59–62). The Kentucky arrow darter (*Etheostoma sagitta spilotum*) was found to be excluded from mined watersheds when conductivity exceeded 250 micro Siemens per cm (μS/cm) (Thomas 2008, pp. 3–6; U.S. Fish and Wildlife Service (Service) 2009, pp. 1–4).

Mining-associated water quality impacts have been noted in the Elk River. For example, in the Jacks Run watershed, a tributary to the Elk River, one third of the entire watershed had been subject to mining-related land use changes that cleared previously existing vegetation. In a sampling site downstream of mining, the WVDEP documented embedded substrates with dark silt, most likely from manganese precipitate or coal fines, and benthic scores that indicated severe impairment (WVDEP 1997, p. 60). Another Elk River tributary, Blue Creek, had low pH levels associated with contour mining and acid drainage and three sample sites had pH values of 4.2 or less (WVDEP 1997, p. 47; WVDEP 2008b, p. 6). At pH levels of 5.0 or less, most fish eggs cannot hatch (USEPA 2009, p. 2).

Sampling sites below a large mining reclamation site in the Buffalo Creek

drainage of the Elk River watershed had violations of the West Virginia water quality criteria for acute aluminum and manganese water quality criteria, poor habitat quality, and substrates that were heavily embedded with coal fines and clay (WVDEP 1997, pp. 4, 56–57). Other sites in the watershed, where topographic maps showed extensive surface mining, had pH readings of 4.7, elevated aluminum levels, and benthic communities that were dominated by acid-tolerant species (WVDEP 1997, pp. 4, 56–57).

A U.S. Geological Survey (USGS) study of the Kanawha River Basin, which includes the Elk River, found that streams draining basins that have been mined since 1980 showed increased dissolved sulfate, decreased median bed-sediment particle size, and impaired benthic invertebrate communities when compared to streams not mined since 1980. Stream-bottom sedimentation in mined basins was also greater than in undisturbed basins (USGS 2000, p. 1). In streams that drained areas where large quantities of coal had been mined, the benthic invertebrate community was impaired in comparison to rural parts of the study area where little or no coal had been mined since 1980 (USGS 2000, p. 7). That report notes that benthic invertebrates are good indicators of overall stream water quality and that an impaired invertebrate community indicates that stream chemistry or physical habitat, or both, are impaired, causing a disruption in the aquatic food web (USGS 2000, p. 8).

In another study that specifically evaluated fish data, the Index of Biotic Integrity (IBI) scores at sites downstream of valley fills were significantly reduced by an average of 10 points when compared to unmined sites, indicating that fish communities were degraded below mined areas (Fulk *et al.* 2003, p. iv). In addition, that study noted a significant correlation between the number of fishes that were benthic invertivores and the amount of mining in the study watershed: the number of those types of fish species decreased with increased mining (Fulk *et al.* 2003, pp. 41–44). As described above in the Life History section, the diamond darter is a benthic invertivore. The effects described above are often more pronounced in smaller watersheds that do not have the capacity to buffer or dilute degraded water quality (WVDEP 1997, p. 42; Fulk *et al.* 2003, pp. ii–iv). Because the mainstem Elk River drains a relatively large watershed, these types of adverse effects are more likely to be noticed near the confluences of tributaries that are most severely altered by mining activities such as Blue Creek, which occurs within the known range of the diamond darter, and Buffalo Creek, which is upstream of the known diamond darter locations.

In addition to chronic sediment releases and water quality effects from coal mine areas, the potential exists for failure of large-scale mine waste (coal slurry) impoundment structures contained by dams constructed of earth, mining refuse, and various other materials, which could release massive quantities of mine wastes that could cover the stream bottoms. There are currently two coal slurry impoundments within the Elk River watershed. These impoundments have a capacity of 6,258,023 and 1,415,842 cubic meters (m^3) (221,000,000 and 50,000,000 cubic feet [cf]). The larger structure covers 19 ha (48 ac) and is considered a ''class C'' dam which could result in the loss of human life and serious damage to homes, and industrial and commercial facilities in the event of failure (Strager 2008, pp. 21–22). A third coal refuse disposal impoundment is permitted and planned for construction with an additional 54,821 m^3 (1,936,000 cf) of capacity (Fala 2009, p. 1; WVDEP 2012, p. 1). These three impoundments are on tributaries of the Elk River upstream of the reach of river known to support the diamond darter. In October 2000, a coal slurry impoundment near Inez, Kentucky breached, releasing almost 991,090 m^3 (35,000,000 cf) of slurry into the Big Sandy Creek Watershed. ''The slurry left fish, turtles, snakes and other aquatic species smothered as the slurry covered the bottoms of the streams and rivers and extended out into the adjacent floodplain'' (USEPA 2001a, p. 2). Over 161 km (100 mi) of stream were impacted by the spill (USEPA 2001a, p. 2). If a similar dam failure were to occur in the Elk River watershed, it could have detrimental consequences for the diamond darter population.

There is also a potential for abandoned underground mines to fill with water and ''blow out'' causing large discharges of sediment and contaminated water. Similar events have happened in nearby areas, including one in Kanawha County, West Virginia, in April 2009 that discharged ''hundreds of thousands of gallons of water'' onto a nearby highway, and caused a ''massive earth and rock slide'' (Marks 2009, p. 1). A second situation occurred in March 2009 in Kentucky where water from the mine portal was discharged into a nearby creek at an estimated rate of 37,854 liters (l) (10,000 gallons [ga]) a minute (Associated Press 2009, p. 1). In addition to the increased levels of sediment and potential smothering of stream habitats, discharges from abandoned mine sites often have elevated levels of metals and low pH (Stoertz *et al.* 2001, p. 1). In 2010, a fish kill occurred in Blue Creek, a tributary of the Elk River in Kanawha County, when a contractor working for WVDEP attempted to cleanup an abandoned mine site. When they breached an impoundment, the mine discharged highly acidic water that then flowed into the stream. Approximately 14.5 km (9 mi) of Blue Creek was affected by the fish kill (McCoy 2010, p. 1). The effects of the fish kill were stopped by response crews 9.5 km (5.9 mi) upstream from where Blue Creek enters the Elk River within the known range of the diamond darter.

Oil and Gas Development

The Elk River watershed is also one of the more densely drilled areas of the State, with over 5,800 oil or gas wells in the watershed as of the most recent data in January 2011 (WVDEP 2011a, p. 1). The lower section of the Elk River, which currently contains the diamond darter, has the highest concentration of both active and total wells in the watershed, with over 2,320 active wells and 285 abandoned wells (WVDEP 2011a, p. 1).

Although limited data are available to quantify potential impacts, development of oil and gas resources can increase sedimentation rates in the stream and degrade habitat and water quality in a manner similar to that described for coal mining. Oil and gas wells can specifically cause elevated chloride levels through discharge of brine and runoff from materials used at the site, and the erosion of roads associated with these wells can contribute large amounts of sediment to the streams (WVDEP 1997, p. 54). For example, WVDEP sampling sites within Summers Fork, a tributary to the Elk River with a ''high density of oil and gas wells,'' had elevated chloride and conductivity levels as well as impaired benthic invertebrate scores despite ''good benthic substrate'' (WVDEP 1997, p. 52). Within the Buffalo Creek watershed, another Elk River tributary, the impaired benthic invertebrate scores at sample sites were attributed to oil compressor stations next to the creek, pipes running along the bank parallel to the stream, and associated evidence of past stream channelization (WVDEP 1997, p. 55).

High levels of siltation have been noted in the impaired sections of the Elk River (USEPA 2001b, pp. 3–6). Oil and gas access roads have been identified as a source that contributes ''high'' levels of sediment to the Elk River (USEPA

2001b, pp. 3–7). The WVDEP estimates the size of the average access road associated with an oil or gas well to be 396 meters (m) (1,300 feet [ft]) long by 7.6 m (25 ft) wide or approximately .30 ha (0.75 ac) per well site (WVDEP 2008b, p. 10). If each of the wells in the watershed has this level of disturbance, there would be over 1,821 ha (4,500 ac) of access roads contributing to increased sedimentation and erosion in the basin. Lack of road maintenance, improper construction, and subsequent use by the timber industry and all-terrain vehicles can increase the amount of erosion associated with these roads (WVDEP 2008b, pp. 5–6).

Shale gas development is an emerging issue in the area. Although this is currently not the most productive area of the State, the entire current range of the diamond darter is underlain by the Marcellus and Utica Shale formation and potentially could be affected by well drilling and development (National Energy Technology Laboratory (NETL) 2010 pp. 6–10). The pace of drilling for Marcellus Shale gas wells is expected to increase substantially in the future, growing to about 700 additional wells per year in West Virginia starting in 2012 (NETL 2010, p. 27). This is consistent with what has been reported in the area around the Elk River. In March 2011, there were 15 Marcellus Shale gas wells reported within Kanawha County (West Virginia Geological and Economic Survey (WVGES) 2011, p. 1). As of January 2012, there were 188 completed Marcellus Shale gas wells within Kanawha County and an additional 27 wells that had been permitted (WVGES 2012, p. 1). Data specific to the Elk River watershed are not available for previous years, but there are currently at least 100 completed and 21 additional permitted Marcellus Shale gas wells within the watershed (WVGES 2012, p 1).

Marcellus Shale gas wells require the use of different techniques than previously used for most gas well development in the area. When compared to more traditional methods, Marcellus Shale wells usually require more land disturbance, and more water and chemicals for operations. In addition to the size and length of any required access roads, between 0.8 and 2.0 ha (2 and 5 ac) are generally disturbed per well (Hazen and Sawyer 2009, p. 7). Each well also requires about 500 to 800 truck trips to the site (Hazen and Sawyer 2009, p. 7). Construction of these wells in close proximity to the Elk River and its tributaries could increase the amount of siltation in the area due to erosion from the disturbed area, road usage, and construction.

Shale gas wells typically employ a technique called hydrofracking which involves pumping a specially blended liquid mix of water and chemicals down a well, into a geologic formation. The pumping occurs under high pressure, causing the formation to crack open and form passages through which gas can flow into the well. During the drilling process, each well may utilize between 7 and 15 million liters (2 and 4 million ga) of water (Higginbotham *et al.* 2010, p. 40). This water is typically withdrawn from streams and waterbodies in close proximity to the location where the well is drilled. Excessive water withdrawals can reduce the quality and quantity of habitat available to fish within the streams, increase water temperatures, reduce dissolved oxygen concentrations, and increase the concentration of any pollutants in the remaining waters (Freeman and Marcinek 2006, p. 445; PSU 2010, p. 9). Increasing water withdrawals has been shown to be associated with a loss of native fish species that are dependent on flowing-water habitats. Darters were one group of species that were noted to be particularly vulnerable to this threat (Freeman and Marcinek 2006, p. 444).

In addition to water withdrawals, there is a potential for spills and discharges from oil and gas wells, particularly Marcellus Shale drilling operations. Pipelines and ponds being used to handle brine and wastewaters from fracking operations can rupture, fail, or overflow and discharge into nearby streams and waterways. In Pennsylvania, accidental discharges of brine water from a well site have killed fish, invertebrates, and amphibians up to 0.4 mi (0.64 km) downstream of the discharge, even though the company immediately took measures to control and respond to the spill (PADEP 2009, pp. 4–22). In 2011, the WVDEP cited a company for a spill at a well site in Elkview, West Virginia. Up to 50 barrels of oil leaked from a faulty line on the oil well site. The spill entered a tributary of Indian Creek, traveled into Indian Creek and then flowed into the Elk River (Charleston Gazette 2011, p. 1). This spill occurred within the reach of the Elk River known to be occupied by the diamond darter, and therefore could have affected the species and its habitat.

Siltation (Sedimentation)

Excess siltation has been specifically noted as a threat to the Elk River system. Portions of the lower Elk River were previously listed as impaired due to elevated levels of iron and aluminum (USEPA 2001b, p. 1–1; Strager 2008, p. 36; WVDEP 2008a, p. 18; WVDEP 2008b, p. 1). The WVDEP has since revised those water quality criteria in order to address bioavailability of those metals, and established maximum amounts of these pollutants allowed to enter the waterbody (known as Total Maximum Daily Loads [TMDL]) (WVDEP 2010, p. 26; WVDEP 2008a, p. A–2). The WVDEP identified that impairment due to metals usually indicates excess sediment conditions (WVDEP 2008b, p. 5), and identified coal mining, oil and gas development, timber harvesting, all-terrain vehicle usage, and stream bank erosion as sources of increased sedimentation within the Elk River watershed (USEPA 2001b, pp. 1–1, 3–4 and 6; WVDEP 2008b, p. 1). Within two subwatersheds that make up approximately 11 percent of the total Elk River watershed area, the WVDEP identified 433 km (269 miles) of unimproved dirt roads and 76 km (47 mi) of severely eroding stream banks (WVDEP 2008b, p. 5). There was also an estimated 1,328 ha (3,283 ac) of lands being actively timbered in those two watersheds in 2004 (WVDEP 2008b, p. 6). Although data on timber harvesting for the entire Elk River watershed are not available, it is likely that these types of activities are common because there are 11 known sawmills within the watershed, and forested land is the predominant land-use category in the area (Strager 2008, pp. 13, 29).

Siltation has long been recognized as a pollutant that alters aquatic habitats by reducing light penetration, changing heat radiation, increasing turbidity, and covering the stream bottom (Ellis 1936 in Grandmaison *et al.* 2003, p. 17). Increased siltation has also been shown to abrade and suffocate bottom-dwelling organisms, reduce aquatic insect diversity and abundance, and, ultimately, negatively impact fish growth, survival, and reproduction (Berkman and Rabeni 1987, p. 285). Siltation directly affects the availability of food for the diamond darter by reducing the diversity and abundance of aquatic invertebrates on which the diamond darter feeds (Powell 1999, pp. 34–35), and by increasing turbidity, which reduces foraging efficiency (Berkman and Rabeni 1987, pp. 285–294). Research has found that when the percentage of fine substrates increases in a stream, the abundance of benthic insectivorous fishes decreases (Berkamn and Rabeni 1987, p. 285). Siltation also affects the ability of diamond darters to successfully breed by filling the small interstitial spaces between sand and

gravel substrates with silt. Diamond darters lay their eggs within these interstitial spaces. The complexity and abundance of interstitial spaces is reduced dramatically with increasing sediment inputs and the resulting increase in substrate embeddedness. Consequently, the amount of suitable breeding microhabitat for species such as the diamond darter is reduced (Bhowmik and Adams 1989, Kessler and Thorp 1993, Waters 1995, and Osier and Welsh 2007 all in Service 2008, pp. 15–16).

Many researchers have noted that *Crystallaria* species are particularly susceptible to the effects of siltation, and Grandmaison *et al.* (2003, pp. 17–18) summarize the information as follows: ''Bhowmik and Adams (1989) provide an example of how sediment deposition has altered aquatic habitat in the Upper Mississippi River system, where the construction of locks and dams has resulted in siltation leading to a successional shift from open water to habitats dominated by submergent and emergent vegetation. This successional process is not likely to favor species such as the crystal darter which rely on extensive clean sand and gravel raceways for population persistence (Page 1983). For example, the crystal darter was broadly distributed in tributaries of the Ohio River until high silt loading and the subsequent smothering of sandy substrates occurred (Trautman 1981). In the Upper Mississippi River, the relative rarity of crystal darters has been hypothesized as a response to silt deposition over sand and gravel substrates (Hatch 1998)''. Although the Trautman (1981) citation within the above quote mentions the crystal darter, we now know that he was referring to individuals that have since been identified as diamond darters. In summary, *Crystallaria* species, including both the diamond darter and the crystal darter, are known to be particularly susceptible to the effects of sedimentation, and populations of these species have likely become extirpated or severely reduced in size as a result of this threat.

Water Quality/Sewage Treatment

One common source of chemical water quality impairments is untreated or poorly treated wastewater (sewage). Municipal wastewater treatment has improved dramatically since passage of the 1972 amendments to the Federal Water Pollution Control Act (which was amended to become the Clean Water Act in 1977), but some wastewater treatment plants, especially smaller plants, continue to experience maintenance and operation problems that lead to discharge of poorly treated sewage into streams and rivers (OEPA 2004 in Service 2008, p. 23). According to the data available in 2008, there were a total of 30 sewage treatment plants within the Elk River watershed (Strager 2008, p. 30).

Untreated domestic sewage (straight piping) and poorly operating septic systems are still problems within the Elk River watershed (WVDEP 1997, p. 54; WVDEP 2008b, p. 3). Untreated or poorly treated sewage contributes a variety of chemical contaminants to a stream including ammonia, pathogenic bacteria, nutrients (e.g., phosphorous and nitrogen), and organic matter that can increase biochemical oxygen demand (BOD) (Chu-Fa Tsai 1973, pp. 282–292; Cooper 1993, p. 405). The BOD is a measure of the oxygen consumed through aerobic respiration of micro-organisms that break down organic matter in the sewage waste. Excessive BOD and nutrients in streams can lead to low dissolved oxygen (DO) levels in interstitial areas of the substrate where a high level of decomposition and, consequently, oxygen depletion takes place (Whitman and Clark 1982, p. 653). Low interstitial DO has the potential to be particularly detrimental to fish such as the diamond darter which live on and under the bottom substrates of streams and lay eggs in interstitial areas (Whitman and Clark 1982, p. 653). Adequate oxygen is an important aspect of egg development, and reduced oxygen levels can lead to increased egg mortality, reduced hatching success, and delayed hatching (Keckeis *et al.* 1996, p. 436).

Elevated nutrients in substrates can also make these habitats unsuitable for fish spawning, breeding, or foraging and reduce aquatic insect diversity which may impact availability of prey and ultimately fish growth (Chu-Fa Tsai 1973, pp. 282–292; Wynes and Wissing 1981, pp. 259–267). Darters are noted to be ''highly sensitive'' to nutrient increases associated with sewage discharges, and studies have demonstrated that the abundance and distribution of darter species decreases downstream of these effluents (Katz and Gaufin 1953, p. 156; Wynes and Wissing 1981, p. 259). Elevated levels of fecal coliform signal the presence of improperly treated wastes (WVDEP 2008a, p. 7) that can cause the types of spawning, breeding, and foraging problems discussed above.

The reach of the Elk River from the mouth to River Mile 102.5, which includes the area supporting the diamond darter, is currently on the State's CWA section 303(d) list of impaired waters due to violations of fecal coliform levels (WVDEP 2008a, p. 18; WVDEP 2010, p. 26). There have been noticeable increases in fecal coliform near population centers adjacent to the Elk River, including the cities of Charleston, Elkview, Frametown, Gassaway, Sutton, and Clay (WVDEP 2008b, p. 8). Elk River tributaries near Clendenin also show evidence of organic enrichment and elevated levels of fecal coliform (WVDEP 1997, p. 48). The WVDEP notes that failing or nonexistent septic systems are prevalent throughout the lower Elk River watershed (WVDEP 2008b, p. 1). In order to address water quality problems, the WVDEP conducted a more detailed analysis of two major tributary watersheds to the lower Elk River. They found that all residences in these watersheds were ''unsewered'' (WVDEP 2008b, p. 7). The Kanawha County Health Department Sanitarians estimate that the probable failure rate for these types of systems is between 25 and 30 percent, and monitoring suggests it may be as high as 70 percent (WVDEP 2008b, p. 7).

In another study, it was noted that straight pipe and grey water discharges are often found in residences within the Elk River watershed because the extra grey water would overburden septic systems. These untreated wastes are discharged directly into streams. This grey water can contain many household cleaning and disinfectant products that can harm stream biota (WVDEP 1997, p. 54). Finally, there is the potential for inadvertent spills and discharges of sewage waste. In 2010, a section of stream bank along the Elk River near Clendenin failed and fell into the river, damaging a sewerline when it fell. The line then discharged raw sewage into the river (Marks 2010, p. 1). The diamond darter is known to occur in the Elk River near Clendenin; therefore, this discharge could have likely affected the species.

Impoundment

One of the reasons the diamond darter may have been able to persist in the Elk River is because the river remains largely unimpounded. Although there is one dam on the Elk River near Sutton, approximately 161 km (100 mi) of the river downstream of the dam retains natural, free-flowing riffle and pool characteristics, including the portion that supports the diamond darter (Strager 2008, p. 5; Service 2008). All the other rivers with documented historical diamond darter occurrences are now either partially or completely impounded. There are 4 dams on the Green River, 8 dams on the Cumberland River, and 11 locks and dams on the

Muskingum River. A series of 20 locks and dams have impounded the entire Ohio River for navigation. Construction of most of these structures was completed between 1880 and 1950; however, the most recent dam constructed on the Cumberland River was completed in 1973 (Clay 1975, p. 3; Trautman 1981, p. 25; Tennessee Historical Society 2002, p. 4; American Canal Society 2009, p. 1; Ohio Division of Natural Resources 2009, p. 1).

These impoundments have permanently altered habitat suitability in the affected reaches and fragmented stream habitats, blocking fish immigration and emigration between the river systems, and preventing recolonization (Grandmaison *et al.* 2003, p. 18). Trautman (1981, p. 25) notes that the impoundment of the Muskingum and Ohio Rivers for navigation purposes almost entirely eliminated riffle habitat in these rivers, increased the amount of silt settling on the bottom which covered former sand and gravel substrates, and affected the ability of the diamond darter to survive in these systems. In addition, almost the entire length of the Kanawha River, including the 53 km (33 mi) upstream of the confluence with the Elk River and an additional 93 km (58 mi) downstream to Kanawha's confluence with the Ohio River, has been impounded for navigation (U.S. Army Corps of Engineers (ACOE) 1994, pp. 1, 13, 19). The series of dams and impoundments on this system likely impede movement between the only remaining population of the diamond darter in the Elk River and the larger Ohio River watershed, including the other known river systems with historical populations. Range fragmentation and isolation (see Factor E below) is noted to be a significant threat to the persistence of the diamond darter (Warren *et al.* 2000 in Grandmaison *et al.* 2003, p. 18).

Direct Habitat Disturbance

There is the potential for direct disturbance, alteration, and fill of diamond darter habitat in the Elk River. Since 2009, there have been at least three proposed projects that had the potential to directly disturb habitat in the Elk River in reaches that are known to support the species. Plans for these projects have not yet been finalized. Project types have included bridges and waterline crossings. Direct disturbances to the habitat containing the diamond darter could kill or injure adult individuals, young, or eggs. Waterline construction that involves direct trenching through the diamond darter's habitat could destabilize the substrates, leading to increased sedimentation or erosion. Placement of fill in the river could result in the overall reduction of habitat that could support the species, and could alter flows and substrate conditions, making the area less suitable for the species (Welsh 2009d, p. 1).

In addition, the expansion of gas development in the basin will likely lead to additional requests for new or upgraded gas transmission lines across the river. Pipeline stream crossings can affect fish habitat; food availability; and fish behavior, health, reproduction, and survival. The most immediate effect of instream construction is the creation of short-term pulses of highly turbid water and total suspended solids (TSS) downstream of construction (Levesque and Dube 2007, pp. 399–400). Although these pulses are usually of relatively short duration and there is typically a rapid return to background conditions after activities cease, instream construction has been shown to have considerable effects on stream substrates and benthic invertebrate communities that persist after construction has been completed (Levesque and Dube 2007, p. 396–397). Commonly documented effects include substrate compaction, as well as silt deposition within the direct impact area and downstream that fills interstitial spaces and reduces water flow through the substrate, increasing substrate embeddedness and reducing habitat quality (Reid and Anderson 1999, p. 243; Levesque and Dube 2007, pp. 396–397; Penkal and Phillips 2011, pp. 6–7). Construction also directly alters stream channels, beds, and banks resulting in changes in cover, channel morphology, and sediment transport dynamics. Stream bank alterations can lead to increased water velocities, stream degradation, and stream channel migrations. Removal of vegetation from the banks can change temperature regimes, and increase sediment and nutrient loads (Penkal and Phillips 2011, pp. 6–7).

These instream changes not only directly affect the suitability of fish habitat, they also affect the availability and quality of fish forage by altering the composition and reducing the density of benthic invertebrate communities within and downstream of the construction area (Reid and Anderson 1999, pp. 235, 244; Levesque and Dube 2007, pp. 396–399; Penkal and Phillips 2011, pp. 6–7). Various studies have documented adverse effects to the benthic community that have been apparent for between 6 months and 4 years post-construction (Reid and Anderson 1999, pp. 235, 244; Levesque and Dube 2007, pp. 399–400). Stream crossings have also been shown to affect fish physiology, survival, growth, and reproductive success (Levesque and Dube 2007, p. 399). Studies have found decreased abundance of fish downstream of crossings, as well as signs of physiological stress such as increased oxygen consumption and loss of equilibrium in remaining fish downstream of crossings (Reid and Anderson 1999, pp. 244–245; Levesque and Dube 2007, pp. 399–401). Increased sediment deposition and substrate compaction from pipeline crossing construction can degrade spawning habitat, result in the production of fewer and smaller fish eggs, impair egg and larvae development, limit food availability for young-of-the-year fish, and increase stress and reduce disease resistance of fish (Reid and Anderson 1999, pp. 244–245; Levesque and Dube 2007, pp. 401–402).

The duration and severity of these effects depends on factors such as the duration of disturbance, the length of stream segment directly impacted by construction, and whether there are repeated disturbances (Yount and Niemi 1990, p. 557). Most studies documented recovery of the affected stream reach within 1 to 3 years after construction (Yount and Niemi 1990, pp. 557–558, 562; Reid and Anderson 1999, p. 247). However, caution should be used when interpreting results of short-term studies. Yount and Niemi (1990, p. 558) cite an example of one study that made a preliminary determination of stream recovery within 1 year, but when the site was reexamined 6 years later, fish biomass, fish populations, macroinvertebrate densities, and species composition were still changing. It was suspected that shifts in sediment and nutrient inputs to the site as a result of construction in and around the stream contributed to the long-term lack of recovery. In another study, alterations in channel morphology, such as increased channel width and reduced water depth, were evident 2 to 4 years post-construction at sites that lacked an intact forest canopy (Reid and Anderson 1999, p. 243).

There is also the potential for cumulative effects. While a single crossing may have only short-term or minor effects, multiple crossings or multiple sources of disturbance and sedimentation in a watershed can have cumulative effects on fish survival and reproduction that exceed the recovery capacity of the river, resulting in permanent detrimental effects (Levesque and Dube 2007, pp. 406–407). Whether or how quickly a stream population recovers depends on factors such as the life-history characteristics of the species, and the availability of

unaffected populations upstream and downstream as a source of organisms for recolonization (Yount and Niemi 1990, p. 547). Species such as the diamond darter that are particularly susceptible to the effects of sedimentation and substrate embeddedness, and that have limited distribution and population numbers, are likely to be more severely affected by instream disturbances than other more common and resilient species.

Summary of Factor A

In summary, there are significant threats to the diamond darter from the present and threatened destruction, modification, or curtailment of its habitat. Threats include discharges from activities such as coal mining and oil and gas development, sedimentation from a variety of sources, pollutants originating from inadequate wastewater treatment, habitat changes caused by impoundments, and direct habitat disturbance. These threats are ongoing, severe, and occur throughout the species' entire range. We have no information indicating that these threats are likely to be appreciably reduced in the future, and in the case of gas development, we expect this threat to increase over the next several years as shale gas development continues to intensify.

Factor B. Overutilization for Commercial, Recreational, Scientific, or Educational Purposes

Due to the small size and limited distribution of the only remaining population, the diamond darter is potentially vulnerable to overutilization. Particular care must be used to ensure that collection for scientific purposes does not become a long-term or substantial threat. It is possible that previous scientific studies may have impacted the population. Of the fewer than 50 individuals captured to date, 14 either died as a result of the capture or were sacrificed for use in scientific studies. Nineteen were removed from the system and were used for the establishment of a captive breeding program. Two have died in captivity. It should be noted that there were valid scientific purposes for most of these collections. In order to verify the identification and permanently document the first record of the species in West Virginia, the specimen captured in 1980 was preserved as a voucher specimen consistent with general scientific protocols of the time. Subsequent surveys in the 1990s were conducted for the specific purpose of collecting additional specimens to be used in the genetic and morphological analyses required to determine the taxonomic and conservation status of the species. The extent and scope of these studies were determined and reviewed by a variety of entities including the WVDNR, the Service, USGS, university scientists, and professional ichthyologists (Tolin 1995, p. 1; Wood and Raley 2000, pp. 20–26; Lemarie 2004, pp. 1–57; Welsh and Wood 2008, pp. 62–68).

In addition, when these collections were initiated, insufficient data were available to establish the overall imperiled and unique status of the species. Because these studies are now complete, there should be limited need to sacrifice additional individuals for scientific analysis. The captive breeding program was established after a review of the conservation status of the species identified that there were imminent threats to the last remaining population, and species experts identified the need to establish a captive ''ark'' population in order to avert extinction in the event of a spill or continued chronic threats to the species. The establishment of this program should contribute to the overall conservation of the species and may lead to the eventual augmentation of populations. However, caution must still be used to ensure that any additional collections do not affect the status of wild populations.

It is possible that future surveys conducted within the range of the species could inadvertently result in mortality of additional individuals. For example, during some types of inventory work, fish captured are preserved in the field and brought back to the lab for identification. Young-of-the-year diamond darters are not easily distinguished from other species, and their presence within these samples may not be realized until after the samples are processed. This was the case during studies recently conducted by a local university (Cincotta 2009a, p. 1). Future surveys should be designed with protocols in place to minimize the risk that diamond darters will be inadvertently taken during nontarget studies. The WVDNR currently issues collecting permits for all surveys and scientific collections conducted within the State and incorporates appropriate conditions into any permits issued for studies that will occur within the potential range of the species. This limits the overall potential for overutilization for scientific purposes.

Although the species has no present commercial value, it is possible that live specimens may be collected for the aquarium trade (Walsh *et al.* 2003 in Grandmaison *et al.* 2003 p. 19), and that once its rarity becomes more widely known, it may become attractive to collectors. However, there is no information available to suggest that this is currently a threat. There are no known recreational or educational uses for the species.

As a result, we find that overutilization for commercial, recreational, scientific, or educational purposes is not an imminent threat to the diamond darter at this time. For a species with a limited range and population size, there is the potential that overutilization for scientific purposes could have an effect on the viability of the species. However, there is limited need for additional research that would require the sacrifice of individuals. Based on our review of the best available scientific and commercial information, overutilization is not currently or likely to become a significant threat to the species in the future.

Factor C. Disease or Predation

There is no specific information available to suggest that disease or predation present an unusual threat to diamond darters. Although some natural predation by fish and wildlife may occur, darters usually constitute only an almost incidental component in the diet of predators (Page 1983, p. 172). This incidental predation is not considered to currently pose a significant threat to the species.

Commonly reported parasites and diseases of darters, in general, include black-spot disease, flukes, nematodes, leeches, spiny-headed worms, and copepods (Page 1983, p. 173). None of the best available information regarding diamond darters captured to date, or reports on the related crystal darter, note any incidences of these types of issues. As a result, we find that disease or predation does not currently pose a threat to the species, and we found no available information that indicates disease or predation is currently or likely to become a threat to the diamond darter in the future.

Factor D. The Inadequacy of Existing Regulatory Mechanisms

There are few existing Federal or State regulatory mechanisms that specifically protect the diamond darter or its aquatic habitat where it currently occurs. The diamond darter and its habitats are afforded some protection from water quality and habitat degradation under the Clean Water Act of 1977 (33 U.S.C. 1251 *et seq.*), Surface Mining Control and Reclamation Act of 1977 (30 U.S.C. 1234–1328), West Virginia Logging and Sediment Control Act (WVSC § 19–1B), and additional West Virginia laws and

regulations regarding natural resources and environmental protection (WVSC § 20–2–50; § 22–6A; § 22–26–3). However, as demonstrated under Factor A, degradation of habitat for this species is ongoing despite the protection afforded by these laws and corresponding regulations. While these laws have resulted in some improvements in water quality and stream habitat for aquatic life, including the diamond darter, they alone have not been adequate to fully protect this species. Water quality degradation, sedimentation, nonpoint-source pollutants, and habitat alteration continue to threaten the species.

Although water quality has generally improved since 1977 when the Clean Water Act (33 U.S.C. 1251 *et seq.*) and Surface Mining Control and Reclamation Act (30 U.S.C. 1234–1328) were enacted or amended in 1977, there is continuing, ongoing degradation of water quality within the range of the diamond darter. A total of 214 streams within the Elk River watershed have been identified as impaired by the WVDEP and placed on the State's 303(d) list (WVDEP 2011b, p. viii). Causes of impairment that were identified include existing mining operations, abandoned mine lands, fecal coliform from sewage discharges, roads, oil and gas operations, timbering, land use disturbance (urban, residential, or agriculture), and stream bank erosion (WVDEP 2011b, pp. viii–ix). For water bodies on the 303(d) list, States are required under the Clean Water Act to establish a TMDL for the pollutants of concern that will improve water quality to meet the applicable standards. The WVDEP has established TMDLs for total iron, dissolved aluminum, total selenium, pH, and fecal coliform bacteria. The total iron TMDL is used as a surrogate to address impacts associated with excess sediments (WVDEP 2011b, p. 47). Because these TMDLs have just recently been established, it is not known how effective they will be at reducing the levels of these pollutants, or how long streams within the Elk River watershed will remain impaired. In addition, TMDLs apply primarily to point-source discharge permits, and since nonpoint sources may also contribute to sediment loading in the watershed, TMDLs are not, at this time, an adequate mechanism to address sedimentation. The Service is also not aware of any other current or future changes to State or Federal water quality or mining laws that will substantially affect the currently observed degradation of water quality.

Nonpoint-source pollution, originating from many sources at different locations, is considered to be a continuing threat to diamond darter habitats. Current laws do not adequately protect diamond darter and its habitats from nonpoint-source pollution, because there is limited compliance with existing laws to prevent sediment entering waterways. For example, forestry operations do not have permitting requirements under the Clean Water Act because there is a silvicultural exemption as long as best management practices (BMPs) are used to help control nonpoint-source pollution (Ryder and Edwards 2006, p. 272). The West Virginia Logging Sediment Control Act was developed to protect aquatic resources, such as the diamond darter's habitat, in response to the requirements of the Clean Water Act and mandates the use of BMPS in order to reduce the amount of sediment from logging operations that enters nearby waterways (West Virginia Division of Forestry (WVDOF) undated, p. 1). Without properly installed BMPs, logging operations can increase sediment loading into streams (WVDEP 2011b, p. 35).

A survey of randomly selected logging operations throughout West Virginia estimated that overall compliance with these BMPs averaged 74 percent, and compliance with specific categories of BMPs varied from 81 percent compliance with BMPs related to construction of haul roads, to only 55 percent compliance with BMPs related to the establishment and protection of streamside management zones (Wang *et al.* 2007, p. 60). Another study evaluating the effects of forestry haul roads documented that watershed turbidities increased significantly following road construction and that silt fences installed to control erosion became ineffectual near stream crossings and allowed substantial amounts of sediment to reach the channel (Wang *et al.* 2010, p. 1). Because the BMPs are not always strictly applied and logging activities can still be a significant nonpoint-source of water quality impairment, the West Virginia Logging Sediment Control Act is currently considered an inadequate regulatory mechanism for the protection of aquatic habitats that support the diamond darter.

West Virginia State laws regarding oil and gas drilling, including recently enacted changes to West Virginia State Code § 22–6A, are generally designed to protect fresh water resources like the diamond darter's habitat, but the laws do not contain specific provisions requiring an analysis of project impacts to fish and wildlife resources. They also do not contain or provide any formal mechanism requiring coordination with, or input from, the Service or the WVDNR regarding the presence of federally threatened, endangered, or candidate species, or other rare and sensitive species. Thus, although the State Code is designed to protect fresh water resources and the environment, compliance with this existing oil and gas development regulatory mechanism is insufficient to protect the diamond darter or its habitat.

West Virginia State Code § 20–2–50 prohibits taking fish species for scientific purposes without a permit. The WVDNR currently issues collecting permits for surveys conducted within the State and incorporates appropriate conditions into any permits issued for studies that will occur within the potential range of the species. While this should limit the number of individuals impacted by survey and research efforts, this requirement does not provide any protection to the species' habitat.

The diamond darter is indirectly provided some protection from Federal actions and activities through the Federal Endangered Species Act because the Elk River also supports five federally endangered mussel species. The reach of the Elk River currently known to support the diamond darter also supports the pink mucket (*Lampsilis abrupta*), the northern riffleshell (*Epioblasma torulosa rangiana*), the rayed bean (*Villosa fabalis*), and the snuffbox (*Epioblasma triquetra).* The clubshell mussel (*Pleurobema clava*) occurs in the reach of the Elk River upstream of the diamond darter. However, protective measures for listed freshwater mussels have generally involved surveys for mussel species presence and minimization of direct habitat disturbance in areas with confirmed presence. The diamond darter is more mobile and therefore is likely to be present within a less restricted area than most mussel species. Surveys for mussels will not detect diamond darters. As a result, these measures provide some limited protection for the diamond darter, but only in specific locations where it co-occurs with these mussel species.

In summary, degradation of habitat for the diamond darter is ongoing despite existing regulatory mechanisms. These regulatory measures have been insufficient to significantly reduce or remove the threats to the diamond darter.

Factor E. Other Natural or Manmade Factors Affecting Its Continued Existence

Didymosphenia geminate

The presence of *Didymosphenia geminate,* an alga known as ''didymo'' or ''rock snot'' has the potential to adversely affect diamond darter populations in the Elk River. This alga, historically reported to occur in cold, northern portions of North America (e.g., British Columbia), has been steadily expanding its range within the last 10 to 20 years, and has now been reported to occur in watersheds as far east and south as Arkansas and North Carolina (Spaulding and Elwell 2007, pp. 8–21). The species has also begun occurring in large nuisance blooms that can dominate stream surfaces by covering 100 percent of the substrate with mats up to 20 cm (8 in) thick, extending over 1 km (0.6 mi) and persisting for several months (Spaulding and Elwell 2007, pp. 3, 6). Didymo can greatly alter the physical and biological conditions of streams in which it occurs and cause changes to algal, invertebrate, and fish species diversity and population sizes; stream foodweb structure; and stream hydraulics (Spaulding and Elwell 2007, pp. 3, 12). Didymo is predicted to have particularly detrimental effects on fish, such as the diamond darter, that inhabit stream bottom habitats or consume bottom-dwelling prey (Spaulding and Elwell 2007, p. 15).

While didymo was previously thought to be restricted to cold water streams, it is now known to occur in a wider range of temperatures, and it has been documented in waters that were up as high as 27 °C (80 °F) (Spaulding and Elwell 2007, pp. 8, 10, 16). It can also occur in a wide range of hydraulic conditions including slow-moving, shallow areas, and areas with high depths and velocities (Spaulding and Elwell 2007, pp. 16–17). Didymo can be spread large distances either through the water column or when items such as fishing equipment, boots, neoprene waders, and boats are moved between affected and unaffected sites (Spaulding and Elwell 2007, pp. 19–20). For example, in New Zealand, didymo spread to two sites over 100 km (62.1 mi) and 450 km (279.6 mi) away from the location of the first documented bloom within 1 year (Kilroy and Unwin 2011, p. 254).

Although it has not been documented to occur in the lower Elk River where the diamond darter occurs, in 2008 the WVDNR documented the presence of didymo in the upper Elk River, above Sutton Dam near Webster Springs, which is over 120 km (74.5 mi) upstream from known diamond darter locations (WVDNR 2008, p. 1). Anglers have also reported seeing heavy algal mats, assumed to be didymo, in the upstream reach of the river (WVDNR 2008, p. 1). Therefore, there is potential that the species could spread downstream to within the current range of the diamond darter in the future. If it does spread into the diamond darter habitat, it could degrade habitat quality and pose a significant threat to the species.

Geographic Isolation, Loss of Genetic Variation, and Climate Change

The one existing diamond darter population is small in size and range, and it is geographically isolated from other areas that previously supported the species. The diamond darter's distribution is restricted to a short stream reach, and its small population size makes it extremely susceptible to extirpation from a single catastrophic event (such as a toxic chemical spill or storm event that destroys its habitat). Therefore, reducing the potential ability to recover from the cumulative effects of smaller chronic impacts to the population and habitat such as progressive degradation from runoff (nonpoint source pollutants), and direct disturbances.

Species that are restricted in range and population size are more likely to suffer loss of genetic diversity due to genetic drift, potentially increasing their susceptibility to inbreeding depression, and reducing the fitness of individuals (Soule 1980, pp. 157–158; Hunter 2002, pp. 97–101; Allendorf and Luikart 2007, pp. 117–146). Similarly, the random loss of adaptive genes through genetic drift may limit the ability of diamond darters to respond to changes in their environment such as climate change, or the catastrophic events and chronic impacts described above (Noss and Cooperrider 1994, p. 61). Small population sizes and inhibited gene flow between populations may increase the likelihood of local extirpation (Gilpin and Soulé 1986, pp. 32–34). The long-term viability of a species is founded on the conservation of numerous local populations throughout its geographic range (Harris 1984, pp. 93–104). These separate populations are essential for the species to recover and adapt to environmental change (Harris 1984, pp. 93–104; Noss and Cooperrider 1994, pp. 264–297). The current population of the diamond darter is restricted to one section of one stream. This population is isolated from other suitable and historical habitats by dams that are barriers to fish movement. The level of isolation and restricted range seen in this species makes natural repopulation of historical habitats or other new areas following previous localized extirpations virtually impossible without human intervention.

Climate change has the potential to increase the vulnerability of the diamond darter to random catastrophic events and to compound the effects of restricted genetic variation and isolation. Current climate change predictions for the central Appalachians indicate that aquatic habitats will be subject to increased temperatures and increased drought stress, especially during the summer and early fall (Buzby and Perry 2000, p. 1774; Byers and Norris 2011, p. 20). There will likely be an increase in the variability of stream flow, and the frequency of extreme events such as drought, severe storms, and flooding is likely to increase statewide (Buzby and Perry 2000, p. 1774; Byers and Norris 2011, p. 20). While the currently available information on the effects of climate change is not precise enough to predict the extent to which climate change will degrade diamond darter habitat, species with limited ranges that are faced with either natural or anthropomorphic barriers to movement, such as the dams that fragmented and isolated the historical diamond darter habitat, have been found to be especially vulnerable to the effects of climate change (Byers and Norris 2011, p. 18). Thus, the small population size and distribution of the diamond darter makes the species particularly susceptible to risks from catastrophic events, loss of genetic variation, and climate change.

Summary of Factor E

In summary, because the diamond darter has a limited geographic range and small population size, it is subject to several other ongoing, natural and manmade threats. These threats include the spread of *Didymosphenia geminate;* loss of genetic fitness; and susceptibility to spills, catastrophic events, and impacts from climate change. These threats to the diamond darter are current and are expected to continue rangewide into the future. The severity of these threats is high because of the reduced range and population size which result in a reduced ability to adapt to environmental change. Further, our review of the best available scientific and commercial information indicates that these threats are likely to continue or increase in the future.

Proposed Determination

We have carefully assessed the best scientific and commercial information

available regarding the past, present, and future threats to the diamond darter. The primary threats to the diamond darter are related to the present or threatened destruction, modification, or curtailment of its habitat or range (Factor A). The species is currently known to exist only in the lower Elk River, West Virginia. This portion of the watershed is currently impacted by ongoing water quality degradation and habitat loss from activities associated with coal mining and oil and gas development, siltation from these and other sources, inadequate sewage and wastewater treatment, and direct habitat loss and alteration. The impoundment of rivers in the Ohio River Basin, such as the Kanawha, Ohio, and Cumberland Rivers, has eliminated much of the species' habitat and isolated the existing population from other watersheds that the species historically occupied.

The species could potentially be vulnerable to overutilization for scientific purposes (Factor B), but the significance of this threat is adequately regulated through the State's administration of scientific collecting permits. There are no known threats to the diamond darter from disease or predation (Factor C). Existing Federal and State regulatory mechanisms such as the Clean Water Act, Surface Mining Control and Reclamation Act, and the West Virginia Sediment Logging Control Act do not provide adequate protections for the diamond darter or its aquatic habitat (Factor D). The small size and restricted range of the remaining diamond darter population makes it particularly susceptible to the spread of didymo and effects of genetic inbreeding, and extirpation from spills and other catastrophic events (Factor E). In addition to the individual threats discussed under Factors A and E, each of which is sufficient to warrant the species' listing, the cumulative effect of Factors A, D, and E is such that the magnitude and imminence of threats to the diamond darter are significant throughout its entire current range.

The Act defines an endangered species as any species that is ''in danger of extinction throughout all or a significant portion of its range'' and a threatened species as any species ''that is likely to become endangered throughout all or a significant portion of its range within the foreseeable future.'' We find that the diamond darter, which consists of only one population (occurrence), is presently in danger of extinction throughout its entire range, due to the immediacy, severity, and scope of the threats described above. Because the species is currently limited to one small, isolated population in an aquatic environment that is currently facing numerous, severe, and ongoing water quality threats which are likely to increase over time, we find that the diamond darter does not meet the definition of a threatened species. Therefore, on the basis of the best available scientific and commercial information, we propose listing the diamond darter as endangered in accordance with sections 3(6) and 4(a)(1) of the Act.

Under the Act and our implementing regulations, a species may warrant listing if it is threatened or endangered throughout all or a significant portion of its range. The diamond darter proposed for listing in this rule is highly restricted in its range and the threats to the survival of the species are not restricted to any particular significant portion of that range. Therefore, we assessed the status of the species throughout its entire range. Accordingly, our assessment and proposed determination apply to the species throughout its entire range.

Available Conservation Measures

Conservation measures provided to species listed as endangered or threatened under the Act include recognition, recovery actions, requirements for Federal protection, and prohibitions against certain practices. Recognition of the species through its listing results in public awareness and conservation by Federal, State, Tribal, and local agencies, private organizations, and individuals. The Act encourages cooperation with the States and requires that recovery actions be carried out for all listed species. The protection measures required of Federal agencies and the prohibitions against certain activities are discussed in Effects of Critical Habitat Designation and are further discussed, in part, below.

The primary purpose of the Act is the conservation of endangered and threatened species and the ecosystems upon which they depend. The ultimate goal of such conservation efforts is the recovery of these listed species, such that they no longer need the protective measures of the Act. Subsection 4(f) of the Act requires the Service to develop and implement recovery plans for the conservation of endangered and threatened species, unless we find that such a plan will not promote the conservation of the species. The recovery planning process involves the identification of actions that are necessary to halt or reverse the species' decline by addressing the threats to its survival and recovery. The goal of this process is to restore listed species to a point where they are secure, self-sustaining, and functioning components of their ecosystems.

Recovery planning includes the development of a recovery outline shortly after a species is listed, and preparation of a draft and final recovery plan. The recovery outline guides the immediate implementation of urgent recovery actions and describes the process to be used to develop a recovery plan. Revisions of the plan may be done to address continuing or new threats to the species, as new substantive information becomes available. The recovery plan identifies site-specific management actions that will achieve recovery of the species, measurable criteria that set a trigger for review of the five factors that control whether a species remains endangered or may be downlisted or delisted, and methods for monitoring recovery progress. Recovery plans also establish a framework for agencies to coordinate their recovery efforts and provide estimates of the cost of implementing recovery tasks. Recovery teams (comprising species experts, Federal and State agencies, nongovernmental organizations, and stakeholders) are often established to develop recovery plans. When completed, the recovery outline, draft recovery plan, and the final recovery plan will be available on our Web site (*http://www.fws.gov/endangered*), or from our West Virginia Field Office (see **FOR FURTHER INFORMATION CONTACT**).

Implementation of recovery actions generally requires the participation of a broad range of partners, including other Federal agencies, states, tribes, nongovernmental organizations, businesses, and private landowners. Examples of recovery actions include habitat restoration (e.g., restoration of native vegetation), research, captive propagation and reintroduction, and outreach and education. The recovery of many listed species cannot be accomplished solely on Federal lands because their range may occur primarily or solely on non-Federal lands. To achieve recovery of these species requires cooperative conservation efforts on private, State, and Tribal lands.

If this species is listed, funding for recovery actions will be available from a variety of sources, including Federal budgets, state programs, and cost share grants for non-Federal landowners, the academic community, and nongovernmental organizations. In addition, pursuant to section 6 of the Act, the States of West Virginia, Kentucky, Tennessee, and Ohio would be eligible for Federal funds to implement management actions that promote the protection or recovery of

the diamond darter. Information on our grant programs that are available to aid species recovery can be found at: *http://www.fws.gov/grants.*

Although the diamond darter is only proposed for listing under the Act at this time, please inform us of your interest in participating in recovery efforts for this species. Additionally, we invite you to submit any new information on this species whenever it becomes available and any information you may have for recovery planning purposes (see **FOR FURTHER INFORMATION CONTACT**).

Section 7(a) of the Act requires Federal agencies to evaluate their actions with respect to any species that is proposed or listed as endangered or threatened and with respect to its critical habitat, if any is designated. Regulations implementing this interagency cooperation provision of the Act are codified at 50 CFR part 402. Section 7(a)(4) of the Act requires Federal agencies to confer with the Service on any action that is likely to jeopardize the continued existence of a species proposed for listing or result in destruction or adverse modification of proposed critical habitat. If a species is listed, section 7(a)(2) of the Act requires Federal agencies to ensure that activities they authorize, fund, or carry out are not likely to jeopardize the continued existence of the species or destroy or adversely modify its critical habitat. If a Federal action may affect a listed species or its critical habitat, the responsible Federal agency must enter into formal consultation with the Service.

Federal agency actions within the species' habitat that may require conference or consultation or both as described in the preceding paragraph include the issuance of section 404 Clean Water Act permits by the Army Corps of Engineers; construction and management of gas pipeline and power line rights-of-way or hydropower facilities by the Federal Energy Regulatory Commission; construction and maintenance of roads, highways, and bridges by the Federal Highway Administration; pesticide regulation by the U.S. Environmental Protection Agency; and issuance of coal mining permits by the Office of Surface Mining.

The Act and its implementing regulations set forth a series of general prohibitions and exceptions that apply to all endangered wildlife. The prohibitions of section 9(a)(2) of the Act, codified at 50 CFR 17.21 for endangered wildlife, in part, make it illegal for any person subject to the jurisdiction of the United States to take (includes harass, harm, pursue, hunt, shoot, wound, kill, trap, capture, or collect; or to attempt any of these), import, export, ship in interstate commerce in the course of commercial activity, or sell or offer for sale in interstate or foreign commerce any listed species. Under the Lacey Act (18 U.S.C. 42–43; 16 U.S.C. 3371–3378), it is also illegal to possess, sell, deliver, carry, transport, or ship any such wildlife that has been taken illegally. Certain exceptions apply to agents of the Service and state conservation agencies.

We may issue permits to carry out otherwise prohibited activities involving endangered and threatened wildlife species under certain circumstances. Regulations governing permits are codified at 50 CFR 17.22 for endangered species, and at 17.32 for threatened species. With regard to endangered wildlife, a permit must be issued for the following purposes: for scientific purposes, to enhance the propagation or survival of the species, and for incidental take in connection with otherwise lawful activities.

It is our policy, as published in the **Federal Register** on July 1, 1994 (59 FR 34272), to identify to the maximum extent practicable at the time a species is listed, those activities that would or would not constitute a violation of section 9 of the Act. The intent of this policy is to increase public awareness of the effect of a proposed listing on proposed and ongoing activities within the range of species proposed for listing. The following activities could potentially result in a violation of section 9 of the Act; this list is not comprehensive:

(1) Unauthorized collecting, handling, possessing, selling, delivering, carrying, or transporting of the species, including import or export across State lines and international boundaries, except for properly documented antique specimens at least 100 years old, as defined by section 10(h)(1) of the Act.

(2) Violation of any permit that results in harm or death to any individuals of this species or that results in degradation of its habitat to an extent that essential behaviors such as breeding, feeding and sheltering are impaired.

(3) Unlawful destruction or alteration of diamond darter habitats (e.g., unpermitted instream dredging, impoundment, water diversion or withdrawal, channelization, discharge of fill material) that impairs essential behaviors such as breeding, feeding, or sheltering, or results in killing or injuring a diamond darter.

(4) Unauthorized discharges or dumping of toxic chemicals or other pollutants into waters supporting the diamond darter that kills or injures individuals, or otherwise impairs essential life-sustaining behaviors such as breeding, feeding, or finding shelter.

Other activities not identified above will be reviewed on a case-by-case basis to determine if a violation of section 9 of the Act may be likely to result from such activity should we list the diamond darter as endangered. Compliance with a State permit, or lack of need for a State permit, does not necessarily provide coverage against violations of section 9 of the Act, particularly if the State review has not yet included protections to ensure that adverse effects to federally listed species are avoided. The Service does not consider the description of future and ongoing activities provided above to be exhaustive; we provide them simply as information to the public.

Questions regarding whether specific activities would constitute a violation of section 9 of the Act should be directed to the West Virginia Field Office (see **FOR FURTHER INFORMATION CONTACT**). Requests for copies of the regulations concerning listed animals and general inquiries regarding prohibitions and permits may be addressed to the U.S. Fish and Wildlife Service, Endangered Species Permits, 300 Westgate Center Drive, Hadley, MA 01035–9589 (Phone 413–253–8200; Fax 413–253–8482) or information can be viewed at our permit Web site at *http://www.fws.gov/endangered/permits/how-to-apply.html*.

Critical Habitat Designation for Diamond Darter

Background

It is our intent to discuss below only those topics directly relevant to the designation of critical habitat for the diamond darter in this section of the proposed rule.

Critical habitat is defined in section 3 of the Act as:

(1) The specific areas within the geographical area occupied by the species, at the time it is listed in accordance with the Act, on which are found those physical or biological features;

(a) Essential to the conservation of the species;

(b) Which may require special management considerations or protection; and

(2) Specific areas outside the geographical area occupied by the species at the time it is listed, upon a determination that such areas are essential for the conservation of the species.

Conservation, as defined under section 3 of the Act, means to use and the use of all methods and procedures

that are necessary to bring an endangered or threatened species to the point at which the measures provided pursuant to the Act are no longer necessary. Such methods and procedures include, but are not limited to, all activities associated with scientific resources management such as research, census, law enforcement, habitat acquisition and maintenance, propagation, live trapping, and transplantation, and in the extraordinary case where population pressures within a given ecosystem cannot be otherwise relieved, may include regulated taking.

Critical habitat receives protection under section 7 of the Act through the requirement that Federal agencies ensure, in consultation with the Service, that any action they authorize, fund, or carry out is not likely to result in the destruction or adverse modification of critical habitat. The designation of critical habitat does not affect land ownership or establish a refuge, wilderness, reserve, preserve, or other conservation area. Such designation does not allow the government or public to access private lands. Such designation does not require implementation of restoration, recovery, or enhancement measures by non-Federal landowners. Where a landowner requests Federal agency funding or authorization for an action that may affect a listed species or critical habitat, the consultation requirements of section 7(a)(2) of the Act would apply, but even in the event of a destruction or adverse modification finding, the obligation of the Federal action agency and the landowner is not to restore or recover the species, but to implement reasonable and prudent alternatives to avoid destruction or adverse modification of critical habitat.

Under the first prong of the Act's definition of critical habitat, areas within the geographical area occupied by the species at the time it was listed are included in a critical habitat designation if they contain physical or biological features (1) which are essential to the conservation of the species, and (2) which may require special management considerations or protection. For these areas, critical habitat designations identify, to the extent known using the best scientific and commercial data available, those physical or biological features that are essential to the conservation of the species (such as space, food, cover, and protected habitat). In identifying those physical and biological features within an area, we focus on the principal biological or physical constituent elements (primary constituent elements such as roost sites, nesting grounds, seasonal wetlands, water quality, tide, soil type) that are essential to the conservation of the species. Primary constituent elements are those specific elements of physical or biological features that provide for a species' life-history processes, and are essential to the conservation of the species.

Under the second prong of the Act's definition of critical habitat, we can designate critical habitat in areas outside the geographical area occupied by the species at the time it is listed, upon a determination that such areas are essential for the conservation of the species. For example, an area currently occupied by the species but that was not occupied at the time of listing may be essential to the conservation of the species and may be included in the critical habitat designation. We designate critical habitat in areas outside the geographical area occupied by a species only when a designation limited to its range would be inadequate to ensure the conservation of the species.

Section 4 of the Act requires that we designate critical habitat on the basis of the best scientific data available. Further, our Policy on Information Standards Under the Endangered Species Act (published in the **Federal Register** on July 1, 1994 (59 FR 34271)), the Information Quality Act (section 515 of the Treasury and General Government Appropriations Act for Fiscal Year 2001 (Pub. L. 106–554; H.R. 5658)), and our associated Information Quality Guidelines, provide criteria, establish procedures, and provide guidance to ensure that our decisions are based on the best scientific data available. They require our biologists, to the extent consistent with the Act and with the use of the best scientific data available, to use primary and original sources of information as the basis for recommendations to designate critical habitat.

When we are determining which areas should be designated as critical habitat, our primary source of information is generally the information developed during the listing process for the species. Additional information sources may include the recovery plan for the species, articles in peer-reviewed journals, conservation plans developed by States and counties, scientific status surveys and studies, biological assessments, other unpublished materials, or experts' opinions or personal knowledge.

Habitat is dynamic, and species may move from one area to another over time. Climate change will be a particular challenge for biodiversity because the interaction of additional stressors associated with climate change and current stressors may push species beyond their ability to survive (Lovejoy 2005, pp. 325–326). The synergistic implications of climate change and habitat fragmentation are the most threatening facet of climate change for biodiversity (Hannah and Lovejoy 2003, p. 4). In particular, we recognize that climate change may cause changes in the arrangement of occupied habitat and stream reaches. Current climate change predictions for the central Appalachians indicate that aquatic habitats will be subject to increased temperatures and increased drought stress, especially during the summer and early fall. There will likely be an increase in the variability of stream flow, and the frequency of extreme events, such as drought, severe storms, and flooding, is likely to increase statewide (Buzby and Perry 2000, p. 1774; Byers and Norris 2011, p. 20). Species with limited ranges and that are faced with either natural or anthropomorphic barriers to movement, such as the dams that fragment and isolate diamond darter habitat, have been found to be especially vulnerable to the effects of climate change (Byers and Norris 2011, p. 18).

Precise estimates of the location and magnitude of impacts from global climate change and increasing temperatures cannot be made from the currently available information. Nor are we currently aware of any climate change information specific to the habitat of the diamond darter that would indicate what areas may become important to the species in the future. However, among the most powerful strategies for the long-term conservation of biodiversity is establishment of networks of intact habitats and conservation areas that represent a full range of ecosystems, and include multiple, robust examples of each type. The principles of resiliency and redundancy are at the core of many conservation planning efforts, and are increasingly important as the stresses of climate change erode existing habitats (Byers and Norris 2011, p. 24). Therefore, we have attempted to incorporate these principles into our proposed determination of critical habitat by delineating two units that are representative of the range of habitats currently and previously occupied by the species.

We recognize that critical habitat designated at a particular point in time may not include all of the habitat areas that we may later determine are necessary for the recovery of the species. For these reasons, a critical habitat designation does not signal that

habitat outside the designated area is unimportant or may not be needed for recovery of the species. Areas that are important to the conservation of the species, both inside and outside the critical habitat designation, will continue to be subject to: (1) Conservation actions implemented under section 7(a)(1) of the Act, (2) regulatory protections afforded by the requirement in section 7(a)(2) of the Act for Federal agencies to ensure their actions are not likely to jeopardize the continued existence of any endangered or threatened species, and (3) section 9's prohibition on taking any individual of the species, including taking caused by actions that affect habitat. Federally funded or permitted projects affecting listed species outside their designated critical habitat areas may still result in jeopardy findings in some cases. These protections and conservation tools will continue to contribute to recovery of this species. Similarly, critical habitat designations made on the basis of the best available information at the time of designation will not control the direction and substance of future recovery plans, habitat conservation plans (HCPs), or other species conservation planning efforts if new information available at the time of these planning efforts calls for a different outcome.

Prudency Determination

Section 4(a)(3) of the Act, as amended, and implementing regulations (50 CFR 424.12), require that, to the maximum extent prudent and determinable, the Secretary designate critical habitat at the time the species is determined to be endangered or threatened. Our regulations (50 CFR 424.12(a)(1)) state that the designation of critical habitat is not prudent when one or both of the following situations exist: (1) The species is threatened by taking or other human activity, and identification of critical habitat can be expected to increase the degree of threat to the species; or (2) such designation of critical habitat would not be beneficial to the species.

There is no documentation of commercial or private collection of the diamond darter. Although that activity is identified as a possible but unlikely threat to the species, the significance of collection to the viability of the species' populations is not known. In the absence of a finding that the designation of critical habitat would increase threats to a species, if there are any benefits to a critical habitat designation, then a prudent finding is warranted. The potential benefits include: (1) Triggering consultation under section 7 of the Act, in new areas for actions in which there may be a Federal nexus where it would not otherwise occur because, for example, it is or has become unoccupied or the occupancy is in question; (2) focusing conservation activities on the most essential features and areas; (3) providing educational benefits to State or county governments or private entities; and (4) preventing people from causing inadvertent harm to the species.

The primary regulatory effect of critical habitat is the section 7(a)(2) requirement that Federal agencies refrain from taking any action that destroys or adversely modifies critical habitat. At this time, the diamond darter occurs on State and private lands along the Elk River in West Virginia. Lands proposed for designation as critical habitat would be subject to Federal actions that trigger section 7 consultation requirements. These include land management planning and Federal agency actions. There may also be educational or outreach benefits to the designation of critical habitat. These benefits include the notification of lessees and the general public of the importance of protecting the habitats of both of these rare species.

In the case of the diamond darter, these aspects of critical habitat designation would potentially benefit the conservation of the species. Therefore, if the threat of commercial or private collection exists for the species, it is outweighed by the conservation benefits derived from the designation of critical habitat. We therefore find that designation of critical habitat is prudent for the diamond darter.

Critical Habitat Determinability

Having determined that designation is prudent, under section 4(a)(3) of the Act we must find whether critical habitat for the eight species is determinable. Our regulations at 50 CFR 424.12(a)(2) state that critical habitat is not determinable when one or both of the following situations exist:

(i) Information sufficient to perform required analyses of the impacts of the designation is lacking, or

(ii) The biological needs of the species are not sufficiently well known to permit identification of an area as critical habitat.

When critical habitat is not determinable, the Act allows the Service an additional year to publish a critical habitat designation (16 U.S.C. 1533(b)(6)(C)(ii)).

We reviewed the available information pertaining to the biological needs of the species and habitat characteristics where these species are located. This and other information represent the best scientific data available and led us to conclude that the designation of critical habitat is determinable for diamond darter.

Physical or Biological Features

In accordance with section 3(5)(A)(i) and 4(b)(2) of the Act and regulations at 50 CFR 424.12, in determining which areas within the geographical area occupied by the species at the time of listing to designate as critical habitat, we consider the physical or biological features that are essential to the conservation of the species and which may require special management considerations or protection (50 CFR 424.12(b)). These include, but are not limited to:

(1) Space for individual and population growth and for normal behavior;

(2) Food, water, air, light, minerals, or other nutritional or physiological requirements;

(3) Cover or shelter;

(4) Sites for breeding, reproduction, or rearing (or development) of offspring; and

(5) Habitats that are protected from disturbance or are representative of the historical, geographical, and ecological distributions of a species.

We derive the specific physical or biological features required for the diamond darter from studies of this species' habitat, ecology, and life history as described below. Because diamond darters are so rare, there is very little information available with which to quantitatively define the optimal or range of suitable conditions for a specific biological or physical feature needed by the species. However, the available, species-specific information, in combination with information from the closely related crystal darter and other similar darter species, provides sufficient information to qualitatively discuss the physical and biological features needed to support the species. Based on this review, we have determined that the following physical and biological features are essential for the diamond darter:

Space for Individual and Population Growth and for Normal Behavior

The diamond darter inhabits moderate to large, warmwater streams with clean sand and gravel substrates (Simon and Wallus 2006, p. 52). Moderate to large warmwater streams are defined as fourth to eighth order streams with a drainage area exceeding 518 km^2 (200 mi^2) and temperatures exceeding 20 °C (68 °F) at some point during the year (Winger 1981, p. 40;

Oliverio and Anderson 2008, p. 12). In the Elk River, the diamond darter has been collected in transition areas between riffles and pools where substrates were greater than 40 percent sand and gravel (Welsh *et al.* 2004, p. 6; Osier 2005, p. 11; Welsh and Wood 2008, pp. 62–68). These habitat characteristics are similar to those described for the crystal darter (Welsh *et al.* 2008, p. 1). Many studies have found that the crystal darter does not occur in areas with large amounts of mud, clay, detritus, or submerged vegetation (George *et al.* 1996, p. 71; Shepard *et al.* 1999 in Osier 2005, p. 11; NatureServe 2008, p. 1). The presence of clean sand and gravel substrates with low levels of silt appears to be a critical component of diamond darter habitat.

Siltation (excess sediments suspended or deposited in a stream) has been shown to negatively impact fish growth, survival, and reproduction (Berkman and Rabeni 1987, p. 285). Both the diamond darter and the crystal darter are noted to be particularly susceptible to the effects of siltation and may have been extirpated from historical habitats due to excessive siltation (Grandmaison *et al.* 2003, pp. 17–18). Siltation can result from increased erosion along stream banks and roads and deposition caused by land-based disturbances (Rosgen 1996, p. 1-3). Coal mining, oil and gas development, timber harvesting, and all-terrain vehicle usage have been identified as land-based disturbances that are sources of increased siltation within the Elk River watershed (USEPA 2001b, pp. 1–1, 3–4, 6; WVDEP 2008b, p. 1). Increased siltation can also result from stream bank erosion and channel instability (Rosgen 1996, p. 1–3). Geomorphically stable streams transport sediment while maintaining their horizontal and vertical dimensions (width/depth ratio and cross-sectional area), pattern (sinuosity), longitudinal profile (riffles, runs, and pools), and substrate composition (Rosgen 1996, pp. 1–3 to 1–6). Thus, geomorphically stable streams maintain the riffles and pools and silt-free substrates necessary to provide typical habitats for the diamond darter.

Fragmentation and destruction of habitat has reduced the current range of the diamond darter to only one stream and has isolated the last remaining population, reducing the currently available space for rearing and reproduction. Small, isolated populations may have reduced adaptive capability and an increased likelihood of extinction (Gilpin and Soulé 1986, pp. 32–34; Noss and Cooperrider 1994, p. 61). Continuity of water flow and connectivity between remaining suitable habitats is essential in preventing further fragmentation of the species' habitat and population. Free movement of water within the stream allows darters to move between available habitats. This is necessary to provide sufficient space for the population to grow and to promote genetic flow throughout the population. Continuity of habitat helps to maintain space for spawning, foraging, and resting sites, and also permits improvement in water quality and water quantity by allowing unobstructed water flow throughout the connected habitats. Thus, free movement of water that provides connectivity between habitats is necessary to support diamond darter populations.

There is little information available on the amount of space needed by either the diamond darter or the crystal darter for population growth and normal behavior. Many individuals of other darter species that use similar habitat types have been found to remain in one habitat area during short-term mark and recapture studies. However upstream and downstream movements of other darters between riffles and between riffles and pools have been documented. Within-year movements typically ranged from 36 to 420 meters (118.1 to 1,378.0 ft), and movements of up to 4.8 km (3.0 mi) have been documented (May 1969, pp. 86–87, 91; Freeman 1995, p. 363; Roberts and Angermeier 2007, pp. 422, 424–427).

In addition, a number of researchers have suggested that *Crystallaria* move upstream to reproduce when they mature, and that free-floating young-of-the-year disperse considerable distances downstream during spring high water where they eventually find suitable habitat to grow and mature (Stewart *et al.* 2005, p. 472; Hrabik 2012, p. 1). This suggests that *Crystallaria* may make long-distance movements in large rivers. This type of migratory behavior has been documented in bluebreast darters (*Etheostoma camurum*) (Trautman 1981, pp. 673–675). This species inhabits moderate to large-sized streams with low turbidity and is typically found in riffles, similar to the diamond darter. Trautman (1981, pp. 673–675) found that bluebreast darters were well distributed throughout a 51-km (32-mile) reach of river during the breeding season, but that there was a reduction in numbers in the upper half of this reach starting in September and continuing through late winter to early spring. There was a corresponding increase in numbers in the lower half of the reach during this time. Individual darters captured in the spring were documented to have moved 152 m (500 ft) in a single day. In September and October, Trautman captured bluebreast darters in deep, low-velocity pools, which are not typical habitats for the species. He concluded that bluebreast and other darter species migrated upstream in spring and downstream in the fall (Trautman 1981, pp. 673–675). Based on this information, free movement between habitat types within a significant length of stream may be important to provide sufficient space to support normal behavior and genetic mixing of the diamond darter.

Based on the biological information and needs discussed above, we identify riffle-pool complexes in moderate to large-sized (fourth to eighth order), warmwater streams that are geomorphically stable with moderate current, clean sand and gravel substrates, and low levels of siltation to be physical or biological features essential to the conservation of the diamond darter.

Food, Water, Air, Light, Minerals, or Other Nutritional or Physiological Requirements

Feeding habits of the diamond darter in the wild are not known. However, it is expected that, similar to the crystal darter, adult diamond darters are benthic invertivores (NatureServe 2008, p. 8). Crystal darters eat midge and caddisfly larvae, and water mites in lesser quantities (Osier 2005, p. 13). Juvenile and young crystal darters feed on immature stages of aquatic insects such as mayflies, craneflies, blackflies, caddisflies, and midges (Simon and Wallus 2006, pp. 56–57). Diamond darters kept in captivity were fed and survived on live blackworms, daphnia, and dragonfly larvae, frozen bloodworms, and adult brine shrimp (Ruble *et al.* 2010, p. 4). Diamond darters may use an ambush foraging tactic by burying in the sand and darting out at prey (Robinson 1992 and Hatch 1997 in Osier 2005, pp. 12–13; NatureServe 2008, p. 1; Ruble 2011c, p. 1). When in captivity, diamond darters were also observed resting on the bottom of the tank and taking food from slightly above their position, in front of them, or off the bottom (Welsh 2009c, p. 1). Juvenile diamond darters hatched in captivity had teeth and a large gape width, which suggests that the larvae may feed on other smaller fish larvae (Ruble *et al.* 2010, p. 15).

Researchers were unable to confirm this hypothesis due to poor survivorship of the diamond darter larvae and lack of available smaller fish larvae to provide as a potential food source (Ruble *et al.* 2010, pp. 12–14). As explained in the Life History and Habitat section above,

the juveniles may also eat zooplankton prey, which is more typical for pelagic larval percids (Rakes 2011, p. 1). This information suggests that loose sandy substrates suitable for ambush feeding behavior and healthy populations of benthic invertebrates and fish larvae for prey items are required to support the feeding requirements of the diamond darter.

Like most other darters, the diamond darter depends on clean water and perennial stream flows to successfully complete its life cycle (Page 1983, pp. 160–170). Sufficient water quality and quantity is required to support normal reproduction, growth, and survival. Because so few diamond darters have been captured, there are insufficient data available to quantitatively define the standards for water quantity or quality that are suitable to support the species. However, some data are available from areas that are known to support the diamond darter or the closely related crystal darter that provide examples of suitable conditions.

Water quantity, including depth and current velocity, are known to be important habitat characteristics that determine whether an area is suitable to support a specific species of fish (Osier 2005, p. 3). Sites where *Crystallaria* have been captured are consistently described as having moderate to strong velocities (Grandmaison *et al.* 2003, p. 4; Osier 2005, p. 15). Moderate to strong velocities contribute to the clean swept substrates and lack of silt commonly reported in documented crystal darter habitat (Osier 2005, p. 11). In the Elk River, the diamond darter has been collected from transition areas between riffles and pools at depths from 50 to 150 cm (20 to 59 in) and in moderate to strong velocities that are typically greater than 20 cm/sec (8 in/sec) (Osier 2005, p. 31). Similarly, the crystal darter has been described as generally inhabiting waters deeper than 60 cm (24 inches) with strong currents typically greater than 32 cm/sec (13 inch/sec) (Grandmaison *et al.* 2003, p. 4). Crystal darters were collected in Arkansas in water from 114 to 148 cm (45 to 58 in) deep with current velocities between 46 and 90 cm/sec (18 and 35 in/sec) (George *et al.* 1996 in Grandmaison *et al.* 2003, p. 4). Many of the measurements were taken at base or low flows when it is easiest to conduct fish surveys. Current velocity, water depth, and stream discharge are interrelated and variable, dependent on seasonal and daily patterns of rainfall (Bain and Stevenson 1999, p. 77; Grandmaison *et al.* 2003, p. 4). Therefore, velocities and depths at suitable habitat sites may change over time, or diamond darters may also move to other locations within a stream as seasonal and daily velocity and depth conditions change.

Water quality is also important to the persistence of the diamond darter. Specific water quality requirements (such as temperature, dissolved oxygen, pH, and conductivity) for the species have not been determined, but existing data provide some examples of conditions where *Crystallaria* were present. Diamond darters were successfully maintained in captivity when water temperatures did not go below 2 °C (35.6 °F) in the winter or above 25 °C (77 °F) in the summer (Ruble *et al.* 2010, p. 4). In Arkansas, crystal darter capture areas had dissolved oxygen levels that ranged from 6.81 to 11.0 parts per million; pH levels from 5.7 to 6.6; specific conductivities from 175 to 250 μ*S*/cm, and water temperatures from 14.5 to 26.8 °C (58 to 80 °F) (George *et al.* 1996, p. 71). In general, optimal water quality conditions for warmwater fishes are characterized as having moderate stream temperatures, high dissolved oxygen concentrations, and near-neutral pH levels. They are also characterized as lacking harmful levels of conductivity or pollutants including inorganic contaminants like iron, manganese, selenium, and cadmium; and organic contaminants such as human and animal waste products, pesticides and herbicides, fertilizers, and petroleum distillates (Winger 1981, pp. 36–38; Alabama Department of Environmental Management 1996, pp. 13–15; Maum and Moulton undated, pp. 1–2).

Good water quality that is not degraded by inorganic or organic pollutants, low dissolved oxygen, or excessive conductivity is an important habitat component for the diamond darter.

As described in the Summary of Factors Affecting the Species section above, impoundment of many rivers that historically supported the diamond darter has altered the quantity and flow of water in those rivers. This has reduced or eliminated riffle habitats, reduced current velocities, and increased the amount of fine particles in the substrate (Rinne *et al.* 2005, pp. 3–5, 432–433). Diamond darters have been extirpated from many areas as a result (Grandmaison *et al.* 2003, p. 18; Trautman 1981, p. 25). Excessive water withdrawals can also reduce current velocities, reduce water depth, increase temperatures, concentrate pollution levels, and result in deposition of fine particles in the substrate, making the areas less suitable to support the diamond darter (PSU 2010, p. 9; Freeman and Marcinek 2006, p. 445). An ample and unimpeded supply of flowing water that closely resembles natural peaks and lows typically provides a means of maintaining riffle habitats, transporting nutrients and food items, moderating water temperatures and dissolved oxygen levels, removing fine sediments that could damage spawning or foraging habitats, and diluting nonpoint-source pollutants, and is thus essential to the diamond darter.

Based on the biological information and needs discussed above, we identify perennial streams containing riffle-pool transition areas with moderate velocities, seasonally moderated temperatures, and good water quality with healthy populations of benthic invertebrates and fish larvae for prey items and loose, sandy substrates to be physical or biological features essential to the conservation for the diamond darter.

Cover or Shelter

Diamond darters and crystal darters typically have been captured in riffle-pool transition areas with predominately (greater than 20 percent each) sand and gravel substrates (Osier 2005, pp. 51–52). Diamond darters will bury in these types of substrates for cover and shelter. Individuals observed in captivity were frequently seen either completely buried in the sand during the day or partially buried with only the head (eyes and top of the snout) out of the sand. However, individuals were often on top of the sand at night time (Welsh 2009c, p. 1). Burying occurred by the individual rising slightly up above the substrate and then plunging headfirst into the sand and using its tail motion to burrow (Welsh 2009c, p. 1). This type of burying behavior has also been reported in the crystal darter (Osier 2005, p. 11; NatureServe 2008, p. 1). Heavily embedded substrates may impede this behavior. Embeddedness is the degree that cobble or gravel substrates are impacted by being surrounded or covered by fine silty materials (Shipman 2000, p. 12). Embedded substrates are not easily dislodged, and would therefore be difficult for the diamond darter to burrow into for cover. Heavily embedded substrates can be the result of human activities increasing the amount of siltation occurring in the stream (Shipman 2000, p. 12). While diamond darter capture sites in the Elk River have had a sparse (25–50 percent) to low (less than 25 percent) degree of embeddedness, these sites were less embedded than other surrounding areas (Shipman 2000, p. 12; Welsh *et al.* 2004, p. 7; Osier 2005, p. 57), and lower levels

of embeddedness are preferred by the diamond darter.

Variability in the substrate and available habitat is also an important sheltering requirement for the diamond darter. Darters may shift to different habitat types due to changing environmental conditions such as high water or warm temperatures (Osier 2005, p. 7). Deeper or sheltered habitats may provide refuge during warm weather and it has been suggested that *Crystallaria* species may use deeper pools during the day (Osier 2005, p. 10). Substrate variety, such as the presence of boulders or woody materials, provides velocity shelters for young darters during high flows (Osier 2005, p. 4).

Based on the biological information and needs discussed above, we identify riffle-pool transition areas with relatively sand and gravel substrates, as well as access to a variety of other substrate and habitat types, including pool habitats, to be physical or biological cover and shelter features essential to the conservation for the diamond darter.

Sites for Breeding, Reproduction, or Rearing (or Development) of Offspring

Very little information is available on reproductive biology and early life history of the diamond darter (Welsh *et al.* 2008, p. 1; Ruble and Welsh 2010, p. 1), and to date, only one young-of-the-year of this species has been found in the wild. We have not been able to obtain specific information on this collection, which probably occurred in 2007 in the Elk River near the confluence with the Kanawha River, West Virginia (Cincotta 2009a, p. 1). However, research on reproductive biology of the species was recently initiated by Conservation Fisheries Inc. (CFI) in partnership with the USGS West Virginia Cooperative Fish and Wildlife Research Unit at West Virginia University (WVU). Five individual diamond darters, consisting of at least three females, one male, and one of undetermined sex, have been held in captivity at the CFI facility and were maintained in simulated stream conditions. Water temperature and daylight were also adjusted throughout the seasons to simulate natural fluctuations that would be experienced in the wild (Ruble and Welsh 2010, p. 2).

Spawning began when water temperatures were consistently above 15 °C and ceased when temperatures reached 22 °C (Ruble 2011b, p. 2). Females showed signs of being gravid from late March to May (Ruble *et al.* 2010, p. 11–12). Both eggs and hatched larvae were observed in April (Ruble *et al.* 2010, p. 11–12; Ruble 2011, p. 1). Peak breeding time is likely mid-April when water temperatures range from 15 to 20 °C (59 to 68 °F) (Ruble *et al.* 2010, p. 12). Although incubation time is difficult to determine because most eggs that survived already showed considerable development, it is estimated that at 15 °C (59 °F), hatch time is 7 to 9 days (Ruble *et al.* 2010, p. 11). Although eggs were produced in both years, no young survived and matured during either year (Ruble *et al.* 2010, pp. 11–12; Ruble 2011b, p. 1).

Because no young have been successfully maintained in captivity and no studies of wild populations are available, we are not able to quantify the range of water quality conditions needed for successful reproduction. Factors that can impair egg viability include high temperatures, low oxygen levels, siltation, and other water quality conditions (Ruble 2011, p. 2). Inadequate water flow through the substrate or low oxygen levels within the substrate can lead to poor egg development or poor larval condition (Ruble 2011, p. 2).

There is also some information available on reproduction of the crystal darter (Welsh *et al.* 2008, p. 1). In Arkansas, the reproductive season was from late January through mid-April, roughly correlating with early April in the Ohio River Basin (George *et al.* 1996, p. 75; Simon and Wallus 2006, p. 52). Evidence suggests that females are capable of multiple spawning events and producing multiple clutches of eggs in one season (George *et al.* 1996, p. 75). Spawning occurs in the spring when the crystal darters lay their eggs in side channel riffle habitats over sand and gravel substrates in moderate current. Adult darters do not guard their eggs (Simon and Wallus 2006, p. 56). Embryos develop in the clean interstitial spaces of the coarse substrate (Simon and Wallus 2006, p. 56). After hatching, the larvae are pelagic and drift within the water column (Osier 2005, p. 12; Simon and Wallus 2006, p. 56; NatureServe 2008, p. 1).

Based on the biological information and needs discussed above, we identify streams with naturally fluctuating and seasonally moderated water temperatures, high dissolved oxygen levels, and clean, relatively silt-free sand and gravel substrates to be physical or biological breeding, reproduction, or rearing of offspring features essential to the conservation for the diamond darter.

Habitats That Are Protected From Disturbance or Are Representative of the Historical, Geographical, and Ecological Distributions of a Species

As described above, clean, stable substrates, good water quality, and healthy benthic invertebrate populations are habitat features essential to the diamond darter. Direct disturbance, alteration, or fill of instream habitat can degrade these essential features. Disturbance, alteration, and instream fill can kill or injure adult fish, young, or eggs; destabilize the substrates leading to increased sedimentation or erosion; and reduce the amount of available food and habitat to support fish populations. These impacts make the area less suitable for the fish such as the diamond darter (Reid and Anderson 1999, pp. 235–245; Levesque and Dube 2007, pp. 396–402; Welsh 2009d, p. 1; Penkal and Phillips 2011, pp. 6–7). Direct disturbance and instream construction can also increase substrate compaction and silt deposition within the direct impact area and downstream, reducing water flow through the substrate, and increasing substrate embeddedness (Reid and Anderson 1999, p. 243; Levesque and Dube 2007, pp. 396–397; Penkal and Phillips 2011, pp. 6–7). This can impede the normal burrowing behavior of the diamond darter required for successful foraging and shelter, degrade spawning habitat, result in the production of fewer and smaller eggs, and impair egg and larvae development (Reid and Anderson 1999, pp. 244–245; Levesque and Dube 2007, pp. 401–402). Intact riparian vegetation is also an important component of aquatic habitats that support the diamond darter. Darters are particularly susceptible to impacts associated with disturbance to riparian vegetation such as increased sedimentation and alteration of instream habitat characteristics (Jones *et al.* 1999, pp. 1461–1462; Pusey and Arthington 2003, p. 1). Removal of riparian vegetation can lead to decreases in fish species, such as the diamond darter, that do not guard eggs or that are dependent on swift, shallow water that flows over relatively sediment-free substrates (Jones *et al.* 1999, p. 1462). Thus, avoiding disturbances to stream beds and banks is important to maintaining stable substrates, food availability, successful reproduction, and habitat suitability for the diamond darter.

All current and historical capture locations of the diamond darter are from moderate to large, fourth to eighth order, warmwater streams within the Ohio River Watershed (Welsh 2008, p. 3;

SARP 2011, pp. 1–19). The species was historically distributed in at least four major drainages throughout the watershed and is now likely extirpated from Ohio, Kentucky, and Tennessee. The current range is restricted to a small segment of one river within West Virginia. Therefore, the current range of the species is not representative of the historical or geographical distribution of the species and not sufficient for the conservation of the diamond darter. Given the distribution is restricted to approximately 45 km (27.96 mi) within one river, the species is vulnerable to the threats of reduced fitness through genetic inbreeding, and extinction from a combination of cumulative effects or a single catastrophic event such as a toxic chemical spill (Gilpin and Soule 1986, pp. 23–33; Noss and Cooperrider 1994, p. 61). In addition, because the current range is isolated from other suitable habitats due to the presence of dams and impoundments, the species has limited ability to naturally expand its current range and recolonize previously occupied habitats (Warren *et al.* 2000 in Grandmaison *et al.* 2003, p. 18). A species distribution that includes populations in more than one moderate to large river within the Ohio River watershed would provide some protection against these threats and would be more representative of the historical geographic distribution of the species.

Based on the biological information and needs discussed above, we identify stable, undisturbed stream beds and banks, and ability for populations to be distributed in multiple moderate-to-large (fourth to eighth order) streams throughout the Ohio River watershed to be physical or biological features protected from disturbance or are representative of the historical, geographical, and ecological distributions that are essential to the conservation for the diamond darter.

Primary Constituent Elements for the Diamond Darter

Under the Act and its implementing regulations, we are required to identify the physical or biological features essential to the conservation of the diamond darter in areas occupied at the time of listing, focusing on the features' primary constituent elements. Primary constituent elements are those specific elements of physical or biological features that provide for a species' life-history processes and are essential to the conservation of the species.

Based on our current knowledge of the physical or biological features and habitat characteristics required to sustain the species' life-history processes, we determine that the primary constituent elements specific to the diamond darter are:

(1) Primary Constituent Element 1—A series of connected riffle-pool complexes with moderate velocities in moderate to large-sized (fourth to eighth order), geomorphically stable streams within the Ohio River watershed.

(2) Primary Constituent Element 2—Stable, undisturbed bottom substrates composed of relatively silt-free, unembedded sand and gravel.

(3) Primary Constituent Element 3—An instream flow regime (magnitude, frequency, duration, and seasonality of discharge over time) that is relatively unimpeded by impoundment or diversions such that there is minimal departure from a natural hydrograph.

(4) Primary Constituent Element 4—Adequate water quality characterized by seasonally moderated temperatures, high dissolved oxygen levels, and moderate pH, and low levels of pollutants and siltation. Adequate water quality is defined as the quality necessary for normal behavior, growth, and viability of all life stages of the diamond darter.

(5) Primary Constituent Element 5—A prey base of other fish larvae and benthic invertebrates including midge, caddisfly, and mayfly larvae.

With this proposed designation of critical habitat, we intend to identify the physical or biological features essential to the conservation of the species, through the identification of the primary constituent elements sufficient to support the life-history processes of the species.

Special Management Considerations or Protection

When designating critical habitat, we assess whether the specific areas within the geographical area occupied by the species at the time of listing contain features which are essential to the conservation of the species and which may require special management considerations or protection. The area we are proposing for designation as currently occupied critical habitat for the diamond darter is not under special management or protection provided by a legally operative management plan or agreement specific to conservation of the diamond darter and has not been designated as critical habitat for other species under the Act. This unit will require some level of management to address the current and future threats to the physical and biological features (PBFs) of the species. Various activities in or adjacent to the critical habitat unit described in this proposed rule may affect one or more of the primary constituent elements (PCEs) and may require special management considerations or protection. Some of these activities include, but are not limited to, those discussed in the ''Summary of Factors Affecting the Species,'' above. Other activities that may affect PCEs in the proposed critical habitat unit include those listed in the ''Available Conservation Measures'' section and include resource extraction (coal mining, timber harvests, natural gas and oil development activities); construction and maintenance projects; stream bottom disturbance from sewer, gas, and water lines; lack of adequate riparian buffers; and other sources of nonpoint-source pollution.

Management activities that could ameliorate these threats include, but are not limited to: use of BMPs designed to reduce sedimentation, erosion, and stream bank destruction; development of alternatives that avoid and minimize streambed disturbances; implementation of regulations that control the amount and quality of point-source discharges; and reduction of other watershed and floodplain disturbances that release sediments or other pollutants. Special management consideration or protection may be required to eliminate, or to reduce to negligible levels, the threats affecting the physical or biological features of each unit. Additional discussion of threats facing individual units is provided in the individual unit descriptions below.

Criteria Used To Identify Critical Habitat

As required by section 4(b)(2)(A) of the Act, we use the best scientific data available to designate critical habitat. We review available information pertaining to the habitat requirements of the species. In accordance with the Act and its implementing regulation at 50 CFR 424.12(e), we consider whether designating additional areas, outside those currently occupied as well as those occupied at the time of listing, are necessary to ensure the conservation of the species. We are proposing to designate as critical habitat all habitat that is currently occupied by the species; that is, the lower Elk River. This one river reach constitutes the entire current range of the species. We are also proposing to designate a specific area that is not currently occupied by the diamond darter but was historically occupied, because we have determined this area (i.e., the Green River) is essential for the conservation of the diamond darter and designating only occupied habitat is not sufficient to conserve this species.

For our evaluation of potential critical habitat, we reviewed available literature, reports, and field notes prepared by biologists, as well as historical and current survey results. We also spoke to fisheries experts and conservation professionals that are familiar with darters or the current status of aquatic systems within the current and historical range of the species.

In order to identify currently occupied habitats, we delineated known capture sites and reviewed habitat assessments and mapping efforts that have been conducted on the Elk River. Known occurrences of the diamond darter are extremely localized, and the species can be difficult to locate. Because it is reasonably likely that this rare and cryptic species is present in suitable habitats outside the immediate locations of the known captures, we considered the entire reach between the uppermost and lowermost locations as occupied habitat. We also included some areas of the mainstem Elk River that have not been specifically surveyed for diamond darters but have been determined to have suitable habitat for the species based on diamond darter species-specific habitat assessments (Osier 2005, pp. ii–50). These areas are contiguous with known capture sites, have similar habitat characteristics, have no barriers to dispersal, and are within general darter dispersal capabilities. In addition, river habitats are highly dependent upon upstream and downstream habitat conditions for their maintenance, so these contiguous areas upstream and downstream are critical to maintaining habitat conditions of known capture sites.

Areas of the Elk River downstream of the proposed unit near the confluence with the Kanawha River that do not currently provide the PCEs required to support the species, and no longer have suitable habitat characteristics because they are affected by impoundment or routine navigation dredging, were not included. The downstream reach of the Elk River to the confluence with the Kanawha River is affected by impoundment from the Winfield Lock and Dam on the Kanawha River. It is also routinely dredged for commercial navigation by the ACOE.

The portion of the Elk River upstream of the proposed unit may provide suitable habitat for the diamond darter, but we have no records of diamond darters being captured in this reach or diamond darter species-specific habitat assessments like there have been in the lower Elk River. The upper Elk River reach does contain the favorable general habitat characteristics of riffle-pool complexes with sand and gravel substrates, and there are no barriers to upstream fish movement (Service 2008, entire). However, only limited survey efforts and no diamond darter species-specific habitat assessments have been conducted that would allow us to further refine our assessment of whether this area contains any of the PCEs necessary to support the species. Additional survey efforts are being planned that may further define whether the upstream area is occupied by the diamond darter or which, if any, PCEs are present that may require special management considerations. As a result, we are not proposing to designate additional critical habitat upstream of King Shoals.

We have not included Elk River tributaries as part of the proposed designation because we have no records of the diamond darter occurring in those locations, and there have been no species-specific habitat assessments in the tributaries documenting that these areas are suitable to support the species.

We then considered whether occupied habitat was adequate for the conservation of the species. Currently occupied habitats of the diamond darter are highly localized and isolated, and are restricted to one reach of the Elk River. The range has been severely curtailed, and population size is small. Small isolated aquatic populations are subject to chance catastrophic events and to changes in human activities and land use practices that may result in their elimination. Threats to the diamond darter are imminent and are present throughout the entire range of the species. As described under Factor E, these threats are compounded by its limited distribution and isolation making the species extremely vulnerable to extinction; therefore, it is unlikely that currently occupied habitat is adequate for its conservation (Soule 1980, pp. 157–158; Noss and Cooperrider 1994, p. 61; Hunter 2002, pp. 97–101; Allendorf and Luikart 2007, pp. 117–146). Larger, more dispersed populations can reduce the threat of extinction due to habitat fragmentation and isolation (Harris 1984, pp. 93–104; Noss and Cooperrider 1994, pp. 264–297; Warren *et al.* 2000 in Grandmaison *et al.* 2003, p. 18). For these reasons, we find that conservation of the diamond darter requires expanding its range into suitable, currently unoccupied portions of its historical habitat. The inclusion of essential, unoccupied areas will provide habitat for population reintroduction and will improve the species' status through added redundancy, resiliency, and representation.

In order to identify areas of unoccupied habitat that should be designated as critical habitat, we focused on rivers that had historical records confirmed to be diamond darter through the examination of available museum specimens. For rivers that had more than one historical capture, approximate capture locations were mapped so that the minimal, previously occupied extent could be established. We then identified areas of contiguous habitat that still contained the habitat characteristics sufficient to support the life history of the species. Areas that no longer provided suitable habitat were impounded, or did not contain a series of connected riffle-pool complexes were eliminated from consideration. We then applied the following criteria to identify the unoccupied, potential critical habitat: (1) The reach supports fish species with habitat preferences similar to the diamond darter such as the shoal chub (*Macrhybopsis hyostoma*) and the streamline chub (*Erimystax dissimilis*); (2) the reach supports diverse populations of fish and mussels including other sensitive, rare, or threatened and endangered species; and (3) the reach has special management or protections in place such as being a designated wild river or exceptional use waters under State law. The reach that we identified in the Green River of Kentucky met all three criteria. These factors helped to confirm that the identified area had high-quality habitats sufficient to support the species and could be managed for the conservation of the species. No other areas were identified that met the full screening process.

We delineated the upstream and downstream boundaries of the proposed unit on the Green River based on the following information. The Green River immediately downstream of Green River Lake (River Mile 308.8 to 294.8) is excluded from the proposed critical habitat unit due to artificially variable flow, temperature, and dissolved oxygen conditions resulting from periodic discharges from Green River Dam. Fish community data collected between Greensburg and Green River Dam indicate a general trend of increasing species richness and abundance from Tebb's Bend (approximately 2.7 km [1.7 mi] below the dam) downstream to Roachville Ford (approximately 22.7 km [14.1 mi] below the dam). Also, some relatively intolerant benthic fish species present at Roachville Ford and other sites downstream within the Bioreserve are absent at Tebb's Bend, including mountain madtom (*Noturus eleutherus*), spotted darter (*Etheostoma maculatum*),

and Tippecanoe darter (*E. Tippecanoe*) (Thomas *et al.* 2004, p. 10). In contrast with Roachville Ford and other downstream sites, cobble and gravel substrates at Tebb's Bend are coated with a black substance characteristic of manganese and iron, which precipitates out and is deposited on the stream bed following hypolimnetic discharge from reservoirs (Thomas 2012, p. 1). Because fish community structure and habitat conditions at Roachville Ford are more similar to other locations in the Green River Bioreserve, this location (River Mile 294.8) represents the upstream limit of the proposed critical habitat section, which continues downstream to Cave Island (River Mile 200.3) within Mammoth Cave National Park.

Downstream of Cave Island, the Green River becomes affected by impoundment from the ACOE Lock and Dam #6. The lock and dam was constructed in 1906 and was disabled in 1950. Although the lock has been disabled and is becoming unstable, the dam still partially impedes water flow resulting in a system with slower, warmer water and a loss of riffle and shoal habitat types (Grubbs and Taylor 2004, p. 26; Olson 2006, pp. 295–297). The delineation between the portions of the river affected by Lock and Dam #6 and those that retain free-flowing characteristics occurs distinctly at Cave Island (Grubbs and Taylor 2004, pp. 19–26). There is a marked decrease in benthic macroinvertebrates that are intolerant of siltation below this point, which is attributable to slower current velocities and a lack of shallow riffles and associated course sediments (Grubbs and Taylor 2004, p. 26). For these reasons, Cave Island was selected as the downstream limit of the critical habitat designation in this unit.

Once we determined that the areas of Elk and Green Rivers met our criteria, we then used ArcGIS software and the National Hydrography Dataset (NHD) to delineate the specific river reach being proposed for diamond darter critical habitat. Areas proposed for diamond darter critical habitat include only Elk and Green River mainstem stream channels within the ordinary high-water line. We have not included Elk or Green River tributaries as part of the proposed designation because we have no records of the diamond darter occurring in those locations. We set the upstream and downstream limits of each critical habitat unit by identifying landmarks (islands, confluences, roadways, crossings, dams) that clearly delineated each river reach. Stream confluences are often used to delineate the boundaries of a unit for an aquatic species because the confluence of a tributary typically marks a significant change in the size or habitat characteristics of the stream. Stream confluences are logical and recognizable termini. When a named tributary was not available, or if another landmark provided a more recognizable boundary, another landmark was used. In the unit descriptions, distances between the upstream or downstream extent of a stream segment are given in kilometers (km) rounded to one decimal point and equivalent miles (mi). Distances for the Elk River were measured by tracing the course of the stream as depicted by the NHD. Distances for the Green River were measured using river miles as designated by the Kentucky Division of Water which were generated using the NHD.

When determining proposed critical habitat boundaries, we made every effort to avoid including developed areas such as lands covered by buildings, pavement, and other structures because such lands lack physical or biological features essential for the conservation of diamond darter. The scale of the maps we prepared under the parameters for publication within the Code of Federal Regulations may not reflect the exclusion of such developed lands. Any such lands inadvertently left inside critical habitat boundaries shown on the maps of this proposed rule have been excluded by text in the proposed rule and are not proposed for designation as critical habitat. Therefore, if the critical habitat is finalized as proposed, a Federal action involving these lands would not trigger section 7 consultation with respect to critical habitat and the requirement of no adverse modification, unless the specific action would affect the physical or biological features in the adjacent critical habitat. The designation of critical habitat does not imply that lands or streams outside of critical habitat do not play an important role in the conservation of the diamond darter.

We are proposing for designation of critical habitat lands and waters that we have determined are occupied at the time of listing and contain sufficient elements of physical or biological features to support life-history processes essential tor the conservation of the species and that may require special management considerations. This area of the Elk River in West Virginia is identified as Unit 1. We are also proposing to designate lands and waters outside of the geographical area occupied at the time of listing that we have determined are essential for the conservation of the diamond darter. This area of the Green River in Kentucky is identified as Unit 2. The two proposed units contain sufficient (more than one, but not all) elements of physical and biological features (PBFs) present to support diamond darter life-history processes, but may require special management considerations or protection to achieve the presence of all the identified PBFs.

The critical habitat designation is defined by the map or maps, as modified by any accompanying regulatory text, presented at the end of this document in the rule portion. We include more detailed information on the boundaries of the critical habitat designation in the preamble of this document. We will make the coordinates or plot points or both on which each map is based available to the public on *http://www.regulations.gov* at Docket No. FWS–R5–ES–2012–0045, on our Internet site at *http://www.fws.gov/westvirginiafieldoffice/index.html*, and at the field office responsible for the designation (see **FOR FURTHER INFORMATION CONTACT** above).

Proposed Critical Habitat Designation

We are proposing two units as critical habitat for the diamond darter. The critical habitat areas we describe below constitute our current best assessment of areas that meet the definition of critical habitat for the diamond darter. The areas we propose as critical habitat are: (1) The lower Elk River; and (2) the Green River. Table 2 shows the occupancy of the units and ownership of the proposed designated areas for the diamond darter.

TABLE 2—OCCUPANCY AND OWNERSHIP OF PROPOSED DIAMOND DARTER CRITICAL HABITAT UNITS

Unit	Location	Occupied?	Federal, State, or other public ownership km (mi)	Private ownership km (mi)	Total length km (mi)
1	Lower Elk River	yes	45.0 * (28.0)	none	45.0 (28.0)
2	Green River	no	16.3 (10.1)	135.8 (84.4)	152.1 (94.5)

TABLE 2—OCCUPANCY AND OWNERSHIP OF PROPOSED DIAMOND DARTER CRITICAL HABITAT UNITS—Continued

Unit	Location	Occupied?	Federal, State, or other public ownership km (mi)	Private ownership km (mi)	Total length km (mi)
Total **					197.1 (122.5)

* As described below, this includes a combination of State ownership and easements. The State considers the easement area under their jurisdiction. This is the best information available to us for calculating river mile ownership in the Elk River. Therefore, we have included this habitat under public ownership.

** Totals may not sum due to rounding.

We present brief descriptions of each unit and reasons why each unit meets the definition of critical habitat below. The critical habitat units include the stream channels of the rivers within the ordinary high-water line. As defined in 33 CFR 329.11, the ordinary high-water line on nontidal rivers is the line on the shore established by the fluctuations of water and indicated by physical characteristics such as a clear, natural water line impressed on the bank; changes in the character of soil; destruction of terrestrial vegetation; the presence of litter and debris; or other appropriate means that consider the characteristics of the surrounding areas. In West Virginia, the State owns the bed and banks of streams between the ordinary low-water marks, and is vested with a public easement between the ordinary low-water and high-water marks (George 1998, p. 461). The water is also under State jurisdiction (WVSC § 22–26–3). In Kentucky, landowners own the land under streams (*e.g.,* the stream channel or bottom) in the designated unit, but the water is under State jurisdiction.

Unit 1: Lower Elk River, Kanawha and Clay Counties, West Virginia

Unit 1 represents the habitat supporting the only remaining occupied diamond darter population. This population could provide a source to repopulate other areas within the diamond darter's historical range. Unit 1 includes 45.0 km (28.0 mi) of the Elk River from the confluence with King Shoals Run near Wallback Wildlife Management Area downstream to the confluence with an unnamed tributary entering the Elk River on the right descending bank adjacent to Knollwood Drive in Charleston, West Virginia. As described above, all of the habitat within this unit is under public control or ownership (see Table 1 above). The State of West Virginia owns or has a public easement on the streambed and banks of the Elk River up to the ordinary high-water mark (George 1998, p. 461). The water is also publically owned. The majority of lands adjacent to this unit are privately owned. There are two areas of public land within the watershed: The 3,996-ha (9,874-ac) Morris Creek Wildlife Management Area, which is leased and managed by the WVDNR (2007, p. 9), and Coonskin Park, an approximately 405-ha (1,000-ac) park owned by Kanawha County (Kanawha County Parks and Recreation 2008, p. 1).

Live diamond darters have been documented at four sites within this unit, including at sites near Clendenin, Mink Shoals, Reamer Hill, and between Broad Run and Burke Branch. This unit contains space for individual and population growth and for normal behavior; food, water, air, light, minerals, or other nutritional or physiological requirements; cover or shelter; and sites for breeding, reproduction, or rearing (or development) of offspring, and is essential to the conservation of the species. Diamond darter habitat assessments have documented that this reach of the Elk River contains 28 riffle-pool transition areas with moderate currents and sand and gravel substrates that are suitable for the diamond darter (PCEs 1 and 2) (Osier 2005, p. 34). There is connectivity between these habitats to provide access to various spawning, foraging, and resting sites and promote gene flow (PCE 1). This reach of the Elk River also has a natural flow regime that is relatively unimpeded by impoundment (PCE 3), and has healthy benthic macroinvertebrate populations (PCE 5) (WVDEP 1997, pp. 20–89). However, water quality within this unit is impaired due to high levels of fecal coliform bacteria and iron (PCE 4) (WVDEP 2010, p. 16).

Within this unit, the diamond darter and its habitat may require special management considerations or protection to address threats from resource extraction (coal mining, timber harvests, natural gas and oil development activities); impoundment; water diversion or withdrawals; construction and maintenance projects; stream bottom disturbance from sewer, gas, and water line crossings; lack of adequate riparian buffers; sewage discharges, and nonpoint-source pollution. Special management to address water quality degradation is particularly important since prolonged water quality impairments can also affect the availability of relatively silt-free sand and gravel substrates (PCE 2) and healthy populations of fish larvae and benthic invertebrates that provide a prey base for the diamond darter (PCE 5).

Unit 2: Green River, Edmonson, Hart, and Green Counties, Kentucky

Unit 2 represents the best remaining historically occupied habitat for future diamond darter reintroductions that will improve the species' redundancy, resiliency, and representation essential for its conservation. Unit 2 includes 152.1 km (94.5 mi) of the Green River from Roachville Ford near Greensburg (River Mile 294.8) downstream to the end of Cave Island in Mammoth Cave National Park (NP) (River Mile 200.3). Approximately 16.3 km (10.1 mi) of this unit is publically owned (see Table 1 above) and is contained within the 20,750-ha (51,274.1-ac) Mammoth Cave NP. The remainder of the unit, 135.8 km (84.4 mi), is privately owned. With the exception of the lands owned by Mammoth Cave NP, the lands within the Green River watershed are also privately owned. Through the U.S. Department of Agriculture's (USDA) Conservation Reserve Program (CRP) and other conservation programs, the Nature Conservancy owns or has easements on approximately 794.4 ha (1,962.9 ac) within the watershed, either adjacent to or in close proximity to the river. In addition, Western Kentucky University owns or manages 1,300 ac (526.1 ha) along the Green River in Hart County as part of the Upper Green River Biological Preserve (Western Kentucky University 2012, p. 1). In Kentucky, landowners own the land under streams (e.g., the stream channel or bottom) in the designated units, but the water is under State jurisdiction.

This unit is within the historical range of the species, but is not currently considered occupied. Between 1890 and 1929, diamond darters were recorded from three locations within this unit: Adjacent to Cave Island in Edmonson

County, and near Price Hole and Greensburg, in Green County.

The Green River is a seventh-order warmwater stream with a total drainage area of 23,879.7 km² (9,220 mi²). The largely free-flowing 160.3-km (100-mile) section of the Green River from the Green River Dam downstream to its confluence with the Nolin River in Mammoth Cave NP is among the most significant aquatic systems in the United States in terms of aquatic species diversity and endemism and supports over 150 species of fish and 70 species of freshwater mussels, including 7 federally endangered mussel species, but no designated critical habitat (Thomas *et al.* 2004, p. 5; USDA 2006, p.16). Populations of fish species that have similar habitat preferences as the diamond darter, such as the shoal chub and streamline chub are present throughout this reach (Thomas 2012, p. 1).

The entire reach of the Green River within this unit is designated by Kentucky as both Outstanding State Resource Waters and Exceptional Waters. Outstanding State Resource Waters are those surface waters designated by the Energy and Environment Cabinet as containing federally threatened and endangered species. Exceptional Waters are waterbodies whose quality exceeds that necessary to support propagation of fish, shellfish, wildlife, and recreation. These waters support excellent fish and macroinvertebrate communities (KYEEC 2012, p. 1). The entire reach of the river within Mammoth Cave NP, including the 16.3 km (10.1 mi) that are proposed as critical habitat, is also designated as a Kentucky Wild River. These rivers have exceptional quality and aesthetic character and are designated by the State General Assembly in recognition of their unspoiled character, outstanding water quality, and natural characteristics (KYEEC 2012, p. 1). Each Wild River is actually a linear corridor encompassing all visible land on each side of the river up to a distance of 609.6 m (2,000 ft). In order to protect their features and quality, land-use changes are regulated by a permit system, and certain highly destructive land-use changes, such as strip mining and clear-cutting, are prohibited within corridor boundaries (KYEEC 2012, p.1).

As described in the *Criteria Used to Identify Critical Habitat* section above, the inclusion of unoccupied areas is essential for the conservation of the diamond darter because it will provide currently suitable habitat for a population reintroduction that will allow expansion of diamond darter populations into historically occupied habitat adding to the species' redundancy, resiliency, and representation. In addition, this reach of the Green River is a moderate-to-large warmwater stream with a series of connected riffle-pool complexes that is unaffected by impoundment (PCEs 1 and 3). The reach has good water quality and supports fish species that have similar habitat requirements including clean sand and gravel substrates, low levels of siltation, and healthy benthic macroinvertebrate populations for prey items (PCEs 2, 3, and 4).

The reach of the Green River being proposed as critical habitat is the focus of many ongoing conservation efforts. The Nature Conservancy has designated this area as the Green River Bioreserve (Thomas *et al.* 2004, p. 5) and the Kentucky Department of Fish and Wildlife Resources identified this portion of the Green River as a Priority Conservation Area in their Comprehensive Wildlife Conservation Strategy (USDA 2006, p. 35). Since 2001, more than 40,568.6 ha (100,000 ac) within the watershed have been enrolled in CRP (USDA 2010, p. 3). The goal of this program is to work with private landowners to greatly reduce sediments, nutrients, pesticides, and pathogens from agricultural sources that could have an adverse effect on the health of the Green River system (USDA 2006, p. 16). These organizations along with the Service, Western Kentucky University, Kentucky State University, the ACOE, private landowners, and other partners are also working towards conserving natural resources in this watershed by restoring riparian buffers, constructing fences to keep livestock out of the river, managing dam operations at the Green River Reservoir to more closely mimic natural discharges, and conducting long-term ecological research on fish and invertebrates (Hensley 2012, p. 1; TNC 2012, p. 1; WKU 2012, p.1). The feasibility of removing Lock and Dam #6 has also been evaluated, but no decision on this proposal has been made yet (Olson 2006, pp. 295–297).

Land use within this watershed is primarily agricultural or forested. There is also some oil and gas development within the watershed. Management may be needed to address resource extraction (timber harvests, natural gas and oil development activities); water discharges or withdrawals; construction and maintenance projects; stream bottom disturbance from sewer, gas, and water line crossings; lack of adequate riparian buffers; sedimentation, sewage discharges, and nonpoint-source pollution.

Effects of Critical Habitat Designation

Section 7 Consultation

Section 7(a)(2) of the Act requires Federal agencies, including the Service, to ensure that any action they fund, authorize, or carry out is not likely to jeopardize the continued existence of any endangered species or threatened species or result in the destruction or adverse modification of designated critical habitat of such species. In addition, section 7(a)(4) of the Act requires Federal agencies to confer with the Service on any agency action that is likely to jeopardize the continued existence of any species proposed to be listed under the Act or result in the destruction or adverse modification of proposed critical habitat.

Decisions by the 5th and 9th Circuit Courts of Appeals have invalidated our regulatory definition of ''destruction or adverse modification'' (50 CFR 402.02) (see *Gifford Pinchot Task Force* v. *U.S. Fish and Wildlife Service,* 378 F. 3d 1059 (9th Cir. 2004) and *Sierra Club* v. *U.S. Fish and Wildlife Service et al.,* 245 F.3d 434, 442 (5th Cir. 2001)), and we do not rely on this regulatory definition when analyzing whether an action is likely to destroy or adversely modify critical habitat. Under the statutory provisions of the Act, we determine destruction or adverse modification on the basis of whether, with implementation of the proposed Federal action, the affected critical habitat would continue to serve its intended conservation role for the species.

If a Federal action may affect a listed species or its critical habitat, the responsible Federal agency (action agency) must enter into consultation with us. Examples of actions that are subject to the section 7 consultation process are actions on state, tribal, local, or private lands that require a Federal permit (such as a permit from the ACOE under section 404 of the Clean Water Act (33 U.S.C. 1251 *et seq.*) or a permit from the Service under section 10 of the Endangered Species Act) or that involve some other Federal action (such as funding from the Federal Highway Administration, Federal Aviation Administration, or Federal Emergency Management Agency). Federal actions not affecting listed species or critical habitat and actions on state, tribal, local, or private lands that are not federally funded or authorized do not require section 7 consultation.

As a result of section 7 consultation, we document compliance with the requirements of section 7(a)(2) through our issuance of:

(1) A concurrence letter for Federal actions that may affect, but are not

likely to adversely affect, listed species or critical habitat; or

(2) A biological opinion for Federal actions that may affect and are likely to adversely affect, listed species or critical habitat.

When we issue a biological opinion concluding that a project is likely to jeopardize the continued existence of a listed species and/or destroy or adversely modify critical habitat, we provide reasonable and prudent alternatives to the project, if any are identifiable, that would avoid the likelihood of jeopardy and/or destruction or adverse modification of critical habitat. We define ''reasonable and prudent alternatives'' (at 50 CFR 402.02) as alternative actions identified during consultation that:

(1) Can be implemented in a manner consistent with the intended purpose of the action;

(2) Can be implemented consistent with the scope of the Federal agency's legal authority and jurisdiction;

(3) Are economically and technologically feasible; and

(4) Would, in the Director's opinion, avoid the likelihood of jeopardizing the continued existence of the listed species and/or avoid the likelihood of destroying or adversely modifying critical habitat.

Reasonable and prudent alternatives can vary from slight project modifications to extensive redesign or relocation of the project. Costs associated with implementing a reasonable and prudent alternative are similarly variable.

Regulations at 50 CFR 402.16 require Federal agencies to reinitiate consultation on previously reviewed actions in instances where we have listed a new species or subsequently designated critical habitat that may be affected and the Federal agency has retained discretionary involvement or control over the action (or the agency's discretionary involvement or control is authorized by law). Consequently, Federal agencies sometimes may need to request reinitiation of consultation with us on actions for which formal consultation has been completed, if those actions with discretionary involvement or control may affect subsequently listed species or designated critical habitat.

Application of the ''Adverse Modification'' Standard

The key factor related to the adverse modification determination is whether, with implementation of the proposed Federal action, the affected critical habitat would continue to serve its intended conservation role for the species. Activities that may destroy or adversely modify critical habitat are those that alter the physical or biological features to an extent that appreciably reduces the conservation value of critical habitat for the diamond darter. As discussed above, the role of critical habitat is to support life-history needs of the species and provide for the conservation of the species.

Section 4(b)(8) of the Act requires us to briefly evaluate and describe, in any proposed or final regulation that designates critical habitat, activities involving a Federal action that may destroy or adversely modify such habitat, or that may be affected by such designation.

Activities that may affect critical habitat, when carried out, funded, or authorized by a Federal agency, should result in consultation for the diamond darter. These activities include, but are not limited to:

(1) Actions that would alter the geomorphology of stream habitats. Such activities could include, but are not limited to, instream excavation or dredging, impoundment, channelization, removal of riparian vegetation, road and bridge construction, discharge of mine waste or spoil, and other discharges of fill materials. These activities could cause aggradation or degradation of the channel bed elevation or significant bank erosion, result in entrainment or burial of these fishes, and cause other direct or cumulative adverse effects to the species.

(2) Actions that would significantly alter the existing flow regime or water quantity. Such activities could include, but are not limited to, impoundment, water diversion, water withdrawal, and hydropower generation. These activities could eliminate or reduce the habitat necessary for growth and reproduction of the diamond darter.

(3) Actions that would significantly alter water chemistry or water quality (for example, dissolved oxygen, temperature, pH, contaminants, and excess nutrients). Such activities could include, but are not limited to, hydropower discharges or the release of chemicals, biological pollutants, or toxic effluents into surface water or connected groundwater at a point source or by dispersed release (nonpoint source). These activities could alter water conditions beyond the tolerances of these fish and result in direct or cumulative adverse effects to the species.

(4) Actions that would significantly alter stream bed material composition and quality by increasing sediment deposition or embeddedness. Such activities could include, but are not limited to, certain construction projects, oil and gas development, mining, timber harvest, and other watershed and floodplain disturbances if they release sediments or nutrients into the water. These activities could eliminate or reduce habitats necessary for the growth and reproduction of these fish by causing excessive sedimentation or nutrification.

Exemptions

Application of Section 4(a)(3) of the Act

The Sikes Act Improvement Act of 1997 (Sikes Act) (16 U.S.C. 670a) required each military installation that includes land and water suitable for the conservation and management of natural resources to complete an integrated natural resources management plan (INRMP) by November 17, 2001. An INRMP integrates implementation of the military mission of the installation with stewardship of the natural resources found on the base. Each INRMP includes:

(1) An assessment of the ecological needs on the installation, including the need to provide for the conservation of listed species;

(2) A statement of goals and priorities;

(3) A detailed description of management actions to be implemented to provide for these ecological needs; and

(4) A monitoring and adaptive management plan.

Among other things, each INRMP must, to the extent appropriate and applicable, provide for fish and wildlife management; fish and wildlife habitat enhancement or modification; wetland protection, enhancement, and restoration where necessary to support fish and wildlife; and enforcement of applicable natural resource laws.

The National Defense Authorization Act for Fiscal Year 2004 (Pub. L. 108–136) amended the Act to limit areas eligible for designation as critical habitat. Specifically, section 4(a)(3)(B)(i) of the Act (16 U.S.C. 1533(a)(3)(B)(i)) now provides: ''The Secretary [of the Interior (Secretary)] shall not designate as critical habitat any lands or other geographical areas owned or controlled by the Department of Defense, or designated for its use, that are subject to an integrated natural resources management plan prepared under section 101 of the Sikes Act (16 U.S.C. 670a), if the Secretary determines in writing that such plan provides a benefit to the species for which critical habitat is proposed for designation.''

There are no Department of Defense (DOD) lands with a completed INRMP

within the proposed critical habitat designation.

Exclusions

Application of Section 4(b)(2) of the Act

Section 4(b)(2) of the Act states that the Secretary shall designate and make revisions to critical habitat on the basis of the best available scientific data after taking into consideration the economic impact, national security impact, and any other relevant impact of specifying any particular area as critical habitat. The Secretary may exclude an area from critical habitat if he determines that the benefits of such exclusion outweigh the benefits of specifying such area as part of the critical habitat, unless he determines, based on the best scientific data available, that the failure to designate such area as critical habitat will result in the extinction of the species. In making that determination, the statute on its face, as well as the legislative history, are clear that the Secretary has broad discretion regarding which factor(s) to use and how much weight to give to any factor.

Under section 4(b)(2) of the Act, we may exclude an area from designated critical habitat based on economic impacts, impacts on national security, or any other relevant impacts. In considering whether to exclude a particular area from the designation, we identify the benefits of including the area in the designation, identify the benefits of excluding the area from the designation, and evaluate whether the benefits of exclusion outweigh the benefits of inclusion. If the analysis indicates that the benefits of exclusion outweigh the benefits of inclusion, the Secretary may exercise his discretion to exclude the area only if such exclusion would not result in the extinction of the species.

Exclusions Based on Economic Impacts

Under section 4(b)(2) of the Act, we consider the economic impacts of specifying any particular area as critical habitat. In order to consider economic impacts, we are preparing an analysis of the economic impacts of the proposed critical habitat designation and related factors.

We will announce the availability of the draft economic analysis as soon as it is completed, at which time we will seek public review and comment. At that time, copies of the draft economic analysis will be available for downloading from the Internet at *http://www.regulations.gov,* or by contacting the West Virginia Ecological Services Field Office directly (see **FOR FURTHER INFORMATION CONTACT** section). During the development of a final designation, we will consider economic impacts, public comments, and other new information, and areas may be excluded from the final critical habitat designation under section 4(b)(2) of the Act and our implementing regulations at 50 CFR 424.19.

Exclusion Based on National Security Impacts

Under section 4(b)(2) of the Act, we consider whether there are lands owned or managed by the DOD where a national security impact might exist. In preparing this proposal, we have determined that the lands within the proposed designation of critical habitat for the diamond darter are not owned or managed by the DOD, and therefore, we anticipate no impact to national security.

Exclusions Based on Other Relevant Impacts

Under section 4(b)(2) of the Act, we consider any other relevant impacts, in addition to economic impacts and impacts on national security. We consider a number of factors including whether landowners have developed any conservation plans or other management plans for the area, or whether there are conservation partnerships that would be encouraged by designation of, or exclusion of lands from, critical habitat. In addition, we look at any tribal issues, and consider the government-to-government relationship of the United States with tribal entities. We also consider any social impacts that might occur because of the designation.

In preparing this proposed rule, we have determined that there are currently no conservation plans or other management plans for the species, and the proposed designation does not include any tribal lands or trust resources. We anticipate no impact to tribal lands, partnerships, or management plans from this proposed critical habitat designation.

Notwithstanding these decisions, as stated under ''Public Comments'' above, we are seeking specific comments on whether any areas we are proposing for designation should be excluded under section 4(b)(2) of the Act.

Peer Review

In accordance with our joint policy on peer review published in the **Federal Register** on July 1, 1994 (59 FR 34270), we will seek the expert opinions of at least three appropriate and independent specialists regarding this proposed rule. The purpose of peer review is to ensure that our critical habitat designation is based on scientifically sound data, assumptions, and analyses. We will invite these peer reviewers to comment during this public comment period on our specific assumptions and conclusions in this proposed designation of critical habitat.

We will consider all comments and information received during this comment period on this proposed rule during our preparation of a final determination. Accordingly, the final decision may differ from this proposal.

Public Hearings

Section 4(b)(5) of the Act provides for one or more public hearings on this proposal, if requested. Requests must be received within 45 days after the date of publication of this proposed rule in the **Federal Register**. Such requests must be sent to the West Virginia Ecological Services Field Office (see **FOR FURTHER INFORMATION CONTACT**). We will schedule public hearings on this proposal, if any are requested, and announce the dates, times, and places of those hearings, as well as how to obtain reasonable accommodations, in the **Federal Register** and local newspapers at least 15 days before the hearing.

Required Determinations

Regulatory Planning and Review—Executive Orders 12866 and 13563

Executive Order 12866 provides that the Office of Information and Regulatory Affairs (OIRA) in the Office of Management and Budget will review all significant rules. The Office of Information and Regulatory Affairs has determined that this rule is not significant.

Executive Order 13563 reaffirms the principles of E.O. 12866 while calling for improvements in the nation's regulatory system to promote predictability, to reduce uncertainty, and to use the best, most innovative, and least burdensome tools for achieving regulatory ends. The executive order directs agencies to consider regulatory approaches that reduce burdens and maintain flexibility and freedom of choice for the public where these approaches are relevant, feasible, and consistent with regulatory objectives. E.O. 13563 emphasizes further that regulations must be based on the best available science and that the rulemaking process must allow for public participation and an open exchange of ideas. We have developed this rule in a manner consistent with these requirements.

Regulatory Flexibility Act (5 U.S.C. 601 et seq.)

Under the Regulatory Flexibility Act (RFA; 5 U.S.C. 601 *et seq.*) as amended by the Small Business Regulatory Enforcement Fairness Act of 1996 (SBREFA; 5 U.S.C. 801 *et seq.*), whenever an agency is required to publish a notice of rulemaking for any proposed or final rule, it must prepare and make available for public comment a regulatory flexibility analysis that describes the effects of the rule on small entities (small businesses, small organizations, and small government jurisdictions). However, no regulatory flexibility analysis is required if the head of the agency certifies the rule will not have a significant economic impact on a substantial number of small entities. The SBREFA amended the RFA to require Federal agencies to provide a certification statement of the factual basis for certifying that the rule will not have a significant economic impact on a substantial number of small entities.

According to the Small Business Administration, small entities include small organizations such as independent nonprofit organizations; small governmental jurisdictions, including school boards and city and town governments that serve fewer than 50,000 residents; and small businesses (13 CFR 121.201). Small businesses include such businesses as manufacturing and mining concerns with fewer than 500 employees, wholesale trade entities with fewer than 100 employees, retail and service businesses with less than $5 million in annual sales, general and heavy construction businesses with less than $27.5 million in annual business, special trade contractors doing less than $11.5 million in annual business, and forestry and logging operations with fewer than 500 employees and annual business less than $7 million. To determine whether small entities may be affected, we will consider the types of activities that might trigger regulatory impacts under this designation as well as types of project modifications that may result. In general, the term ''significant economic impact'' is meant to apply to a typical small business firm's business operations.

Importantly, the incremental impacts of a rule must be both significant and substantial to prevent certification of the rule under the RFA and to require the preparation of an initial regulatory flexibility analysis. If a substantial number of small entities are affected by the proposed critical habitat designation, but the per-entity economic impact is not significant, the Service may certify. Likewise, if the per-entity economic impact is likely to be significant, but the number of affected entities is not substantial, the Service may also certify.

Under the RFA, as amended, and following recent court decisions, Federal agencies are only required to evaluate the potential incremental impacts of rulemaking on those entities directly regulated by the rulemaking itself, and not the potential impacts to indirectly affected entities. The regulatory mechanism through which critical habitat protections are realized is section 7 of the Act, which requires Federal agencies, in consultation with the Service, to ensure that any action authorized, funded, or carried by the Agency is not likely to adversely modify critical habitat. Therefore, only Federal action agencies are directly subject to the specific regulatory requirement (avoiding destruction and adverse modification) imposed by critical habitat designation. Under these circumstances, it is our position that only Federal action agencies will be directly regulated by this designation. Therefore, because Federal agencies are not small entities, the Service may certify that the proposed critical habitat rule will not have a significant economic impact on a substantial number of small entities.

We acknowledge, however, that in some cases, third-party proponents of the action subject to permitting or funding may participate in a section 7 consultation, and thus may be indirectly affected. We believe it is good policy to assess these impacts if we have sufficient data before us to complete the necessary analysis, whether or not this analysis is strictly required by the RFA. While this regulation does not directly regulate these entities, in our draft economic analysis we will conduct a brief evaluation of the potential number of third parties participating in consultations on an annual basis in order to ensure a more complete examination of the incremental effects of this proposed rule in the context of the RFA.

In conclusion, we believe that, based on our interpretation of directly regulated entities under the RFA and relevant case law, this designation of critical habitat will only directly regulate Federal agencies, which are not by definition small business entities. And as such, we certify that, if promulgated, this designation of critical habitat would not have a significant economic impact on a substantial number of small business entities. Therefore, an initial regulatory flexibility analysis is not required. However, though not necessarily required by the RFA, in our draft economic analysis for this proposal, we will consider and evaluate the potential effects to third parties that may be involved with consultations with Federal action agencies related to this action.

Energy Supply, Distribution, or Use—Executive Order 13211

Executive Order 13211 (Actions Concerning Regulations That Significantly Affect Energy Supply, Distribution, or Use) requires agencies to prepare Statements of Energy Effects when undertaking certain actions. We do not expect the designation of this proposed critical habitat to significantly affect energy supplies, distribution, or use.

Natural gas and oil exploration and development activities occur or could potentially occur in both of the proposed critical habitat units for the diamond darter. Both of the proposed units already support other federally endangered species, and the Service is already actively engaged in discussions with many gas companies to develop measures to avoid impacts to these habitats. Oil and gas exploration and development within the Green River unit is expected to be limited. There are at least six existing gas pipelines crossing the Elk River within the proposed unit, and others may be proposed in the future. Development and compliance with voluntary BMPs and avoidance measures such as the use of directional drilling or rerouting proposed transmission lines would be expected to minimize impacts of natural gas and oil exploration and development in the areas of proposed critical habitat. These types of measures are already being implemented by some oil and gas companies or other industries in the proposed units or in other areas.

Coal mining occurs or could potentially occur in the Elk River proposed critical habitat unit for the diamond darter. Incidental take for listed species associated with surface coal mining activities is currently covered under a programmatic, nonjeopardy biological opinion between the Office of Surface Mining and the Service completed in 1996 (Service 1996, entire). The biological opinion covers existing, proposed, and future endangered and threatened species that may be affected by the implementation and administration of surface coal mining programs under the Surface Mining Control and Reclamation Act of 1977. Through its analysis, the Service concluded that the proposed action

(surface coal mining and reclamation activities) was not likely to jeopardize the continued existence of any threatened, endangered, or proposed species or result in adverse modification of designated or proposed critical habitat.

Therefore, we do not believe this action is a significant energy action, and no Statement of Energy Effects is required. However, we will further evaluate this issue as we conduct our economic analysis, and review and revise this assessment as warranted.

Unfunded Mandates Reform Act (2 U.S.C. 1501 et seq.)

In accordance with the Unfunded Mandates Reform Act (2 U.S.C. 1501 *et seq.*), we make the following findings:

(1) This rule will not produce a Federal mandate. In general, a Federal mandate is a provision in legislation, statute, or regulation that would impose an enforceable duty upon state, local, or tribal governments, or the private sector, and includes both ''Federal intergovernmental mandates'' and ''Federal private sector mandates.'' These terms are defined in 2 U.S.C. 658(5)–(7). ''Federal intergovernmental mandate'' includes a regulation that ''would impose an enforceable duty upon state, local, or tribal governments'' with two exceptions. It excludes ''a condition of Federal assistance.'' It also excludes ''a duty arising from participation in a voluntary Federal program,'' unless the regulation ''relates to a then-existing Federal program under which $500,000,000 or more is provided annually to state, local, and tribal governments under entitlement authority,'' if the provision would ''increase the stringency of conditions of assistance'' or ''place caps upon, or otherwise decrease, the Federal Government's responsibility to provide funding,'' and the state, local, or tribal governments ''lack authority'' to adjust accordingly. At the time of enactment, these entitlement programs were: Medicaid; Aid to Families with Dependent Children work programs; Child Nutrition; Food Stamps; Social Services Block Grants; Vocational Rehabilitation State Grants; Foster Care, Adoption Assistance, and Independent Living; Family Support Welfare Services; and Child Support Enforcement. ''Federal private sector mandate'' includes a regulation that ''would impose an enforceable duty upon the private sector, except (i) a condition of Federal assistance or (ii) a duty arising from participation in a voluntary Federal program.''

The designation of critical habitat does not impose a legally binding duty on non-Federal Government entities or private parties. Under the Act, the only regulatory effect is that Federal agencies must ensure that their actions do not destroy or adversely modify critical habitat under section 7. While non-Federal entities that receive Federal funding, assistance, or permits, or that otherwise require approval or authorization from a Federal agency for an action, may be indirectly impacted by the designation of critical habitat, the legally binding duty to avoid destruction or adverse modification of critical habitat rests squarely on the Federal agency. Furthermore, to the extent that non-Federal entities are indirectly impacted because they receive Federal assistance or participate in a voluntary Federal aid program, the Unfunded Mandates Reform Act would not apply, nor would critical habitat shift the costs of the large entitlement programs listed above onto state governments.

(2) We do not believe that this rule will significantly or uniquely affect small governments. The diamond darter only occurs in navigable waters within West Virginia in which the river bottom is owned by the State of West Virginia. The adjacent upland properties are owned by private entities. Within Kentucky, the lands being proposed for critical habitat are mostly owned by private landowners; a small portion is owned by Mammoth Cave National Park. None of these government entities fit the definition of ''small governmental jurisdiction.'' Small governments will be affected only to the extent that any programs having Federal funds, permits, or other authorized activities must ensure that their actions will not adversely affect the critical habitat. As such, a Small Government Agency Plan is not required. We will, however, further evaluate this issue as we conduct our economic analysis and revise this assessment if appropriate.

Takings—Executive Order 12630

In accordance with Executive Order 12630 (Government Actions and Interference with Constitutionally Protected Private Property Rights), we have analyzed the potential takings implications of designating critical habitat for the diamond darter in a takings implications assessment. Critical habitat designation does not affect landowner actions that do not require Federal funding or permits, nor does it preclude development of habitat conservation programs or issuance of incidental take permits to permit actions that do not require Federal funding or permits to go forward. The takings implications assessment concludes that this designation of critical habitat for the diamond darter does not pose significant takings implications for lands within or affected by the designation.

Federalism—Executive Order 13132

In accordance with Executive Order 13132 (Federalism), the rule does not have significant Federalism effects. A Federalism assessment is not required. In keeping with Department of the Interior and Department of Commerce policy, we requested information from, and coordinated development of this proposed critical habitat designation with, appropriate State resource agencies in West Virginia and Kentucky. The designation of critical habitat in areas currently occupied by this fish may impose nominal additional regulatory restrictions to those currently in place for other listed species and, therefore, may have little incremental impact on state and local governments and their activities. The designation may have some benefit to these governments because the areas that contain the physical or biological features essential to the conservation of the species are more clearly defined, and the elements of the features of the habitat necessary to the conservation of the species are specifically identified. This information does not alter where and what federally sponsored activities may occur. However, it may assist local governments in long-range planning (rather than having them wait for case-by-case section 7 consultations to occur).

Where state and local governments require approval or authorization from a Federal agency for actions that may affect critical habitat, consultation under section 7(a)(2) would be required. While non-Federal entities that receive Federal funding, assistance, or permits, or that otherwise require approval or authorization from a Federal agency for an action, may be indirectly impacted by the designation of critical habitat, the legally binding duty to avoid destruction or adverse modification of critical habitat rests squarely on the Federal agency.

Civil Justice Reform—Executive Order 12988

In accordance with Executive Order (Order) 12988 (Civil Justice Reform), the Office of the Solicitor has determined that the rule does not unduly burden the judicial system and that it meets the requirements of sections 3(a) and 3(b)(2) of the Order. We have proposed designating critical habitat in accordance with the provisions of the Act. This proposed rule uses standard

property descriptions and identifies the elements of physical or biological features essential to the conservation of the diamond darter within the designated areas to assist the public in understanding the habitat needs of the species.

Paperwork Reduction Act of 1995 (44 U.S.C. 3501 et seq.)

This rule does not contain any new collections of information that require approval by OMB under the Paperwork Reduction Act of 1995 (44 U.S.C. 3501 *et seq.*). This rule will not impose recordkeeping or reporting requirements on state or local governments, individuals, businesses, or organizations. An agency may not conduct or sponsor, and a person is not required to respond to, a collection of information unless it displays a currently valid OMB control number.

National Environmental Policy Act (42 U.S.C. 4321 et seq.)

We have determined that environmental assessments and environmental impact statements, as defined under the authority of the National Environmental Policy Act (NEPA; 42 U.S.C. 4321 *et seq.*), need not be prepared in connection with listing a species as endangered or threatened under the Endangered Species Act. We published a notice outlining our reasons for this determination in the **Federal Register** on October 25, 1983 (48 FR 49244).

It is our position that, outside the jurisdiction of the U.S. Court of Appeals for the Tenth Circuit, we do not need to prepare environmental analyses pursuant to NEPA (42 U.S.C. 4321 *et seq.*) in connection with designating critical habitat under the Act. We published a notice outlining our reasons for this determination in the **Federal Register** on October 25, 1983 (48 FR 49244). This position was upheld by the U.S. Court of Appeals for the Ninth Circuit (*Douglas County* v. *Babbitt,* 48 F.3d 1495 (9th Cir. 1995), cert. denied 516 U.S. 1042 (1996)).

Clarity of the Rule

We are required by Executive Orders 12866 and 12988 and by the Presidential Memorandum of June 1, 1998, to write all rules in plain language. This means that each rule we publish must:

(1) Be logically organized;

(2) Use the active voice to address readers directly;

(3) Use clear language rather than jargon;

(4) Be divided into short sections and sentences; and

(5) Use lists and tables wherever possible.

If you feel that we have not met these requirements, send us comments by one of the methods listed in the **ADDRESSES** section. To better help us revise the rule, your comments should be as specific as possible. For example, you should tell us the numbers of the sections or paragraphs that are unclearly written, which sections or sentences are too long, the sections where you feel lists or tables would be useful, etc.

Government-to-Government Relationship With Tribes

In accordance with the Presidential Memorandum of April 29, 1994 (Government-to-Government Relations with Native American Tribal Governments; 59 FR 22951), Executive Order 13175 (Consultation and Coordination With Indian Tribal Governments), and the Department of the Interior's manual at 512 DM 2, we readily acknowledge our responsibility to communicate meaningfully with recognized Federal Tribes on a government-to-government basis. In accordance with Secretarial Order 3206 of June 5, 1997 (American Indian Tribal Rights, Federal-Tribal Trust Responsibilities, and the Endangered Species Act), we readily acknowledge our responsibilities to work directly with tribes in developing programs for healthy ecosystems, to acknowledge that tribal lands are not subject to the same controls as Federal public lands, to remain sensitive to Indian culture, and to make information available to tribes.

We determined that there are no tribal lands that were occupied by the diamond darter at the time of this proposal that contain the features essential for conservation of the species, and no tribal lands unoccupied by the diamond darter that are essential for the conservation of the species. Therefore, we are not proposing to designate critical habitat for the diamond darter on tribal lands.

References Cited

A complete list of references cited in this rulemaking is available on the Internet at *http://www.regulations.gov* and upon request from the West Virginia Field Office (see **FOR FURTHER INFORMATION CONTACT**).

Authors

The primary authors of this package are the staff members of the West Virginia Field Office.

List of Subjects in 50 CFR Part 17

Endangered and threatened species, Exports, Imports, Reporting and recordkeeping requirements, Transportation.

Proposed Regulation Promulgation

Accordingly, we propose to amend part 17, subchapter B of chapter I, title 50 of the Code of Federal Regulations, as set forth below:

PART 17—[AMENDED]

1. The authority citation for part 17 continues to read as follows:

Authority: 16 U.S.C. 1361–1407; 16 U.S.C. 1531–1544; 16 U.S.C. 4201–4245; Pub. L. 99–625, 100 Stat. 3500; unless otherwise noted.

2. In § 17.11(h) add the following to the List of Endangered and Threatened in alphabetical order under FISHES:

§ 17.11 Endangered and threatened wildlife.

* * * * *

(h) * * *

Species		Historic range	Vertebrate population where endangered or threatened	Status	When listed	Critical habitat	Special rules
Common name	Scientific name						
*	*	*	*	*	*		*
FISHES							
*	*	*	*	*	*		*
Darter, diamond	*Crystallaria cincotta*	U.S.A. (OH, WV, KY, TN).	Entire	E	TBD	17.95(e)	NA
*	*	*	*	*	*		*

3. In § 17.95, amend paragraph (e) by adding an entry for ''Diamond Darter (*Crystallaria cincotta*),'' in the same alphabetical order that the species appears in the table at § 17.11(h), to read as follows:

§ 17.95 Critical habitat—fish and wildlife.

* * * * *

(e) *Fishes.*

* * * * *

Diamond Darter (*Crystallaria cincotta*)

(1) Critical habitat units are depicted for Kanawha and Clay Counties, West Virginia, and Edmonson, Hart, and Green Counties, Kentucky, on the maps below.

(2) Within these areas, the primary constituent elements of the physical or biological features essential to the conservation of diamond darter consist of five components:

(i) A series of connected riffle-pool complexes with moderate velocities in moderate to large-sized (fourth to eighth order), geomorphically stable streams within the Ohio River watershed.

(ii) Stable, undisturbed, bottom substrates composed of relatively silt-free, unembedded sand and gravel.

(iii) An instream flow regime (magnitude, frequency, duration, and seasonality of discharge over time) that is relatively unimpeded by impoundment or diversions such that there is minimal departure from a natural hydrograph.

(iv) Adequate water quality characterized by seasonally moderated temperatures, high dissolved oxygen levels, and moderate pH, and low levels of pollutants and siltation. Adequate water quality is defined as the quality necessary for normal behavior, growth, and viability of all life stages of the diamond darter.

(v) A prey base of other fish larvae and benthic invertebrates including midge, caddisfly and mayfly larvae.

(3) Critical habitat does not include manmade structures (such as buildings, aqueducts, runways, roads, and other paved areas) and the land on which they are located existing within the legal boundaries on the effective date of this rule.

(4) *Critical habitat map units.* Data layers defining map units were created with USGS NHD GIS data. ESRI's ArcGIS 10.1 software was used to determine longitude and latitude in decimal degrees for the river reaches. The projection used in mapping was Universal Transverse Mercator (UTM), NAD 83, Zone 16 North for the Green River, Kentucky, unit; and UTM, NAD 83, Zone 17 North for the Elk River, West Virginia, unit. The following data sources were referenced to identify features used to delineate the upstream and downstream reaches of critical habitat units: USGS 7.5' quadrangles and topographic maps, NHD data, 2005 National Inventory of Dams, Kentucky Land Stewardship data, pool and shoal data on the Elk River, ESRI's Bing Maps Road. The maps in this entry, as modified by any accompanying regulatory text, establish the boundaries of the critical habitat designation. The coordinates or plot points or both on which each map is based are available to the public at the field office internet site (*http://www.fws.gov/westvirginiafieldoffice/index.html*), *http://www.regulations.gov* at Docket No. FWS–R5–ES–2012–0045 and at the Service's West Virginia Field Office. You may obtain field office location information by contacting one of the Service regional offices, the addresses of which are listed at 50 CFR 2.2.

(5) *Note:* Index map of critical habitat locations for the diamond darter in West Virginia and Kentucky follows:

BILLING CODE 4310–55–P

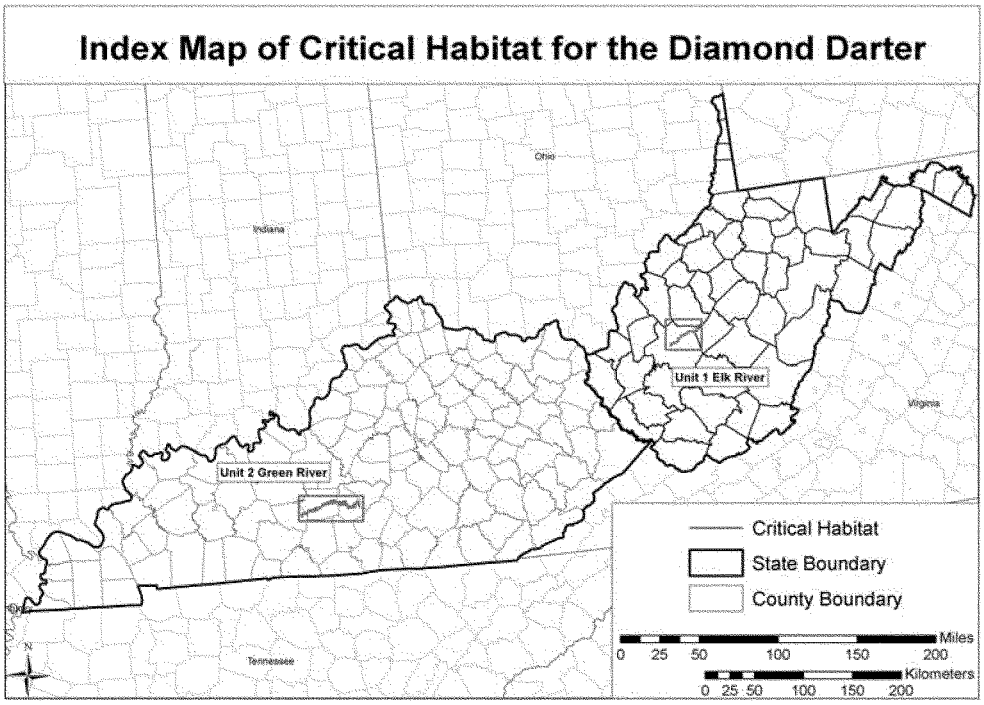

(6) Unit 1: Lower Elk River, Kanawha and Clay Counties, West Virginia.

(i) Unit 1 includes 45.0 km (28.0 mi) of the Elk River from the confluence with King Shoals Run near Wallback Wildlife Management Area downstream to the confluence with an unnamed tributary entering the Elk River on the right descending bank adjacent to Knollwood Drive in Charleston, West Virginia.

(ii) *Note:* Map of Unit 1 (lower Elk River) follows:

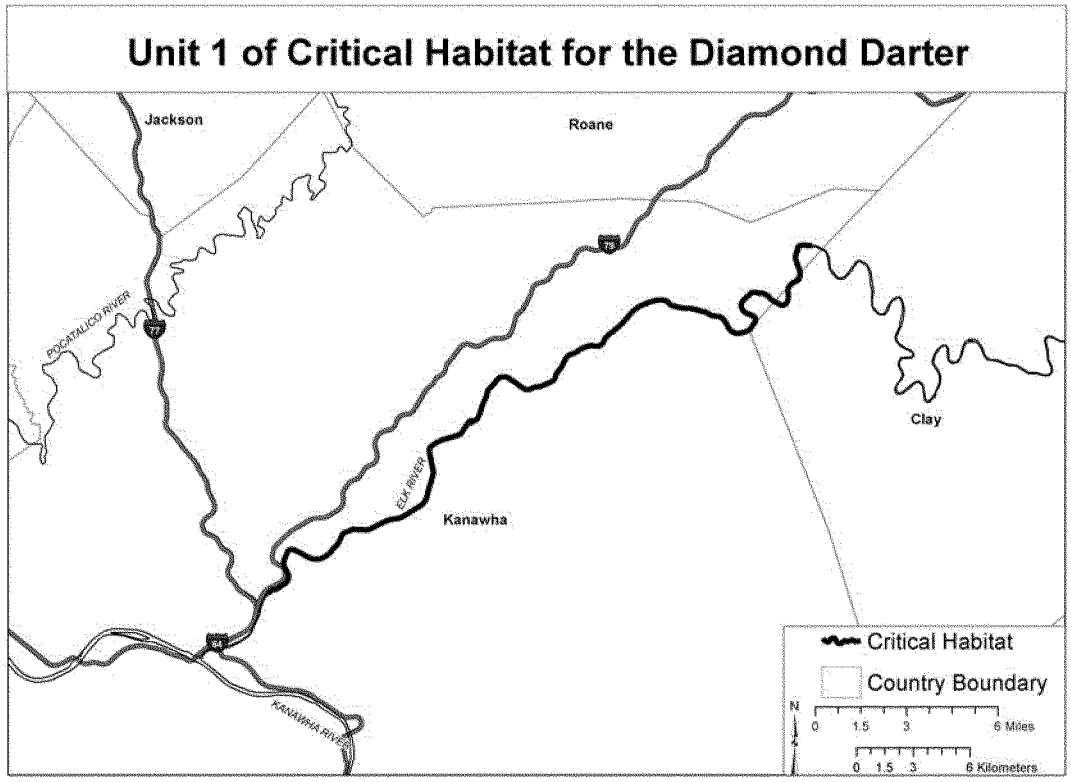

(7) Unit 2: Green River, Edmonson, Hart, and Green Counties, Kentucky.

(i) Unit 2 includes 152.1 km (94.5 mi) of the Green River from Roachville Ford near Greensburg (River Mile 294.8) downstream to the downstream end of Cave Island in Mammoth Cave National Park (River Mile 200.3).

(ii) *Note:* Map of Unit 2 (Green River) follows:

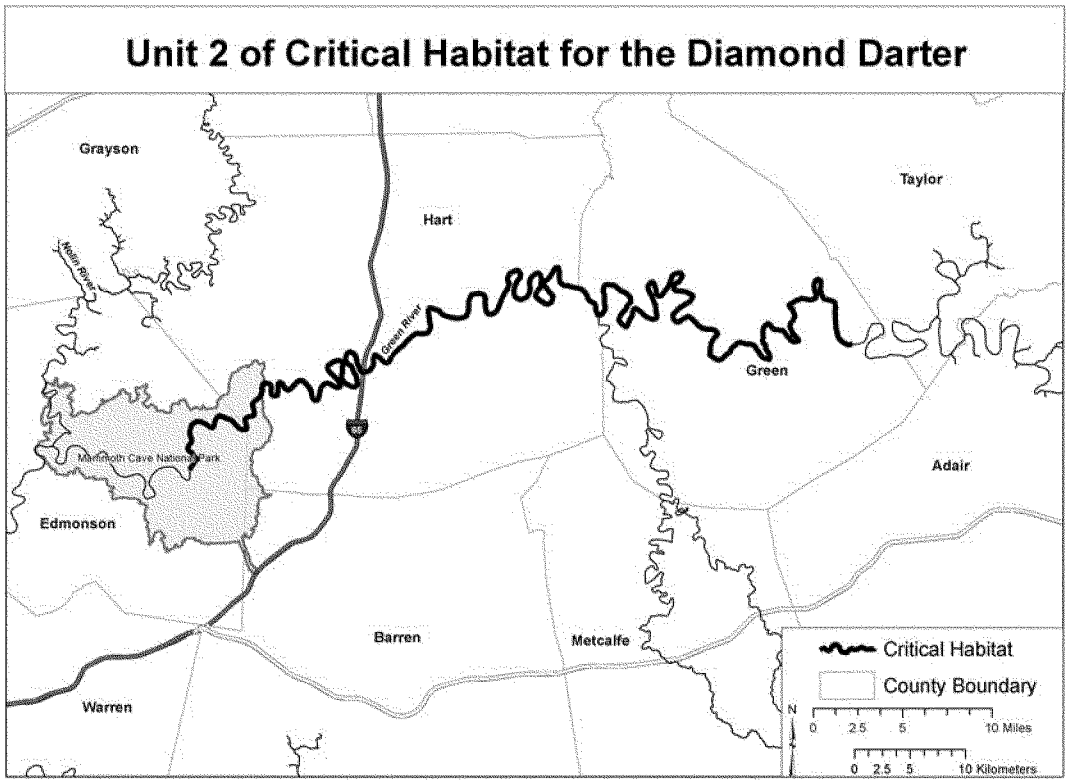

* * * * *

Dated: July 13, 2012.

Michael Bean,

Acting Assistant Secretary for Fish and Wildlife and Parks.

* * * * *

[FR Doc. 2012–17950 Filed 7–25–12; 8:45 am]

BILLING CODE 4310–55–C

FEDERAL REGISTER

Vol. 77 Thursday,

No. 144 July 26, 2012

Part III

Department of Commerce

National Oceanic and Atmospheric Administration

15 CFR Part 922

Expansion of Fagatele Bay National Marine Sanctuary, Regulatory Changes, and Sanctuary Name Change; Final Rule

DEPARTMENT OF COMMERCE

National Oceanic and Atmospheric Administration

15 CFR Part 922

[Docket No. 100908440–2181–02]

RIN 0648–BA24

Expansion of Fagatele Bay National Marine Sanctuary, Regulatory Changes, and Sanctuary Name Change

AGENCY: Office of National Marine Sanctuaries (ONMS), National Ocean Service (NOS), National Oceanic and Atmospheric Administration (NOAA), Department of Commerce (DOC).

ACTION: Final rule.

SUMMARY: The National Oceanic and Atmospheric Administration (NOAA) is adding five additional discrete geographical areas to the sanctuary and changing the name of the Fagatele Bay National Marine Sanctuary (FBNMS or sanctuary) to the National Marine Sanctuary of American Samoa (NMSAS). NOAA also is amending existing sanctuary regulations and applying these regulations to activities in the sanctuary.

DATES: *Effective Date:* Pursuant to section 304(b) of the National Marine Sanctuaries Act (NMSA) (16 U.S.C. 1434(b)), the revised designation and regulations shall take effect and become final after the close of a review period of forty-five days of continuous session of Congress beginning on July 26, 2012. Announcement of the effective date of the final regulations will be published in the **Federal Register**.

ADDRESSES: Copies of the final environmental impact statement (FEIS) described in this rule and the record of decision (ROD) as well as the final management plan are available upon request to Fagatele Bay National Marine Sanctuary, P.O. Box 4318, Pago Pago, American Samoa 96799, Attn: Gene Brighouse, Superintendent. The FEIS and final management plan can also be viewed on the Web and downloaded at *http://fagatelebay.noaa.gov.* Copies of the FEIS, ROD, final management plan and final rule can be downloaded or viewed on the Internet at *http://www.regulations.gov* or at *http://fagatelebay.noaa.gov.*

FOR FURTHER INFORMATION CONTACT: Gene Brighouse, Superintendent, Fagatele Bay National Marine Sanctuary, at (684) 633–5155 ext 264.

SUPPLEMENTARY INFORMATION:

I. Background

A. Fagatele Bay National Marine Sanctuary

Fagatele Bay National Marine Sanctuary was designated in 1986 in response to a proposal from the American Samoa Government to the (then) National Marine Sanctuary Program. The existing Fagatele Bay National Marine Sanctuary protects 163 acres (0.25 square miles) of bay area off the southwest coast of Tutuila Island, American Samoa. It nestles in an eroded volcanic crater. Fagatele Bay provides a home to a wide variety of animals and plants that thrive in the protected waters of the bay. It contains many of the species native to this part of the Indo-Pacific biogeographic region. Turtles, whales, sharks and the giant clam all find refuge in this protected area.

With this rulemaking, NOAA is re-naming the sanctuary ''National Marine Sanctuary of American Samoa'' (NMSAS) and expanding it to contain five additional discrete units: Fagalua/Fogama'a (described as Larsen Bay in the proposed rule), Swains Island, Ta'u, Aunu'u and Muliāva (Rose Atoll). For more information on the sanctuary, visit: *http://www.fagatelebay.noaa.gov.*

B. Purpose and Need for Additional Areas and Regulatory Changes

The National Marine Sanctuaries Act (NMSA) requires NOAA to periodically review and evaluate the progress in implementing the management plan and goals for each national marine sanctuary. NOAA must revise management plans and regulations as necessary to fulfill the purposes and policies of the NMSA (16 U.S.C. 1434(e)) to ensure that national marine sanctuaries continue to best conserve, protect, and enhance their nationally significant living and cultural resources. NOAA puts special emphasis on the effectiveness of site-specific techniques and strategies. The FBNMS management plan was published in 1986 and has not been updated since. On a global scale, the past 25 years have been a period of tremendous advancement in marine discovery and exploration, marine conservation science, and ecosystem-based management. New tools and techniques allow for improved management and conservation, which are needed to slow the long-term decline of coral reefs throughout the world. Recent archipelago-wide marine research efforts have led to comprehensive integrated ecosystem assessments of American Samoa's coral reefs. These studies have provided information on the relative biological value of different reefs across the territory, a critical step in determining where to focus marine resource protection efforts.

The environment within American Samoa has also changed over the past 25 years. The sudden growth of the commercial longline fishery in 2001; mass coral bleaching events in 1994, 2002, and 2003; and nonpoint source pollution from land-use practices are recent management concerns that may affect the health and resilience of American Samoa's marine ecosystems. The U.S. Coral Reef Task Force has established the conservation objective to protect ''a minimum of 20% of each coral reef and associated habitat type'' as no-take areas. The American Samoa Governor, like his predecessor in 2000, has committed to reaching this goal in American Samoa by setting aside 20% of the coral reef habitat within the territory for long-term protection.

Finally, Presidential Proclamation 8337 issued by President George W. Bush in 2009 states that, ''[t]he Secretary of Commerce shall initiate the process to add the marine areas of the [Rose Atoll Marine National] monument to the Fagatele Bay National Marine Sanctuary in accordance with the National Marine Sanctuaries Act (16 U.S.C. 1431 *et seq.*).''

C. Background

NOAA conducted a public scoping period in February and March of 2009 (74 FR 5641) to identify issues and gauge interest within American Samoa for possible sanctuary expansion and designation of additional sanctuary units. Scoping revealed some support for the protection of additional areas throughout the archipelago, as well as some opposition to additional sites. Specific comments received during this process are included in the final environmental impact statement (FEIS) and yielded a list of four sites for consideration. Three additional sites were included for consideration based on a specific request of the Jennings family (Swains Island), input from the Secretary of Samoan Affairs (Ta'u Island), and Presidential Proclamation 8337 (Rose Atoll, also called Muliāva in Samoan). Two additional sites were included for consideration based on preliminary biogeographic information analyzed by sanctuary staff (Fagalua/Fogama'a and Aunu'u).

After a list of nine potential sites was developed, the Sanctuary Advisory Council (SAC) established a Site Selection Working Group consisting of members of the SAC and of the public, assisted by sanctuary staff. The Working Group utilized criteria set forth in the

NMSA to evaluate the ecological, cultural, and economic value of the areas proposed. Based on this evaluation the areas were ranked in order. These locations were then further analyzed by NOAA through a Biogeographic Assessment of the Samoan Archipelago. Since the two Ta'u sites under consideration were so close geographically, they were combined into one proposed site, as recommended by the Governor. The sites at Nu'uli Pala, Leone, and Outer Banks were considered but eliminated for various reasons described in the FEIS.

During public scoping, some expressed concern over the expansion of FBNMS into a complex of units across the territory. The primary concerns reflected in the public comments were: (1) The Territory already has a process for establishing marine protected areas (MPAs); and (2) a federal presence would not allow for community-driven marine resource management. As a result of these concerns and NOAA's intention to respect the Samoan culture, NOAA chose each of the proposed units carefully taking into consideration the wishes of the communities as well as the criteria from the NMSA for designating a new national marine sanctuary and the results of a Biogeographic Assessment of the American Samoa Archipelago. After determining which units would be considered for inclusion, NOAA held multiple meetings with each of the communities associated with the units to foster consensus and collaboration with regard to how the unit would be managed. The development of location-specific regulations occurred through a collaborative process during community meetings between NOAA and village representatives. Issues addressed during the meetings included potential gear restrictions, fishing restrictions, and co-management of the sanctuary unit.

In October 2011, NOAA published a proposed rule (76 FR 65566), draft environmental impact statement and draft management plan and requested public comment on this proposal until January 6, 2012. Due to public requests as well as a request from the American Samoa delegate to the U.S. Congress to extend the public comment period, NOAA published an extension in the **Federal Register** on January 25, 2012 (77 FR 3646) and solicited public comment until March 9, 2012. The action presented in this document is the direct result of the SAC's recommendations that were provided to the FBNMS Superintendent, comments received during the 2009 public scoping and 2011–2012 public comment period. Several alternatives to this action are analyzed in the accompanying FEIS.

II. Proposed Revisions to FBNMS Terms of Designation

Section 304(a)(4) of the NMSA requires that the terms of designation for national marine sanctuaries include: (1) The geographic area included within the sanctuary; (2) the characteristics of the area that give it conservation, recreational, ecological, historical, research, educational, or aesthetic value; and (3) the types of activities subject to regulation by NOAA to protect these characteristics. Section 304(a)(4) also specifies that the terms of designation may be modified only by the same procedures by which the original designation was made.

To implement this action, NOAA is making changes to the FBNMS terms of designation, which were previously published in the **Federal Register** on April 26, 1986 (51 FR 15878). The changes would:

1. Modify the name of the sanctuary to ''National Marine Sanctuary of American Samoa.''
2. Modify Article 2 ''Description of the Area'' by describing the five additional areas.
3. Modify Article 3 ''Special Characteristics of the Area'' by adding additional areas of near-shore, mid-shore, deep reef, a seamount, open pelagic waters and other habitats and areas of cultural significance; and revise the description of the value of the sanctuary.
4. Modify Article 4 ''Scope of Regulations'' by updating Section 1 to expand the goal of the sanctuary to ensure the protection and preservation of the coral ecosystem; and revise Section 1 to include operating a vessel, moving, removing, or tampering with any sign or other sanctuary property, and introducing a non-native species in order to provide authority for sanctuary regulations.
5. Modify Article 4 ''Scope of Regulations'' by updating Section 2 to align the text more closely with the National Marine Sanctuaries Act.
6. Modify Article 5 ''Relation to Other Regulatory Programs'' by updating Section 1 to reflect a more coordinated and collaborative approach to enforcement between NOAA and the Territory of American Samoa.
7. Correct a few typographical errors throughout the terms of designation.
8. Delete Article 7 ''Funding'' because this language is not necessary to control the Joint Enforcement Agreements (JEA), as there is language in the JEA about how priorities are set and communicated among the enforcement partners.

The revised terms of designation will read as follows (new text in quotes and deleted text in brackets and italics):

Revised Terms of Designation for the American Samoa National Marine Sanctuary

Preamble

Under the authority of the National Marine Sanctuaries Act, 16 U.S.C. 1434 [*Marine Protection, Research and Sanctuaries Act of 1972, Pub. L. 92–532*] (the Act), certain waters off American Samoa are hereby designated a National Marine Sanctuary for the purposes of preserving and protecting this unique and fragile ecosystem.

Article 1. Effect of Designation

The designation of the [*Fagatele Bay*] National Marine Sanctuary ''of American Samoa'' (the Sanctuary) described in Article 2[.] establishes the basis for cooperative management of the area by the Territory of American Samoa (Territory) and the National Oceanic and Atmospheric Administration (NOAA).

[*Within the area designated as the Sanctuary, t*]''T''he Act authorizes promulgation of such regulations as are reasonable and necessary to protect the values of the Sanctuary. Article 4 of the Designation lists those activities which may require regulations, but the listing of any activity does not by itself prohibit or restrict it. Restrictions or prohibitions may be accomplished only through regulation, and additional activities may be regulated only by amending Article 4.

Article 2. Description of the Area

[*The Sanctuary consists of 163 acres (0.25 square miles) of bay area off the southwest coast of Tutuila Island, American Samoa.*] ''The Sanctuary consists of six distinct units:

—''Fagatele Bay, which contains 163 acres (0.25 square miles) of bay area off the southwest coast of Tutuila Island, American Samoa.
—''Fagalua/Fogama'a, which contains 0.46 square miles of bay area off the southwest coast of Tutuila Island, American Samoa.
—''The waters around part of Aunu'u Island, American Samoa that contain 5.8 square miles.
—''The waters around part of Ta'u Island, American Samoa that contain 14.6 square miles.
—''The waters around Swains Island, American Samoa that contain 52.3 square miles.
—''The waters around Rose Atoll, called Muliāva in Samoan, that contain

13,507.8 square miles.'' The precise boundaries are defined by regulation.

Article 3. Special Characteristics of the Area

The Sanctuary contains a unique and vast array of tropical marine organisms, including corals and a diverse tropical reef ecosystem with endangered and threatened species, such as the hawksbill and green sea turtles, and marine mammals like the Pacific bottlenose dolphin. ''The Sanctuary also contains areas such as near-shore, mid-shore, deep reef, seamount, open pelagic waters and other habitats and areas of historical and cultural significance.''

The area provides exceptional [*scientific*] value as a[*n*] ''scientific,'' ecological, recreational, and aesthetic resource, and ''offers'' unique educational and recreational experiences.

Article 4. Scope of Regulations

Section 1. Activities Subject to Regulations. In order to protect the distinctive values of the Sanctuary, the following activities may be regulated [*within the Sanctuary*] to the extent necessary to ensure the protection and preservation of the coral ''ecosystem'' and other marine values of the area:

a. Taking or otherwise damaging natural resources.

b. Discharging or depositing any substance.

c. Disturbing the benthic community.

d. Removing or otherwise harming cultural or historical resources.

''e. Operating a vessel.''

''f. Moving, removing, or tampering with any sign or other Sanctuary property.''

''g. Introducing or otherwise releasing an introduced species.''

Section 2. Consistency with International Law. [*The regulations governing the activities listed in Section 1 of this Article will apply to foreign flag vessels and persons not citizens of the United States only to the extent consistent with recognized principles of international law, including treaties and international agreements to which the United States is signatory.*] ''The regulations governing the activities listed in Section 1 of this article shall be applied in accordance with generally recognized principles of international law, and in accordance with treaties, conventions, and other agreements to which the United States is a party. No regulation shall apply to or be enforced against a person who is not a citizen, national, or resident alien of the United States, unless in accordance with generally recognized principles of international law, an agreement between the United States and the foreign state of which the person is a citizen, or an agreement between the United States and the flag state of a foreign vessel, if the person is a crewmember of the vessel.''

Section 3. Emergency Regulations. Where essential to prevent immediate, serious, and irreversible damage to the ecosystem of the area, activities other than those listed in Section 1 may be regulated within the limits of the Act on an emergency basis for an interim period not to exceed 120 days, during which an appropriate amendment of this Article will be proposed in accordance with the procedures specified in Article 6.

Article 5. Relation to Other Regulatory Programs

Section 1. Other Programs. (a) NOAA may adopt all regulatory programs pertaining to fishing, including any regulations promulgated by the American Samoa Government and all permits, licenses, and other authorizations issued pursuant thereto under the following conditions:

(1) No alteration or modification of any Sanctuary regulation shall become effective without the written concurrence of both the Territory and NOAA; and

''(2)'' [*The Territory shall be responsible for enforcing all Sanctuary regulations to ensure protection for the values of the Sanctuary. NOAA will engage in enforcement activities only if requested by the Territory or if there has been significant failure to provide adequate enforcement as determined under this Section.*] ''NOAA and the Territory shall be jointly responsible for enforcing Sanctuary regulations to ensure protection for the values of the Sanctuary with the Territory being the preferred enforcement entity. NOAA and the Territory will cooperatively develop Joint Enforcement Agreements (JEA) to authorize the Territory to enforce federal laws.''

(b) Where the Territory shall propose any alteration or modification of the regulations described in Article 4, such alteration or modification shall be submitted to NOAA for agreement and simultaneous proposal in the **Federal Register**. Such alteration or modification shall be finally adopted unless, based on the comments received on the **Federal Register** notice and after consultation with the Territory, NOAA determines that the regulations with the proposed amendments do not provide reasonable and necessary protection for the values of the Sanctuary.

[*(c) Should NOAA preliminarily determine that there has been significant failure to provide adequate enforcement, it shall notify the Territory of this deficiency and suggest appropriate remedial action. If, after consultation, NOAA and the Territory are unable to agree that a deficiency exists or on an appropriate remedial action, NOAA may issue a final determination in writing specifying the deficiency and the appropriate action together with the reasons therefore. No less than sixty (60) days prior to issuing a final determination that calls for NOAA to take enforcement action, NOAA shall submit the proposed determination to the Governor of American Samoa. If the Governor finds that NOAA enforcement is unnecessary to protect the values of the Sanctuary, the Governor shall inform NOAA of his objections within thirty (30) days after receipt of the proposed determinations and NOAA shall give such finding presumptive weight in making its final determination.*]

''(c)'' [*(d)*] All applicable regulatory programs will remain in effect, and all permits, licenses, and other authorizations issued pursuant thereto will be valid within the Sanctuary, unless inconsistent with any regulation implementing Article 4. The Sanctuary regulations will set forth any certification procedures.

Section 2. Defense Activities. The regulation of those activities listed by Article 4 shall not prohibit any activity conducted by the Department of Defense that is essential for national defense or because of emergency. Such activities shall be conducted consistent[*ly*] with such regulations to the maximum extent practicable. All other activities of the Department of Defense are subject to Article 4.

Article 6. Alteration [to] ''of'' This Designation

[*(a)*] This designation may be altered only in accordance with the same procedures by which it has been made, including public hearings, consultation with interested Federal and Territorial agencies and the Western Pacific Regional Fishery Management Council, and approval by the Governor of American Samoa [*and the President of the United States*].

[*End of terms of designation*]

III. Summary of Revisions to the Sanctuary Regulations

A. Adding Five Units to the Existing Sanctuary

The amended regulations add the following five units to the sanctuary: (1) Fagalua/Fogama'a (described as Larsen Bay in the proposed rule), (2) Aunu'u

Island, (3) Swains Island, (4) Muliāva (Rose Atoll), and (5) Ta'u Island. NOAA chose these units based on the quality and diversity of their biological resources, their scientific and cultural value, and the specific desire of the communities intimate with these marine habitats, including the government of American Samoa. The Aunu'u Island, Fagatele Bay, and Fagalua/Fogama'a units are located along the southern coast of Tutuila. The remaining three units are at Ta'u Island, Muliāva, and Swains Island. All units include both shallow reef and deep waters and extend seaward from the mean high water line of the coast, with the exceptions of Muliāva (which extends seaward from the boundary of the Rose Atoll National Wildlife Refuge) and a portion of the Ta'u unit (which extends seaward from the boundary of the National Park of American Samoa). This action will increase the overall size of the sanctuary from 0.25 square miles to approximately 13,581 square miles, with the majority of this expansion (99%) resulting from the incorporation of the non-refuge marine areas of the Rose Atoll Marine National Monument (Muliāva unit).

All six units have intrinsic value that merits their inclusion in the National Marine Sanctuary System. Please refer to the FBNMS Web site and the final environmental impact statement supporting this rulemaking for more information and a map depicting the location of these areas.

Fagatele Bay and Fagalua/Fogama'a

The Fagatele Bay and Fagalua/Fogama'a units are the only bays in the territory formed by collapsed craters—a unique geological and habitat feature. In addition, similarities in the fish and coral population between these two sites make them useful replicates of one another for research purposes. Preserving Fagalua/Fogama'a as a complement to Fagatele Bay provides additional security for the habitats and species that occur in both bays. When they are protected in only a single location, rare and unique habitats and species are more vulnerable to natural disasters or human disturbance. Furthermore, protecting organisms in Fagalua/Fogama'a would both increase the genetic diversity of species in different microhabitats within Fagalua/Fogama'a and increase the abundance of local populations, resulting in increased overall resilience of the coral reef ecosystems. In addition, the prehistoric village site adjacent to the Fagatele Bay unit may offer important archeological insights into interactions between humans and the marine environment.

Aunu'u Island

The Aunu'u Island unit bears cultural resource significance due to a 19th century whaling vessel lost there. It also has a unique and vibrant patch reef system, and a coral shelf that provides a continuous habitat extending down to mesophotic reefs. The Aunu'u Island unit will be divided into two zones: A Multiple Use Zone (Zone A), where fishing would be allowed, and a Research Zone (Zone B), where all consumptive uses except trolling and surface fishing would be prohibited to provide a control area as a mechanism for research activities.

Ta'u Island

The Ta'u unit includes a unique fish community, as well as some extraordinarily large *Porites* coral colonies and provides a buffer zone for important cultural and living resources in the nearshore habitat (a part of the National Park of American Samoa).

Swains Island

The Swains Island unit is the northern-most emergent reef in the Territory, is isolated from the rest of the archipelago, and is comprised of unique fish and coral communities.

Muliāva

The Muliāva unit (Rose Atoll) is the easternmost emergent reef in the Territory, includes the Vailulu'u Seamount, and is a potentially key source of coral and fish larvae for Tutuila, the Manu'a islands, and Independent Samoa. Muliāva is also the only site with extensive pelagic habitat. In addition, the inclusion of the Vailulu'u Seamount in the Muliāva unit will provide sanctuary management, which highlights both its physical importance as the only hydrothermally active seamount in the U.S. EEZ around the American Samoa archipelago and its biological importance due to multiple diverse and unusual faunal communities. The Muliava unit's seaward boundary is contiguous with the Rose Atoll National Marine Monument, except that it includes the Vailulu'u Seamount.

B. Changing the Name to the National Marine Sanctuary of American Samoa

As a result of the proposed incorporation of five additional units across the archipelago, the current sanctuary name, Fagatele Bay National Marine Sanctuary, would no longer be appropriate. Therefore, NOAA is changing the name of the sanctuary to the National Marine Sanctuary of American Samoa (NMSAS).

C. Sanctuary Regulations

Existing regulations for the sanctuary (15 CFR part 922, subpart J) are revised as described below and will apply to activities in all units described above, except as noted below.

1. Definitions

In order to clarify the sanctuary-wide regulations described below, the following new terms are added to the definitions section: Clean, fishing, harmful matter, introduced species, live rock, and stowed and not available for immediate use.

2. Prohibited Activities: Sanctuary-Wide

The following activities are prohibited in all areas and units of the sanctuary:

- Discharging any material or other matter within the sanctuary. There are two exceptions to this prohibition. First, an exception is made for clean vessel deck wash down, clean vessel engine cooling water, clean vessel generator cooling water, clean bilge water, anchor wash, or vessel engine or generator exhaust. Second, in the Muliāva unit only, vessels conducting scientific exploration and research for either the Secretary of Commerce or Interior would be allowed to discharge treated effluent outside of 12 nm from the Rose Atoll National Wildlife Refuge from a Type I, II, or III U.S. Coast Guard-approved Marine Sanitation Device due to the impracticability of holding waste until the vessel is out of the sanctuary in such a large protected area. Other vessels conducting research or scientific exploration also would be allowed to discharge treated effluent consistent with these limitations if authorized by a permit.
- Using or discharging explosives or weapons of any description.
- Discharging any material from outside of sanctuary waters that enters the sanctuary and injures a sanctuary resource, both from land- and sea-based sources.
- Exceeding three knots within 200 feet of a dive flag.
- Disturbing the benthic community by dredging, filling, dynamiting, or otherwise altering the seabed.
- Damaging, removing or displacing any signs, notices, or placards, or stakes, posts, or other boundary markers related to the sanctuary.
- Failing to clearly display the blue-and-white International Code flag alpha ''A'' or the standard red-and-white U.S. ''diver down'' flag when operating a vessel while divers or snorkelers are in the water.
- Removing, damaging, or tampering with any historical or cultural resource.

• Taking any marine mammal, sea turtle, or seabird in the sanctuary, except as authorized by other statutes. (This activity is already prohibited in territorial waters under ASCA 24.0934–0935 and in federal waters under the Endangered Species Act and Marine Mammal Protection Act.)

• Anchoring, and the requirement to use a mooring buoy where available.

• Introducing or releasing introduced species from within or into sanctuary waters.

• Abandoning any structure, material, or other matter on or in the submerged lands of the sanctuary.

• Deserting a vessel aground, at anchor, or adrift in the sanctuary.

• Leaving harmful matter aboard an abandoned or deserted vessel in the sanctuary.

3. Sanctuary-Wide Prohibited Activities, Except the Muliāva Unit

Section 304(a)(5) of the NMSA requires that NOAA consult with the appropriate Federal fishery management council on any action proposing to regulate fishing in federal waters, from 3 miles to 200 miles offshore. NOAA is not promulgating any fishing regulations in federal waters at this time. All areas of the sanctuary are in territorial waters except the Muliāva unit, which contains federal waters. With the exception of the Rose Atoll National Wildlife Refuge, NOAA has the primary responsibility within the Monument regarding the management of the marine areas with respect to fishery-related activities. Fishing regulations for that area as well as the rest of the Pacific Monuments are being developed by the Western Pacific Fishery Management Council and NOAA's National Marine Fisheries Service, in accordance with the respective Presidential Proclamations from 2009. Therefore, the following fishery-related activities are prohibited in all areas of the sanctuary except the Muliāva unit:

• Possessing or using:

○ Poisons, electrical charges, explosives, or similar environmentally destructive methods of fishing or harvesting. This activity is already prohibited in territorial waters under ASCA 24.0911–0915 and in federal waters under 50 CFR 665.104(c) and 665.127(b).

○ Any type of fixed net, including seine and trammel nets, or drift gill nets (the use of cast or throw nets is not prohibited).

○ The use of SCUBA gear in conjunction with the use of spearguns, including Hawaiian slings, pole spears, arbalettes, pneumatic and spring-loaded spearguns, bows and arrows, and bang sticks.

○ Disturbing the benthic community by bottom trawling.

• The take of the following categories of organisms:

○ Live coral and wild rock (take is already prohibited in territorial waters less than 60 feet deep under ASCA 24.0927(a) and in federal waters under 50 CFR 665.125(c)).

○ Other bottom formations, including precious corals and crustose coralline algae (take of precious corals is already prohibited in territorial waters less than 60 feet deep under ASCA 24.0927(a)).

○ Giant clams [*Tridacna* spp.].

4. Unit-Specific Regulations

In addition to the sanctuary-wide prohibited activities described above, this rule promulgates unit-specific regulations for two (Fagatele Bay, and Aunu'u Island) of the six units that are proposed to be included as part of the NMSAS. The unit-specific regulations are of two types: (1) Allowable or restricted gear, and (2) allowable or restricted fishing practices. In the Fagatele Bay unit, all fishing is prohibited, effectively making that area a no-take zone. There are no site-specific restrictions for the Ta'u Island, Swains Island, and Fagalua/Fogama'a units because NOAA determined that the sanctuary-wide regulations that apply to these areas would be sufficient to meet the goals and objectives of the sanctuary. There are no site-specific fishing restrictions for the Muliāva unit at this time, as ONMS is awaiting Council/NMFS action regarding fishing regulations in that area.

A. Fagatele Bay

The regulations for the Fagatele Bay unit prohibit all take of sanctuary resources. While the FBNMS condition report (2007) rates most resources in good condition, a reduction in numbers and size of large predatory fish (e.g., Maori wrasse *Cheilinus undulatus*) from fishing has caused a fair/poor rating for these living resources. Prohibiting removal of all sanctuary resources will provide the opportunity for the natural environment to be restored to a more natural state.

B. Aunu'u Island

The Aunu'u Island unit is divided into two zones, Zone A and Zone B.

Zone A is the Multiple Use Zone, in which fishing will be allowed provided that vessel operators make their presence known to the sanctuary or its designate in the village of Aunu'u prior to entering the sanctuary to conduct extractive activities. Zone A will provide protection of the resources within this area, and will allow for a better understanding of current use levels of the area.

Zone B is the Research Zone, where surface fishing for pelagic species, including fishing by trolling, is allowed. The ONMS may issue permits for research activities that are otherwise prohibited by sanctuary regulations provided the applications comply with ONMS permitting procedures and criteria. In Zone B, all extractive activities of bottom-dwelling species, including trawling, are prohibited to provide a control area as a mechanism for research activities.

C. Muliava Unit

Due to the potential impact of vessel effluent discharges on resources of the Rose Atoll Marine National Monument, and to be consistent with the requirements of Proclamation 8337, NOAA has determined that only vessels that are engaged in scientific exploration or research activities on behalf of either the Department of Commerce or the Department of the Interior should be allowed to discharge treated effluent from a Coast Guard-approved Type I, II, or III Marine Sanitation Device (MSD). Such a discharge should only occur if the relevant agency determines that exiting the Muliāva unit to discharge would be impracticable under existing circumstances. Other vessels engaged in scientific exploration or research activities may be permitted to discharge on a case-by-case basis, which will be determined by following the permit process in 15 CFR 922.48 and 922.107 and in consultation with the Intergovernmental Governing Committee, which is comprised of ONMS, NMFS, U.S. Fish and Wildlife Service, and Government of American Samoa. Furthermore, no discharge would be allowed by any vessel within 12 nautical miles of the Rose Atoll National Wildlife Refuge.

5. Enforcement

The regulations will be enforced by NOAA and other authorized agencies (i.e., the U.S. Coast Guard, U.S. Department of the Interior, and America Samoan Department of Marine and Wildlife Resources) in a coordinated and comprehensive way. Enforcement actions for an infraction will be prosecuted under the appropriate statutes or regulations governing that infraction. The prohibition against catching or harvesting marine organisms includes a rebuttable presumption that any marine organism or part thereof found in the possession of a person

within the protected areas has been collected from the protected areas. Violation of any of these regulations is punishable under 15 CFR 922.45 with a civil penalty of up to $140,000 per incident, per day. In addition, violators could be held liable for response costs and damages resulting from any destruction, loss, or injury to any sanctuary resource (15 CFR 922.46). The penalty schedule for violations in national marine sanctuaries may be found at *http://www.gc.noaa.gov/enforce-office.html.*

6. Permitting

The newly added areas of the sanctuary will provide researchers a valuable opportunity to discern between human-induced and natural changes in the Samoan archipelago. Researchers will be required to obtain permits to conduct activities related to research that would otherwise be prohibited by the regulations.

NOAA's sanctuary-wide regulations and the site-specific regulations for the NMSAS (15 CFR part 922) allow the ONMS Director to issue permits to conduct activities that would otherwise be prohibited by the regulations. The authority to issue permits for activities in NMSAS is delegated to the Superintendent. Requirements for filing permit applications are specified in 15 CFR 922.104 of the ONMS regulations. Criteria for reviewing permit applications are also contained in the ONMS regulations at 15 CFR 922.104. In most sanctuaries, permits may be issued for activities related to scientific research, education, and management, among other categories of activities.

In complement to the existing regulations, which allow the Director to issue sanctuary permits for research, education, and salvage activities, NOAA is adding a category of sanctuary permit for management activities. Such a management category will allow otherwise prohibited activities that would assist in managing the sanctuary, either by NOAA or third parties. This will provide protection for the sanctuary's physical, biological, and historical resources by ensuring that no activity may cause long-term or irreparable harm to the resources of the sanctuary.

In addition, NOAA is deleting a redundant portion of the regulatory text pertaining to the conditions that the ONMS Director may place on a permit. Section 922.106(e) of the FBNMS regulations states that the ONMS Director may issue a permit subject to conditions ''as he or she deems necessary.'' The remainder of the paragraph describes a few of the conditions that the ONMS Director may include for permit issuance. However, these conditions are included in the phrase ''as he or she deems necessary,'' so removing the text does not result in any substantive change in the intent of the regulation. This is simply a technical change.

Presidential Proclamation 8337 (January 12, 2009; 74 FR 1577) states, ''The prohibitions required by this proclamation shall not restrict scientific exploration or research activities by or for the Secretaries, and nothing in this proclamation shall be construed to require a permit or other authorization from the other Secretary for their respective scientific activities.'' In order to be consistent with this requirement and in exercising NOAA's discretion under the NMSA, the Departments of Commerce and the Interior would not need a permit to conduct of scientific activities within the Muliāva unit.

Finally, NOAA currently is examining the permitting requirements now in place at all national marine sanctuaries, with the focus on the way that similar requirements might be harmonized. Future changes to these requirements could ultimately affect the permit regulations for NMSAS. Any changes to the permit requirement promulgated here would only occur subsequent to separate notice and comment.

7. Technical Changes

The regulations at 15 CFR 922.103 and 922.104 have also been updated to reflect the change of the local agency from the Economic and Development Planning Office (EDPO) to the American Samoa Department of Commerce (ASDOC). EDPO was the name of the local agency 25 years ago when the FBNMS was designated, but the agency has been renamed to ASDOC. This change is purely technical.

IV. Changes From Proposed Rule to Final Rule

1. Sanctuary Name

In the proposed rule (76 FR 65566), NOAA proposed to change the name of Fagatele Bay National Marine Sanctuary to American Samoa National Marine Sanctuary. This change was necessary due to the addition of five discrete units, which are separate from Fagatele Bay proper. During public comment, it was suggested that the name ''American Samoa National Marine Sanctuary'' implied that the new boundaries of the sanctuary encompassed the entire archipelago. In order to better reflect the new design of the sanctuary, NOAA will instead re-name the sanctuary as ''National Marine Sanctuary of American Samoa''.

2. Remove Prohibition on Take of Marine Plants, Crown-of-Thorn Starfish and Live Shells

During public comment, members of the public mentioned that a prohibition on taking crown-of-thorn starfish was unnecessary because these species were not targeted by any fishery be it traditional, recreational or commercial. More importantly, in the event of a crown-of-thorn starfish outbreak, which can have a high impact on coral reef ecosystems, it may be advantageous to allow take of this species as local residents try and mitigate the outbreak by removing those starfish. NOAA believes that for the reasons listed above, the prohibition on the take of crown-of-thorn starfish is unnecessary at this time and decided to remove it from the sanctuary regulations.

In addition, some comments indicated that live shells and marine plants are occasionally gathered for sustenance or cultural reasons and that since the impact on the ecosystem from such occasional gathering is minimal, it should be allowed. NOAA determined that the impact of very limited take of live shells and marine plants for those reasons would not have a negative impact on the coral reef ecosystem at this time, and therefore decided to remove that prohibition from the regulations. If it becomes apparent through monitoring that such take is having a negative impact on the resources of the sanctuary, NOAA may decide to alter the regulations in the future.

3. Change to Boundaries at Swains Island Unit

The boundaries at Swains Island Unit were altered to exclude two channels that provide access to the island. The family who owns the island (the Jennings family) requested this boundary change to give them the flexibility to dredge the access channels at a future time for the purpose of health and human safety, and bringing development and tourism to the island. The rest of the sanctuary, apart from the two access channels, continues to circumvent the island to a distance of three nautical miles.

4. Change to Fishing Restrictions at Swains Island Unit

In the proposed rule (76 FR 65566), NOAA proposed to prohibit all fishing other than sustenance fishing in the Swains Island Unit. After considering the public comments, NOAA determined that a prohibition on fishing

was not necessary for the Swains Island Unit because of the extremely low fishing pressure currently occurring and projected to occur in the future. Swains Island is located approximately 200 miles from the main islands of American Samoa and therefore experiences a low visitation rate. NOAA determined that at this time the sanctuary-wide regulations are sufficient to fulfill the NMSA's primary mandate of resource protection at the Swains Island Unit.

5. Change to Fishing Restrictions at Fagalua/Fogama'a Unit

In the proposed rule (76 FR 65566), NOAA proposed to prohibit all fishing other than hook-and-line fishing. NOAA received public comments indicating that many members of the community use other forms of harvesting such as cast nets, spearfishing, and other non-destructive methods for sustenance and cultural purposes. At this time, NOAA believes that the fishing pressure of such existing methods is acceptable in the context of the resource protection mandate under the NMSA and therefore it is not prohibiting fishing using those forms of harvesting.

6. Change to Fishing Restrictions at Aunu'u Unit, Zone B (Research Zone)

In the proposed rule (76 FR 65566), NOAA proposed to prohibit all forms of fishing in Zone B of the Aunu'u Unit in order to create an area devoted to scientific research on coral reef ecosystems. Many commenters pointed out that the area where Zone B is located was a highly sought-after area for recreational fishing of pelagic species, including for recreational fishing tournaments which bring in tourism benefits to the American Samoa economy. NOAA's main goal for Zone B is to remove human impacts to the coral reef and its associated species for the purpose of research. Since surface fishing (including trolling) is not believed to have a strong impact on the coral reef and bottom-dwelling species of interest to NOAA, NOAA decided to allow such fishing in Zone B. The depth of the area, the absence of spawning aggregation, and the absence of major topographic or oceanographic features indicate that there is likely to be enough vertical zoning that would allow for surface fishing to occur without having major impacts to the bottom reef ecosystem. The intensity level of such fishing is unlikely to be significant, considering the small number of tournaments a year and low fishing pressure from the local population. The tournaments, while asserting small fishing pressure, provide valued tourism-based economic opportunities for the people of American Samoa. Although a complete fishing prohibition would have been preferable for scientific research purposes alone, NOAA believes that allowing surface fishing is a more appropriate management scheme in Zone B to prevent inhibiting the small tourism benefits that fishing tournaments bring to American Samoa. Fishing for bottom-dwelling species, including trawling, is prohibited.

7. Discharge Prohibition in Muliāva Unit

In the proposed rule (76 FR 65566), NOAA proposed to allow treated discharges from vessels equipped with a Coast Guard-approved Type I, II, or III marine sanitation device (MSD) in the Muliāva Unit. However, NOAA received input indicating that in order to remain consistent with Presidential Proclamation 8337, which established the Rose Atoll Marine National Monument, NOAA should limit discharges to vessels conducting scientific exploration and research in locations where a discharge would not injure a Monument resource. The Proclamation states that prohibitions within the Monument shall not restrict scientific exploration and research activities conducted by the Department of Commerce or Department of the Interior. Due to the potential impact of vessel discharges on Monument resources, NOAA has determined that only vessels that are engaged in scientific exploration or research activities on behalf of either the Department of Commerce or the Department of the Interior should be allowed to discharge treated effluent from a Type I, II, or III MSD. A discharge should only occur if the relevant agency determines that exiting the Muliāva unit to discharge would be impracticable under existing circumstances. Other vessels engaged in scientific exploration or research activities may be permitted to discharge on a case-by-case basis, which will be determined by following the permit process in 15 CFR 922.48 and 922.107 and in consultation with the U.S. Fish and Wildlife Service. No discharge would be allowed by any vessel within 12 nautical miles of the Rose Atoll National Wildlife Refuge.

V. Responses to Public Comment

This section contains NOAA's responses to the substantive comments received on the draft Environmental Impact Statement (EIS) and proposed rule. NOAA has summarized the comments according to the content of the statement or question put forward in the letters, emails, and written and oral testimony at the public hearings on this action. Many commenters submitted similar questions or statements that could be addressed by one response. NOAA also made a number of changes in the Final Management Plan and Final EIS in response to public comments, not summarized in this section, which were recommended technical updates or corrections to the documents. The original comments remain available for review on *www.regulations.gov* as well as at the sanctuary office.

Support for Preferred Alternative

While many of the following comments in this section capture opposition to various aspects of the proposed action submitted during the public comment period, a number of comments provided support for the process, as well as agreed with the overall approach taken by NOAA. Some commenters specifically offered support for this action, (including the Governor of American Samoa, the director of the American Samoa Department of Marine and Wildlife Resources (DMWR), the Secretary of Samoan Affairs, the manager of the American Samoa Coastal Management Program, representatives of the coral reef advisory group (CRAG) including the directors of the American Samoa EPA (AS–EPA) and American Samoa Department of Commerce (ASDOC) and the President of the American Samoa Community College (ASCC), marine scientists who have worked many years in American Samoa, as well as dozens of members of the public. During the public comment period, meetings between NOAA and village councils and Matai addressed misunderstandings and concerns expressed in numerous public comments, ultimately leading to general support for the proposed regulations and additional sanctuary units.

Reasons provided for this support include (1) the preservation of marine resources for future generations, (2) the ecological value of Fagalua/Fogama'a, (3) the need of sanctuary protection for the giant corals off of Ta'u, (4) the importance of marine protected areas to maintain healthy fish populations and improve local fisheries by allowing conservation of larger individuals, (5) the socio-economic benefits that the activities of the management plan will bring to the Samoan people by creating jobs, providing funding, supporting tourism, respecting the culture, and securing the future, (6) the value of research, educational activities and outreach to support ocean literacy, enriched students and teachers, and promote reef health, and (7) the

important efforts the sanctuary is making with regards to Climate Change, Cultural Heritage and Community Engagement, and Marine Conservation and Science. NOAA appreciates this public support. The action reflects changes to a number of regulations of the proposed action to address scientific, socioeconomic and resource protection concerns, while remaining faithful to the mission of the sanctuary program and the goals of the sanctuary.

Need for Action (R1)

Comment: The document does not make a reasonable justification for the proposed action as required under the NMSA and the action will not benefit the villages adjacent to the proposed sanctuary units or the people of American Samoa as a whole. The fisheries are healthy, existing laws are adequate to protect marine resources from current human activities, and local management agencies have been successful in addressing emerging concerns. Many of the proposed regulations duplicate existing territorial laws or are poorly designed and will not protect marine resources.

Response: Section 301(b) of the National Marine Sanctuaries Act authorizes the Secretary of Commerce to ''to identify and designate as national marine sanctuaries areas of the marine environment which are of special national significance.'' Based upon this authority, designation of sanctuary sites is not limited to ecosystems in poor health, but also includes well-functioning ecosystems of high biological, cultural and historic value. According to the *Biogeographic Assessment of the Samoan Archipelago,* each of the units proposed for inclusion within the expanded sanctuary have among the highest ecological values across American Samoa for species and habitat diversity, species abundance, and total coral cover. The report notes that western Ta'u (coral and fish richness) and Aunu'u (fish biomass and richness) have particularly high ecological value, while Ta'u, Swains, and the northwest, southeast and eastern tip of Tutuila are coral and fish hotspot regions.

NOAA disagrees that these areas are not in need of protection. The effects of fishing are evident when compared to unpopulated reefs of the region (see Section 3.1.2.4 of the FEIS). While reefs are resilient to natural stressors including tsunamis and crown-of-thorns starfish outbreaks, reefs already stressed by human activity, including siltation, eutrophication, polluted runoff, and increased temperatures and acidification from climate change are less likely or take much longer to recover. Providing additional protection and management for a few high-value sites distributed across the archipelago as protection against these types of catastrophes can increase overall resilience for the reefs in American Samoa, and protect these resources for future generations.

Sanctuaries are required ''to facilitate to the extent compatible with the primary objective of resource protection, all public and private uses of the resources of these marine areas not prohibited pursuant to other authorities ''(NMSA § 301–(b)(6)).'' While the action includes one no-take zone (Fagatele Bay), there are numerous measures aimed at improving ecosystem health of all of the units while fostering public support, which is critical to achieve the goals of the expanded sanctuary. NOAA proposes prohibiting destructive gears and fishing practices, which will protect habitat and subsequently improve the overall ecosystem, while allowing traditional and other non-destructive fishing at all of the other units. The multiple use zone at Aunu'u is an innovative technique suggested by the community that would incorporate traditional management intended to foster community stewardship while providing for compatible uses. If successful, NOAA could consider its use at other units and in other sanctuaries. Other commenters felt that education was a better approach than asserting federal control through regulations and fines to promote reef health. The sanctuary agrees with the value of education, but believes that education and outreach combined with a variety of management techniques, including enforcement of regulations, is the best approach.

Finally, some commenters feel that the action provides no real protection at places where activity is low or other management agencies have regimes in place to protect resources (see the response to comment heading *Use Existing Management*). For example, Vailulu'u seamount, Swains Island, Rose Atoll, and the deep waters of the southern coast of Ta'u are not considered threatened by some commenters and some commenters felt that proposed regulations would add little to no protection over existing traditional management. The types and extent of the deep-water resources in many of these areas is currently unknown, although research efforts from other deep-water areas are making fascinating discoveries, which has prompted ONMS to make these once-ignored habitats a research and conservation priority. Including deep-water and remote habitats under sanctuary designation will allow research and provide for educational activities considered important to the stewardship of our marine resources.

Use Existing Management (R2)

Comment: DMWR is the agency empowered to manage, protect, preserve and perpetuate the marine and wildlife resources in the territory, so this plan is a duplication of effort and a waste of money. In addition, the existing DMWR and NPAS community-focused conservation programs are accepted by the people of American Samoa. Fa'a-Samoa and Community Marine Tenure are the culturally appropriate means of management, while expansion of the sanctuary will cause the loss of local jurisdiction and disenfranchise the people from this permanent designation. Proper enforcement of existing local laws will adequately protect marine resources and overlays of existing managed areas are inefficient, confusing, and duplicative.

Response: This action complements efforts of DMWR, which will be a key partner in supporting the implementation of the action plans. DMWR outlined concerns and issues during the public comment period, and these have been addressed in the final document. It is important to note that this action is a joint effort of ONMS and the American Samoa Department of Commerce, which has been fully supported by the Office of Samoan Affairs, the Governor, and DMWR.

Specific rationale for incorporating each of the units is provided in Section 2.1.2.3 *Selection of New Sanctuary Units,* and includes gaps and management needs that the sanctuary intends to address. A primary purpose of expansion is to provide value-added support and collaboration to existing management efforts. The sanctuary will not take over DMWR's responsibility within the sanctuary units, and the management regime is structured to complement, not replace or be in conflict with, existing authorities, including the DMWR, NPAS, and USFWS. An entire action plan (*Partnerships and Interagency Cooperation*) combined with numerous activities from other action plans are intended to foster collaboration for the benefit of the resources and American Samoan people. The broader geographic scope of the sanctuary provides numerous opportunities to collaborate on this and other issues (e.g., technical assistance, streamlining permitting, assisting with the Governor's 20% no-take mandate) that are currently limited

to activities related to Fagatele Bay. Another comment suggested that the $8 million five-year sanctuary budget be used instead to improve village management without sanctuary expansion. The *Cultural Heritage and Community Engagement Action Plan* provides opportunities and structure to directly include villages in management activities. Sanctuary collaboration with additional communities would likely not be enhanced without expansion, further emphasizing the value of a territory-wide sanctuary presence. In addition, as with all ONMS regulations that reinforce existing regulations, the NMSA provides additional compliance mechanisms and supplemental enforcement and outreach resources, improving overall protection of sanctuary resources, further described in the response to comment heading *Enforcement.*

While fostering cooperation with other agencies is important, the focus of this action must be for the benefit of the American Samoan people, who have managed their ocean resources for 3,000 years. Commenters noted the traditional land management regime, adequate existing management and regulations, village enforcement, a preference to work with local agencies, and a history of failed support from the federal government. These concerns are understandable, given a lack of knowledge from some community members regarding NOAA, although, as this action shows, NOAA has made community engagement the cornerstone of its management plan, fostering traditional Samoan stewardship through education and outreach (*Ocean Literacy Action Plan*), discovering and protecting marine cultural and ecological resources (*Marine Conservation Science, Cultural Heritage & Community Engagement,* and *Resource Protection and Enforcement action plans*), partnerships (*Partnerships and Interagency Cooperation Action Plan*), as well as through innovative regulations that incorporate traditional management and active community participation.

NOAA's sanctuary management plan proposes numerous activities that DMWR and other resource agencies are not engaged in. Some major examples include inventorying, assessing and providing federal protection for maritime heritage resources, and providing state-of-the-art education facilities and technologies including the Sanctuary Visitor Center of American Samoa, ''Science on a Sphere,''® and the OceansLive ONMS telepresence initiative. The management plan also identifies a number of opportunities for collaboration. The management plan includes *Activity RP&E–5.2: Assess threats to sanctuary resources posed by the Tutuila landfill facility,* which is a specific activity where the sanctuary will work directly with USGS and AS–EPA, pooling resources to accomplish this important task. The management plan also includes *Activity O&A–2.1: (Assess current status and future needs for human resources annually), which* provides a mechanism to understand the efforts and needs of other resource agencies to direct future sanctuary efforts to complementary activities that benefit all management partners.

The Sanctuary Advisory Council has 13 voting members, with nine of these positions non-governmental members representing research, education, fishing, ocean recreation, tourism, business, as well as three community-at-large seats. The four voting government members are representatives of four territorial agencies, including the ASDOC, DMWR, ASCC, and AS–EPA. This venue, which provides regular input on sanctuary management, serves as a conduit to address the community and partner agency issues and opportunities.

There was an objection to the designation of a sanctuary unit along Ta'u's west coast that encompasses the giant corals, believing that expansion of the National Park of American Samoa at Ta'u would be more parsimonious and effective due to its existing presence and relationship with the community. NOAA believes that the marine resources at this location have global significance and require immediate and comprehensive protection and management provided by this action and the implementation of the management plan. The objection to expansion at this location has been documented in the final EIS, and rationale for the proposed designation has been provided.

Sanctuary Competency (R3)

Comment: The management and enforcement at Fagatele Bay has been inadequate and has not validated the ability of ONMS to monitor and protect a much larger area. After 25 years of management of the bay, fish biomass is down, most people are unaware of its existence, and there has been no management review until now and only two reports on the sanctuary status since 1985. The sanctuary should focus on improving management of the existing sanctuary unit and expanding the education, outreach, and research principles across the territory, instead of regulatory expansion to new sites.

Response: NOAA disagrees with those public comments questioning competency. While the program was very small during the early years after designation, with minimal staff and a small budget, substantial progress has been made toward accomplishing the sanctuary's original four broad goals, documented in Section 1.2.3 Sanctuary Accomplishments of the Management Plan. Accomplishments are divided according to five broad topics: (a) Management, administration, and operations; (b) education/outreach; (c) research; (d) climate change; and (e) emergency response. As part of the management plan review, a new set of sanctuary goals have been developed in coordination with the Sanctuary Advisory Council (Section 1.4.2). The new goals maintain the intent of the 1984 goals while incorporating new ideas for a changing environment.

Sanctuary accomplishments are also reflected in the 2007 Condition Report which measures water, habitat, living resources, and maritime archaeological resources of the sanctuary. See: *http://sanctuaries.noaa.gov/science/condition/welcome.html*. In addition, scientific literature and monitoring reports on resources of FBNMS and American Samoa have been published since 1987 and are available at *http://fagatelebay.noaa.gov/html/publications.html.*

Enforcement at Fagatele Bay is not inadequate. Although for most of the sanctuary's history, NOAA did not have an on-island enforcement agent, NOAA OLE compensated for this by developing a Joint Enforcement Agreement (JEA) with DMWR. This JEA provides training and authorizes DMWR enforcement personnel to enforce both federal laws and regulations. The JEA specifically identifies at-sea activities to ''monitor and investigate illegal takes and other violations involving all marine life within the Fagatele Bay National Marine Sanctuary''. Over the past six years, there has been a single complaint about illegal fishing in the sanctuary, and NOAA OLE and DMWR partners responded to the complaint and identified the violators. As of 2012, NOAA has one special agent and one enforcement officer stationed in American Samoa. While the draft Management Plan did not provide a description of the current enforcement activities or the mechanisms that would be used for the proposed units, the final document includes a full description of sanctuary enforcement capabilities and the Joint Enforcement Agreement is in the Resource Protection and Enforcement Action Plan, as well as in Sections 3.1.5.2 and 3.2.1.3.

Network Issue/Scientific Rationale for Boundaries (R4)

Comment: The scientific validity of designating the proposed units individually and as a functioning MPA network is unproven in the document. There is no logical decision framework for assessing value of sites, or how they work in an ecological, geographic, organizational, or socioeconomic framework. MPA design principles should be used to create boundaries. Suggestions were made to exclude proposed sanctuary units and to include alternate sanctuary units for ecological and socioeconomic reasons.

Response: The final document removes the term ''network'', as some commenters felt that the term has a specific scientific meaning that reflects direct and proven ecological connections that improve resource status inside and outside MPA boundaries. As a primary agency within the American Samoa MPA Network, ONMS supports this long-term goal to provide territory-wide resilience to overfishing and other human impacts, understanding that success requires additional science and coordination with all marine resource agencies and partners in the territory (DMWR, NPS, USFWS, ONMS, NMFS, ASDOC, CRAG, and others). This proposed action supports and is consistent with this strategy to ''effectively coordinate existing and future MPAs to ensure the long-term health and sustainable use of the Territory's coral reef resources.''

Contrary to comments received, the site selection process and boundary designation employed scientific rationale, socioeconomic information, and community engagement. The biogeographic assessment provides scientific basis for designating units (see table 1–3 in the final MP/EIS). The rationale for the rejection or inclusion of proposed sites is provided in Sections 2.1.1 and 2.1.2.3, respectively, of the EIS. Public scoping and community meetings allowed for incorporation of community desires and the public review process has provided additional information to further identify and incorporate culturally important factors into the action, such as subsistence fishing grounds. Additional scientific rationale is discussed next under comment heading *Fishing Restrictions at Research Zone.*

Commenters argued that scientific design principles, including MARXAN, the *Framework for Effective Coastal and Marine Spatial Planning,* and Guidelines for Selecting No-Take MPAs of the *American Samoa Coral Reef MPA Strategy* (Oram 2006) were not utilized in site selection and boundary designation. The biogeographic assessment, however, provided the information to compare the ecological significance of distinct marine areas across the territory. Scientific studies noted that of the 20 distinct bioregions in American Samoa, 14 are represented in the existing MPA network discussed in Chapter 6 of the EIS. Of the six not represented, this action incorporates four, one at the Swains unit and three at the Aunu'u unit. Both of these units are also hotspots of ecological importance for coral and fish biomass and diversity. In addition, this action includes mesophotic reefs and the archipelago's only hydrothermally active seamount, important and poorly understood habitats absent in the existing network. This habitat variety is in line with spatial and geographic diversity components of the American Samoa Marine Protected Area Network Strategy principles. The concept of ''multiple redundancy'' as described in the Network Strategy is achieved by including Fagalua/Fogama'a, which is similar to Fagatele Bay. Another key element of the Network Strategy is protecting reproductive potential, where discrete populations of certain species are protected to maintain higher densities, ensuring there are always viable adults across the ecoregion to safeguard the entire population. This element is primarily addressed through (1) the prohibition on the take of giant clams within all sanctuary units, which is particularly important for a sessile broadcast spawner, as well as (2) through work with DMWR to address the status of large reef predators, including the bumphead parrotfish and giant trevally. NOAA also made a substantial effort to consider sites that are culturally and socially acceptable, meeting with villages, mayors and other local stakeholders throughout the process. These efforts have been documented in Chapter 2.

Presidential Proclamation 8337 (74 FR 1577) directed the Secretary of Commerce to ''initiate the process to add the marine areas of the [Rose Atoll Marine National] monument to the Fagatele Bay National Marine Sanctuary.'' Sanctuary designation fulfills the directive of the proclamation. In addition, Rose Atoll is considered one of the world's most pristine atolls, home to endangered turtles, birds and marine mammals, and meets the criteria of ''special national significance.'' Designation will allow for appropriation of funding for research, conservation, and education. Rose Atoll is currently a monument; however, regulations have yet to be codified in the CFR. Adding the unit to the sanctuary system would change this. Vailulu'u seamount is the only active hydrothermal marine habitat in American Samoa, and its unique ecosystem warrants protection, while inclusion imposes little to no economic impact, as it lies within the Large Vessel Prohibited Area and no fishing regulations are being proposed for the area by this action. Value will be added to the seamount in terms of education, research, and fostering a sense of stewardship.

Commenters argued that the action will not protect coral reefs, as most units allow fishing. The proposed action includes one no-take zone at Fagatele Bay. The determination for fishing regulations was balanced by the needs for protection and the needs and support of the community, without which no-take areas are likely unenforceable. The term MPA is not synonymous with no-take. All units have regulations aimed at ecosystem protection. In addition, sanctuary designation will provide opportunities to increase monitoring that will allow for determinations as to the effectiveness of the proposed regulations.

One comment suggested extending the sanctuary to include the bank at Steps Point that is common to both Fagatele and Fagalua/Fogama'a. The proposed action does not change the boundary of the Fagalua/Fogama'a unit to incorporate this bank. The bank extends well offshore, which would be a significant change from the draft document that would require additional public comment. In addition, the paper cited in the comment as rationale to include this bank does not include compelling information for inclusion at this time. NOAA will review additional scientific and socio-economic information of this area and may consider this recommendation in the future.

Rationale for Fishing Restrictions in the Aunu'u Research Zone (R5)

Comment: The rationale for the location of the research zone is flawed based on ecological, logistical and economic conditions. What are the supporting ecological data for the location, size, and boundaries? These pelagic waters are no different than other pelagic waters within the territory. The depth and year-round rough sea conditions on the south side of Aunu'u make the site logistically unsuitable for research. Site the research zone on the north side of the island, away from prime fishing grounds. The site is a prime recreational and subsistence

fishing spot, which would financially burden fisherman (increased transit costs) and push them to operate in unsafe and unfamiliar waters. If the site is chosen, Aunu'u residents should be exempt from the no-take rule and traditional, non-destructive fishing methods should be permitted. An open-season should be established and regulations should only last long enough to allow the fish population to grow. The research zone should remain open, while still facilitating scientific data collection from this area.

Response: The designation of the research zone elicited diverse and extensive public comments, which NOAA considered carefully in the revision of the proposed action. NOAA stands by the decision to designate the area as a research zone over other proposed locations, with rationale for its unique qualities provided in Section 2.1.2.3 of the EIS. The one negative factor (potential for rough ocean conditions) was outweighed against numerous positive attributes. Furthermore, this designation is not a veiled way to create a no-take MPA, as alleged, but supports an integral aspect of ONMS' mission. As noted in Section 2.1.1.4, the idea of expanding the scientific goals of the sanctuary originated during public scoping, with designated research zones supported by the governor as well as within NOAA. The purpose of the research zone is to provide a control area as a mechanism for research activities that will increase the opportunity to discriminate scientifically between natural and human induced change to species populations and habitat condition. This includes controlling impacts from fishing, pollutants, anchoring and other benthic disturbances through fostering community stewardship, education and outreach, as well as through enforcement of regulations.

Upon the establishment of the research zone, NOAA will apply the activities in the sanctuary-wide Marine Conservation Science Action Plan to the area over the next 5 years. These include, among other things: Developing monitoring program protocols, assessing baseline conditions, conducting shallow-water reef habitat monitoring, and mapping and characterizing deepwater habitat.

There are few published reports on human uses in the area and a lack of available site-specific fishing data to conduct a conclusive analysis of the impacts of these fishing restrictions. The EIS relied on a few directed interviews and a socio-economic study that designated most of the area as zero to low effort for fishing, with an estimated annual economic value of $11,517 for subsistence and artisanal fishing for all of Aunu'u. Based on these sources, the draft EIS concluded that fishing restrictions within the research zone would have a less than significant impact to sustenance, sport, and small-scale commercial fisheries. Upon reviewing initial public comments, NOAA conducted additional discussions with DMWR, the Aunu'u community, and representatives of the sportfishing sector during the public comment period. These led to changes in the proposed action to mitigate potential impacts to these stakeholders (i.e., trolling and surface fishing will be allowed within the Aunu'u Research Zone, with catch data being shared by fishers with DMWR and the sanctuary). The allowance to target some coastal pelagic species, including rainbow runner, dog-tooth tuna and giant trevally, minimizes significant economic impacts to tourism, as well as safety issues and increased operating costs to recreational and subsistence fishers while maintaining a high level of protection for the resident species within the zone.

Through the Cultural Heritage and Community Engagement and Marine Conservation Science Action Plans, NOAA will engage with the Aunu'u community with regards to both the Multiple-Use Zone and the Research Zone. The results of research conducted in the research zone can be shared directly with the village of Aunu'u.

The safety of fisherman is of great importance to NOAA, and it is important to note that this action will not substantially displace fishermen, requiring them to fish farther offshore in unfamiliar waters. The final proposal includes only one complete no-take area, at Fagatele Bay. Regulations for the Research Zone at the Aunu'u unit have been amended for the final action to allow trolling and surface fishing. Thus, the proposed action closes 8% of the nearshore banks from the few bottomfishers that occasionally operate in these waters.

General Fishing Regulations (R6)

Multiple Use Zone Rationale (R6–A)

Comment: Significant fishing activities occur at Aunu'u Multiple Use Zone. The notification requirement provides no conservation benefit and is both an intrusion on centuries old fishing grounds and a burden to fishermen. Subsistence and recreational fishermen troll through this zone en route to other locations and pre-approval is not always a feasible option, especially in light of itinerary changes caused by weather conditions which dictate fishing location. If fishermen are unable to contact the representative on this short notice, they may be forced to cease operations. The notification requirement will also cause problems for fishing charters with cruise ship passengers who have very little time at port. If this is an appropriate mechanism to conserve marine resources, why is it not proposed for Larsen or Swains?

Response: NOAA concurs that the waters designated as the multiple-use zone are important fishing grounds for both Aunu'u residents as well as boat-based fishers from the south shore of Tutuila. The popularity of this area for fishing warrants increased monitoring to ensure sustainable fishing practices. The Aunu'u community raised this concern during village meetings and wishes the area to remain open to fishing, while protecting it from poor fishing practices and unsustainable harvest. By working with the village to develop appropriate management measures that address this issue while providing access to fishers from other communities, NOAA has improved the conservation of the resource, respected fa'a-Samoa through the promotion of traditional stewardship, and minimized impacts to recreational, artisanal, and charter fishing operations. In addition, the seaward boundary does not incorporate the majority of the bottomfish habitat on Nafanua and Taema Banks, a primary concern of boat-based fishers from Tutuila. Furthermore, NOAA understands that weather and other conditions can alter the plans of charter and other boat-based fishing, but believes that through open discussions with NOAA, Aunu'u village and this small group of vessels, appropriate mechanisms can be developed to alleviate these concerns. Because of the proximity of residents to the multiple-use zone, this requirement is more applicable and expected to be more successful at Aunu'u than the other proposed units. If successful, and with community and partner agency cooperation, NOAA would consider proposing similar notification requirements at other units as well. It is important to note that this is not a mechanism to require approval for fishing in the area, rather a system for notification of fishing in the area, and thus allowing for better monitoring of fishing effort. Through the Partnerships and Interagency Cooperation, and Cultural Heritage and Community Engagement action plans, sanctuary managers will collaborate with DMWR and the local villages to assess the

effectiveness of all sanctuary regulations.

Lost Commercial Fishing Opportunities (R6–B)

Comment: There is not a large commercial fishery in territorial waters (most local fishermen do not target bottomfish), but the proposed regulations would inhibit the development of the American Samoa fishing fleet. Local small-scale fishery enterprises were labeled as having ''* * * immense possibilities'' but it was indicated that time and resources were needed to develop the fisheries. Closures and commercial fishing bans around Rose, Swains, and Aunu'u will discourage this development. The 50 nm no-take around Rose Atoll will not biologically benefit highly migratory species.

Response: As described in the EIS, existing commercial fisheries will not be impacted by the proposed action. The existing Large Vessel Prohibited Area (LVPA) regulation (50 CFR 665.806) restricts longline vessels and purse seines larger than 50 feet in length from fishing within 50 nautical miles of the islands. All of the proposed units are within the LVPA. NOAA is not proposing any fishing restrictions within the boundaries of the Rose Atoll Marine National Monument. Commercial fishing restrictions in this area were imposed in 2009 by Presidential Proclamation 8337.

In light of concerns raised for both subsistence and small-scale commercial fishers, the proposed action has been modified with regards to numerous fishing restrictions. This includes removing the prohibition on the take of live shells, allowing for trolling and surface fishing in the Aunu'u research zone, removing the sustenance-only fishing requirement for Swains, and removing unit-specific gear restrictions (hook-and-line only) at Fagalua/Fogama'a. No proposed regulation prohibits fishers from selling legally caught catch.

The original purpose to protect live shells was due to concern for the shell trade, but as there is no trade at this time, the regulation and the issue will be monitored by sanctuary staff as part of education and outreach efforts. The rationale for allowing trolling and surface fishing at the Aunu'u research zone was presented in the comment heading rationale for *Fishing Restrictions at Research Zone.*

NOAA removed the restriction on taking fish out of the Swains Island unit after being informed that it is a cultural tradition to share fish caught in these waters with family and friends on Tutuila and the Manu'a islands. The low level of fishing, relatively high biomass of large reef species at Swain's, and large pelagic zone provided a basis to drop the restriction. The isolation of the area from larval recruits remains an issue of concern that NOAA will address through research and monitoring.

After community consultations with the Vaitogi, Futiga and Ili'ili villages during the public comment period, it was determined that the communities were against the restriction for only hook-and-line fishing in Fagalua/Fogama'a, and pressed for the allowance of non-destructive traditional fishing methods, including fishing for octopus, spear fishing without scuba, and gleaning (*i.e.,* harvesting by hand from the reef at low tide). As the intention of the draft proposed action was never to limit non-destructive, culturally-important fishing, NOAA agreed to modify this regulation.

While NOAA has reduced the number of fishing-specific regulations in the proposed action, NOAA remains confident that the various action plans and enforcement of the remaining regulations will allow for achievement of the sanctuary's revised goals and objectives.

Impact of Expansion on Population (R7)

Fishing Restrictions vs. Benefits (R7–A)

Comment: Sanctuary designation could lead to stricter fishing regulations in the future, eventually turning units into no-take zones. The anchoring prohibition is a supported measure, but traditional, non-destructive fishing methods should not be restricted (although other commenters stated that the hook-and-line only restriction is necessary to protect benthic habitats) and the sharing of fish caught at Swains Island with families who live elsewhere in the territory should remain allowed, as people depend on subsistence fishing to feed their families during difficult economic times. The economic impact analysis of the expansion may be misleading if fishing vessels were not taken into consideration when developing the boundaries. People are also concerned about losing access to land.

Response: NOAA considers the socioeconomic impact of its regulations an important issue and has attempted throughout the alternative development process to minimize impacts to subsistence and artisanal (i.e., small-scale commercial) fishers. This includes rejecting sites that could have a greater adverse impact than the units ultimately chosen (see Ch 2 of the FEIS for sites not selected), as well as designating sanctuary boundaries and regulations that allow for subsistence use while still protecting ecologically important areas. Changes to the draft proposed action that allow fishing at Fagalua/Fogama'a, Swains, and Aunu'u are discussed in response to comment heading *Lost Commercial Fishing Opportunities* in the Response to Comment Appendix A of the FEIS. These changes underscore that NOAA does not intend to restrict traditional access rights, does not plan to unilaterally create no-take zones, and has no regulations related to land use. Overall, subsistence fishers will not be restricted from harvesting the resources of the reef, particularly at locations where it most frequently occurs. The only species currently being harvested that will be protected under this rule is the giant clam, the harvest of which is more important culturally than economically. The restriction would protect locations across the territory for a species frequently overfished on reefs around the world, and is not common on American Samoan reefs. In addition this prohibition would protect other reef resources, since the harvest of giant clams requires breaking apart the reef (see Section 5.5.4.1 of the EIS for a thorough analysis). Subsistence fishing will remain permissible at all sanctuary units with the exception of Fagatele Bay, which would be completely no-take. These restrictions are expected to result in only minor economic impacts. The artisanal fishery economic value, estimated at $11,572 in the EIS, is based on a conservative estimate (i.e., likely higher than anticipated) for the entire action, across all proposed units.

Flexibility and Rationale of Fishing Regulations (R7–B)

Comment: While resources should be protected, fishing should still be allowed, with flexibility in designing regulations, including sunset clauses as the resources improve, especially to help adapt to the effect of climate change. The prohibition on the take of large reef fish should be included in the preferred alternative. Take of corals should be allowed by scientific permit. Prohibiting nets and harvest of giant clams and live shells is in opposition to NPS regulations. Crown-of-Thorns Sea Stars should not be protected. The prohibition on live shells is not well described. A reason for the exception of the goldmouth tuban is not provided.

Response: As described in above responses, traditional and sustainable fishing practices that do not impact the benthic habitat are predominantly allowed throughout the proposed sanctuary units. Increased monitoring

and data collection will provide necessary information to assess the condition of fishery resources. None of the proposed regulations have sunset clauses, as these prohibitions (e.g., gear that impacts the coral habitat) are designed to protect the ecosystem as a whole and not focus on increasing the abundance of specific resources. Nevertheless, regulations can always be amended if they are not effective or are no longer needed. The Sanctuary Advisory Council is designed to consider issues such as these on a regular basis, particularly during the five-year management review process. The proposed action does not include a prohibition on the take of large reef species, a proposal first developed by DMWR. Instead, the sanctuary will support the efforts of DMWR either through their process or in consultation through the sanctuary process. Regarding the scientific take of coral, the sanctuary has a scientific permit category, which could allow the permitted take of coral. The prohibitions on the use of nets and the harvest of giant clams do not conflict with National Park Service regulations, as the sanctuary does not overlap the National Park of American Samoa. The prohibitions on the take of crown-of-thorns sea stars and live shells (goldmouth tuban is a live shell) have been removed from the proposed action, based on a noted lack of threat. NOAA will address these issues through appropriate education and outreach.

Management (R8)

Sanctuary Management, Regulations and Access (R8–A)

Comment: A number of comments offered ideas for management of the sanctuary or questioned how the proposed management plan would achieve the sanctuary's goals. Suggestions included providing stipends or subsidies to stop destructive fishing practices, expanding research to include studies on water quality, fishing practices and fish stocks, clarifying public access and subsistence use within sanctuary units and adjacent lands, and developing clear plans that justify the regulations within the research zone, the purchase of an 85–100 foot research vessel, and the protection of cultural resources. Some comments acknowledged that the sanctuary has a socio-economic value and the proposed strategies and activities will help conserve resources for the future, providing future benefits and affording current uses.

Response: The management plan contains eight action plans (Chapter 4) that encompass a broad range of topics designed to directly address current priority resource management issues and guide management of the sanctuary over the next five to ten years. Members of the public and NOAA identified the list of issues addressed in each action plan. A number of the suggestions offered during the public comment period are related to currently proposed strategies and activities. While NOAA cannot legally provide stipends or subsidies as incentive to stop fishing activities currently illegal under territorial or federal law, dynamiting and other destructive fishing practices are antithetical to traditional practices and these issues can be addressed under *Activity CH&CE–2.4: Develop and implement a program to formalize community involvement in sanctuary stewardship within 3 years.*

The management plan identifies numerous research areas important to pursue in order to fulfill the goals and objectives of the sanctuary. Monitoring land-based sources of pollution is included under Strategy RP&E–5, and is specifically related to water quality. The issue is described as a specific resource threat noting the need for collaboration with territorial and federal partners on water quality monitoring at all sanctuary units. Analysis of impacts to land-based discharges is discussed in Section 5.5.2. As the sanctuary regulations follow AS–EPA regulations, if violations occur in sanctuary waters, collaboration between NOAA and AS–EPA would be a first step. In regards to management initiatives, NOAA looks forward to working with the AS–EPA, NPS and other partners to address land-based sources of pollution and their impact on water quality. Activities within the Marine Conservation Science Action Plan include developing a Sanctuary Science Plan (MCS–1.2) and conducting socioeconomic studies on local resource use, management and traditional knowledge (MCS–2.5) capture other suggestions provided by the public. To address questions about the management and protection of cultural resources, a new activity *CH&CE 4–6 Develop a maritime heritage and cultural resource protection plan within 5 years* has been added to the final management plan. In addition, maritime heritage is not just about shipwrecks, but also culture, which is thoroughly addressed throughout the Cultural Heritage and Community Engagement Action Plan. The known locations of maritime heritage resources have been detailed in this document, based on available published reports.

As to the purchase of a research vessel, as part of the development of a science and management program, NOAA developed a thorough Small Boat Requirements Study (FY2006–FY2015) and a draft Mission Requirements for a New Vessel. Analyses provided within these plans, based on expected requirements, demonstrate the need for a vessel in the 85–100 foot range, based upon distance to potential sanctuary units, possible sea states, time-on-station, and operational capabilities. The potential cost of the vessel is based upon new construction of a vessel specifically designed to meet mission requirements and the needs of our partners (as opposed to trying to find a vessel on GSA and retrofitting it to try and make it viable to serve these needs).

Land access to sanctuary units is a sensitive issue in American Samoa because of the land tenure system. The MP/EIS does not provide an analysis of land use, including sanctuary access, as the NMSA does not include jurisdiction or management over the land. Due to the nature of the resources protected, the sanctuary mandate also does not require immediate analysis of land access to sanctuaries, as access to sanctuary units can be by sea. However, NOAA will further consider access issues once it has made a decision on which, if any, additional areas are to be incorporated within the sanctuary. The CH&CE Action Plan is set up to provide for culturally appropriate discussion on this topic at the appropriate time.

Community Outreach and Education (R8–B)

Comment: Many comments were enthusiastic about past and proposed sanctuary education workshops and other outreach activities. Many noted the value of the sanctuary as a teaching mechanism to support positive change in Samoan communities. Comments also suggested outreach and education initiatives for the sanctuary, including combining NPAS and NOAA visitor centers and other services, providing scholarships that will empower the local people to improve stewardship of their waters, focusing on an open dialog and ongoing workshops with the community to increase knowledge of marine resources in the territory, and community involvement and outreach mechanisms that will promote benefits of the sanctuary to the villages. Comments noted that sanctuary information should be provided in Samoan as well.

Response: NOAA is pleased with the comments supporting the sanctuary's educational activities. As described in the management plan, particularly the Ocean Literacy Action Plan, NOAA will continue to offer formal and informal

educational opportunities for teachers, students, and the community. Plans include activities ranging from conducting outreach to American Samoan communities, to developing formal education materials for local grades K–12, and providing student leadership and internship opportunities. In addition, the Cultural Heritage and Community Engagement Action Plan includes other activities relevant to educating and empowering local communities: Training local volunteers as naturalists (Activity CH&CE–2.2), formalizing community involvement in sanctuary stewardship (Activity CH&CE–2.4), and providing hands-on training in maritime archeology (see Activity CH&CE–4.5). NOAA also looks forward to continued partnership with the American Samoa Coastal Management Program in implementing the management plan, including on public education issues such as ocean literacy. As noted in Activity Partnerships and Interagency Coordination-1.4, NOAA plans to work with the American Samoa Coastal Management Program staff to annually assess additional opportunities to collaborate towards mutual goals.

The current visitor's center plans are quite far along, and the National Park of American Samoa is already moving forward with its visitor's center. Due to the imminent completion of NOAA's visitor's center and the scheduling of the Park's visitors center, it is not possible to combine the existing and currently planned centers. However, NOAA is open to investigating future opportunities to improve the efficiency of the center's operations.

NOAA is not planning to provide funding to villages as part of the proposed project. In terms of scholarships, Section 1.2.3 describes available local and national opportunities both established and supported by NOAA and ASDOC. NOAA has added to Strategy OL–4 an activity describing plans to continue these opportunities. NOAA also provides national scholarships to qualified students (see ''Student Opportunities'' of *http://www.education.noaa.gov/*).

Informative brochures describing sanctuary resources have been translated into Samoan. The need for further dissemination of literature in Samoan and distribution of these materials to reach communities without internet access is recognized. To improve communication, the Ocean Literacy Action Plan's Activity OL–2.1 includes plans to conduct sanctuary outreach through television, radio and print media, as well as to develop a regular press release provided in English and Samoan to raise sanctuary awareness among media, decision makers and the public. NOAA acknowledges the importance of providing information in the Samoan language and sanctuary staff have and will continue to provide education and outreach information in Samoan and English when feasible.

Volunteers (R8–C)

Comment: NOAA's plan emphasizes volunteering. While internships and volunteers are good for short-term accomplishments, long-term goals will not be achieved by this approach. NOAA should pay volunteers, especially given the poor local economic situation and the $8 million requested to execute the management plan. NOAA's plan to develop a structured volunteer program is not an adequate means for engaging the local community. NOAA should assess whether the volunteer program is culturally appropriate as it is patterned after the Channel Islands National Marine Sanctuary where social conditions are entirely different.

Response: NOAA does not plan to achieve long-term sanctuary goals by relying on interns and volunteers. Rather, the Operations Action Plan indicates the need to increase staff support either through permanent positions or contract services, depending on a variety of factors described therein (see Strategy O&A–2). NOAA will make every effort to hire qualified personnel from within and around sanctuary units. Regarding interns and volunteers, Activity O&A–2.1 acknowledges that they can serve as alternative capacity building measures, and as such will also be considered in annual capacity building assessments. NOAA places great value on its volunteers and will investigate the possibility of developing paid volunteer positions. NOAA's plan does not indicate that the volunteer program would be patterned after that at the Channel Islands National Marine Sanctuary. Rather, it notes the Channel Islands case as an example of how volunteers can provide significant additional human resource capacity. However, in developing the sanctuary volunteer program NOAA may adapt aspects of successful volunteer programs across the national marine sanctuary system as relevant and culturally appropriate. Together the Cultural Heritage and Community Engagement Action Plan and Activity MCS–3.4 provide the public with opportunities to get involved in sanctuary management, education & outreach, resource protection and research.

Sanctuary Advisory Council/Traditional Management (R8–D)

Comment: NOAA's sanctuary advisory council membership does not accommodate the fa'amatai chief system, which, combined with Community Marine Tenure, is the traditional structure that should be harnessed in management. ONMS should grasp this unique opportunity to be truly a culturally-based national marine sanctuary program.

Response: NOAA agrees that the sanctuary presents a unique opportunity to incorporate local American Samoan culture into the national marine sanctuary system. While the sanctuary advisory council is not designed to incorporate the fa'amatai chief system, NOAA is confident that the council can accommodate this system, and has throughout the management plan update process. The importance of fa'a-Samoa and Community Marine Tenure is a cornerstone of the management plan and is incorporated throughout the MP/EIS. The first activity listed in the management plan, *Activity CH&CE–1.1: Support development of an advisory council working group on Samoan cultural heritage within 2 years,* is intended to address this specific public desire. A standing working group focused on incorporating traditional management provides both a venue to incorporate traditional community management efforts of Manu'a (e.g., Taisamasama, Muliāva, and Ku ulaula ole Fe'e) and of the villages of Vaitogi, Futiga, and Ili'ili (e.g., Fogama'a and Fagalua), as well as that of the chief system and Community Marine Tenure. This working group is an ideal forum to consider traditional management within a modern society. In addition, the Sanctuary Advisory Council is always a venue for chiefs to raise or address issues for sanctuary consideration. Chiefs may request an opportunity to be included on a council meeting agenda or present their case during public comments. The Sanctuary Advisory Council will continue to embrace traditional management.

Permitting (R8–E)

Comment: NMSA permit requirements should be in place for all federal agencies at all sanctuary units. Current language appears to provide USDOC and USDOI with an open exception to restriction for scientific activities at Rose Atoll. The administrative burden on permitting is not analyzed.

Response: Presidential Proclamation 8337 states that ''* * * nothing in this proclamation shall be construed to require a permit or other authorization from the other Secretary for their respective scientific activities.'' This action conforms to the language of the Proclamation.

Comment: NOAA should create maps of overlapping authority to help permittees and agencies determine what permits and authorities must be followed in a given circumstance.

Response: NOAA is not responsible for determining when or where a given activity outside of a sanctuary requires permits from another agency, but NOAA will collaborate with other permitting agencies in the Territory to minimize any possible confusion.

Comment: NOAA should focus on streamlining its process to fit the existing permitting structure of DMWR and NPS.

Response: Sanctuary permits are required in all sanctuaries for conducting activities otherwise prohibited by sanctuary regulations. NOAA has an existing permitting structure that is better tailored to tracking sanctuary permits than systems used by other agencies. More information can be found within *Strategy O&A–5: Track and, where necessary, permit activities occurring within the sanctuary.*

Federal Budget Limitations on Executing Management Plan (R8–F)

Comment: Given current federal budget issues, there will likely not be enough money to manage an expanded sanctuary or fund all of the activities listed. The document does not address how the sanctuary will continue to provide monitoring, enforcement, education, outreach, research and other activities in the event of budget shortfalls. The sanctuary should drop activities that are unattainable within a realistic budget.

Response: As explained in the introduction to the action plans (see *Estimated Cost of Management Plan Implementation*), estimated action plan costs help drive the ONMS annual funding allocation process, and in turn the budgetary reality drives what is attainable within each action plan. NOAA recognizes that resource limitations and necessary program and partner developments may limit implementation of all of the activities in the management plan. NOAA will continue to work with the Office of Management and Budget and Congress in developing supporting justifications when preparing budget submissions. The management plan articulates the full suite of potential sanctuary actions for the next 5 to 10 years. However, the sanctuary's budget may not allow for implementation of every planned activity. Activity O&A–1.4 (*Identify external funding opportunities*) explains that given that the federal budget is not always sufficient to fully implement all planned sanctuary activities, sanctuary staff will pursue alternative means of funding as necessary and appropriate.

Enforcement (R9)

Comment: Considering the enforcement at Fagatele Bay is inadequate, how does the sanctuary propose to monitor and protect a much larger area? For instance, the remote location of Swains Island makes it difficult and expensive to enforce. Do the benefits gained by protecting Swains Island outweigh the cost of enforcement? Will the sanctuary be effective if enforcement cannot be achieved? Details of DMWR's role in enforcement of sanctuary waters should be described in the document. In addition, the proposed fine amount ($140,000) is too steep for the people of American Samoa. The DMP should provide a breakdown of fines for different types of violations. Since there is not a federal court in American Samoa, there could be undue burden on the accused if they are required to travel to the mainland to appear in court.

Response: NOAA is aware of the challenges related to enforcing regulations in remote locations, but does not agree that enforcement at Fagatele Bay has been inadequate. Enforcement officers, like any police force, cannot be everywhere all of the time. The utilization of limited resources is a management decision determined by available information, technology, and circumstances that change over time. The management plan includes *Strategy RP&E–7 Protect Sanctuary Resources by Achieving Compliance with Applicable Laws,* which outlines plans to provide sanctuary enforcement, including in remote sanctuary units. NOAA's enforcement plans include developing enforcement agreements with partners, creating an enforcement task force, and investigating remote enforcement technology.

The American Samoa Environmental Protection Agency highlighted a critical concern for resource protection. While regulations in the territory are quite comprehensive, there is a lack of political and public will to enforce most environmental regulations. While sanctuary education and outreach materials are designed to help users understand regulations, the power of sanctuary regulations is held in the ability to prosecute offenders with a suite of fines and other penalties that offers a strong deterrent to potential violators. The penalty of $140,000 is a maximum monetary penalty for any violation as specified in the NMSA. The actual penalties levied for NMSA violations vary based upon the severity of the incident and other case-specific factors. NOAA's Office of the General Counsel Enforcement Section has established a penalty policy that that provides guidance for the assessment of civil administrative penalties and permit sanctions under the statutes and regulations enforced by NOAA. The penalty policy is publicly available and can be accessed through this link: *http://www.gc.noaa.gov/documents/031611_penalty_policy.pdf.* A full description of the enforcement protocol has been added to the final document to provide a clear understanding for the public.

NOAA believes in the value of providing protection and associated enforcement efforts in remote areas, such as those at Swains Island and Muliāva, as has been demonstrated at Papahanaumokuakea and the other remote and large Pacific Marine National Monuments. *Activity RP&E–7.3: Investigate the feasibility of using remote enforcement technologies and make determinations within 3 years* demonstrates the sanctuary's understanding for a variety of approaches to this issue. The new vessel, described under Activity O&A–4.1 indicates that NOAA plans to provide a vessel platform that could possibly be used for enforcement as well as research, monitoring, outreach and education, and emergency response. In addition, *Activity P&IC–3.1 Enhance communication and cooperation with federal agencies* notes plans to work with the U.S. Coast Guard for surveillance of remote proposed sanctuary units at Rose Atoll, Vailulu'u, Swains, and Ta'u. NOAA will collaborate on enforcement with other agencies that have concurrent jurisdiction via enforcement agreements and via the planned enforcement task force. NOAA's proposal also includes working with communities to foster sanctuary stewardship via interpretive enforcement, which would encourage vigilance and reporting (see Activity CH&CE–2.4).

NOAA's plan addresses funding and staffing for all proposed activities. The estimated annual costs of implementing NOAA's plan are provided in Table 4–1. This table does not reflect funding for implementing the Joint Enforcement Agreement between NOAA Office of Law Enforcement and DMWR as this is

derived from the NOAA OLE budget and not part of the sanctuary budget. NOAA does not currently plan to include enforcement staff among sanctuary personnel, but NOAA has addressed general plans for evaluating and meeting all sanctuary staffing needs in the Operations and Administration Action Plan (Section 4.4).

Process (R10)

Community Involvement (R10–A)

Comment: The overall consultation process failed to fully engage and gain the trust of the village councils, affected communities and families. This includes the absence of a proper agreement between the Aunu'u village council and NOAA, specifically regarding the proposed zones around Aunu'u. Similar concerns were expressed by chiefs of Manu'a with regards to the Ta'u Island unit and the chief representing the family that owns the land adjacent to Fagalua/Fogama'a Bay. Public meetings were not held in the appropriate villages or at inconvenient times, limiting the participation of those most affected. In addition, many of the villagers believed the process to speak only with the high chief or village mayor was inappropriate, as one high chief does not necessarily represent the whole village and each family has their own chief. Fishermen as a group were not consulted with regards to fishing restrictions. The process of designating MPAs is necessarily slow in order to obtain local community buy-in.

Response: NOAA believes that the initial negative public comments were predominantly related to information awareness, as many of the public comments related to concerns not related to the management plan review, including multiple letters that expressed worry about NOAA taking control of ancestral lands. The consultation process for the development of the DMP/DEIS was led by the Office of Samoan Affairs (OSA) and adhered to culturally appropriate protocols regarding community involvement and the village meeting processes. In a January 2011 letter, then Secretary of Samoan Affairs Tufele F. Li'amatua commended NOAA ''on the process that Fagatele Bay National Marine Sanctuary has used to solicit village input for the review of its management plan and possible expansion of the sanctuary in American Samoa''.

While NOAA conducted at least 26 community meetings between February 2009 and April 2011 related to the Management Plan Review ONMS, many of the public remain uninformed. Representative Eni Faleomavaega, aware of these concerns, held a town hall meeting on January 11, 2012 in Utulei that drew more than 100 people. Representative Faleomavaega outlined public concerns raised at this meeting in a letter to Dr. Jane Lubchenco on March 6, 2012, summarized in the comment above. NOAA made a great effort to address misunderstandings and public concerns with the villages during the extended public comment period (January 6–March 9, 2012), holding an additional six meetings, in which the Office of Samoan Affairs played a significant role in arranging and assisting in those meetings. As of the end of the public comment period, villages of Aunu'u, Vaitogi, Ili'ili, Futiga, and the Manu'a Islands had provided public comment in support of inclusion of the proposed site associated with their village. Extensive details of these community interactions are provided in Section 2.1.2.5 of the Management Plan. Concerns of the communities were considered very seriously by NOAA as is evident from numerous changes in the proposed action, outlined in the executive summary and Section 2.3 of the final Management Plan.

Fa'a-Samoa (R10–B)

Comment: The sanctuary's Guiding Principle #1, consistency with fa'a-Samoa, was not followed, as the village councils of Ta'u, Vaitogi, Aunu'u and the representative from Swains do not support the creation of these units. The draft management plan and EIS have many shortcomings, including incorporation of the traditional governance structure and subsistence fishing rights. Samoans have a communal sense of ownership over resources and have managed them traditionally for thousands of years. This federal program is not respecting the culture.

Response: Rather than calling for specific activities pertaining to the traditional governance structure, NOAA states on the first page of the proposal that fa'a-Samoa is the cultural context for all sanctuary activities and functions. As such, NOAA's intent is that the entire proposal be implemented in a culturally appropriate manner that is respectful of fa'a-Samoa and by extension, fa'amatai—the traditional chiefly system. ASDOC and the Office of Samoan Affairs are critical territorial partners in helping NOAA navigate the traditional governance structure as NOAA plans and implements sanctuary activities. The Cultural Heritage and Community Engagement Action Plan is the primary driver of incorporating traditional governance structure into sanctuary management, although most of the action plans include specific strategies and activities that promote and incorporate fa'a-Samoa.

Specific examples of traditional governance, including Customary Marine Tenure, are incorporated in both the final rule and the management plan. The management plan includes Activity CH&CE–2.4 involving communities in sanctuary stewardship via interpretive enforcement, as a means to achieve compliance with regulations through stakeholder trust and buy-in. A regulation for the multiple use zone at the Aunu'u Island unit requires notification to a village representative/sanctuary designee by anyone accessing and harvesting marine resources, as is customary under Customary Marine Tenure in Samoa.

NOAA has also received official letters from the former and current Secretaries of Samoan Affairs, commending the overall review process with regards to gathering public input and following Samoan protocols. In the more recent letter, Lefiti Pese stated ''* * * you have clearly followed our traditional protocols and successfully incorporated Fa'asamoa into your process.'' As the arbiter of culturally correct processes in American Samoa, OSA, under the leadership of two different Secretaries, clearly supports NOAA's efforts to incorporate fa'a-Samoa.

Regarding NOAA implementing *fa'a-Samoa* and the stakeholder consultation process, as well as incorporating traditional governance and protecting subsistence fishing rights, please see responses under the header ''Use Existing Management,'' ''Management,'' ''General Fishing Regulations,'' ''Process—Community Involvement,'' ''Process—Public Comment Period'' and ''Process—Scoping.''

Public Comment Period (R10–C)

Comment: The public comment period was inadequate and rushed by the federal government. There were only two meetings on Tutuila, with no meeting in Utulei or general meeting for fishermen. Meetings occurred during the palolo harvest, with a comment period that occurs during the busy Thanksgiving-Christmas-New Year time period. There was poor advertising prior to the meetings, which were held during work hours, thus many stakeholders could not attend. Those who attended the meetings were poorly informed, only recently hearing about the proposal, with no time to read and understand the details. The final MP/EIS should include detailed information

about the public consultation process, including: Dates, meeting notes, attendees count.

Response: NOAA published a Notice of Availability of the draft Management Plan/EIS on October 21, 2011 that began the 77-day public comment period that ended on January 6, 2012. At that time, sanctuary staff made the document available for download on its official Web site, as well as on CD and in hard copies from the office or sent by mail if requested. Copies of the document were also placed in libraries in American Samoa. Announcements of the proposed rule and draft management plan were made in the **Federal Register**, as well as numerous announcements in the Samoa News and on local radio programs. NOAA extended the public comment period an additional 63 days to March 9, 2012, with a total comment period of 140 days. During this time, NOAA conducted six additional village meetings to answer questions about the action and obtain direct public feedback (see Process—Community Involvement). As requested, the final Management Plan includes detailed information about the public consultation process, including dates, issues discussed and participants. Notes from these meetings are available on the sanctuary's Web site.

Scoping (R10–D)

Comment: The 2009 scoping meetings were inadequate. Due to poor advertising, most of the public was unaware of the sanctuary's plan to expand and very few people attended the meetings. Most of the public scoping comments were ignored.

Response: NOAA made a substantial effort to maximize public involvement in the scoping process, and utilized public input to shape the management plan revision. This process was conducted with full transparency. On January 30, 2009 NOAA publish a Notice of Intent (NOI) in the **Federal Register** outlining the process to initiate ''a review of the Fagatele Bay National Marine Sanctuary (FBNMS) management plan, to evaluate substantive progress toward implementing the goals for the Sanctuary, to initiate discussions on possible site expansion, and to make revisions to the plan and regulations as necessary to fulfill the purposes and policies of the NMSA.'' The NOI included the dates and times for three public scoping meetings in February, as well as a deadline of March 26, 2009, to submit ''comments from individuals, organizations, and government agencies on the scope, types and significance of issues related to the Sanctuary's management plan and regulations, and possible site expansion.'' In addition, the FBNMS and co-manager American Samoa-Department of Commerce prepared a list and brief description of preliminary priority topics to assist the public in focusing their comments. These were (a) Improved Partnerships, (b) Characterization and Monitoring, (c) Spill Prevention, Contingency Planning and Response, (d) Climate Change, (e) Ocean Literacy, (f) Marine Debris, and (g) Site Expansion. The public scoping period ran for 56 days, with comments accepted at the scheduled meetings, or mailed, faxed or emailed to the sanctuary office. NOAA advertised public scoping hearings through print, radio, and electronic media. A summary of the issues raised during public scoping was uploaded to the Fagatele Bay NMS Web site on April 30, 2009. Because the three public meetings on February 10th, 11th, and 12th occurred on Tutuila (west side, east side, and center of island), sanctuary staff also held public meetings at the high school on Ta'u (14 November 2009) and at the mayor's guest fale on Ofu (16 November 2009), where the management plan review was discussed in addition to the issue of the Rose Atoll Marine National Monument.

Regulation Development (R10–E)

Comment: Proposed regulations should be fully described to the public and then subject to consultation and approval from stakeholders. This is important because changing regulations that are against the wish of the community will be difficult. The sanctuary should work with the communities or this will become a ''paper park.''

Response: These concerns were discussed in village meetings during the extended public comment period. NOAA worked directly with the communities to revise site-specific regulations to achieve both the goal of resource protection and community support. Descriptions of these regulatory changes are discussed in the final EIS as well as in Response to Comments under the heading Rationale for *Fishing Restrictions in the Research Zone and General Fishing Regulations.*

Agency Cooperation (R10–F)

Comment: The expansion plans have not been fully developed in collaboration with local resource agencies, causing unnecessary conflict and confusion. The existing programs (DMWR and NPSA) have been ignored, which has damaged local partnerships. The proposed unit at Aunu'u went against the agreement with DMWR to not include sites under consideration for the territorial MPA process. Consultations with DOI (NPS and USFWS) should be conducted for any proposed expansion at Ta'u and Rose Atoll or changes to permit, discharge, or fishing regulations within the Marine National Monument. This lack of cooperation has negatively affected the MPA programs at DMWR and NPAS. EO 12866 requires NOAA to harmonize actions with local government and state agencies and seek out involvement of interested parties prior to issuing a notice of proposal. NOAA did not do this.

Response: NOAA disagrees with the assertion that it has not provided proper communication with other groups regarding its plans to establish new marine protected areas. During the process of releasing the draft management plan, DEIS and proposed rule for public comment, NOAA clearly articulated its proposal to these groups and the public-at-large. Further, whereas NOAA was legally required to provide a minimum of 45 days for public review of and comment upon its proposal, NOAA provided a public review and comment period of 140 days to ensure ample time for the public and other interested entities to provide feedback on the proposal. In addition, the sanctuary advisory council includes four government voting members from the ASDOC, DMWR, ASCC, and AS–EPA. NPAS holds a non-voting seat on the SAC. The SAC met regularly since the start of the management plan review process, and has established three working groups to focus on three key aspects of the review: (1) Site selection; (2) education/outreach; and (3) research and monitoring. The site selection working group was integral in developing the final list of proposed new units, while the education and research and monitoring groups provided much input into their respective action plans. DMWR and NPAS staff actively participated in the working groups.

NOAA also participated in three interagency meetings (11 August 2009, 13 August 2009, 5 April 2010) with the director of the DMWR, discussing among other issues, site expansion at Aunu'u, Larsen, Ta'u, Swains and Rose. Emphasis was placed on interagency collaboration, particularly at Aunu'u. In addition to these meetings, sanctuary staff offered the director and staff of DMWR the opportunity to participate in village meetings (described under Process—Community Involvement). NOAA also conducted interagency meetings with the USFWS regarding Rose Atoll and the NPAS regarding the

proposed sanctuary unit at Ta'u. A thorough timeline of territorial and other federal agency involvement has been developed and incorporated into Chapter 2 of the final Management Plan.

While the Partnerships and Interagency Cooperation Action Plan describes strategies to facilitate cooperation and coordination of management activities, it is premature to provide detailed analysis or prescriptions of how NOAA will implement future collaborations with other federal agencies. Agreements formalizing future collaborations must be agreed upon mutually by NOAA and partner agencies. It would not be appropriate at this time for NOAA to provide any details regarding exactly how future collaborations will be implemented. Nevertheless, NOAA has a well-established history of collaboration with federal, state and territorial agencies, including DOI agencies, across its national marine sanctuaries. In addition, sanctuary and park staff have a well-established history of collaborative efforts in terms of research and education.

Legal (R11)

Territory Right of Self-Governance (R11–A)

Comment: NOAA does not have the authority to propose regulations within territorial waters, as the action violates 48 U.S.C. 1661(b) [1] and the territory's right at self-governance (ASCA Title 24 Ch. 03) pertaining to the authority of DMWR to ''manage, protect, preserve and perpetuate'' marine resources in the territory. This issue also relates to any regulatory proposal for Swains Island per 48 U.S.C. 1662.[2] This violation applies for Proclamation 8337 as well. In addition, the legislature of AS expressly reserved the rights and entitlements of the chiefs in the Deeds of Cession {ASCA 24.0304(d) [3]}. This was violated as the legislature was not consulted. Lack of consultation is also in violation of EO 13132. The forefathers of American Samoa agreed for American Samoans to have full ownership of their land, shores, and natural resources in the Deed of Cession.

Response: NOAA has great respect for American Samoa's right to self-governance and for the right of American Samoans to use their family lands in traditional ways without interference from the federal government. For that reason, NOAA has expended a significant amount of effort and resources in consulting with officials of the American Samoa government, the Office of Samoan Affairs, Matai and local representatives, and the public. NOAA's goal throughout the management plan review process has been to create a management structure for the sanctuary that complements and enhances the work of the Territory and local communities in protecting natural resources while also being sensitive to and respectful of American Samoa's unique and rich culture.

The National Marine Sanctuaries Act, first passed by Congress in 1972 and reauthorized by Congress six times (most recently in 2000), provides NOAA with the authority to designate marine areas as national marine sanctuaries and to issue regulations regarding the management of national marine sanctuaries. NOAA's authority is consistent with the limitations set forth in the Ratification Act of 1929, 48 U.S.C. 1661, because that statute applies only to the then-''existing laws of the United States relative to public lands.'' The National Marine Sanctuaries Act is a conservation law, not a public lands law. This is demonstrated by the fact that the Act relates to marine areas, not lands, and also by its codification in Title 16 (Conservation) of the U.S. Code rather than Title 43 (Public Lands).

Additionally, the National Marine Sanctuaries Act was not law at the time of the passage of the Ratification Act, and therefore is outside the scope of that statute. As a result, NOAA's proposal is also consistent with the reservation of rights set forth in ASCA 24.0304(d). Importantly, nothing in the proposal affects American Samoa's right to self-governance, DMWR's authority to manage marine resources in the Territory, or the ownership rights of American Samoans with respect to their lands.

With regard to EO 13132, NOAA consulted and coordinated extensively with the American Samoa government, including the Governor's office, ASDOC, DMWR, AS–EPA, and the Office of Samoan Affairs (see Section 2.1.2.4). NOAA also met with Matai and local representatives and held several public meetings. Furthermore, the proposed regulations will not preempt American Samoa law, but will simply complement existing Territory authorities. Consequently, NOAA has satisfied any obligations it may have under EO 13132. A consistency determination was provided by the American Samoa Coastal Management Program, which maintains responsibility for issuing Land Use Permits, and through the Project Notification and Review System (PNRS) Board, includes consistency with the Department of Marine and Wildlife Resources. In addition, since the onset of this management plan review, ONMS has worked with the Governor of American Samoa and, through the Office of Samoa Affairs, the villages adjacent to the current and proposed new sanctuary units.

EO 12866 and Monument Designation (R11–B)

Comment: NOAA avoids the review process of EO 12866 by minimizing the economic impact on local fisherman through the claim that since Proclamation 8337 already banned commercial fishing at Rose Atoll, the sanctuary overlay would therefore not have an impact. WPFMC provided catch data showing 1,893,003 lbs (2001–2008) were harvested from this area and NOAA does not account for this loss. The people of Manu'a, with the majority support of indigenous fisherman, are working to ask President Obama to reevaluate the designation of Rose as a MNM and to have WPFMC implement a management plan. NOAA also fails to meet the burden of the Regulatory Philosophy stating ''compelling needs'' to promulgate regulations. EO 12866 requires NOAA to harmonize actions with local government and state agencies, not preempt them as the proposed rules suggest. EO 12866 requires that the agency should seek out involvement of interested parties prior to issuing a notice of proposal. NOAA did not do this.

Response: As this action is separate from Proclamation 8337, which went into effect on January 6, 2009, the EIS does not analyze the socioeconomic

[1] 48 U.S.C. 1661 Islands of Eastern Samoa (b) Public land laws; revenue—The existing laws of the United States relative to public lands shall not apply to such lands in the said islands of eastern Samoa; but the Congress of the United States shall enact special laws for their management and disposition: Provided, That all revenue from or proceeds of the same, except as regards such part thereof as may be used or occupied for the civil, military, or naval purposes of the United States or may be assigned for the use of the local government, shall be used solely for the benefit of the inhabitants of the said islands of eastern Samoa for educational and other public purposes.

[2] 48 U.S.C. 1662—The sovereignty of the United States over American Samoa is extended over Swains Island, which is made a part of American Samoa and placed under the jurisdiction of the administrative and judicial authorities of the government established therein by the United States.

[3] ASCA 24 Ch.3 24.0304(d) Reservation of Rights. The Territory of American Samoa does not by the passage of Sections 24.0304(b) and (c) or by the consent therein given, surrender to the Congress of the United States or any department of the government of the United States any of those rights or entitlements of the chiefs or the people which are guaranteed to them or retained by them under the following laws: (1) The Cession of Tutuila and Aunu'u, (2) the Cession of Manu'a Islands, and (3) Title 48 U.S.C. Sections 1661 and 1662.

impacts of the closure of the waters around Rose Atoll to commercial fishing based in the Proclamation. The impacts, as determined by WPFMC, are included under cumulative impacts (Chapter 6). Any future action taken by WPFMC regarding Rose Atoll MNM is beyond the scope of this FEIS. Chapter 1, Purpose and Need, of the FEIS articulates the reasons why these regulations are being promulgated. At every stage of this process, including well before the publication of the proposed rule, NOAA has consulted with other agencies (state and Federal) and interested parties. A detailed description of this consultation process can be found in Chapter 2 of the FEIS, which speaks to the extensive outreach conducted by NOAA which includes sanctuary advisory council, scoping and other public meetings as well as review and comment by the public on various documents and the DEIS.

NPAS Regulatory Conflict (R11–C)

Comment: Prohibitions within park boundaries is contrary to 16 U.S.C. 410qq–2(b).

Response: As the proposed action does not include an overlay of park boundaries, proposed regulations are not in conflict with NPAS regulations.

NEPA Consultation (R11–D)

Comment: The Management Plan Review and proposed expansion does not meet burden of communication with partners per NEPA. This caused confusion and burdened the NPS.

Response: NOAA disagrees with the assertion that it has not provided proper communication with other groups regarding its plans to establish new marine protected areas. See response to comment heading *Process—Agency Cooperation* for details on the level of inter-agency consultation that was conducted.

NMSA Cost Requirement (R11–E)

Comment: The proposal did not fully comply with NMSA [16 U.S.C. 1434(a)(2)] requirement to provide an annual cost of designation. The DMP/DEIS only provides 5 year cost, with no budget breakdown of costs to the Federal government. NOAA must prepare and publish a resource assessment about present and potential uses of the area per NMSA (16 U.S.C. 1433).

Response: An annual breakdown of costs by Action Plan is provided in Table 4.1 of the Management Plan. The $8 million figure cited in the summary of the management plan is the estimate required to fully implement the Management Plan, in its entirety, over the five years.

Socioeconomic Issues (R12)

Adequacy of Socioeconomic Analysis (R12–A)

Comment: A thorough socioeconomic analysis on a village-by-village basis is lacking in this document. This analysis needs to use relevant studies to determine the quantitative impacts to displaced commercial, recreational, and subsistence fisherman, including further transit costs; increased fishing pressure in other locations; and increased reliance on imported seafood; decreased catch; fishing ground congestion; and loss of traditional fishing. The draft Management Plan does not show that the MPA network was designed with the most reliable available socio-economic data to reduce impacts to users. NOAA should provide data and justification that the overall impact would be beneficial for ''expansion of sanctuary units will have no impact on commercial, subsistence or recreational fisheries.''

Response: NOAA relied on all relevant and available information in the analysis. NOAA did not conduct its socioeconomic analysis on a village-by-village basis because such information was not available—nearshore artisanal and small-scale fishery data is consolidated over large areas (e.g., Tutuila's south shore), and subsistence fishing catch and effort data are not available. Accordingly, NOAA's analysis was conducted examining impacts to each proposed unit of the sanctuary.

Information relied upon is cited in FEIS (Chapter 3, Affected Environment). The analysis in the FEIS was limited by the availability of relevant data. Much of the data that were available (number of registered fishing vessels, number of recreational fishermen, etc.) were often obtained through interviews with agency employees and stakeholder groups. Nearshore fishing effort was obtained through recently published DMWR and NOAA Fisheries documents and relevant peer-reviewed literature.

No economic analysis was conducted for the American Samoa federally-permitted longline fishery or other potential commercial fisheries within the boundaries of the Monument. This action is separate from the Proclamation 8337, which prohibits commercial fishing within the Rose Atoll Marine National Monument. The current action proposes no fishing regulations within the Muliāva unit or in any federal waters. Fishing regulations that implement the requirements of the Proclamation will be undertaken by separate action, which will allow the opportunity for public comment at a later date.

NOAA believes that adverse impacts related to fishing will be modest. NOAA went to great effort to minimize impacts to subsistence, artisanal, and recreational fishing that do not damage sanctuary resources. Allowances for non-destructive, traditional fishing methods have been made at all units except for Fagatele Bay, where the community endorsed a no-take zone. Trolling and surface fishing is now allowed at the Aunu'u Research zone so that local harvest and the burgeoning tourism-related recreational and charter fishing businesses are not impacted by this action, while still maintaining appropriate resource protection and monitoring measures. Prohibitions on the use of destructive gears, the take of corals and other bottom formations, and giant clams are warranted to protect the coral reef habitat for long-term sustainability, while posing minimal socioeconomic impacts. Because of these changes to the proposed action, many concerns previously raised in regard to fishery-related impacts are no longer relevant. The estimated total annual revenue loss from fishing regulations established in this rule is $11,572. This figure is likely high, as it was predicated on restrictions set forth in the proposed rule. As discussed above, changes made from the proposed rule have eased restrictions, making actual losses lower.

Indeed, these modest impacts are more than offset by socioeconomic benefits to American Samoa, achieved through the implementation of the management plan and the hiring of additional staff discussed in the EIS. While these benefits will be realized in American Samoa, the EIS does not dismiss negative impacts from the regulations due to benefits of the implementation of the management plan, as impacts and benefits may not affect the same people. Nevertheless, the FEIS does determine that the total socioeconomic effect is beneficial to the whole of American Samoa.

No Public Support Due to Socioeconomic Impacts (R12–B)

Comment: The public is not interested in resource protection if people will lose their fishing rights, and create additional food security and health concerns (i.e., increased risk for diabetes through decreased access to locally-available protein).

Response: NOAA has received a number of public comments in support of this action, in addition to multiple

letters of support from the Governor of American Samoa, indicating that a portion of the public is in favor of this action. Changes to the proposed action alleviate impacts to subsistence, artisanal and recreational fishers, as described above. NOAA concludes that the socio-economic impacts of the final document are substantially less than those expressed in the October 2011 draft and will have little impact on food security for the people of American Samoa.

EO 12866 and Environmental Justice (R12–C)

Comment: EO 12866 and Environmental Justice determinations are not substantiated with facts and citations. Regulations must impose the ''least burden on society.'' As no-take and subsistence regulations are proposed, they would be providing a burden on families to find new fishing grounds. Women and children would not get the jobs described in document, but subsistence fishing impacts would affect them disproportionately. Regulations should be amended to allow indigenous fishing and protect these rights from commercial interests.

Response: NOAA maintains that this action does not disproportionally impact specific sectors of the population. Indeed, additional access to areas for subsistence fishing is afforded under the final rule. See Lost Commercial Fishing Opportunities, Impact of Expansion on Population—Fishing Restrictions vs. Benefits—and other responses to socioeconomic issues for an explanation of how the final proposed action imposes the ''Least burden on society.''

Tourism (R12–D)

Comment: The tourism benefits claimed in the draft Management Plan/EIS are not justified. The establishment of Fagatele Bay NMS, Rose Atoll MNM, and Marianas Trench MNM has not resulted in increased boat-based tourism in those areas. There are no facilities for recreational scuba diving or other necessary infrastructure to support tourism, so the designation will likely not benefit tourism. There are no details on tourism plans contained in the document. Tourism thrives in the Florida Keys Sanctuary because of the sanctuary's efforts to preserve the physical and economic health of the region.

Response: NOAA believes that the creation of an expanded sanctuary in American Samoa will benefit the tourism industry. Sanctuary efforts are intended to preserve the health of these significant marine resources, including the giant corals of Ta'u, the unique reefs at Aunu'u, and the isolated and vibrant ecosystem at Swains Island. Under the sanctuary program, these spectacular resources will gain national and international attention. For example, one commenter noted that Jean Michel Cousteau planned visit to Swains Island drew much public interest, indicating Swains can be a tourism resource. Once designated as a sanctuary, NOAA will work with American Samoa's tourism industry, helping the local government and businesses promote these natural assets.

Misconceptions (R13)

Comment: The management plan and proposed expansion is politically and financially driven, trying to secure new NOAA jobs for non-Samoans and reaching the 20% no-take goal for U.S. reefs where political backlash will not happen. The expansion will consolidate marine resource management power with the federal government and ASDOC, instead of with the villages and the DMWR. Long-established fishing grounds are being taken from the families that own them.

Response: The purpose of the NMSA is not to take over management authority from local or other federal agencies, but rather to complement existing management, provide added value to these efforts including resources and expertise, and work in collaboration with these agencies.

Consistent with this statutory mandate, NOAA seeks to complement existing efforts protecting these marine resources. This goal is underscored by the collaborative efforts that have been undertaken throughout the 25-year history of the Fagatele Bay sanctuary.

1. The DMWR has participated in sanctuary-sponsored research projects,
2. DMWR conducts monthly enforcement activities in Fagatele Bay through a Joint Enforcement Agreement between DMWR and NOAA OLE. The conditions of this agreement are expected to be reviewed in light of the expanded sanctuary,
3. The DMWR has collaborated with the Sanctuary to support an annual boating safety refresher course,
4. The Sanctuary collaborated with the AS–EPA to develop water quality monitoring protocols in Fagatele Bay,
5. The National Park of American Samoa, the American Samoa Community College, DMWR, and other local agencies and organizations have collaborated with the sanctuary on research on humpback whales, outreach and education activities,
6. The development and maintenance of the Fagatele Bay Trail that connect Fagatele to Fagalua/Fogama'a Bay was a significant collaboration with local agencies and the people of Taputimu, Futiga and Vaitogi villages that makes Fagatele Bay accessible to the public and to island visitors,
7. The Sanctuary Advisory Council (SAC) consists of 13 voting members, who represent four territorial government agencies (DMWR, ASCC, AS–EPA, and ASDOC) as well as nine non-government positions from the community. The SAC meets regularly to provide advice and recommendations to the sanctuary superintendent on protection and management of the sanctuary.

Larsen Bay Is Fogama'a (R14)

Comment: The bay is called Fogama'a by the Vaitogi people, not Larsen Bay. NOAA has already taken steps of control by renaming the bay Larsen Bay.

Response: The name of the proposed unit has been changed to Fagalua/Fogama'a to indicate the cultural significance of this bay to the villages of Vaitogi, Futiga, and ili'ili.

Access to Land and Sanctuary (R15)

Comment: Coastal areas around Vaitogi are dangerous (over 20 people have lost their lives), but Larsen Bay is safe to fish and swim. The designation of Larsen as a sanctuary will prohibit the use of family lands, and access to the beach and ocean where villagers like to swim and hike.

Response: The NMSA does not provide NOAA with the authority to limit access to family lands, and NOAA has not suggested that it plans to affect the use of family lands in any way. In fact, the proposal does not restrict access to or recreational use of any of the sanctuary units.

Swains Island Concerns (R16)

Comment: There has been no assessment for a harbor on Swains Island. Suggest the Sanctuary change boundary from ''all areas around Swains Island'' to ''All areas around Swains Island located north of 11.020′ S Latitude.''

Response: NOAA has redrawn the boundaries of the Swains Island unit to exclude the existing channels and a small buffer zone around the channels to minimize socioeconomic impacts related to future maintenance and improvements. This change provides flexibility to dredge the access channels at a future time for the purpose of health and human safety, and bringing development and tourism to the island. Any maintenance or construction would require efforts to minimize water quality

and other habitat related issues within the surrounding sanctuary.

VI. Classification

A. National Marine Sanctuaries Act

Section 301(b) of the National Marine Sanctuaries Act (NMSA) (16 U.S.C. 1431) provides authority for comprehensive and coordinated conservation and management of national marine sanctuaries in coordination with other resource management authorities. Section 304(a)(4) of the NMSA (16 U.S.C. 1434) requires that the procedures specified in Section 304 for designating a national marine sanctuary be followed for modifying any term of designation. This action is revising the terms of designation (e.g., scope of regulations) for the FBNMS, which would be retitled the NMSAS. In accordance with Section 304, the appropriate documents are being submitted to the specified Congressional committees. NOAA is also required to comply with Section 304(a)(5) of the NMSA, which requires that NOAA consult with the appropriate Federal fishery management council on any action proposing to regulate fishing in federal waters. As stated in the preamble above, NOAA is not promulgating any fishing regulations in federal waters at this time.

B. National Environmental Policy Act

In accordance with Section 304(a)(2) of the NMSA (16 U.S.C. 1434(a)(2)), and the provisions of the National Environmental Policy Act (NEPA) (42 U.S.C. 4321–4370), a FEIS has been prepared for this action. The FEIS contains a statement of the purpose and need for the project, description of proposed alternatives including the no-action alternative, description of the affected environment, and evaluation and comparison of environmental consequences including cumulative impacts. Copies of the FEIS are available upon request at the address and Web site listed in the **ADDRESSES** section of this rule.

C. Executive Order 12866: Regulatory Impact

This rule has been determined to be not significant within the meaning of E.O. 12866.

D. Executive Order 13132: Federalism Assessment

There are no federalism implications as that term is used in E.O. 13132. The changes will not preempt State law, but will simply complement existing Territory authorities. In keeping with the intent of the Order, NOAA consulted with a number of entities within the region, including the American Samoa Government and the Western Pacific Regional Fishery Management Council.

E. Regulatory Flexibility Act

In accordance with the Regulatory Flexibility Act, 5 U.S.C. 601 *et seq.,* the Chief Counsel for Regulation at the Department of Commerce certified to the Chief Counsel for Advocacy of the Small Business Administration that this action will not have a significant economic impact on a substantial number of small entities. The factual basis for this certification was published with the proposed rule and is not repeated here. No comments were received regarding the certification or the level of economic impact of this rule. As a result, a final regulatory flexibility analysis was not prepared.

F. Paperwork Reduction Act

This rule contains a collection-of-information requirement subject to the Paperwork Reduction Act (PRA), which has been approved by the Office of Management and Budget (OMB) under control number 0648–0141. The public reporting burden for national marine sanctuary permits is estimated to average 1 hour per response, including the time for reviewing instructions, searching existing data sources, gathering and maintaining the data needed, and completing and reviewing the collection of information.

Nationwide, NOAA issues approximately 200 national marine sanctuary permits each year. Of this amount, FBNMS averages 1 to 2 permit requests per year, although no permits are currently active for activities within the FBNMS. Even though this proposed rule may result in a few additional permit applications, due to the additional units and an overall larger area under management, this rule would not appreciably change the average annual number of respondents or the reporting burden for this information requirement. Therefore, NOAA has determined that the proposed regulations do not necessitate a modification to its information collection approval by the Office of Management and Budget under the Paperwork Reduction Act.

No comments were received on the collection-for-information requirement promulgated in the permitting section of the sanctuary regulations. Notwithstanding any other provision of law, no person is required to respond to, nor shall any person be subject to a penalty for failure to comply with, a collection of information subject to the requirements of the PRA, unless that collection of information displays a currently valid OMB Control Number.

VII. References

A complete list of all references cited herein is available upon request (see **ADDRESSES** section).

List of Subjects in 15 CFR Part 922

Administrative practice and procedure, Coastal zone, Education, Environmental protection, Marine resources, Natural resources, Penalties, Recreation and recreation areas, Reporting and recordkeeping requirements, Research.

Dated: July 13, 2012.

David M. Kennedy,

Assistant Administrator for Ocean Services and Coastal Zone Management.

Accordingly, for the reasons set forth above, 15 CFR part 922 is amended as follows:

PART 922—NATIONAL MARINE SANCTUARY PROGRAM REGULATIONS

■ 1. The authority citation for part 922 continues to read as follows:

Authority: 16 U.S.C. 1431 *et seq.*

■ 2. Revise subpart J to read as follows:

Subpart J—National Marine Sanctuary of American Samoa

Sec.

922.100 Scope of regulations.
922.101 Boundary.
922.102 Definitions.
922.103 Prohibited or otherwise regulated activities—Sanctuary-wide.
922.104 Prohibited or otherwise regulated activities—Sanctuary-Wide except in the Muliāva Unit.
922.105 Prohibited or otherwise regulated activities—Unit-specific.
922.106 Management and enforcement.
922.107 Permit procedures and criteria.
Appendix to Subpart J of Part 922—American Samoa National Marine Sanctuary Boundary Coordinates

Subpart J—National Marine Sanctuary of American Samoa

§ 922.100 Scope of regulations.

The provisions of this subpart J apply only to the waters of the United States and the Territory of American Samoa that are located within the boundary of the National Marine Sanctuary of American Samoa (Sanctuary). Neither the provisions of this subpart J nor any permit issued under its authority shall be construed to relieve a person from any other requirements imposed by statute or regulation of the Territory of American Samoa or of the United States. In addition, no statute or regulation of the Territory of American Samoa shall

be construed to relieve a person from the restrictions, conditions, and requirements contained in this subpart J.

§ 922.101 Boundary.

The Sanctuary is comprised of six distinct units, forming a network of marine protected areas around the islands of the Territory of American Samoa. Tables containing the exact coordinates of each point described below can be found in Appendix to Subpart J—National Marine Sanctuary of American Samoa Boundary Coordinates.

(a) *Fagatele Bay Unit.* The Fagatele Bay Unit is a 163-acre (0.25 sq. mi.) coastal embayment formed by a collapsed volcanic crater on the island of Tutuila, Territory of American Samoa, and includes Fagatele Bay in its entirety. The landward boundary is defined by the mean high high water line of Fagatele Bay until the point at which it intersects the seaward boundary of the Sanctuary as defined by a straight line between Fagatele Point (−14.36527, −170.76932) and Steps Point (−14.37291, −170.76056) from the point at which it intersects the mean high high water line seaward.

(b) *Fagalua/Fogama'a Unit.* The landward boundary of the Fagalua/Fogama'a Unit is defined by the mean high high water line of Fagalua/Fogama'a until the point at which it intersects the seaward boundary of the Fagalua/Fogama'a Unit as defined by a straight line between Steps Point (−14.37307, −170.75852) and Sail Rock Point (−14.36534, −170.74119) from the point at which it intersects the mean high high water line seaward.

(c) *Aunu'u Unit.* The Aunu'u Unit is comprised of two adjacent zones.

(1) *Zone A.* The Aunu'u Unit boundary for Zone A is defined by the coordinates provided in Table 1 and the following textual description. The Zone A boundary extends from Point 1, the northwest corner of the unit, southward to Point 2 along a straight line following the western boundary of the unit, which is aligned with Taugamalama Point on Tutuila. It then extends northeastward in a multi-part line along the deepest seaward edge of Nafanua Bank from Point 2 to Point 3 and then to Point 4, which lies on the southern boundary of Zone B. The boundary then follows a straight line westward towards Point 5 until it intersects the mean high high water line at the southern tip of Ma'ama'a Cove. The landward boundary of Zone A is defined by the mean high high water line from this intersection point at the southern tip of Ma'ama'a Cove to the intersection of the mean high high water line and the straight line between Point 6 and Point 7 at Salevatia Point. From this intersection point at Salevatia Point, the boundary extends straight west to Point 7, which has the exact same coordinates as Point 1.

(2) *Zone B.* The Aunu'u Unit boundary for Zone B is defined by the coordinates provided in Table 2 and the following textual description. The Zone B boundary extends from Point 1, the northeast corner of the unit, southward along a straight line following the eastern boundary of the unit to Point 2, which is on the southern boundary of the unit. The southern boundary then follows a line westward towards Point 3 until it intersects the mean high high water line at the southern tip of Ma'ama'a Cove Point. The landward boundary of Zone B is defined by the mean high high water line from this intersection point at the southern tip of Ma'ama'a Cove around the volcanic crater to the intersection of the mean high high water line and the straight line between Point 4 and Point 5. From here, the boundary extends seaward straight north to Point 5. The northern border, the last straight line, is defined by connecting Point 5 and Point 6, along the northern boundary of the unit, which is aligned with Matuli Point on Tutuila. Point 6 has the exact same coordinates at Point 1.

(d) *Swains Island Unit.* The Swains Island Unit boundary is defined by the coordinates provided in Table 3 and the following textual description. The landward boundary of the Swains Island Unit is the mean high high water line. The seaward boundary of the Swains Island Unit is the territorial water boundary 3 nautical miles from the mean high high water line that surrounds the island. Within that area surrounding the island, there are two areas excluded from the sanctuary boundaries. The first excluded are extends from Point 1 along the mean high high water line northward along the western coast of the island to Point 2. From Point 2, the boundary extends offshore in a line perpendicular to the coast to Point 3. From Point 3, the boundary extends south-southwest to Point 4, and from Point 4 the boundary extends south-southeast to Point 5. From there, the boundary extends landward in a straight line to Point 6. The second excluded area extends from Point 7 along the mean high high water line northeastward along the southeastern coast to Point 8. From Point 8, the boundary extends offshore in a perpendicular line to the coast to Point 9. From Point 9, the boundary extends south-southwest to Point 10. From there, the boundary extends landward in a straight line to Point 11.

(e) *Muliāva Unit.* The Muliāva Unit boundary is defined by the coordinates provided in Table 4 and the following textual description. The landward boundary of the Muliāva Unit is the extreme low water line, which adjoins the boundary of the Rose Atoll National Wildlife Refuge. The Muliāva Unit seaward boundary extends from Point 1, the southwest corner of the unit, to Point 2 along a straight line northward following the western boundary of the unit. From Point 2, the line extends in a straight line westward to Point 3. It then extends along a straight line northward to Point 4. From Point 4, the line extends in a straight line eastward to Point 5. From Point 5, the line extends along a straight line northward to Point 6. It then extends along a straight line eastward from Point 6 to Point 7, which is on the eastern boundary of the unit. The boundary then follows a straight line southward until it intersects the line of the southern boundary of the unit at Point 8, the southeastern corner of the unit. The last straight line is defined by connecting Point 8 and Point 9, which has the exact same coordinates as Point 1, along the southern boundary of the unit.

(f) *Ta'u Unit.* The Ta'u Unit boundary is defined by the coordinates provided in Table 5 and the following textual description. The Ta'u Unit boundary extends from Point 1, Vaita Point, along the mean high high water line southward along the western coast to Point 2, Si'ufa'alele Point. From Point 2, the boundary extends offshore 0.25 miles to Point 3 to become conterminous with the offshore boundary of the National Park of American Samoa. From Point 3 the boundary continues to follow the coastline 0.25 miles offshore until it reaches Point 4, which is directly south of Si'u Point. From Point 4, the boundary extends due south to Point 5. From Point 5, the boundary extends due west to Point 6, forming the southern border of the unit. From Point 6, the boundary extends due north until it reaches Point 7, directly west and one mile offshore from Point 8, which is Point 1, also known as Vaita Point.

§ 922.102 Definitions.

In addition to those definitions found at § 922.3, the following definitions apply to this subpart:

Clean means not containing detectable levels of harmful matter.

Fishing means the catching, taking, or harvesting of marine species; the attempted catching, taking, or

harvesting of marine species; any other activity which can reasonably be expected to result in the catching, taking, or harvesting of marine species; or any operation at sea in support of, or in preparation for, any activity described in this definition.

Harmful matter means any substance, or combination of substances that, because of its quantity, concentration, or physical, chemical, or infectious characteristics, may pose a present or potential threat to Sanctuary resources or qualities, including but not limited to: fishing nets, fishing line, hooks, fuel, oil, and those contaminants (regardless of quantity) listed at 40 CFR 302.4 pursuant to 42 U.S.C. 101(14) of the Comprehensive Environmental Response, Compensation, and Liability Act.

Introduced species means any species (including, but not limited to, any of its biological matter capable of propagation) that is nonnative to the ecosystem(s) protected by the Sanctuary; or any organism into which altered genetic matter, or genetic matter from another species, has been transferred in order that the host organism acquires the genetic traits of the transferred genes.

Live rock means any Coral, basalt rock, or other natural structure with any living organisms growing in or on the Coral, basalt rock, or structure.

Stowed and not available for immediate use means not readily accessible for immediate use, e.g., by being securely covered and lashed to a deck or bulkhead, tied down, unbaited, unloaded, or partially disassembled (such as spear shafts being kept separate from spear guns).

§ 922.103 Prohibited or otherwise regulated activities—Sanctuary-wide.

(a) The following activities are prohibited and thus are unlawful for any person to conduct or to cause to be conducted within the Sanctuary:

(1) Introducing or releasing introduced species from within or into the sanctuary.

(2) Anchoring a vessel.

(3) Deserting a vessel aground, adrift, or at anchor.

(4) Leaving harmful matter on an abandoned or deserted vessel or structure.

(5) Operating a vessel at a speed exceeding three knots when closer than 200 feet (60.96 meters) of another vessel displaying a dive flag.

(6) Operating a vessel in a manner which causes the vessel to strike or otherwise cause damage to Sanctuary resources.

(7) Diving, snorkeling, or conducting diving or snorkeling operations from a vessel not in compliance with applicable U.S. Coast Guard navigation rules governing the display of lights and signals, and not flying in a conspicuous manner the international code flag alpha ''A'' or the standard red-and-white U.S. ''diver down'' flag.

(8) Discharging, or depositing from within or into the Sanctuary, any material or other matter, except clean vessel deck wash down, clean vessel engine cooling water, clean vessel generator cooling water, clean bilge water, anchor wash, or vessel engine or generator exhaust.

(9) Discharging or depositing from beyond the boundary of the Sanctuary any material or other matter that subsequently enters the Sanctuary and injures a Sanctuary resource or quality, except those listed in paragraph (a)(8) of this section and § 922.105(c).

(10) Sand mining, dredging, filling, dynamiting, or otherwise disturbing or altering the seabed.

(11) Removing, damaging, or tampering with any historical or cultural resource.

(12) Taking any marine mammal, sea turtle, or seabird within or above the Sanctuary, except as authorized by the Marine Mammal Protection Act, as amended, (MMPA), 16 U.S.C. 1361 *et seq.,* Endangered Species Act, as amended, (ESA), 16 U.S.C. 1531 *et seq.,* Migratory Bird Treaty Act, as amended, (MBTA), 16 U.S.C. 703 *et seq.,* or any regulation, as amended, promulgated under the MMPA, ESA, or MBTA.

(13) Using or discharging explosives or weapons of any description. Distress signaling devices, necessary and proper for safe vessel operation, and knives generally used by fishermen and swimmers shall not be considered weapons for purposes of this section.

(14) Marking, defacing, or damaging in any way, or displacing or removing or tampering with any signs, notices, or placards, whether temporary or permanent, or with any monuments, stakes, posts, or other boundary markers related to the Sanctuary.

(15) Abandoning a structure, material, or other matter on or in the submerged lands of the Sanctuary.

(b) The prohibitions in paragraphs (a)(1) through (15) of this section, § 922.104, and § 922.105 do not apply to any activity necessary for national defense.

(c) The prohibitions in paragraphs (a)(2) through (15) of this section, § 922.104, and § 922.105 do not apply to any activity necessary to respond to an emergency threatening life, property, or the environment.

(d) The prohibitions in paragraphs (a)(2) through (15) of this section, § 922.104, and § 922.105 do not apply to any activity necessary for valid law enforcement purposes in the Sanctuary.

(e) The prohibitions in paragraphs (a)(2) through (15) of this section, § 922.104, and § 922.105 do not apply to any activity conducted under and in accordance with the scope, purpose, terms, and conditions of a National Marine Sanctuary permit issued pursuant to 15 CFR 922.48 and 922.107.

§ 922.104 Prohibited or otherwise regulated activities—Sanctuary-Wide except in the Muliāva Unit.

(a) The following activities are prohibited and thus are unlawful for any person to conduct or to cause to be conducted within any unit of the Sanctuary except the Muliāva Unit:

(1) Gathering, taking, breaking, cutting, damaging, destroying, or possessing any giant clam [*Tridacna spp.*], live coral, bottom formation including live rock and crustose coralline algae.

(2) Possessing or using poisons, electrical charges, explosives, or similar environmentally destructive methods of fishing or harvesting.

(3) Possessing or using spearguns, including such devices known as Hawaiian slings, pole spears, arbalettes, pneumatic and spring-loaded spearguns, bows and arrows, bang sticks, or any similar taking device while utilizing SCUBA equipment.

(4) Possessing or using a seine, trammel, drift gill net, or any type of fixed net.

(5) Disturbing the benthic community by bottom trawling.

(b) There shall be a rebuttable presumption that any items listed in paragraph (a) of this section found in the possession of a person within the Sanctuary have been used, collected, or removed within or from the Sanctuary.

§ 922.105 Prohibited or otherwise regulated activities—Unit-specific.

In addition to the prohibitions set forth in § 922.103 and § 922.104, the following regulations apply to activities conducted within specified Sanctuary units described in the appendix to this subpart.

(a) The following activities are prohibited in the Fagatele Bay Unit:

(1) Harvesting, catching, removing, taking, injuring, destroying, collecting, moving, possessing or causing the loss of any Sanctuary resource, including but not limited to fishing, or attempting any of these activities.

(2) Possessing fishing gear unless such gear is stowed and not available for immediate use.

(b) The following activities are prohibited in the Aunu'u Unit:

(1) In Zone A: Fishing from a vessel without providing notification to the Sanctuary Superintendent or his/her designee in the village of Aunu'u prior to each fishing trip.

(2) In Zone B:

(i) Fishing for bottom-dwelling species or otherwise harvesting, catching, removing, taking, injuring, destroying, collecting, moving, or causing the loss of any bottom-dwelling species, or attempting any of these activities. Surface fishing for pelagic species, including trolling, is allowed.

(ii) Disturbing the benthic community.

(iii) Possessing any Sanctuary resource, except legally harvested fish on board a vessel.

(c) In the Muliāva Unit:

(1) The prohibitions in paragraphs (a)(2) through (7) and (a)(9) through (15) of § 922.103 do not apply to scientific exploration or research activities conducted by or for the Department of Commerce or the Department of the Interior.

(2) Notwithstanding the prohibition in § 922.103(a)(8), the following vessels may discharge treated waste from a U.S. Coast Guard approved Type I, II, or III Marine Sanitation device 12 nautical miles seaward of the Rose Atoll National Wildlife Refuge:

(i) Vessels engaged in scientific exploration or research activities conducted by or for the Department of Commerce or the Department of the Interior; or

(ii) All other vessels engaged in scientific exploration or research activities, if authorized under a permit issued in consultation with the U.S. Fish and Wildlife Service and in accordance with § 922.48 and § 922.107.

§ 922.106 Management and enforcement.

The National Oceanic and Atmospheric Administration (NOAA) has primary responsibility for the management of the Sanctuary pursuant to the Act. The American Samoa Department of Commerce (ASDOC) will assist NOAA in the administration of the Sanctuary, and act as the lead territorial agency, in conformance with the terms of designation, these regulations, and the terms and provisions of any grant or cooperative agreement.

§ 922.107 Permit procedures and criteria.

(a) Any person in possession of a valid permit issued by the Director, in consultation with the ASDOC, in accordance with this section and § 922.48, may conduct an activity otherwise prohibited by § 922.103, § 922.104, and § 922.105 in the Sanctuary if such activity is judged not to cause long-term or irreparable harm to the resources of the Sanctuary, and is:

(1) Related to research involving Sanctuary resources designed to enhance understanding of the Sanctuary environment or to improve resource management decisionmaking;

(2) Intended to further the educational value of the Sanctuary and thereby enhance understanding of the Sanctuary environmental or improve resource management decisionmaking;

(3) Intended to further the management of the Sanctuary; or

(4) For salvage or recovery operations.

(b) Permit applications shall be addressed to the Director, Office National Marine Sanctuaries; ATTN: Sanctuary Superintendent, American Samoa National Marine Sanctuary, P.O. Box 4318, Pago Pago, AS 96799.

(c) In considering whether to grant a permit, the Director shall evaluate such matters as:

(1) The general professional and financial responsibility of the applicant;

(2) The appropriateness of the methods being proposed for the purpose(s) of the activity;

(3) The extent to which the conduct of any permitted activity may diminish or enhance the value of the Sanctuary as a source of recreation, education, or scientific information; and

(4) The end value of the activity.

(d) In addition to meeting the criteria in this section and § 922.48, the applicant also must demonstrate to the Director that:

(1) The activity shall be conducted with adequate safeguards for the environment; and

(2) The environment shall be returned to, or will regenerate to, the condition which existed before the activity occurred.

(e) The Director may, at his or her discretion, grant a permit which has been applied for pursuant to this section, in whole or in part, and subject the permit to such condition(s) as he or she deems necessary.

Appendix to Subpart J of Part 922—American Samoa National Marine Sanctuary Boundary Coordinates

[Coordinates listed in this Appendix are unprojected (Geographic) and based on the North American Datum of 1983.]

(a) Fagatele Bay

No coordinates are needed in addition to those described in § 922.101(a).

(b) Fagalua/Fogama'a

No coordinates are needed in addition to those described in § 922.101(b).

(c) Aunu'u (Zones A, B)

The Aunu'u Unit is comprised of two adjacent zones, described in § 922.101(c), for which the point coordinates are provided in following tables 1 and 2.

TABLE 1—COORDINATES FOR THE AUNU'U UNIT, ZONE A

Point ID	Latitude (south)	Longitude (west)
1	14.286 S	170.577 W
2	14.304 S	170.577 W
3	14.302 S	170.566 W
4	14.286 S	170.533 W
5	14.286 S	170.546 W
6	14.286 S	170.562 W
7	14.286 S	170.577 W

TABLE 2—COORDINATES FOR THE AUNU'U UNIT, ZONE B

Point ID	Latitude (south)	Longitude (west)
1	14.270 S	170.496 W
2	14.286 S	170.496 W
3	14.286 S	170.546 W
4	14.280 S	170.550 W
5	14.270 S	170.550 W
6	14.270 S	170.551 W

(d) Swains Island

The Swains Island Unit boundary is defined by the coordinates provided in Table 3 and the textual description in § 922.101(d).

TABLE 3—COORDINATES FOR THE SWAINS ISLAND UNIT

Point ID	Latitude (south)	Longitude (west)
1	11.058639	171.08865
2	11.051669	171.089494
3	11.048561	171.092686
4	11.054867	171.094453
5	11.060239	171.092825
6	11.058639	171.08865
7	11.063967	171.075989
8	11.058622	171.068617
9	11.062167	171.066222
10	11.067414	171.073639
11	11.063967	171.075989

(e) Muliāva

The Muliāva Unit boundary is defined by the coordinates provided in Table 4 and the textual description in § 922.101(e).

TABLE 4—COORDINATES FOR THE MULIĀVA UNIT

Point ID	Latitude (south)	Longitude (west)
1	15.387 S	169.012 W
2	14.271 S	169.012 W
3	14.271 S	169.121 W
4	14.150 S	169.121 W
5	14.150 S	169.012 W
6	13.698 S	169.012 W
7	13.698 S	167.283 W
8	15.387 S	167.283 W
9	15.387 S	169.12

(f) Ta'u Unit

The Ta'u Unit boundary is defined by the coordinates provided in Table 5 and the textual description in § 922.101(f).

TABLE 5—COORDINATES FOR THE TA'U UNIT

Point ID	Latitude (south)	Longitude (west)
1	14.24889 S	169.503056 W
2	14.273056 S	169.488056 W
3	14.277222 S	169.488056 W
4	14.261111 S	169.429167 W
5	14.293889 S	169.429167 W
6	14.293889 S	169.519722 W
7	14.24889 S	169.519722 W
8	14.24889 S	169.503056 W

[FR Doc. 2012–17599 Filed 7–25–12; 8:45 am]

BILLING CODE 3510–NK–P

FEDERAL REGISTER

Vol. 77 Thursday,

No. 144 July 26, 2012

Part IV

Commodity Futures Trading Commission

17 CFR Part 15, 16, 17, *et al.*

Account Ownership and Control Report; Withdrawal; Ownership and Control Reports, Forms 102/102S, 40/40S, and 71; Proposed Rules

COMMODITY FUTURES TRADING COMMISSION

17 CFR Part 16

RIN 3038–AC63

Account Ownership and Control Report; Withdrawal

AGENCY: Commodity Futures Trading Commission (''Commission'').

ACTION: Proposed rule; withdrawal.

SUMMARY: On July 19, 2010, the Commission published for public comment a Notice of Proposed Rulemaking that proposed to collect certain account ownership and control information for all trading accounts active on U.S. futures exchanges and other reporting entities (''OCR NPRM''). After considering all comments received in response to the OCR NPRM, the Commission is withdrawing the OCR NPRM and instead pursuing the collection of account ownership and control information through a separate proposed rulemaking published today elsewhere in the notice section of the **Federal Register**.

DATES: Effective July 26, 2012, the proposed rule published July 19, 2010, at 75 FR 41775, is withdrawn.

FOR FURTHER INFORMATION CONTACT: Sebastian Pujol Schott, Associate Director, at 202–418–5641 or *sps@cftc.gov;* or Cody J. Alvarez, Attorney Advisor, at 202–418–5404 or *calvarez@cftc.gov;* Division of Market Oversight, Commodity Futures Trading Commission, Three Lafayette Centre, 1155 21st Street NW., Washington, DC 20581.

SUPPLEMENTARY INFORMATION: On July 19, 2010, the Commission published the OCR NPRM,[1] which provided for the collection of trading account information via an account ownership and control report (''OCR'').[2] In addition, the OCR NPRM sought public comment and provided for a public roundtable meeting during the 60-day comment period.[3] The staff-led public roundtable was held September 16, 2010.[4]

The Commission received eight comment letters from fourteen interested parties in response to the OCR NPRM and the public roundtable.[5] A number of commenters raised concerns regarding the costs they were likely to incur as a result of the OCR. For example, designated contract market group stated in its comment letter that ''the Commission's proposed OCR will result in very substantial capital and human resource costs being incurred by all [r]eporting [e]ntities on a one-time and on-going basis.''[6] Many commenters argued that certain OCR data points would be difficult to collect. For example, an industry association representing numerous large futures commission merchants (''FCMs'') stated that FCMs would have difficulty providing date of birth information because ''[a]n FCM generally does not record the date of birth of a customer or account controller.''[7] Many comment letters also included alternative recommendations for proceeding with the development of the OCR.[8]

In light of the comments received and the Commission's intention to collect trading account ownership and control information through a separate proposed rulemaking, the Commission has determined to withdraw the OCR NPRM. Concurrent with this withdrawal, the Commission is publishing elsewhere in this issue of the **Federal Register** a separate proposed rule that incorporates many of the OCR NPRM comments.

Issued in Washington, DC, on June 27, 2012 by the Commission.

David A. Stawick,

Secretary of the Commission.

[FR Doc. 2012–16178 Filed 7–25–12; 8:45 am]

BILLING CODE P

[1] 75 FR 41775 (July 19, 2010).

[2] On July 2, 2009, prior to the publication of the OCR NPRM, the Commission published an Advanced Notice of Proposed Rulemaking (''Advanced Notice''). In the Advanced Notice the Commission proposed to collect certain ownership, control, and related information for all trading accounts active on U.S. futures exchanges. *See* 74 FR 31642 (July 2, 2009).

[3] The comment period deadline was extended from September 17, 2010 to October 7, 2010 in order to give interested parties time to prepare comments on matters discussed at the roundtable meeting. *See* 75 FR 54801 (September 9, 2010).

[4] 75 FR 54802 (September 9, 2010).

[5] On December 23, 2010 and March 22, 2011, the Commission received supplemental comment letters from the Futures Industry Association (''FIA''). All OCR NPRM comment letters, supplemental comment letters, *ex parte* communications summaries, and a transcript of the public roundtable are available at: *http://comments.cftc.gov/PublicComments/CommentList.aspx?id=755.*

[6] CME Group Inc. comment letter on behalf of the Chicago Mercantile Exchange, Inc., the Board of Trade of the City of Chicago, Inc., the New York Mercantile Exchange, Inc., and the Commodity Exchange, Inc. (collectively ''CME'') dated October 7, 2010 at 3.

[7] FIA Comment Letter dated October 7, 2010 at 15.

[8] *See* CME Comment Letter dated October 7, 2010 at 4 and FIA Comment Letter dated October 7, 2010 at 7. *See* generally FIA Supplemental Comment Letter dated December 23, 2010 and FIA Supplemental Comment Letter dated March 22, 2011.

COMMODITY FUTURES TRADING COMMISSION

17 CFR Parts 15, 17, 18, and 20

RIN 3038–AD31

Ownership and Control Reports, Forms 102/102S, 40/40S, and 71

AGENCY: Commodity Futures Trading Commission.

ACTION: Notice of proposed rulemaking (''Notice'').

SUMMARY: The Commodity Futures Trading Commission (''Commission'' or ''CFTC'') is proposing new rules and related forms to enhance its identification of futures and swap market participants. The proposed rules would leverage the Commission's existing position and transaction reporting programs by requiring the electronic submission of trader identification and market participant data on amended Forms 102 and 40, and on new Form 71. The proposed rules also incorporate a revised approach to the Commission's previous initiative to collect ownership and control information, through a dedicated ownership and control report (''OCR''), for trading accounts active on reporting markets that are designated contract markets or swap execution facilities. The Commission welcomes public comment on all aspects of its proposal.

DATES: Comments must be received on or before September 24, 2012.

ADDRESSES: You may submit comments, identified by RIN number 3038–AD31, by any of the following methods:

- *Agency Web site, via its Comments Online process: http://comments.cftc.gov.* Follow the instructions for submitting comments through the Web site.
- *Mail:* David A. Stawick, Secretary of the Commission, Commodity Futures Trading Commission, Three Lafayette Centre, 1155 21st Street NW., Washington, DC 20581.
- *Courier:* Same as mail above.
- *Federal eRulemaking Portal: http://www.regulations.gov.* Follow the instructions for submitting comments.

Please submit your comments using only one method.

All comments must be submitted in English, or if not, accompanied by an English translation. Comments will be posted as received to *http://www.cftc.gov.* You should submit only information that you wish to make available publicly. If you wish the CFTC to consider information that you believe is exempt from disclosure under the Freedom of Information Act, a petition

for confidential treatment of the exempt information may be submitted according to the procedures established in § 145.9 of the CFTC's regulations.[1]

The CFTC reserves the right, but shall have no obligation, to review, pre-screen, filter, redact, refuse, or remove any or all of your submission from *http://www.cftc.gov* that it may deem to be inappropriate for publication, such as obscene language. All submissions that have been redacted or removed that contain comments on the merits of this Notice will be retained in the public comment file and will be considered as required under the Administrative Procedure Act and other applicable laws, and may be accessible under the Freedom of Information Act.

FOR FURTHER INFORMATION CONTACT:

Sebastian Pujol Schott, Associate Director, Division of Market Oversight (''DMO''), at 202–418–5641 or *sps@cftc.gov*; Cody J. Alvarez, Attorney Advisor, DMO, at 202–418–5404 or *calvarez@cftc.gov*; Mark Schlegel, Attorney Advisor, DMO, at 202–418–5055 or *mschlegel@cftc.gov*; or James Outen, Industry Economist, DMO, at 202–418–5710 or *jouten@cftc.gov*; Commodity Futures Trading Commission, Three Lafayette Centre, 1155 21st Street NW., Washington, DC 20581.

SUPPLEMENTARY INFORMATION:

I. Introduction
A. Background
B. Benefits Derived From the Proposed Rules
II. Statutory Framework for Position Reporting and Trader and Account Identification
III. Existing and Previously Proposed Trader and Account Identification Programs
A. Futures Large Trader Reporting—Existing Forms 102 and 40
i. Identification of Special Accounts—Existing Form 102
ii. Statement of Reporting Trader—Existing Form 40
B. Large Trader Reporting for Physical Commodity Swaps—102S and 40S Filings
C. Proposed OCR
i. OCR Advanced Notice
ii. OCR NPRM
iii. OCR NPRM Comment Summary
IV. Forms
A. Position Triggered 102
i. Special Accounts and Reportable Positions
ii. 102A Form Requirements
iii. Timing of 102A Reporting
iv. 102A Change Updates and Refresh Updates
B. Volume Triggered 102
i. 102B Form Requirements
ii. Timing of 102B Reporting
iii. 102B Change Updates and Refresh Updates
C. 102S
i. 102S Form Requirements
ii. 102S Change Updates and Refresh Updates
D. Form 71
E. New Form 40
V. Data Submission Standards and Procedures
VI. Review and Summary of Regulatory Changes To Implement New and Amended Forms
A. Part 15
B. Part 17
C. Part 18
D. Part 20
VII. Questions and Request for Comment
VIII. Related Matters
A. Cost Benefit Considerations
B. Regulatory Flexibility Analysis
C. Paperwork Reduction Act
i. Overview
ii. Information to be Provided
iii. Reporting and Recordkeeping Burdens
iv. Comments on Information Collection
Proposed Rules
Annex—Forms 102, 40 and 71

I. Introduction

A. Background

The CFTC's large trader reporting rules (also referred to herein as the ''reporting rules'') are contained in parts 15 through 21 of the Commission's regulations.[2] The reporting rules are currently structured to collect information with respect to positions in ''open contracts,''[3] including: (1) Information necessary to identify persons who hold or control ''reportable positions''[4] in open contracts (via existing Form 40); and (2) information necessary to identify ''special accounts''[5] (via existing Form 102). In this Notice, the Commission is proposing certain amendments to the existing reporting rules and forms as they pertain to positions in open contracts. In addition, the Commission is proposing a revised approach to the OCR, which previously had been proposed[6] as a separate data collection.[7] Specifically, the Commission proposes to expand the reporting rules and forms so that they may also be used to identify ''volume threshold accounts,'' defined as individual trading accounts that trigger volume-based reporting thresholds on a reporting market[8] that is a registered entity under §§ 1a(40)(A) or 1a(40)(D) of the Commodity Exchange Act (''CEA'' or ''Act'') (*i.e.,* a designated contract market (''DCM'') or a swap execution facility (''SEF'')), regardless of whether such activity results in reportable positions. Volume threshold accounts associated with DCMs and SEFs would be required to be reported by clearing members, as indicated in section IX below. The Commission notes that volume threshold accounts could reflect, without limitation, trading in futures, options on futures, swaps, and any other products traded on or subject to the rules of a DCM or SEF. However, the Commission also notes that the proposed rules generally reflect the Commission's knowledge and experience with trading practices and structures on DCMs. As a result, the Commission specifically requests public comment throughout this Notice on any revisions to the proposed rules that may be required to adequately address the identification and reporting of volume threshold accounts associated with SEFs.[9]

The proposed amendments to the reporting rules and forms would achieve three primary purposes. First, they would broaden the utility of existing Form 102 through a new, expanded Form 102 (''New Form 102''), partitioned into three sections: section 102A for the identification of position-based special accounts (''102A,'' ''Form 102A,'' or ''New Form 102A''); section 102B—the former OCR component—for the collection of ownership and control information from clearing members on volume threshold accounts associated with DCMs or SEFs (''102B,'' ''Form 102B,'' or ''New Form 102B'');[10] and section 102S for the submission of 102S filings for swap counterparty and customer consolidated accounts with

[1] 17 CFR 145.9.

[2] 17 CFR parts 15 through 21. The rule proposals contained in this Notice generally relate to parts 15, 17, 18 and 20 of the Commission's regulations.

[3] ''Open contract'' means any commodity or commodity option position ''held by any person on or subject to the rules of a board of trade which have not expired, been exercised, or offset.'' *See* §§ 1.3(t) and 15.00(n).

[4] A ''reportable position'' is defined in § 15.00(p) as ''any open contract position that at the close of the market on any business day equals or exceeds the [Commission's reporting levels specified in § 15.03].''

[5] A ''special account'' is defined in § 15.00(r) as ''any commodity futures or option account in which there is a reportable position.''

[6] *See* Commission, Notice of Proposed Rulemaking: Ownership and Control Report, 75 FR 41775 (July 19, 2010) (''OCR NPRM'').

[7] As discussed in further detail below, the Commission is withdrawing the OCR NPRM contemporaneously with the publication of this Notice in the **Federal Register**.

[8] ''Reporting market'' is defined in existing § 15.00(q) as ''a designated contract market, registered entity under § 1a(29) of the Act, and unless determined otherwise by the Commission [a derivatives transaction execution facility].'' By way of this Notice, the Commission proposes to revise § 15.00(q) to define reporting market as a ''designated contract market or a registered entity under § 1a(40) of the Act.'' This revision is technical in nature, and serves to conform § 15.00(q) with recent amendments to the Act. *See infra* sections VI(A) and IX.

[9] *See* section VII, below.

[10] As explained below, Form 102B incorporates the previously proposed OCR.

reportable positions (''102S,'' ''Form 102S,'' or ''102S filings''). Second, the proposed amendments would enhance the Commission's surveillance and large trader reporting programs for futures, options on futures, and swaps by clarifying which accounts are required to be reported on Form 102A; requiring the reporting on Form 102A of the trading accounts that comprise each special account; requiring the reporting of certain omnibus account information on Form 71 (''Form 71'' or ''New Form 71''); [11] updating Form 40 (''New Form 40''); and integrating the submission of 102S and 40S filings into the general Form 102 and Form 40 reporting program. Finally, the proposed amendments would provide for the electronic submission of Forms 102, 40, and 71.

B. Benefits Derived From the Proposed Rules

The proposed rules would enhance the Commission's existing trade practice and market surveillance programs for futures and options on futures, and facilitate surveillance programs for swaps, by expanding the information presently collected on existing Forms 102 and 40, and introducing a new information collection for omnibus volume threshold accounts in New Form 71. The rules would also help implement the 102S and 40S filing requirements recently adopted in connection with the Commission's part 20 rules addressing large trader reporting for physical commodity swaps (discussed below).[12] In the aggregate, the proposed rules would help the Commission to better deter and prevent market manipulation; deter and detect abusive or disruptive trading practices; and better perform risk-based monitoring and surveillance between related accounts. Ultimately, the proposed rules would significantly enhance the Commission's ability to identify participants in the derivatives markets and to understand relationships between trading accounts, special accounts, reportable positions, and market activity.

The proposed rules respond, in part, to the increased dispersion and opacity of trading in U.S. futures markets as they continue to transition from localized, open-outcry venues to global electronic platforms. While electronic trading has conferred important informational benefits upon regulators, the concomitant increases in trading volumes, products offered, and trader dispersion have created equally important regulatory challenges. Effective market surveillance now requires automated analysis and pattern and anomaly detection involving millions of daily trade records [13] and hundreds of thousands of position records [14] present in the surveillance data sets received daily by the Commission.[15]

Commission staff utilizes two distinct data platforms to conduct market surveillance: the Trade Surveillance System (''TSS'') and the Integrated Surveillance System (''ISS''). Broadly speaking, TSS captures transaction-level details of trade data, while ISS facilitates the storage, analysis, and mining of large trader data from a position perspective. One important component of TSS is the Trade Capture Report (''TCR''). Trade Capture Reports contain trade and related order data for every matched trade facilitated by an exchange, whether executed via open-outcry, electronically, or non-competitively. Among the data included in the TCR are trade date, product, contract month, trade time, price, quantity, trade type (*e.g.,* open outcry outright future, electronic outright option, give-up, spread, block, etc.), executing broker, clearing member, opposite broker and clearing member, customer type indicator, trading account numbers, and numerous other data points.

Effective market surveillance requires that surveillance data sets received by the Commission be sufficiently comprehensive and contain sufficient identified reference points to uncover relationships where none appear to exist and to analyze information based on flexible criteria. The collection of additional trader identification and market participant data on the forms proposed in this Notice would help the Commission to better satisfy these data requirements. For example, elements of the proposed data collection would enable the Commission to link ISS data (which includes large traders' names, but not their trading account numbers) to TSS data (which includes trading account numbers but not names).

The information proposed to be collected would also help the Commission to better identify and categorize individual trading accounts and market participants that triggered position or volume-based reporting thresholds. For example, New Form 102A would, among other changes, require reporting firms to identify the constituent trading accounts of each reported special account. In this manner, New Form 102A would ensure a new level of interoperability between the Commission's large trader data and its trade data, and would permit Commission surveillance staff to quickly reconstruct trading for any special account. New Form 102B would, for the first time, require identification of trading accounts based solely on their gross trading volume. This new information collection would enhance the Commission's trade practice surveillance program by revealing connections of ownership or control between trading accounts that otherwise appear unrelated in the TCR. More generally, it would facilitate Commission efforts to deter and detect attempted market disruptions that may occur even in the absence of large open positions. Finally, the automated collection of such information via electronic forms, rather than through ad-hoc, manual processes, would permit both the Commission and market participants to administer the reporting programs and related work more efficiently and effectively. Additional information on the forms addressed by this Notice is provided below.

II. Statutory Framework for Position Reporting and Trader and Account Identification

The Commission's existing reporting rules, and those proposed herein, are primarily implemented and/or proposed by the Commission pursuant to the authority of sections 4a, 4c(b), 4g, and 4i of the Act.[16] Section 4a of the Act

[11] As explained below, information regarding the owners and controllers of volume threshold accounts reported on Form 102B and that are identified as omnibus accounts (''omnibus volume threshold accounts'') would be collected by the Commission (via Form 71) directly from originating firms.

[12] *See* 17 CFR 20.5(a) and (b), the 102S and 40S filing requirements, discussed in greater detail below. Final part 20 was published in the **Federal Register** on July 22, 2011. *See* Commission, Large Trader Reporting for Physical Commodity Swaps, 76 FR 43851 (July 22, 2011) (''Large Trader Reporting for Physical Commodity Swaps'').

[13] For example, in November 2011, the Commission received an average of 7.4 million trade records per day from electronic trading on DCMs.

[14] For example, in November 2011, the Commission received an average of 617,000 position records per day from reporting firms and exchanges.

[15] Daily trade and position records are provided to the Commission pursuant to §§ 16.02 and 17.00, respectively. For further discussion of the Commission's large trader reporting program, see sections III(A) and (B), below.

[16] 7 U.S.C. 1 *et seq.* In addition, CEA § 8a(5) authorizes the Commission to promulgate such regulations as, in its judgment, are reasonably necessary to effectuate any provision of the Act or to accomplish any of the purposes of the Act. 7 U.S.C. 12a(5). Also, pursuant to the purposes enumerated in CEA § 3(b), the Act seeks to ensure the financial integrity of regulated transactions and to prevent price manipulation and other disruptions to market integrity. 7 U.S.C. 5(b).

permits the Commission to set and enforce speculative position limits, and to approve exchange-set position limits.[17] Section 4c(b) gives the Commission plenary authority to regulate transactions that involve commodity options.[18] Section 4g(a) of the Act requires, among other things, each futures commission merchant (''FCM''), introducing broker, floor broker, and floor trader to file such reports as the Commission may require on its proprietary and customer transactions and positions in commodities for future delivery on any board of trade in the United States or elsewhere.[19] In addition, section 4g(b) requires registered entities to maintain daily trading records as required by the Commission, and section 4g(c) requires floor brokers, introducing brokers, and FCMs to maintain their own daily trading records for each customer in such manner and form as to be identifiable with the daily trading records maintained by registered entities. Section 4g(d) permits the Commission to require that such daily trading records be made available to the Commission.[20] Lastly, section 4i of the Act requires the filing of such reports as the Commission may require when positions taken or obtained on designated contract markets equal or exceed Commission-set levels.[21] Collectively, these CEA provisions warrant the maintenance of an effective and rigorous system of market and financial surveillance.

In addition to the CEA sections described above, on July 21, 2010, President Obama signed the Dodd-Frank Wall Street Reform and Consumer Protection Act (''Dodd-Frank Act'').[22] Title VII of the Dodd-Frank Act[23] amended the CEA to establish a comprehensive new regulatory framework for swaps and security-based swaps. The legislation was enacted to reduce risk, increase transparency, and promote market integrity within the financial system by, among other things: (1) Providing for the registration and comprehensive regulation of swap dealers and major swap participants; (2) imposing clearing and trade execution requirements on standardized derivative products; (3) creating robust recordkeeping and real-time reporting regimes; and (4) enhancing the Commission's rulemaking and enforcement authority with respect to, among others, all registered entities and intermediaries subject to the Commission's oversight.

As part of the Commission's rulemaking program implementing the Dodd-Frank Act,[24] the rule changes proposed herein also include swaps-related considerations in connection with the Commission's new large trader reporting rules for swaps.[25] New CEA section 4t authorized the Commission to establish a large trader reporting system for significant price discovery function swaps; accordingly, the swaps-related considerations in the rules proposed herein also rely in part on the Commission's authority in CEA section 4t.

III. Existing and Previously Proposed Trader and Account Identification Programs

A. Futures Large Trader Reporting—Existing Forms 102 and 40

Existing § 17.00, in part 17 of the Commission's regulations, forms the basis of the Commission's large trader reporting program.[26] It requires each FCM, clearing member, and foreign broker to submit a daily report to the Commission for each commodity futures or option account it carries that has a reportable position (called a ''special account''). Such ''§ 17.00 position reports'' must show the futures and option positions of traders with positions at or above specific reporting levels set by the Commission. Current reporting position trigger levels are located in § 15.03(b).[27] The daily report is sent to the Commission as a single data file from each reporting FCM, clearing member, and foreign broker pursuant to technical specifications identified in § 17.00(g).[28] The Commission's surveillance staff uses this report to, among other things, assess individual traders' activities and potential market power; enforce speculative position limits; monitor for disruptions to market integrity; and calculate statistics that the Commission publishes to enhance market transparency (*e.g.,* in the Commitments of Traders reports).

i. Identification of Special Accounts—Existing Form 102

For each special account identified by an FCM, clearing member, or foreign broker and reported to the Commission in a § 17.00 position report, existing § 17.01[29] requires the FCM, clearing member, or foreign broker to separately identify such special accounts to the Commission on Form 102 and provide certain information with respect to each special account.[30] Pursuant to existing § 17.02(b),[31] Form 102 must be submitted by such parties within three days of an account becoming a special account; a Form 102 submission may also be required by the Commission or its designee via a special call. The text of existing § 17.01[32] includes both the requirement to submit the form as well as the specific data fields that are required to be completed on Form 102. Currently, Form 102 requires the filing of a separate ''paper'' form for each special account. Forms are generally transmitted to the Commission via email, facsimile, or regular mail.

As noted above, Form 102 identifies and provides information with respect to special accounts carried by FCMs, clearing members, and foreign brokers. The form provides the Commission with contact information for the trader(s) who owns and/or controls trading in each special account included in the daily § 17.00 position reports. The Form 102 questions, as currently detailed in § 17.01(a) through (f),[33] require the reporting firm to provide the following: a special account number; the name, address, and other identification information for the owner (if also the controller), controller, or originator (if an omnibus account) of the account; an indication whether trades and positions in the special account are usually associated with commercial activity of the account owner in a related cash commodity or activity; information regarding an FCM's relationship to the account; and name and address information for the firm submitting the Form 102.

Based on the Commission's experience in receiving, processing, and reviewing Form 102 submissions, and as discussed below in the context of the rules proposed herein, the Commission

[17] 7 U.S.C. 6a.

[18] 7 U.S.C. 6c(b).

[19] 7 U.S.C. 6g(a).

[20] *See supra* section I(B) for a discussion of the trade data transmitted daily to the Commission by registered entities.

[21] 7 U.S.C. 6i.

[22] *See* Dodd-Frank Wall Street Reform and Consumer Protection Act, Public Law 111–203, 124 Stat. 1376 (2010). The text of the Dodd-Frank Act may be accessed at *http://www.cftc.gov./LawRegulation/OTCDERIVATIVES/index.htm.*

[23] Pursuant to § 701 of the Dodd-Frank Act, Title VII may be cited as the ''Wall Street Transparency and Accountability Act of 2010.''

[24] *See generally, http://www.cftc.gov/LawRegulation/DoddFrankAct/index.htm.*

[25] As noted *supra* in note 12, 17 CFR 20.5(a) and (b) contain the 102S and 40S filing requirements, discussed in greater detail below. Final part 20 was published in the **Federal Register** on July 22, 2011. *See supra* note 12.

[26] 17 CFR 17.00.

[27] 17 CFR 15.03(b).

[28] 17 CFR 17.00(g).

[29] 17 CFR 17.01.

[30] Current Form 102 is titled *Identification of Special Accounts.* 17 CFR 15.02.

[31] 17 CFR 17.02(b).

[32] 17 CFR 17.01.

[33] 17 CFR 17.01(a) through (f).

has determined that the existing Form 102 questions would benefit from revisions designed to: (1) Provide more meaningful information to the Commission and (2) clarify for reporting firms the traders, accounts, and information required to be provided on Form 102. In addition, the Commission is also proposing (as discussed below) that the New Form 102 submission process be modernized to facilitate electronic submission so that both the Commission and market participants may benefit from the efficiencies of automation.

ii. Statement of Reporting Trader—Existing Form 40

For each trader holding or controlling a reportable position (generally, persons identified on Form 102), § 18.04 requires that, after a special call of the Commission, such trader file with the Commission a ''Statement of Reporting Trader'' on existing Form 40 at such time and place as directed in the call.[34] The Form 40 is most commonly submitted to the Commission via paper submission, email submission, or facsimile. When submitted in a timely and accurate manner, Form 40 submissions provide the Commission with basic information about each reportable trader in its markets.

As with existing § 17.01 and Form 102, existing § 18.04 also specifically identifies the data fields required in a Form 40 filing. Generally, § 18.04 and Form 40 require every reporting trader to provide or indicate the following: Name and address; principal business and occupation; type of trader; registration status with the Commission; name and address of other persons whose trading the trader controls; name, address, and phone number for each controller of the reporting trader's trading; name and location of other reporting firms through which the reporting trader has accounts; name and locations of persons guaranteeing the trading accounts of the reporting trader or persons having a 10 percent or greater financial interest in the reporting trader or its accounts; other identification information regarding accounts which the reporting trader guarantees or in which the reporting trader has a financial interest of 10 percent or more; and whether the reporting trader has certain relationships with or owners that are foreign governments.

Individuals completing existing Form 40 must also provide or indicate the following, as applicable: A business telephone number; employer and job title; description of trading activity related to physical activity in or commercial use of a commodity; name and address of any organization of which the reporting trader participates in the management, if such organization holds a trading account; the name and address of a partner and/or joint tenant on the account; and the name and address of the partner and/or joint tenant that places orders.

Corporations and other non-individuals/non-partnerships/non-joint tenants completing existing Form 40 must also provide or indicate the following, as applicable: A U.S. entity indication, and if not a U.S. entity, an indication of where organized; names and locations of parent firms and their respective U.S. entity indication; names and locations of all subsidiary firms that trade in commodity futures and options and their respective U.S. entity indication; name and address of person(s) controlling trading, by commodity and transaction type; contact information for a contact person regarding trading; and description of trading activity related to physical activity in, or the commercial use of, a commodity.

As with Form 102, and based on the Commission's experience in calling for, receiving, processing, and reviewing Form 40 submissions, the Commission has determined that the existing Form 40 questions could benefit from revisions designed to: (1) Provide more meaningful information to the Commission and (2) clarify for reporting traders the specific information required to be provided on Form 40. In addition, the Commission is also proposing, as discussed below, that the New Form 40 submission process be modernized to facilitate Web-based electronic form submission and achieve the efficiencies (for both the Commission and market participants) associated with using a single Web-based submission format.

B. Large Trader Reporting for Physical Commodity Swaps—102S and 40S Filings

As noted above, the Commission recently adopted rules pertaining to swaps large trader reporting as new part 20 of the Commission's regulations.[35] In addition to establishing a position-based reporting scheme for swaps,[36] the rules also require two trader identification filings—102S and 40S. For swap counterparties with reportable positions (as set forth in part 20), the 102S and 40S filings generally serve an analogous function to that served by the existing Form 102 and Form 40 for futures and option traders.

Specifically, pursuant to § 20.5(a), 102S filings must be filed by a part 20 reporting entity (a clearing firm or a swap dealer) for each reportable counterparty consolidated account and ''shall consist of the name, address, and contact information of the counterparty and a brief description of the nature of such person's paired swaps and swaptions market activity.'' [37] In addition, pursuant to § 20.5(b), and in conjunction with § 20.6, all clearing organizations, swap dealers, clearing members, and counterparties with reportable positions must, after a special call of the Commission, complete a Form 40 ''as if any references to futures or options contracts were references to paired swaps or swaptions as defined in § 20.1'' and submit the same to the Commission as a 40S filing.[38]

Building on the approach of this Notice to modernizing Form 102 and Form 40 submissions, the rules proposed herein would also provide for the electronic submission of both 102S and 40S filings. In order to provide clarity for market participants submitting these filings, the proposed rules also include provisions indicating the specific information required to be provided in each of these filings. In addition, the information requested in proposed Form 102S reflects considerations developed in the Swaps Large Trader Guidebook for compliance with part 20.[39] For example, in addition to requiring information on counterparty consolidated accounts, as described above, proposed 102S would also collect information on ''customer'' consolidated accounts.[40] Form 102S would also ask reporting firms to distinguish between ''house'' and ''customer'' consolidated accounts.

C. Proposed OCR

In addition to existing trader and account identification filings summarized above, the Commission recently proposed to collect ownership

[34] 17 CFR 18.04.

[35] *See supra* note 12.

[36] *See generally:* Large Trader Reporting for Physical Commodity Swaps: Division of Market Oversight Guidebook for part 20 Reports, available at: *http://www.cftc.gov/ucm/groups/public/@newsroom/documents/file/ltrguidebook120711.pdf* (hereafter, ''Swaps Large Trader Guidebook'').

[37] 17 CFR 20.5(a).

[38] 17 CFR 20.5(b) and 20.6.

[39] *See supra* note 36.

[40] As explained in the Swaps Large Trader Guidebook, acceptable part 20 data records include ''customer,'' ''agent,'' ''principal,'' and ''counterparty'' records. Clearing firms and swap dealers submitting 102S filings would be expected to classify principal and counterparty consolidated accounts as counterparty accounts on Form 102S, and to classify customer consolidated accounts as customer accounts. Agent data records would not require a 102S filing.

and control information for all trading accounts active on U.S. futures exchanges and other trading venues. The Commission proposed to collect such information via an account ownership and control report (''OCR'') submitted periodically by reporting entities that would primarily be DCMs. The Commission published an Advanced Notice of Proposed Rulemaking (''OCR Advanced Notice'' or ''Advanced Notice'')[41] soliciting public comment on the OCR in 2009, and a Notice of Proposed Rulemaking (''OCR NPRM'') in 2010.[42] Both notices are described in greater detail below.

i. OCR Advanced Notice

In the OCR Advanced Notice, the Commission sought public comment on the concept of an OCR submitted periodically to the Commission by DCMs and other trading-venue reporting entities.[43] As the Commission explained in the Advanced Notice, the OCR was designed to enhance market transparency, leverage the Commission's existing surveillance systems, and foster synergies between its market surveillance, trade practice, enforcement, and economic research programs. The OCR Advanced Notice provided a detailed explanation of the Commission's need and intended uses for ownership and control information. The Commission invited all interested parties to submit general comments regarding the Advanced Notice within a 45-day comment window. The Commission received a total of twelve comment letters from sixteen interested parties.

ii. OCR NPRM

After carefully considering comments received in response to the OCR Advanced Notice, the Commission published its OCR NPRM, which was substantively similar to the Advanced Notice. Like the Advanced Notice, the OCR NPRM also provided for the collection of information through an OCR submitted to the Commission by trading-venue reporting entities.[44] For each trading account, reporting entities were to collect and transmit specific OCR data points, including: the trading account number; the names and addresses of the account's owners and controllers; the owners' and controllers' date of birth; the special account number, if one had been assigned; an indication of whether the account was a reportable account pursuant to large trader thresholds; and other relevant information. The Commission understood that, to compile their OCRs, reporting entities would need to collect information from FCMs and introducing brokers (''IBs'') in possession of the underlying data required by the OCR. Consequently, much of the OCR's burden would have fallen on FCMs, IBs, and any other market participants providing data to the reporting entities. The OCR NPRM also proposed the form, manner, and frequency of OCR transmission by reporting entities.[45]

The OCR NPRM sought public comment and provided for a 60-day comment period. Commission staff also led a public roundtable to facilitate in-person discussion between Commission staff and interested parties.[46] The staff-led public roundtable was held on September 16, 2010, and consisted of fifteen panelists.[47] By the close of the OCR NPRM comment period, the Commission received eight comment letters from fourteen interested parties.[48] Many of the comments presented by roundtable panelists raised the same issues as those raised by the comment letters responding to the Advanced Notice and the OCR NPRM.

iii. OCR NPRM Comment Summary

A number of commenters found merit in the proposed OCR. For example, IntercontinentalExchange, ICE Futures Europe, and ICE Futures U.S. collectively stated that they ''recognize[d] the value in collecting information regarding the identity of the owners and controllers of accounts that actively trade on reporting entities, and therefore suppor[t] the Commission's initiative to collect certain OCR information.''[49] Similarly, the Futures Industry Association (''FIA'') commented that it ''supports the underlying purposes of the proposed OCR.''[50] The Air Transport Association of America (''ATA'') ''agree[d] that the proposed [OCR] will provide information the Commission needs to ensure that the U.S. futures markets accurately reflect supply and demand forces for products traded, and to ensure that the futures markets are not tainted by fraud, abuse or excessive speculation.''[51] The ATA further stated that, ''the OCR is critical to the Commission's ability to fulfill these responsibilities in a dynamic and evolving marketplace that has embraced new technologies.''[52] Finally, the Kansas City Board of Trade commented that ''Exchange Compliance staffs will benefit greatly from the wealth of information at their disposal regarding the identity of market participants and the relationships that exist among them.''[53]

Commenters also suggested possible modifications to the OCR as described in the OCR NPRM. Commenters recommended that the Commission utilize an updated and automated Form

[41] *See* Commission, Advanced Notice of Proposed Rulemaking: Ownership and Control Report, 74 FR 31642 (July 2, 2009).

[42] *See* OCR NPRM *supra* note 6.

[43] The OCR Advanced Notice noted that ''most reporting entities will be designated contract markets, but they could be any registered entity that provides trade data to the Commission on a regular basis.'' *See* OCR Advanced Notice *supra* note 41 at 31642.

[44] The OCR NPRM provided that reporting entities would include DCMs, derivatives transaction execution facilities, and exempt commercial markets with significant price discovery contracts. In addition, the OCR NPRM provided that should the Commission adopt the proposed rule, it would also collect ownership and control information from foreign boards of trade operating in the U.S. pursuant to staff direct access no-action letters, if such letters are conditioned on the regular reporting of trade data to the Commission. In the OCR NPRM, the Commission also noted that if given appropriate authority it would consider collecting OCR data for over-the-counter and exchange-traded swap transactions. *See* OCR NPRM *supra* note 6 at 41782.

[45] The OCR NPRM provided that the OCR be submitted weekly, in Financial Information eXchange Markup Language (''FIXML'') via secure file transfer protocol (''SFTP''). *See* OCR NPRM *supra* note 6 at 41784.

[46] The comment period deadline was extended from September 17, 2010 to October 7, 2010 in order to give interested parties time to prepare comments on matters discussed at the public roundtable. *See* 75 FR 54801 (September 9, 2010).

[47] Panelists included representatives from: CME Group Inc.; ICE Futures U.S.; Kansas City Board of Trade; Katten Muchin Rosenman LLP; Millburn Ridgefield Corporation; National Introducing Brokers Association; NYSE Liffe U.S.; State Street Global Markets; Woodfield Fund Administration LLC; and an industry consultant.

[48] All OCR NPRM comment letters (''CL''), supplemental comment letters (''supplemental CL''), *ex parte* communications summaries, and a transcript of the public roundtable are available through the Commission's Web site at: *http://comments.cftc.gov/PublicComments/CommentList.aspx?id=755.* OCR NPRM comment letters were received from: (1) Air Transport Association of America, Inc. on September 17, 2010 (''CL–ATA''); (2) CME Group Inc. on behalf of the Chicago Mercantile Exchange, Inc.; the Board of Trade of the City of Chicago, Inc.; the New York Mercantile Exchange, Inc.; and the Commodity Exchange, Inc. (collectively ''CME'') on October 7, 2010 (''CL–CME''); (3) Darrell Cutshaw on September 13, 2010 (''CL–DCT''); (4) Futures Industry Association on October 7, 2010 (''CL–FIA''); (5) IntercontinentalExchange, Inc., ICE Futures Europe, and ICE Futures U.S., Inc. (collectively, ''ICE'') on October 7, 2010 (''CL–ICE''); (6) International Assets Holding Corporation and FCStone, LLC on October 7, 2010 (''CL–FCS''); (7) Kansas City Board of Trade on October 7, 2010 (''CL–KCBT''); and (8) OneChicago, LLC on September 27, 2010 (''CL–OCX''). OCR NPRM supplemental comment letters were received from: (1) FIA on December 23, 2010 (''Supplemental CL–FIA I''); and (2) FIA on March 22, 2011 (''Supplemental CL–FIA II'').

[49] CL–ICE *supra* note 48 at 1.

[50] CL–FIA *supra* note 48 at 2.

[51] CL–ATA *supra* note 48 at 1.

[52] *Id.*

[53] CL–KCBT *supra* note 48 at 1.

102 to collect OCR data[54]; collaborate with industry representatives to design the OCR[55]; require the reporting of only those accounts that exceed certain volume thresholds[56]; and require that the Commission receive OCRs directly from clearing FCMs rather than from DCMs and other trading venues.[57] In a series of supplemental comment letters, the FIA (working with a group of FCMs, U.S. exchanges and other experts (''Working Group'')) provided a ''Proposed OCR Alternative'' that expanded upon comments made by FIA and its members in response to the Advanced Notice, the OCR NPRM, and the public roundtable.[58] The Working Group's Proposed OCR Alternative addressed, among other things, the OCR data points to be collected, the sources and flow of OCR data, and industry costs arising from the Commission's proposed OCR versus the costs associated with the Working Group's Proposed OCR Alternative.[59] Specifically, the Working Group estimated that the Proposed OCR Alternative ''would result in an average first-year cost saving of approximately $18.8 million'' when compared with the Commission's proposed OCR.[60] The Commission found merit in many of the commenters' recommendations and has incorporated several of these recommendations in the proposed rules. For example, as further described below, the proposed rules would require OCR data submissions directly from clearing FCMs, and OCR data would only be required for those trading accounts that exceed a specified volume threshold. Also, in concurrence with the suggestions of commenters and as more fully described below, the Commission anticipates collaborating with reporting entities and other interested participants to develop the data format and submission process.

Concurrent with the publication of this Notice, the Commission is issuing a separate notice that serves to formally withdraw the OCR NPRM and to alert the public to the rulemaking proposed herein.

[54] *See* CL–CME *supra* note 48 at 6, CL–OCX *supra* note 49 at 2, and Supplemental CL–FIA I *supra* note 49 at 2 of Appendix A.

[55] *See* CL–CME *supra* note 48 at 5, CL–FIA *supra* note 49 at 8, CL–ICE *supra* note 49 at 2, and CL–KCBT *supra* note 49 at 4.

[56] *See* CL–ICE *supra* note 48 at 4, CL–FIA *supra* note 49 at 7, and Supplemental CL–FIA I *supra* note 49 at 2 of Appendix A.

[57] *See* CL–KCBT *supra* note 48 at 2.

[58] *See* generally Supplemental CL–FIA I *supra* note 48 and Supplemental CL–FIA II *supra* note 48.

[59] *Id.*

[60] Supplemental CL–FIA I *supra* note 48 at 5 of Appendix A.

IV. Forms

As noted above, this proposed rulemaking addresses three forms—New Form 102, New Form 71, and New Form 40. New Form 102 is proposed as a multi-function form, since the requirement to submit New Form 102 can arise from one of three separate triggers. The data required to be submitted on a New Form 102 is determined by the underlying triggering mechanism. A discussion of the three New Form 102 triggering mechanisms, the related sections of the form, and the information required to be provided in each section, follows. New Form 71 is proposed as a tool to be used, at the Commission's discretion, to learn more about certain volume threshold accounts identified as omnibus accounts on New Form 102B. New Form 40 would continue to serve its traditional purpose as a tool to be used, at the Commission's discretion, to learn more about traders and market participants identified on New Form 102, as well as on New Form 71. New Form 71 and New Form 40 are also described in detail below.

A. Position Triggered 102

i. Special Accounts and Reportable Positions

New Form 102A is the section of New Form 102 that would serve a function most analogous to existing Form 102. New Form 102A requires an FCM, clearing member, or foreign broker to identify and report its special accounts. As discussed above, a special account is defined in existing § 15.00(r), and means any commodity futures or option account in which there is a reportable position.[61] For the purposes of part 17, reportable position is defined in existing § 15.00(p)(1), and generally includes any open contract position that at the close of the market on any given business day equals or exceeds the levels in existing § 15.03.[62] These proposed rules would not amend the definition of either special account or reportable position. The Commission notes that under existing regulations (*e.g.,* § 17.00(b), citing § 150.4),[63] reporting firms are required to separately aggregate the positions of common owners and those of common controllers for the purpose of identifying special accounts on a Form 102. By way of this proposed rulemaking, the Commission reiterates that its regulations require reporting firms to separately aggregate positions by common ownership and by common control for the purpose of identifying and reporting special accounts.

ii. 102A Form Requirements

As compared to existing Form 102, the data fields in 102A would include new ownership and control information fields (or, in the case of special accounts that are omnibus accounts, omnibus account originator information fields) for position-based special accounts. Form 102A, as proposed, would also require reporting firms that are clearing members to identify the trading accounts that comprise a position-based special account and to provide ownership and control information, as well as TCR trading account numbers, for those trading accounts.[64] To clarify, ''trading accounts that comprise a position-based special account'' would include all of those trading accounts that: (1) Are used to execute trades cleared by the clearing member submitting the 102A; (2) are owned or controlled by the entity identified as owning or controlling the special account reported on a 102A; and (3) execute transactions in the same commodity or commodities in which the special account has a reportable position. The Commission's objective in requiring reporting firms that are clearing members to identify the trading accounts that comprise a special account is to facilitate trade-level monitoring of the means by which special account owners or controllers establish and unwind their reportable positions. The Commission specifically requests comment on this definition of ''trading accounts that comprise the special account.'' The Commission welcomes proposals for alternative definitions that would still permit it to achieve the objective identified above. The Commission also requests public comment regarding whether Form 102S filings, discussed below, should require the identification of trading accounts that comprise a consolidated account in the same manner that Form 102A would require the identification of trading accounts that comprise a special account.

The Commission notes that the requirement in 102A to identify a trading account number for trading

[61] 17 CFR 15.00(r).

[62] 17 CFR 15.00(p)(1) and 15.03.

[63] 17 CFR 17.00(b) and 150.4. In this regard, the Commission notes that upon the compliance date for part 151 of the Commission's regulations, the aggregation rules in § 150.4 will be superseded by those in § 151.7. The compliance date for part 151 is 60 days after the term ''swap'' is further defined pursuant to § 721 of the Dodd-Frank Act (*i.e.,* 60 days after the further definition of ''swap'' as adopted by the Commission and the Securities Exchange Commission is published in the **Federal Register**). *See* Commission, Position Limits for Futures and Swaps, 76 FR 71626, 71632 (November 18, 2011).

[64] *See supra* section I(B).

accounts that comprise a special account would only be a relevant/applicable data field for clearing members identifying trading accounts that comprise a special account. Based on comments received in response to the OCR NPRM, it is the Commission's understanding that non-clearing FCMs, foreign brokers, and omnibus account originators (collectively, ''non-clearing entities'') would generally not have the ability to match/identify a trading account number for their customers or sub-accounts (hereafter, ''sub-accounts'') on the TCR.[65]

Notwithstanding these limitations, under this proposed rulemaking non-clearing entities would continue to be required to submit a 102A for their customers/sub-accounts that, if carried directly with a clearing member, would otherwise be required to be reported as a position-based special account. Existing Form 102 requires the reporting of such special accounts, and New Form 102A would not change that requirement.

Form 102A would also require reporting firms to indicate whether a special account reported based on ownership or control of a reportable position is a house or customer account of the reporting firm. This indicator would allow the Commission to perform certain financial risk surveillance functions in a more automated and efficient manner by quickly identifying house positions that potentially create risk for the reporting firm. Form 102A also requires that reporting firms indicate whether any trading account identified on 102A has been granted direct market access (''DMA'') to the trade matching system of the relevant reporting market. The proposed definition of ''DMA'' appears in section IX below. Finally, 102A requires any reporting firm that indicates on 102A that it is a foreign broker to identify its U.S. FCM.

iii. Timing of 102A Reporting

Pursuant to the proposed regulatory revisions discussed below, this rulemaking would require 102A submissions no later than the submission of the corresponding § 17.00(a) position report for a special account. That is, the 102A for any particular special account would be due at the same time as the special account's reportable position is first sent to the Commission. The proposed rule text also includes an ''on-call'' provision, which would require a 102A to be submitted on such other date as directed by special call of the Commission.

iv. 102A Change Updates and Refresh Updates

The proposed rules provide that if any change causes the information filed on a 102A for a special account to no longer be accurate, that an updated 102A shall be filed with the Commission no later than 9:00 a.m. eastern time on the business day after such change occurs, or on such other date as directed by special call of the Commission (''change updates'').

In addition to change updates, proposed § 17.02(b) requires that, starting on a date specified by the Commission or its designee and at the end of each six month increment thereafter (or such later date specified by the Commission or its designee), each FCM, clearing member, or foreign broker resubmit every 102A that it has submitted to the Commission for each of its special accounts (''refresh updates''). As with the 102B, discussed below, the goal of the refresh update provision is to establish discreet points in time where all 102A data is considered accurate and reliable. The Commission is proposing the refresh update provision in an effort to maintain accurate 102A data, and to avoid the data drift which is often associated with long-term data collection efforts.

Both the change update and refresh update provisions of § 17.02(b) include the following sunset provision: an FCM, clearing member, or foreign broker may stop providing change updates or refresh updates for a Form 102A that it has submitted to the Commission for any special account upon notifying the Commission that the account in question is no longer reportable as a special account.

B. Volume Triggered 102

New Form 102B of New Form 102 provides a new volume-based reporting structure not found in existing 102. As background, the Commission received several comments in response to the OCR NPRM that suggested the Commission should only require the reporting of those trading accounts whose trading activity exceeded a volume threshold, thereby limiting the total number of reportable accounts, reducing reporting costs, and preventing the reporting of non-significant accounts. The Commission considered the comments it received regarding the establishment of volume thresholds for the OCR, and has modified its approach accordingly in this Notice. While existing Form 102 reporting requirements arise when an account (or collection of related accounts) has a reportable position, 102B reporting is triggered when an individual trading account meets a specified trading volume level in an individual product and, as a result, becomes a ''volume threshold account.'' Volume threshold accounts, as defined below in proposed § 15.00(y), are trading accounts that execute, or receive via allocation or give-up, reportable trading volume on or subject to the rules of a reporting market, that is a DCM or an SEF.[66] The reportable trading volume level (''RTVL'') is defined in proposed § 15.04 as 50 or more contracts in all instruments that a DCM or SEF designates with the same product identifier (including purchases and sales, and inclusive of all expiration months).[67] As noted above, volume threshold accounts could reflect, without limitation, trading in futures, options on futures, swaps, and any other product traded on or subject to the rules of a DCM or SEF. The Commission requests public comment as to whether any final rule adopted by the Commission should raise, lower or maintain the proposed RTVL. The Commission also requests public comment regarding the suitability of the proposed RTVL, as defined in proposed § 15.04, to volume threshold accounts associated with SEFs, and whether any changes are required to make the proposed RTVL suitable for volume threshold accounts associated with SEFs. Additional requests for public

[65] *See supra* section I(B) for a discussion of the TCR.

[66] *See supra* section I(A) for an explanation of the reporting markets relevant to 102B filings, and *infra* sections VI(A) and IX and note 82 for proposed amendments to the definition of ''reporting market.''

[67] The proposed RTVL is based on the Commission's analysis of DCM trade data received through the TCR from a sample of DCMs during a recent six month period. It is calibrated to yield information with respect to those trading accounts that are responsible for a substantial majority of trading volume, while minimizing the proposed regulations' impact on low-volume accounts whose trading activity does not warrant inclusion in the proposed reporting and identification regime. Based on the sample data set used in the Commission's analysis, the proposed RTVL would result in the reporting and identification of approximately one-third of the trading accounts reported in the sample data set. However, due to the concentration of trading activity among a minority of accounts and some accounts' tendency to be active in more than one product, the proposed RTVL would nonetheless result in the identification of at least 85% of the trading volume in approximately 90% of the products in the sample data set, as measured at the conclusion of the six-month period sampled by the Commission. The Commission notes that any amendments it may make to the RTVL as it pertains to SEFs may be designed to ensure that the RTVL for SEFs achieves a similar level of identification as the RTVL for DCMs, *i.e.,* identifying a substantial majority of the volume in a substantial majority of products while minimizing the impact on SEF accounts whose trading activity is too low to merit inclusion in the reporting and identification regime.

comment with respect to the RTVL as currently proposed are in section VII, below.

i. 102B Form Requirements

As a threshold question, 102B requires that clearing members provide, in response to question 2, the trading account number of any trading account that meets the criteria for a volume threshold account; any related short code(s) for such account; and the name of the reporting market (i.e., the DCM or SEF) at which the volume threshold account had reportable trading volume. These data points are necessary to report and identify volume threshold accounts in TCRs received from DCMs or similar transaction-based reports that may be received by the Commission from SEFs, and to link the volume threshold account to transaction records in the Commission's surveillance databases.[68] The data points will also assist the Commission in fulfilling its surveillance responsibilities.

Second, and as with 102A, 102B requires that clearing members indicate, in response to question 3, whether the volume threshold account has been granted DMA to the trade matching system of the relevant reporting market.

Third, 102B requires that clearing members provide, in response to question 4, the volume threshold account's associated special account number, if applicable. In the case of DCMs, this information will permit the Commission to more effectively and efficiently connect position data received via the large trader reporting system and trade data received via the TCR.

Fourth, 102B requires that clearing members indicate, in response to question 5, whether the volume threshold account is an omnibus account, or used to execute trades for an omnibus account. If the account is an omnibus account or used to execute trades for an omnibus account, question 5 requires clearing members to indicate whether the account is a house or customer omnibus account, and to provide information sufficient to uniquely identify and contact the originator of the account (*e.g.,* the originator's name, address and phone number, among other information). More detailed information regarding ownership and control with respect to a volume threshold account that is a customer omnibus account will be collected separately at the Commission's request, from the omnibus account's originating firm, via a New Form 71, also proposed in this Notice and described below.

Fifth, 102B requires clearing members to provide information, in response to question 6, sufficient to uniquely identify and contact each owner of a volume threshold account that is not an omnibus account (*e.g.,* the owner's name, address and phone number, among other information). For each account owner that is not a natural person, question 6 also requests, among other identifying information, a contact name, contact job title, and the relationship of the contact to the account owner.

Finally, the Commission requests that clearing members provide information, in response to question 7, sufficient to uniquely identify and contact each volume threshold account controller of an account that is not an omnibus account. Pursuant to proposed § 15.00(dd), a volume threshold account controller must be a natural person. The requested information includes the account controller's name, address, phone number and job title, together with the name of the controller's employer and other identifying information.

The Commission requests public comment regarding the suitability of Form 102B to volume threshold accounts associated with SEFs. The Commission also requests comment regarding how Form 102B should be amended, if at all, to heighten its suitability with respect to SEFs.

ii. Timing of 102B Reporting

In order to identify its volume threshold accounts and make a timely submission of 102B, a clearing firm must tabulate the gross trading activity of each account on its books. Once a volume threshold account is identified, proposed § 17.02(c) requires that the clearing firm submit 102B to the Commission no later than 9:00 a.m. eastern time on the business day following the day on which the account in question became a volume threshold account.[69]

iii. 102B Change Updates and Refresh Updates

Once a clearing firm has identified a volume threshold account on 102B, that clearing firm has an ongoing responsibility (under § 17.02(c)) to ensure the information reported on 102B remains accurate. If the clearing firm becomes aware of any changes that cause the information reported on 102B to no longer be accurate, then an updated 102B must be filed no later than 9:00 a.m. on the business day after the clearing firm becomes aware of such change (''change updates'').

In addition to change updates, proposed § 17.02(c) requires that, starting on a date specified by the Commission or its designee and at the end of each six month increment thereafter (or such later date specified by the Commission or its designee), each clearing member shall resubmit every Form 102B that it has submitted to the Commission for each of its volume threshold accounts (''refresh updates''). As with Form 102A, the Commission is proposing the refresh update provision in § 17.02(c) in an effort to maintain accurate 102B data and avoid the data drift which is often associated with long-term data collection efforts. The goal of the refresh update provision is to establish discrete points in time where all 102B data is considered accurate and reliable.

Both the change update and refresh update provisions of § 17.02(c) include the following sunset provision: If, during the course of a six-month period, the subject volume threshold account executes no trades in any product on the reporting market at which the volume threshold account reached the reportable trading volume level, then the relevant clearing firm is no longer required to provide either change updates or refresh updates following the end of this six-month period.

C. 102S

i. 102S Form Requirements

Section 102S of New Form 102 is proposed to formalize and facilitate the electronic submission of 102S filings as required in 17 CFR 20.5(a). As noted above, pursuant to § 20.5(a), 102S filings must be filed by a part 20 reporting entity (a clearing firm or a swap dealer) for each reportable counterparty consolidated account when such account first becomes reportable, and ''shall consist of the name, address, and contact information of the counterparty and a brief description of the nature of such person's paired swaps and swaptions market activity.''[70] By including 102S in New Form 102, the proposed rules would enable the submission of futures and swaps large trade reporting via a single electronic submission, enable the Commission to integrate its analysis of the information provided on 102S filings with that

[68] *See supra* section I(B).

[69] Business days are Monday through Friday calendar days that are not Federal holidays. For example, if an account becomes a volume threshold account on a Friday, it must be reported to the Commission by 9:00 on Monday (the next business day).

[70] 17 CFR 20.5(a).

provided on New Form 102A and New Form 102B submissions, and clarify for market participants the specific information and data fields that should be submitted in a 102S filing. As explained above, 102S would also incorporate considerations developed in the Swaps Large Trader Guidebook for compliance with part 20. The Commission is proposing that these rules replace the 102S submission procedure and guidance in the Swaps Large Trader Guidebook.[71]

The timing for submitting 102S filings would continue to be subject to existing § 20.5(a)(3).[72] The Commission specifically requests comment on its proposal to retain § 20.5(a)(3) as the timing requirement for submitting 102S filings on New Form 102.

ii. 102S Change Updates and Refresh Updates

Section 20.5(a)(4) of the proposed rules provide that, if any change causes the information filed on a 102S for a consolidated account to no longer be accurate, an updated 102S shall be filed with the Commission no later than 9:00 a.m. eastern time on the business day after such change occurs, or on such other date as directed by special call of the Commission (''change updates'').

In addition to change updates, proposed § 20.5(a)(5) requires that, starting on a date specified by the Commission or its designee and at the end of each six month increment thereafter (or such later date specified by the Commission or its designee), each clearing member or swap dealer resubmit every 102S that it has submitted to the Commission for each of its consolidated accounts (''refresh updates''). As with the 102A and 102B, discussed above, the goal of the refresh update provision is to establish discrete points in time where all 102S data is considered accurate and reliable. The Commission is proposing the refresh update provision in an effort to maintain accurate 102S data, and to avoid the data drift which is often associated with long-term data collection efforts.

Both the change update and refresh update provisions of § 20.5(a) include the following sunset provision: A clearing member or swap dealer may stop providing change updates or refresh updates for a Form 102S that it has submitted to the Commission for any consolidated account upon notifying the Commission that the account in question is no longer reportable as a consolidated account.

D. Form 71

Proposed, New Form 71 (''Identification of Omnibus Accounts and Sub-Accounts'') would be sent to omnibus account originating firms, at the discretion of Commission staff, in the event that a volume threshold account is identified as a customer omnibus account on Form 102B. The relevant account number and reporting market listed on the 102B will be provided on Form 71. Recipients of a Form 71 would be required to provide information regarding any account to which the customer omnibus account allocated trades that resulted in reportable trading volume for the account receiving such allocations (a ''reportable sub-account'') on a specified trading date.[73] Form 71 is designed to permit originating firms to report the required information directly to the Commission without requiring such firms to disclose information regarding customers to potential competitors. If a reportable sub-account is itself an omnibus account (an ''omnibus reportable sub-account''), then the originating firm would be required to (a) indicate whether the omnibus reportable sub-account is a house or customer omnibus account and (b) identify the originator of the omnibus reportable sub-account. Another Form 71 (and a New Form 40) would be sent, at the discretion of Commission staff, to the originator of a customer omnibus reportable sub-account identified on Form 71. At its discretion, the Commission will continue to reach through layered customer omnibus reportable sub-accounts via successive Form 71s until reaching all reportable sub-accounts, if any, that are not omnibus sub-accounts.

If a reportable sub-account identified on Form 71 is not an omnibus sub-account, then the originating firm will be required to identify the owner(s) and controller(s) of the non-omnibus reportable sub-account. A New Form 40 will be sent at the discretion of Commission staff to such owner(s) and controller(s). Form 71 will therefore enable the Commission to collect the same level of information regarding owners and controllers (via a subsequent New Form 40) that the Commission would collect with respect to a non-omnibus volume threshold account identified on 102B. The key data points proposed to be collected in Form 71 are summarized below.

As a threshold question, section A of Form 71 requires the originator of an omnibus volume threshold account or a reportable sub-account to confirm certain identifying information regarding the originator. Such information would have been reported to the Commission by an omnibus account carrying firm on Form 102B or on a preceding Form 71 (*e.g.,* the originator's name, address and phone number), and used to auto-populate the present Form 71. The originator is prompted to update any incorrect information provided in Section A.

Second, section B of Form 71 requires the originator to provide certain information regarding the allocation of trades from a specified account number, and on a specified date and reporting market, to another account (called a ''recipient account''). Specifically, the originator is required to indicate whether: (1) It allocated trades from the specified account number on the specified date and reporting market that resulted in reportable trading volume for a recipient account; (2) it allocated trades from the specified account number on the specified date and reporting market, but the allocations did not sum to reportable trading volume for a recipient account on such date; or (3) it did not allocate any trades from the specified account number on the specified date and reporting market.

If condition (1) is met, the originator is required to indicate in section B whether the reportable sub-account is an omnibus reportable sub-account. If so, the originator is required to indicate whether the omnibus reportable sub-account is a house or customer omnibus account, and to provide information sufficient to identify and contact the originator of the sub-account (*e.g.,* the originator's name, address and phone number, and a contact name, contact job title, and the relationship of the contact to the originator). As noted above, another Form 71 will be sent at the discretion of Commission staff to the originator of a customer omnibus reportable sub-account identified in response to section B of Form 71. Therefore, Form 71 may be sent to a chain of such originators if each originator allocated trades to another customer omnibus reportable sub-account.

If the reportable sub-account is not an omnibus sub-account, the originator is required to provide information sufficient to identify and contact the owner(s) and controller(s) of such non-omnibus reportable sub-account (*e.g.,*

[71] *See* Swaps Large Trader Guidebook at p. 21–23 and p. 88, Appendix D. *See also supra* note 25.

[72] 17 CFR 20.5(a)(3) provides: ''Reporting entities shall submit a 102S filing within three days following the first day a consolidated account first becomes reportable or at such time as instructed by the Commission upon special call.''

[73] The relevant trading date would be specified by Commission staff on Form 71 at the time the special call is made.

the name, address and phone number of the owner(s) and controller(s)). This information will enable the Commission, in its discretion, to send a New Form 40 to such owner(s) and controller(s).

The Commission requests public comment regarding the suitability of Form 71 to omnibus volume threshold accounts and omnibus reportable sub-accounts associated with SEFs. The Commission also requests comment regarding how Form 71 should be amended, if at all, to heighten its utility with respect to SEFs.

E. New Form 40

This Notice proposes a revised Form 40 that would be required to be completed, on special call of the Commission, by individuals, persons, and other entities identified on any of 102A, 102B, 102S, and Form 71. As proposed herein, New Form 40, still referred to as the ''Statement of Reporting Trader,'' would continue to serve the function traditionally met by existing Form 40 by providing the Commission with basic contact and trading activity information about those persons and entities identified in the Commission's New Form 102 program. New Form 40 would also be the vehicle through which market participants subject to 17 CFR 20.5(b) submit their 40S filings. As part of its implementation plan related to this proposal, and described in more detail below, the Commission is proposing to develop a Web-based portal through which market participates would complete, submit, and (when necessary) update their New Form 40—thereby curing much of the inefficiency, inaccuracy, and uncertainty associated with the current paper or facsimile based submission process.

Specifically, as proposed herein, New Form 40 (whether completed as a New Form 40 or as a 40S filing) would be required to be completed on call, as directed by Commission staff. Because the proposal anticipates a Web-based portal and user profile system, those entities required to complete a New Form 40 would also be under a continuing obligation, per direction in the special call, to update and maintain the accuracy of their profile information by periodically visiting the online New Form 40 portal to review, verify, and/or update their information.

Generally, New Form 40 would request basic information regarding the reporting trader; contact information for the individual(s) responsible for the reporting trader's trading activities, risk management operations, and the information on the New Form 40; if applicable, omnibus account information, foreign government affiliation information, and an indication regarding the reporting trader's status as a domestic or non-domestic entity; information regarding the reporting entity's ownership structure in connection with its parents and subsidiaries; information regarding the reporting trader's control relationships with other entities; information regarding other relationships with persons that influence or exercise authority over the trading of the reporting trader; an indication regarding swap dealer status and major swap participant status; and various indications regarding the nature of the reporting trader's derivatives trading activity. The form includes definitions of certain terms, including parent, subsidiary, and control, to be used for the purpose of completing New Form 40. The Commission specifically requests comment on the appropriateness of these definitions and whether the definitions should be changed in any way.

New Form 40 would also require reporting traders who engage in commodity index trading (''CIT''), as defined in the new form, to identify themselves to the Commission. New Form 40 defines CIT as: (a) an investment strategy that consists of investing in an instrument (e.g., a commodity index fund, exchange-traded fund for commodities, or exchange-traded note for commodities) that enters into one or more derivative contracts to track the performance of a published index that is based on the price of one or more commodities, or commodities in combination with other securities; or (b) an investment strategy that consists of entering into one or more derivative contracts to track the performance of a published index that is based on the price of one or more commodities, or commodities in combination with other securities.

An example of CIT described in clause (a) is the strategy of purchasing shares in an exchange-traded fund (ETF) that purchases futures contracts based on the amount of funds contributed by investors. It is typical for an ETF for commodities to track the performance of a widely cited commodity benchmark. An example of CIT described in clause (b) is the strategy of an investor entering into a total-return swap with a counterparty. The counterparty would agree to pay the investor the total return on (e.g.) a commodity index, and would hedge the swap by buying futures contracts. Reporting traders engaged in CIT as defined in (b) are required to indicate whether they are, in the aggregate, pursuing long exposure or short exposure with respect to the relevant commodities or commodity groups listed on the Form (see question 14ii(a) in New Form 40).

The Commission requests public comment regarding the definition of CIT in New Form 40. The Commission also requests comment on whether the definition captures all forms of CIT present in the market, or if not, how the definition should be modified. Finally, the Commission requests comment regarding question 14ii(a) in New Form 40, and whether it will adequately capture reporting traders' exposure in the commodities in which they engage in CIT.

V. Data Submission Standards and Procedures

During the comment period, the Commission anticipates that its data and technology staff will work with market participants and potential reporting entities to address potential information technology standards to be associated with the proposed rules. The Commission encourages interested parties to share information directly or through any industry working groups wishing to provide technical input pertaining to relevant data fields, formats, and submission requirements. The Commission may receive information through comment letters submitted according to the instructions above or through on-the-record meetings with industry participants, including staff-led public roundtables.[74] The Commission anticipates that this process may also include staff visits to market participant facilities in order to observe onsite demonstrations of existing and potential technology capabilities, operation processes, and, more generally, to gain more direct knowledge and understanding of what an implementation effort will require. Based on information gathered during the comment period, the Commission will direct its data and technology staff to develop data requirements so that the Commission can identify and define a data submission standard for each submission type (*e.g.,* an XML data feed) in preparation for the implementation of any final rules that follow from this Notice.

Specifically, the Commission anticipates creating a secure internet portal with the proposed electronic New Form 102, New Form 40, and New Form

[74] Staff-led public roundtables are included here only as a possible means by which the Commission may choose to receive public comments. The Commission has not yet determined whether any such roundtable(s) will be held in connection with this Notice.

71 for beta testing in the event that this Notice ultimately results in final rules. Industry participants would be encouraged to review, test, and comment on the portal and online form capabilities. Where appropriate, the Commission may direct its staff to work with international data standards authorities to officiate the defined standards. As part of the completion of the data standards and online forms, the Commission plans on publishing a data compliance guidebook with detailed submission instructions.[75]

It is envisioned that once the rule is effective and all technology at the CFTC is in place, the following capabilities will be available:

FCMs (including clearing members), foreign brokers, or swap dealers that trigger a position or volume based reporting obligation will generate the appropriate 102A, 102B, or 102S standard file and send it to the Commission via secure file transfer protocol (''FTP''). The Commission will provide the necessary FTP IP address, login, and password and will coordinate with the reporting entity to set up the secure FTP protocol handlers. Additionally, the Commission may provide file converters (such as CSV-to-XML) to simplify the data standard compliance requirements for the industry. Alternatively, the 102A, 102B and 102S data may be submitted through an electronic version of the form which would be available on the Commission's secure Web site portal.

New accounts identified on the New Form 102 by the reporting entity will be evaluated by Commission staff to determine next step actions (*i.e.,* requesting a New Form 40 or New Form 71). If it is determined that a New Form 40 or New Form 71 should be sent to an account identified on a New Form 102 submission, the Commission would contact the named account (generally via email, using the email address provided on the New Form 102) to request and provide instructions for the appropriate CFTC form. The instructions would include a Web site address, login, and password to access the specific form needed. The named account may be required to submit a completed online form upon receiving the request.

Depending on the information provided in the Form 71, additional reportable sub-accounts named in the form may be asked to complete a New Form 40 or Form 71 using the same process described above.

Finally, the Commission proposes that any final rules resulting from this Notice include separate ''effective'' and ''compliance'' dates. The effective date of any final rule would begin 60 days after such rule's publication in the **Federal Register**. The Commission proposes that any compliance date, however, would be delayed by an additional 90 days (for a total of 150 days after a final rule's publication in the **Federal Register**). Upon reaching the effective date of any final rule, market participants and reporting entities should be prepared to begin working with the Commission's data and technology staff to test and implement any information technology standards or systems associated with the final rules. Such cooperation would include providing all test data or form filings requested by the Commission's data and technology staff, in the form and manner requested by staff. In the absence of any further relief by the Commission, all market participants and reporting entities subject to final rules would be expected to be in full compliance by the compliance date, including having submitted complete and accurate filings using one of the two submission methods specified above. The Commission seeks public comment on the proposed schedule and procedures for the effective date and compliance date of any final rule resulting from this Notice.

VI. Review and Summary of Regulatory Changes To Implement New and Amended Forms

To implement the new and amended forms described above, the Commission proposes to revise parts 15, 17, 18, and 20 of its regulations as follows.

A. Part 15

Existing part 15 enumerates certain defined terms and other provisions applicable to parts 15 through 19 and 21 of the Commission's regulations. The Commission proposes to amend part 15 to effectuate the enhanced market participant and account identification regime proposed in this Notice, including new Forms 102B and 71. Specifically, the Commission proposes to do the following: Codify twelve new defined terms in § 15.00; update the list of ''persons required to report'' in § 15.01 to include persons identified on New Forms 102B and 71; revise § 15.04 to provide the ''reportable trading volume level'' for volume threshold accounts and other new account types; and make conforming changes in §§ 15.00(q) and 15.02.[76] The proposed amendments to part 15 are summarized below.

New Forms 102 and 71 would require the identification of a number of account types not currently addressed in the Commission's regulations. Accordingly, the Commission proposes to introduce the following new defined terms in § 15.00:

- § 15.00(w). *Omnibus account,* meaning any trading account that one FCM, clearing member or foreign broker carries for another and in which the transactions of multiple individual accounts are combined. The identities of the holders of the individual accounts are not generally known or disclosed to the carrying firm;
- § 15.00(x). *Omnibus account originator,* meaning any FCM, clearing member or foreign broker that executes trades for one or more customers via one or more accounts that are part of an omnibus account carried by another FCM, clearing member or foreign broker;
- § 15.00(y). *Volume threshold account,* meaning any trading account that executes, or receives via allocation or give-up, reportable trading volume on or subject to the rules of a reporting market that is a board of trade designated as a contract market under § 5 of the Act or a swap execution facility registered under § 5h of the Act;
- § 15.00(z). *Omnibus volume threshold account,* meaning any trading account that, on an omnibus basis, executes or receives via allocation or give-up, reportable trading volume on or subject to the rules of a reporting market that is a board of trade designated as a contract market under § 5 of the Act or a swap execution facility registered under § 5h of the Act;
- § 15.00(aa). *Omnibus reportable sub-account,* meaning any trading sub-account of an omnibus volume threshold account, which sub-account executes reportable trading volume on an omnibus basis. Omnibus reportable sub-account also means any trading account that is itself an omnibus account, executes reportable trading volume, and is a sub-account of another omnibus reportable sub-account; and
- § 15.00(bb). *Reportable sub-account,* meaning any trading sub-account of an omnibus volume threshold account or omnibus reportable sub-account, which sub-account executes reportable trading volume.

Volume threshold accounts, omnibus volume threshold accounts, omnibus reportable sub-accounts, and reportable sub-accounts all reflect accounts that execute (or receives via allocation or give-up) ''reportable trading volume.'' Accordingly, the Commission proposes

[75] For a recent example of a similar undertaking, *see* the Swaps Large Trader Guidebook, linked *supra* at note 36.

[76] 17 CFR 15.00, 15.01, 15.04, 15.00(q) and 15.02.

to codify a new § 15.00(u) that defines reportable trading volume as contract trading volume that meets or exceeds the level specified in proposed § 15.04. Section 15.04, in turn, would provide that reportable trading volume for a trading account is trading volume of 50 or more contracts, during a single trading day, on a single reporting market that is a board of trade designated as a contract market under § 5 of the Act or a swap execution facility registered under § 5h of the Act, in all instruments that such reporting market designates with the same product identifier (including purchases and sales, and inclusive of all expiration months).[77]

Notably, § 15.04 addresses trading volume, not open positions, and would require that purchases and sales by a trading account be summed to determine whether such account has reached the reportable trading volume. Section 15.04 also stipulates that reportable trading volume should encompass all instruments that the reporting market designates with the same product identifier. In this regard, the Commission observes that if a reporting market utilizes the same identifier to designate both the open-outcry and electronically-traded variants of a product, then a clearing firm reporting on Form 102B should sum a trading account's activity in both the open-outcry and electronic venues to determine whether such trading account has reached the reportable trading volume. Similarly, if a reporting market uses the same identifier to designate the futures, options and swaps variants of a product, then a trading account's activity in futures, options and swaps in such product should be summed to determine whether the trading account has reached the reportable trading volume. Conversely, if a reporting market utilizes different product identifiers in these circumstances, then a clearing firm reporting on Form 102B should not sum a trading account's activity across venues or across futures, options and swaps. The Commission anticipates that its proposed approach, which relies on reporting markets' existing product identification practices, would be less burdensome than an approach which requires aggregation of the same product when traded under different identifiers. The Commission specifically requests public comment on its proposed account-type definitions in § 15.00, and on its definition of reportable trading volume in § 15.04.

The Commission also proposes to add ''control'' to the list of defined terms in § 15.00.[78] The Commission's proposed definition, which would apply only to special accounts (New Form 102A) and consolidated accounts (Form 102S), would be codified in § 15.00(t), and would define control as ''to actually direct, by power of attorney or otherwise, the trading of a special account or a consolidated account.'' The proposed definition specifies that special accounts and consolidated accounts may have more than one controller. The Commission notes that the proposed definition of ''control'' would apply solely for the purpose of satisfying the reporting obligations under parts 15 through 19 and 21 of this chapter. The proposed definition would not limit or alter existing law with respect to the meaning of the term control for the purpose of enforcing other requirements under the Act and the Commission's regulations, including those relating to position limits or manipulation. Similarly, existing requirements regarding the aggregation of positions in separate accounts for reporting or other purposes under the Act and Commission regulations (*e.g.,* §§ 17.00(b) and 150.4) would not be altered by the definition of ''control'' proposed in § 15.00(t).

The Commission also proposes to separately define the concept of control in the context of trading accounts, volume threshold accounts, and reportable sub-accounts. For these accounts, ''control'' may only be exercised by natural persons. Accordingly, the proposed definitions in § 15.00(cc), 15.00(dd), and 15.00(ee) define trading account controllers, volume threshold account controllers, and reportable sub-account controllers, respectively, as ''a natural person who by power of attorney or otherwise actually directs the trading of a [trading account, volume threshold account, or reportable sub-account].'' Each account type may have more than one controller. The proposed definitions in § 15.00(cc), 15.00(dd), and 15.00(ee) would be relevant to the submission of New Forms 102A (trading accounts), 102B (volume threshold accounts), and 71 (reportable sub-accounts), respectively.[79] The Commission specifically requests public comment on its proposed definition of control in § 15.00(t), and on its proposed definitions of ''trading account controller,'' ''volume threshold account controller'' and ''reportable sub-account controller'' in § 15.00(cc), (dd) and (ee).

Finally, the Commission proposes to define direct market access (''DMA'') in a new § 15.00(v). The Commission proposes to define DMA as ''a connection method that enables a market participant to transmit orders to a DCM's electronic trade matching system without re-entry by another person or entity, or similar access to the trade execution platform of a SEF.'' Pursuant to the proposed definition, such access could be provided directly by a DCM or SEF, or by a 3rd-party platform.

The introduction of new account and controller types in New Forms 102A, 102B, and 71 would result in a corresponding expansion in the categories of persons required to provide New Form 40 reports. Accordingly, the Commission proposes to amend § 15.01(c), which currently requires Form 40 reports only from persons who hold or control reportable positions.[80] The proposed rules would expand § 15.01(c) to require New Form 40 reports from traders who own, hold, or control reportable positions (identified via New Form 102A); volume threshold account controllers (identified via New Form 102B); persons who own volume threshold accounts (identified via New Form 102B); reportable sub-account controllers (identified via New Form 71); and persons who own reportable sub-accounts (identified via New Form 71).

Other proposed amendments to part 15 include: A revision to the definition of ''reporting market'' in existing § 15.00(q) to replace the provision's cross-reference to § 1a(29) of the Act with a cross-reference to § 1a(40); a further revision to existing § 15.00(q) to remove the provision's reference to derivatives transaction execution facilities (''DTEFs''); and the amendment of existing § 15.02, which contains a list of the forms contained in parts 15 through 19, and 21.[81] Section 15.02 would be revised to reflect the proposed introduction of new Form 71, the renaming of Form 102, and the new OMB control number that would be created by this rulemaking.

[77] Section 15.04 of part 15 is currently reserved.

[78] The proposed definition of ''control'' in § 15.00 is based upon the definition of ''controlled account'' in § 1.3(j) of part 1.

[79] The proposed definitions also specify that volume threshold accounts and reportable sub-accounts may have more than one controller.

[80] 17 CFR 15.01(c).

[81] 17 CFR 15.00(q) and 15.02. The Dodd-Frank Act modified § 1a of the CEA. As a result, the definition of ''registered entity'' previously found in § 1a(29) of the CEA is now in § 1a(40). The Commission proposes to revise existing § 15.00(q) so that it cites to § 1a(40) for the definition of registered entity. The Commission proposes to also revise existing § 15.00(q) by removing the provision's reference to DTEFs, a category of regulated markets that was eliminated by § 734 of the Dodd-Frank Act.

B. Part 17

The Commission is proposing a number of substantive, conforming and administrative amendments to §§ 17.01, 17.02, and 17.03 of part 17,[82] and is also proposing new §§ 17.02(c), 17.03(e), 17.03(f), and 17.03(g). The proposed amendments and new provisions address: the identification of special accounts, volume threshold accounts, and omnibus volume threshold accounts (§ 17.01); the form, manner, and time of New Form 102A and 102B filings (§ 17.02(b) and 17.02(c), respectively); and the delegation of related authorities from the Commission to the Director of the Division of Market Oversight (''DMO'') or the Director of the Office of Data and Technology (''ODT'') (§ 17.03).

i. Substantive Proposed Amendments to § 17.01

Existing § 17.01[83] requires reporting entities (*i.e.,* FCMs, clearing members, foreign brokers, and contract markets that list exclusively self-cleared contracts) to identify special accounts on existing Form 102, to provide for each special account the information required by paragraphs (a)–(f), and to comply with other requirements in paragraphs (g)–(h). The Commission proposes to amend § 17.01 by replacing all of its existing provisions with the provisions described below.

First, the Commission proposes to codify a new § 17.01(a) that would require reporting entities to identify special accounts on New Form 102A (''§ 17.01(a) reports''), and would also refer reporting entities directly to the new form for the required data points. Second, the Commission proposes to introduce a new § 17.01(b) that would subject volume threshold accounts to an account identification regime comparable to the position-based regime already existing for special accounts.[84] Proposed Section 17.01(b) would specifically require clearing firms to identify volume threshold accounts on New Form 102B (''§ 17.01(b) reports''). Similarly, the Commission proposes to introduce a new § 17.01(c) that would subject omnibus accounts to their own volume-based account identification regime.[85] Proposed § 17.01(c) would require the originator of an omnibus volume threshold account (or the originator of an omnibus reportable sub-account within such account) to file New Form 71 ''Identification of Omnibus Accounts and Sub-Accounts'' upon special call by the Commission or its designee.

The fourth substantive amendment proposed for § 17.01 would codify a new § 17.01(d). Proposed § 17.01(d) would require reporting markets that list exclusively self-cleared contracts to file § 17.01(a) and § 17.01(b) reports as if they were clearing members. Proposed § 17.01(d) reflects the requirements of existing § 17.01(g)[86] with respect to special accounts, but also incorporates the new volume threshold accounts proposed herein. Finally, the Commission proposes to introduce a new § 17.01(e) that would extend the Commission's special call authority—currently applicable to special accounts—to also include volume threshold accounts, omnibus volume threshold accounts and reportable sub-accounts.[87] Responses to special calls would be due within 24 hours.

ii. Substantive Proposed Amendments to § 17.02(b); New §§ 17.02(c), 17.03(e), 17.03(f) and 17.03(g)

Section 17.02(b)[88] currently addresses the form, manner, and completion date requirements of existing 102 filings. Specifically, § 17.02(b)(1) requires reporting entities to submit existing Form 102 upon special call by the Commission; in the absence of a special call, § 17.02(b)(2) requires reporting entities to submit existing Form 102 within three business days of the first day that a special account is reported to the Commission. The Commission proposes to replace both provisions as described below.

First, as explained above, the Commission proposes to strike existing § 17.02(b)(1) and to shift its special call requirements to proposed § 17.01(e). Second, the Commission proposes to strike existing § 17.02(b)(2) and to replace its Form 102 submission requirements with a new § 17.02(b)(1)–(4) to address the form and manner of New Form 102A filings for special accounts. Proposed § 17.02(b)(1) would direct reporting entities to the Commission's Web site (*www.cftc.gov*) for detailed instructions on the Form 102A filing process. Proposed § 17.02(b)(2)–(4) would address the completion date requirements of initial Form 102A submissions, 102A change updates, and 102A refresh updates, respectively. The proposed timing requirements appurtenant to initial 102A filings and the change and refresh updates are discussed in detail in section IV(A), above.

To address New Form 102B filings for volume threshold accounts, the Commission proposes to codify a new § 17.02(c). Proposed § 17.02(c) would follow a structure similar to that of proposed § 17.02(b), with § 17.02(c)(1) directing reporting entities to *www.cftc.gov* for detailed instructions on the Form 102B filing process, and proposed § 17.02(c)(2) through (4) addressing the timing of initial Form 102B filings, 102B change updates, and 102B refresh updates, respectively. The proposed timing requirements appurtenant to initial 102B filings and change and refresh updates are discussed in detail in section IV(B), above.

Finally, the Commission also proposes to codify a new § 17.03(e) that would provide the Director of ODT with delegated authority to make special calls to solicit information from omnibus volume threshold account originators and omnibus reportable sub-account originators on New Form 71. The Commission also proposes to codify (a) a new § 17.03(f) that would provide the Director of DMO with delegated authority to determine the date on which each FCM, clearing member, or foreign broker shall update or otherwise resubmit every Form 102 that it has submitted to the Commission for each of its special accounts and (b) a new § 17.03(g) that would provide the Director of DMO with delegated authority to determine the date on which each clearing member shall update or otherwise resubmit every Form 102 that it has submitted to the Commission for each of its volume threshold accounts.

iii. Conforming and Administrative Amendments to Part 17

The Commission is proposing a number of conforming and administrative amendments to part 17. First, the Commission proposes to revise § 17.00(g)(2)(iii), which defines the ''account number'' field for position reports.[89] The proposed revisions would eliminate the provision's cross-references to § 17.00(c), which is reserved, and to existing § 17.01(a), which the Commission proposes to strike.[90] Section 17.00(g)(2)(iii) would incorporate a new cross-reference to New Form 102.

Second, the Commission proposes to revise existing § 17.03(a), which grants the Director of DMO the authority to determine whether FCMs, clearing

[82] 17 CFR 17.01, 17.02 and 17.03.

[83] 17 CFR 17.01.

[84] *See supra* section IV(B) and *infra* section IX.

[85] *See supra* section IV(D) and *infra* section IX.

[86] 17 CFR 17.01(g).

[87] The Commission's special call authority with respect to special accounts is currently found in § 17.02(b)(1), which the Commission proposes to strike, as explained below.

[88] 17 CFR 17.02(b).

[89] 17 CFR 17.00(g)(2)(iii).

[90] 17 CFR 17.00(c) and 17.01(a).

members and foreign brokers can report certain information on series '01 forms, or can use some other format upon a determination that such person is unable to report the information using the standard transmission format.[91] More specifically, § 17.03(a) would be revised to grant such authority to the Director of ODT, rather than the Director of DMO.

Third, the Commission proposes to revise existing § 17.03(b), which grants the Director of DMO the authority to approve the late submission of position reports and Form 102.[92] Section § 17.03(b) would be revised to grant such authority to the Director of ODT, rather than the Director of DMO. Section 17.03(b) would be further revised to: (i) Replace the provision's cross-reference to § 17.01,[93] which the Commission proposes to strike, with cross-references to proposed § 17.01(a) and 17.01(b); and (ii) eliminate the provision's cross-reference to existing § 17.01(g),[94] which the Commission also proposes to strike.

Fourth, the Commission proposes to revise existing § 17.03(c), which grants the Director of DMO the authority to permit reporting entities filing Form 102 to authenticate it through a means other than signing the form.[95] Section 17.03(c) would be revised to grant such authority to the Director of ODT, rather than the Director of DMO. Section 17.03(c) would be further revised to replace the provision's existing cross-reference to § 17.01(f),[96] which the Commission proposes to strike, with a cross-reference to proposed § 17.01, and to address New Form 71.

Finally, the Commission proposes to revise existing § 17.03(d), which grants the Director of DMO the authority to approve a format and coding structure other than that set forth in § 17.00(g).[97] Section 17.03(d) would be revised to grant such authority to the Director of ODT, rather than the Director of DMO.

C. Part 18

Existing § 18.04 (the ''Statement of Reporting Trader'') requires every trader who holds or controls a reportable position to file a Form 40 upon special call by the Commission or its designee and to provide on Form 40 information required by existing § 18.04(a) thorugh (c).[98] The Commission proposes to amend § 18.04 by striking all of its existing provisions and replacing them as described below.

First, and consistent with its approach to New Form 102, the Commission proposes to transition existing § 18.04(a) through (c)'s detailed form content requirements from the regulatory text to New Form 40. Second, the Commission proposes to codify a new § 18.04(a) that, as with existing § 18.04, would require every trader who holds or controls a reportable position to file a New Form 40 upon special call by the Commission or its designee. Finally, to accommodate volume threshold accounts and reportable sub-accounts identified on New Forms 102 and 71, the Commission proposes to codify a new § 18.04(b) that would require volume threshold account controllers, persons who own a volume threshold account, reportable sub-account controllers, and persons who own a reportable sub-account to file New Form 40 upon special call by the Commission or its designee.

Existing § 18.05 requires traders who hold or control reportable positions to maintain books and records regarding all positions and transactions in the commodity in which they have reportable positions.[99] In addition, existing § 18.05 requires that the trader furnish the Commission with information concerning such positions upon request. The Commission proposes to expand § 18.05 to also impose books and records requirements upon (a) volume threshold account controllers and owners of volume threshold accounts reported on New Form 102B and (b) reportable sub-account controllers and persons who own a reportable sub-account reported on New Form 71.

D. Part 20

As with Forms 102 and 40, the Commission proposes to transfer the list of data points required in Form 102S data point from the relevant regulatory text (*i.e.,* § 20.5) [100] to the form itself. More specifically, the Commission proposes to eliminate the data points specified in § 20.5(a)(1), and to revise § 20.5(a)(1) to provide that when a counterparty consolidated account first becomes reportable, the reporting entity shall submit a 102S filing (''initial 102S filing''). The timing for submitting initial 102S filings would continue to be subject to existing § 20.5(a)(3).[101] Finally, the Commission proposes to codify new § 20.5(a)(4) and 20.5(a)(5) to require change and refresh updates for Form 102S in the same manner as they are required for Form 102A. The Commission is also proposing a conforming amendment to § 20.5(a)(2) to eliminate the existing instructions with respect to updating 102S filings.

VII. Questions and Request for Comment

The Commission requests public comment on the proposed forms and regulations described in this Notice, and welcomes specific alternatives to the regulatory text proposed to be implemented and the data points proposed to be collected herein. In addition to this general request for comments, the Commission specifically requests public comment on the questions below.

1. With respect to DCMs, the Commission requests public comment regarding the RTVL proposed in § 15.04, which is: 50 or more contracts, during a single trading day, on a single reporting market that is a board of trade designated as a contract market under § 5 of the Act or a swap execution facility registered under § 5h of the Act, in all instruments that such reporting market designates with the same product identifier (including purchases and sales, and inclusive of all expiration months). If the RTVL or parameters proposed in § 15.04 (*e.g.,* a RTVL measured in ''contracts'' and set at 50 contracts; a reliance on ''product identifiers;'' or the reference to ''expiration months'') are inadequate with respect to DCMs, then the Commission requests public comment regarding how the RTVL or such parameters should be revised in any final rule arising from this Notice. *See* section IV(B), above, and section IX, below.

2. The Commission requests public comment as to whether it should retain § 20.5(a)(3) as the timing requirement for submitting initial 102S filings on New Form 102. *See* section IV(C), above.

3. The Commission requests public comment on the proposed change and refresh updates for 102A, 102B, and 102S filings, including comments with respect to the timing, frequency, and contents of such updates. *See* section IX, below.

4. The Commission requests public comment as to the appropriateness of the definitions of ''parent'' and ''subsidiary'' in New Form 40, and whether these definitions should be changed in any way. *See* section IV(E), above.

5. The Commission requests public comment regarding the definition of ''commodity index trading'' (CIT) in New Form 40. The Commission also requests comment on whether the

[91] 17 CFR 17.03(a).
[92] 17 CFR 17.03(b).
[93] 17 CFR 17.01.
[94] 17 CFR 17.01(g).
[95] 17 CFR 17.03(c).
[96] 17 CFR 17.01(f).
[97] 17 CFR 17.03(d) and 17.00(g).
[98] 17 CFR 18.04(a) through (c).
[99] 17 CFR 18.05.
[100] 17 CFR 20.5.
[101] 17 CFR 20.5(a)(3). *See supra* section III(B).

definition captures all forms of CIT present in the market, or if not, how the definition should be modified. Finally, the Commission requests comment regarding question 14ii(a) in New Form 40, and whether it will adequately capture reporting traders' exposure in the commodities in which they engage in CIT. *See* section IV(E), above.

6. The Commission requests public comment on the schedule and procedures proposed in section V above for the effective date and compliance date of any final rule resulting from this Notice.

a. With respect to trading accounts associated with a DCM or a SEF that is not yet registered on the effective date or the compliance date proposed in section V, should the effective date or the compliance date for the reporting of such trading accounts be delayed for a certain period? If so, how long should the effective date or compliance date be delayed?

7. The Commission requests public comment on whether it should codify a definition of ''trading account'' in § 15.00 of the Commission's regulations. ''Trading accounts'' refers to accounts identified by a reporting market in daily transaction-level TCRs submitted to the Commission pursuant to § 16.02 or any similar reports received from a SEF.[102] If commenters recommend that the Commission codify a definition of ''trading account'' in § 15.00, then the Commission requests that commenters offer a proposed definition, provided that such definition does not reference tags, Party Roles, or other specific data fields in the TCR. The Commission also requests public comment regarding the applicability of the proposed trading account concept to SEFs, including any alternatives to trading account that should be used with respect to SEFs.

8. The Commission requests public comment on its proposal to require that reporting firms that are clearing members identify, on Form 102A, the trading accounts that comprise a special account, and provide ownership and control information and TCR trading account numbers for such trading accounts. The Commission also requests public comment on the three factors offered in this Notice to determine whether a trading account comprises part of a special account. *See* section IV(A)(ii), above.

9. The Commission requests public comment on whether ''trading account(s) that comprise a special account'' should be a defined term in § 15.00 of the Commission's regulations, and how such definition should differ from the three factors discussed in this preamble, if at all. *See* section IV(A)(ii), above.

10. The Commission intends that the definition of ''volume threshold account'' captures all possible categories of accounts with reportable trading volume, including give-ups and other instances in which trades do not 'execute' on a DCM or SEF (e.g., block trades). The Commission requests public comment regarding whether the proposed definition of ''volume threshold account'' achieves this purpose, and if not, how the definition should be revised. *See* section IX, below.

11. The definition of ''omnibus reportable sub-account'' captures ''any trading sub-account, which sub-account *executes* reportable trading volume on an omnibus basis,'' while the definition of ''reportable sub-account'' captures ''any trading sub-account, which sub-account *executes* reportable trading volume'' (emphasis added). *See* section IX, below. Is the reference to 'executing' reportable trading volume the appropriate terminology in this context? Would it be preferable to refer instead to a sub-account that ''receives via allocation or give-up'' reportable trading volume? Is another terminology more appropriate?

12. With respect to SEFs, the Commission requests public comment regarding whether proposed § 15.04 contains the appropriate parameters for defining a RTVL for volume threshold accounts associated with a SEF (*e.g.,* a RTVL measured in ''contracts'' and set at 50 contracts; a reliance on ''product identifiers;'' or the reference to ''expiration months''). If the RTVL or parameters proposed in § 15.04 are inadequate for SEFs, then the Commission requests public comment regarding how the RTVL or such parameters should be revised in any final rule arising from this Notice. If commenters propose alternative parameters for defining a RTVL for volume threshold accounts associated with SEFs (*e.g.,* a parameter based on a notional value), please describe the proposed parameters in detail and indicate which products the parameters should apply to, in addition to other relevant criteria. The Commission also requests comment on the benchmarks that should be used to determine the RTVL for SEFs, including the percentage of trading accounts that should be identified and the percentage of products in which a given percentage of volume should be identified. In this regard, the Commission refers commenters to the proposed RTVL in the context of DCM trading accounts, products, and volume: an RTVL of 50 would identify approximately 33 percent of trading accounts, and at least 85 percent of volume in approximately 90 percent of products. The Commission may determine that any alternative RTVL for SEFs should achieve similar coverage. If commenters propose alternative parameters for defining a RTVL for volume threshold accounts associated with a SEF, please also describe any alternative benchmarks that are relevant to such parameters (e.g., what the reportable notional value for a particular product should be). *See* section IV(B) and note 68, above, and section IX, below.

13. The Commission requests public comment regarding proposed §§ 17.01(b), 17.01(d), and 17.02(c)(2)–(4), which place certain 102B reporting obligations on clearing members. Do the proposed regulations require any revision to adequately address 102B filings with respect to volume threshold accounts associated with SEFs? If so, how should proposed §§ 17.01(b), 17.01(d), and 17.02(c)(2)–(4) be amended? Should other reporting entities be considered, and if so, which ones?

14. The Commission requests public comment regarding whether the proposed constructs of ''trading account,'' ''volume threshold account,'' ''omnibus volume threshold account,'' and ''omnibus reportable sub-account'' are as applicable to SEFs as they are to trading on DCMs. *See* section IX, below.

b. If these constructs are not applicable, then the Commission requests specific comments on the differences between trading practices and/or account structures at DCMs versus SEFs that would preclude their use with respect to SEFs. The Commission also requests specific comments on how these constructs should be amended or substituted so that they are usable with SEFs. For example, in the context of SEFs, should the construct of volume threshold accounts be modified to refer to reportable trading volume associated with a particular legal entity identifier, rather than reportable trading volume associated with a particular trading account?

15. The Commission requests public comments on any defined terms or other provisions of the proposed rules that would require revision to accommodate the identification and reporting of volume threshold accounts, omnibus volume threshold accounts, and omnibus reportable sub-accounts associated with SEFs.

a. For example, the Commission requests public comment regarding

[102] 17 CFR 16.02.

whether the omnibus account structure, as proposed, is relevant and appropriate to SEFs. More specifically, the Commission requests public comment with respect to proposed § 15.00(w) and 15.00(x), which define omnibus account and omnibus account originator, respectively. The proposed definitions are based on market participants known to carry or originate omnibus accounts on DCMs. The Commission requests comment regarding whether other market participants should be included in proposed § 15.00(w) and 15.00(x) to account for market participants that may carry or originate omnibus accounts on SEFs.

16. The Commission requests public comment as to whether Form 102S should require the reporting of trading accounts that comprise a consolidated account in the same manner that proposed 102A requires the reporting of trading accounts that comprise a special account. If not, why not? The Commission also requests public comment regarding: (1) Whether the three factors used to determine whether a trading account comprises a special account are equally applicable to consolidated accounts; (2) whether ''trading account(s) that comprise a consolidated account'' should be a defined term in the Commission's regulations; and (3) the appropriate definition of ''trading account(s) that comprise a consolidated account.'' *See* section IV(A)(ii), above.

17. The Commission requests public comment as to whether New Forms 102 (including, in particular, Form 102S), 71, or 40 should be provided to swap data repositories (''SDR'') registered pursuant to part 49 of the Commission's regulations to assist such SDRs in fulfilling any swaps data aggregation responsibilities assigned by the Commission. If not, then the Commission requests specific public comment regarding any reasons why the forms should not be provided to SDRs.

a. If new Forms 102, 71, or 40 are provided to SDRs, should they be provided directly by reporting entities or by the Commission? The Commission specifically requests public comment regarding any reasons why the forms should not be provided to SDRs directly by reporting entities.

b. The Commission requests public comment regarding any additional considerations relevant to the provision of New Forms 102, 71, or 40 to SDRs directly by reporting entities, including:

i. the time, manner and format of submission to SDRs, including any necessary divergence from the time, manner, and format proposed herein for submission of the forms to the Commission;

ii. additional data points that should be contained in the forms to heighten their utility in any data aggregation performed by SDRs; and

iii. appropriate limitations on SDRs' use of any information received in Forms 102, 71, or 40, other than for data aggregation purposes specified by the Commission.

VIII. Related Matters

A. Cost Benefit Considerations

Section 15(a) [103] of the CEA requires the Commission to consider the costs and benefits of its actions before promulgating a regulation under the CEA or issuing an order. Section 15(a) further specifies that the costs and benefits shall be evaluated in light of the following five broad areas of market and public concern: (1) Protection of market participants and the public; (2) efficiency, competitiveness, and financial integrity of futures markets; (3) price discovery; (4) sound risk management practices; and (5) other public interest considerations. To the extent that these proposed regulations reflect the statutory requirements of the Dodd-Frank Act, they will not create costs and benefits beyond those resulting from Congress's statutory mandates in the Dodd-Frank Act. However, to the extent that the proposed regulations reflect the Commission's own determinations regarding implementation of the Dodd-Frank Act's provisions, such Commission determinations may result in other costs and benefits. It is these other costs and benefits resulting from the Commission's own determinations pursuant to and in accordance with the Dodd-Frank Act that the Commission considers with respect to the Section 15(a) factors.

The Commission requests comment on the costs and benefits associated with the Notice. As discussed below, the Commission has identified certain costs and benefits associated with the Notice and requests comment on all aspects of its proposed consideration of costs and benefits, including identification and assessment of any costs and benefits not discussed herein. In addition, the Commission requests that commenters provide data and any other information or statistics that the commenters relied on to reach any conclusions on the Commission's proposed consideration of costs and benefits.

[103] 7 U.S.C. 19(a).

The Commission notes that the cost estimates provided herein for New Forms 102A, 102B, 102S, 71, and 40 reflect estimates of: (i) The costs associated with the reporting and identification of special and consolidated accounts for positions reported under parts 17 and 20, respectively, of the Commission's regulations; and (ii) the costs associated with the reporting and identification of volume threshold accounts associated with DCMs and SEFs. Cost estimates for these forms are based on extrapolations from current forms and reports received from FCMs, IBs, and foreign brokers; reporting entities pursuant to part 20; and DCMs pursuant to § 16.02.

The Commission understands that the costs and benefits of the proposed reporting regime for trading accounts, volume threshold accounts, omnibus volume threshold accounts, and omnibus reportable sub-accounts associated with SEFs may differ, possibly substantially, from the reporting regime for such accounts associated with DCMs. The Commission therefore requests specific quantitative estimates on the costs and benefits of Form 102B and 71 filings for volume threshold accounts, omnibus volume threshold accounts, omnibus reportable sub-accounts, and market participants associated with SEFs.

More generally, the Commission has requested public comment, in section VII above, regarding the applicability of volume threshold accounts, omnibus volume threshold accounts, and omnibus reportable sub-accounts to SEFs. The Commission has also requested comment on the appropriate design of a reportable trading volume level for volume threshold accounts associated with SEFs, and on the appropriate reporting entities for volume threshold accounts associated with SEFs.

Finally, the Commission requests comment, including specific quantitative estimates, on the costs and benefits of associated with the identification of trading accounts associated with consolidated accounts.

i. Background

a. Description of the Statutory Authority

Pursuant to the authority of sections 4a, 4c(b), 4g, 4i, and 4t of the CEA, the Commission is proposing these revisions and updates to its large trader reporting rules and forms.[104] These CEA

[104] 7 U.S.C. 1 *et seq.* In addition, CEA § 8a(5) authorizes the Commission to promulgate such regulations that in its judgment are reasonably necessary to effectuate any provision of the Act or to accomplish any of the purposes of the Act. 7

provisions, described more fully above,[105] authorize the Commission to require reporting and recordkeeping from a wide range of market participants, including registered entities, FCMs, brokers, clearing members, swap dealers, and traders, engaging in transactions subject to the Commission's jurisdiction. Collectively, these CEA provisions warrant the maintenance of an effective and vigorous system of market and financial surveillance.

b. Prior Rules; Existing Forms 102 and 40

The existing rules and forms, described more fully above,[106] require FCMs, clearing members, and foreign brokers to identify special account traders to the Commission on a Form 102. On special call of the Commission, a Form 40 is then sent to each trader identified on a Form 102 submission, requiring the trader to provide the Commission with detailed contact information and to answer other questions designed to inquire into the nature of the trader's market activity. In both instances, the Form 102 and Form 40 are generally submitted on paper, via email, or via facsimile (*i.e.,* via some manual submission process). The questions and data points on both existing forms only relate to the Commission's existing position-based reporting rules.

c. The Proposed Rules

As described in the preamble above, the Commission is proposing amendments to the existing reporting rules and forms as they pertain to reportable positions in Commission regulated contracts. In addition, the Commission is proposing to expand the reporting rules and forms so that they may also be used to identify traders and trading accounts exceeding a volume-based reporting threshold, regardless of the resulting positions (*i.e.,* ''volume threshold accounts''). Finally, the proposed amendments would provide for the electronic submission of New Forms 102, 40, and 71.

ii. Costs and Benefits of the Proposed Rules

The Commission's consideration of costs and benefits begins with certain general considerations applicable to all forms, followed by specific discussions of the costs and benefits of: (1) New Form 102A, (2) New Form 102B, (3) 102S filings, (4) New Form 71, (5) New Form 40, and (6) 40S filings.

As a general matter, the Commission considers the incremental costs and benefits of the proposed regulations and forms, those costs that are above the baseline that is the Commission's existing regulations. As described in detail above, the proposed rule and form amendments would broaden the utility of existing forms.[107] The proposed amendments would also enhance the Commission's surveillance and large trader reporting programs for futures, options on futures, and swaps by clarifying which accounts are required to be reported on Form 102A; requiring the reporting on Form 102A of the trading accounts that comprise each special account; requiring the reporting of certain omnibus account information on Form 71 in connection with omnibus volume threshold accounts reported on Form 102B, together with the reporting of certain reportable sub-accounts within such omnibus volume threshold accounts; updating Form 40; and integrating the submission of 102S and 40S filings into the general Form 102 and Form 40 reporting program.

The Commission proposes that the costs the Notice would impose on market participants will vary depending on various factors, including the size and/or experience of the market participant; the scope (whether measured by position or volume) of the market participant's trading activity; and the number of distinct customer or proprietary special accounts, volume threshold accounts, and other account types required to be reported by each market participant. Given the range of factors relative to the potential costs of the proposed rules, reporting parties may face costs associated with one, more than one, or, in some instances, all of the revised rules and forms. For purposes of the Paperwork Reduction Act, the Commission has estimated the number of hours the average market participant would spend in connection with the information collection required by the Notice.[108] Based on those burden hour estimates, and as further explained in the Paperwork Reduction Act discussion below, the Commission estimates that affected participants would incur the following approximate costs in (i) completing Forms 102A and 102S and any resulting Form 40s, (ii) completing Forms 102B and 71 for volume threshold accounts associated with DCMs and SEFs and any resulting Form 40s, and (iii) complying with the books and records obligations arising from proposed § 18.05:

Regulation	Associated Report	Estimated Total Cost[109]
17.01(a)	New Form 102A	$ 2,083,165
17.01(b)	New Form 102B	$ 1,458,216
17.01(c)	New Form 71	$ 446,505
18.04(a)	New Form 40	$ 1,238,108
18.04(b)	New Form 40	$ 3,195,497
18.05	Books and Records	$ 214,605
20.5(a)	102S Filing	$ 393,050
20.5(b)	40S Filing	$ 117,915
Total Reporting and Recordkeeping Costs		$9,147,061

U.S.C. 12a(5). Also, pursuant to CEA § 3(b), the Act seeks to ensure the financial integrity of regulated transactions and to prevent price manipulation and other disruptions to market integrity. 7 U.S.C. 5(b).

[105] *See supra* section II.

[106] *See supra* section IV.

[107] New Form 102 is partitioned into: section 102A for the identification of position-based special accounts; section 102B for the collection of ownership and control information on individual trading accounts exceeding a volume-based reporting threshold; and section 102S for the submission of 102S filings for swap counterparty consolidated accounts with reportable positions.

[108] *See infra* the detailed discussion of costs and burdens in section VIII(C), which has been prepared for the purpose of the Commission's responsibilities under the Paperwork Reduction Act.

The Commission's CEA § 15(a) assessment of costs and benefits includes consideration of these estimated Paperwork Reduction Act information collection costs, as well as the range of factors that may increase or decrease these estimates.

In anticipation of a wide range of technological capabilities among reporting entities (again, varying based on the relative size and experience of a given reporting entity), the Commission is proposing an implementation program that would permit multiple submission methods for each form. By allowing reporting entities to select the submission method most suited to their existing capabilities and business model, reporting entities will be able to mitigate their own reporting costs.

While the Commission expects that an entity with a relatively larger number of reporting obligations (whether for the reportable accounts of its customers, or its own reportable accounts), would incur larger total costs in complying with the proposed reporting rules and submitting the related forms than a smaller firm, the Commission anticipates that these larger absolute costs will be mitigated by lower unit costs, and the marginal expense of reporting each additional reportable account would likely diminish once the entity established its data collection and reporting infrastructure. For high-volume reporting entities, the Commission is proposing an implementation program, to be conducted in conjunction with input from commenters, which will permit electronic submission of the forms to the Commission via a defined data submission standard. This transition from manual to automated form submission should reduce costs for high-volume reporters on a per-account basis.

In addition to evaluating these proposed rules based on the Commission's experience and expertise in the derivatives markets, this Notice took into account comment letters by industry participants received in response to the OCR NPRM.[110] In one such letter, the FIA offered a modified approach to the OCR reporting scheme proposed in the OCR NPRM, and offered cost estimates and projections for both the proposal contained in the OCR NPRM and the FIA alternative. FIA specifically expressed concerns about the implementation costs of the Commission's proposal in the OCR NPRM, stating that it would require firms to, among other things, re-negotiate all active customer agreements to require customers to provide and routinely update the necessary data points, build systems to enter the data, manually enter the data for each active account, put in place resources and processes to maintain the data, provide it to the reporting entity on a weekly basis, and monitor changes daily in order to update the database. In FIA's quantification of costs, gathered from interviews with member institutions, FIA provided the following estimates in relation to the proposal in the OCR NPRM:

> Our sample of 12 firms represents approximately 16 percent of the approximately 70 FCMs that execute and clear customer accounts. These firms handle in excess of $83.8 billion of customer funds, or approximately 62 percent of customers' segregated funds (as of July 31, 2010, according to monthly financial reports filed with the Commission). We found that the median firm would face total costs of roughly $18.8 million per firm, including implementation costs of roughly $13.4 million, and ongoing costs of $2.6 million annually. On a per account basis, the median cost would be $623 per account.

In comparison, FIA estimated that its alternative would result in significant first year cost savings, with additional, incremental savings following initial implementation. Accordingly, and in order to realize potential cost savings identified by FIA, the Commission has incorporated elements of the FIA's alternative approach into this proposal. For example, this proposal incorporates FIA suggestions regarding setting a threshold for determining when a volume threshold account is reportable and integrating OCR reporting into the existing Form 102 process. As noted in the FIA letter, and as substantiated by a sample of their members, by incorporating these elements into this proposal, the Commission anticipates that the relative cost impact of these proposed rules should be significantly mitigated as compared to the relative cost impact of the proposal in the OCR NPRM.

As stated above, the Commission anticipates potential additional cost savings (as compared to both the existing reporting program, as well as the OCR NRPM) will come through the proposed automated submission of Forms 102, 40, and 71;[111] and, to the extent practicable, the auto-population of previously gathered information. As noted in the FIA comment letter, ''The end result of developing the alternative system could ultimately save the firms (and the Commission) significant time and money by automating the current manual process for filing out and submitting Form 102 information. * * * Once implemented, the average cost savings associated with automating the Form 102 was estimated to be $33,300 per firm on an annual basis.'' That is, electronic submission will allow for increased efficiency for both reporting firms and for the Commission. In addition, the proposed requirement that New Form 102 submissions be updated/refreshed on a regular basis (as proposed, on a semi-annual schedule) would use the previous submission as a template, meaning that for the majority of accounts there should be little or no change to prior reported information, reducing both the update burden on firms and the risk of potential errors in the reporting process.

The Commission proposes that infrastructure requirements for the revised Forms 40 and 102 and the additional Form 71 could be significant,[112] but may be reduced in relationship to the ability of many firms to leverage existing systems to meet the requirements proposed herein. For example, reporting parties for New Form 102, which includes new sections 102A, 102B, and 102S, can be FCMs, foreign brokers, clearing members, and swap dealers. Many of these entities will already have standard data maintenance systems (based on either their own internal recordkeeping process or current reporting obligations other than those proposed herein), and these current systems could be leveraged for reporting purposes. However, because some entities may not have current systems, or only a portion of the necessary infrastructure, the Commission is proposing a phase-in period for compliance with these proposed rules. This period is designed to give entities a window of time for

[109] The estimated total cost includes annual reporting and recordkeeping costs, as well as annualized start-up costs and ongoing operating and maintenance costs. The estimated total costs for each form included in this chart are subject to the limitations described earlier in this section. The estimated total cost for each of New Form 102B, New Form 71 and New Form 40 in this chart represents the estimated total cost of completing Forms 102B and 71 for volume threshold accounts associated with DCMs and SEFs and any resulting Form 40s.

[110] *See supra* section III(C)(ii)–(iii).

[111] The Commission acknowledges that Form 71 is a completely new form, and so it is not meaningful to contrast the costs of this new Form 71 with the ''existing reporting program.'' However, Form 71 would, in effect, replace a portion of the Commission's manual special call process. In that manner, providing for the automated submission of Form 71 does provide a much more efficient information gathering process for both the Commission and market participants, as compared the current efforts required to request and receive analogous information.

[112] *See infra* section VIII(C) for a detailed review of burden and cost estimates been prepared for the purpose of the Commission's responsibilities under the Paperwork Reduction Act.

systems development and to mitigate the cost burdens otherwise associated with a short-run implementation and compliance schedule.

a. New Form 102A

(1) Costs

New Form 102A is directly analogous to the existing Form 102 currently in use, identifying owners and controllers of special accounts with reportable positions (the other sections of the New Form 102 extend the Form to new categories of reportable traders). The requirement to submit a 102A remains the same as that for the current Form 102: a special account can be a position at a reporting entity that is under common control, common ownership, or some combination of common control and common ownership. Because reportable special accounts would not be materially different under the proposed forms and regulations from special accounts as they now exist, the Commission believes the incremental cost of reporting due to account status should be minimal. However, by re-emphasizing that entities must separately identify special accounts under common ownership and those under common control, the Commission may observe an increase in the number of special accounts to be identified at any given reporting entity.

Although the definition of a special account will not change, the level of requested information per account will increase. Proposed Form 102A requests (as applicable) information not currently collected, such as owner and controller NFA ID, LEI, trading account numbers for trading accounts comprising the special account, and DMA status. The commission expects that (as noted by comment letters on the OCR NPRM) the majority of these data points already reside with reporting entities. Depending on the availability of this information, costs may be higher or lower than the estimated average burden of 102A submission.[113]

As noted above, the Commission anticipates that reporting for New Form 102, including Form 102A, will be made primarily through XML data submissions. Form 102A reporting will be triggered once an account becomes a special account (an account ''event'') and updates will be required on at least a semi-annual basis. Standards for the data submission will be flexible, developed in conjunction with market participants' and potential reporting entities' input, and will take into consideration the diversity of reporting entities' systems. Should this Notice lead to a final rule, the Commission will endeavor to provide flexibility in the required information technology systems and to avoid undue burdens for reporting entities, including those with relatively large or relatively small numbers of special accounts.[114] The Commission specifically requests comment on the expected costs related to upgrading or obtaining systems to implement and comply with the reporting requirement under the 102A aspect of the proposal in this Notice.

(2) Benefits

As with costs associated with Form 102A, the reporting benefit is mainly coincident with the benefits of the current reporting regime. However, additions to the form have been made to strengthen the robustness of the Commission's regulatory surveillance capabilities. By collecting information like the trading account numbers comprising a special account, the Commission will be able to compare intra-day account activity with position data held over longer periods of time. This will enable further market transparency and enhanced market review over both macro and micro scales. Micro-structure analysis, the economic analysis of account activity on a highly disaggregated level (such as via individual transactions), was shown to be uniquely helpful in event studies such as the Flash Crash of 2010.[115]

System robustness is also strengthened with the regular update schedule required for all special accounts. Updates provide additional data verification, improving the accuracy of account information on a standard, and sufficiently frequent, schedule. As discussed, automated submission should mean that regular updates come at relatively minimal cost to those reporting.

b. New Form 102B

(1) Costs

As noted above, the Commission has attempted to mitigate the cost to the ultimate reporting entities that provide OCR data for trading accounts (as compared to the proposal in the OCR NPRM), while retaining similar reporting benefits. One significant revision relevant to Form 102B is the introduction of a minimum reporting threshold of 50 contracts in a given product, for any given trading day on any given reporting market that is a DCM or a SEF, as the trigger for required reporting (as compared to no minimum threshold in the OCR NPRM). The Commission believes that this approach would provide sufficient data coverage and benefits, but at a noticeably reduced cost (again, as compared the proposal in the OCR NPRM). In this regard, the FIA comment letter in response to the OCR NPRM noted that:

> Most FCMs found that adopting a volume threshold of 250 contracts per week would decrease significantly the costs of implementing the alternative, by reducing the amount of data required to be processed and the associated cost of transmitting large amounts of data to the exchanges and the Commission. The average estimated cost of populating the OCR database using a volume threshold of 250 contracts per week is $1,783,750. In contrast, the estimated total cost for initially populating the OCR file based on a volume threshold that includes all accounts (referred to in our survey as option 1) is $2,134,375.

Even with this revision, proposed Form 102B does cover a market category not covered under the existing reporting program and so should be considered as an additional cost on any baseline. As with Form 102A, since reporting entities will likely have existing data feed capabilities, a subset of reporting firms will likely not require significant infrastructure development. In particular, the Commission notes that Form 102B reporting firms are limited to clearing member firms, typically among the more technologically-sophisticated participants in the derivatives industry. As with Form 102A, low-volume reporters may choose to submit forms semi-manually through a web-based portal, which will reduce start-up costs but increase costs of individual submissions. Also, as discussed below, the incremental number of additional accounts due to volume reporting may be large. This may translate to significant costs for those who choose a manual submission method. The Commission specifically requests comment on the expected costs related to upgrading or obtaining systems to implement and comply with the reporting requirement under the 102B aspect of the proposal in this Notice.

(2) Benefits

The addition of volume threshold accounts to the reporting structure will provide much needed information about a rapidly growing market segment, that of high volume but low end-of-day position traders. Many of these participants enter and exit a given

[113] *See infra* section VIII(C), which provides burden and costs estimates in the context of a range of underlying factors.

[114] *See infra* section VIII(C), which provides burden and costs estimates related to two distinct submission methods.

[115] See ''Findings Regarding the Market Events of May 6, 2010,'' available at: *http://www.sec.gov/news/studies/2010/marketevents-report.pdf.*

market position intraday, and so are not identified under the current position-reporting regime. The current reporting regime, though it captures over 90 percent of open interest in many markets, is not specifically designed to capture high-volume traders. The Commission anticipates that, with the introduction of volume threshold account reporting, New Form 102B would help provide trader identification for over 90 percent of market activity in many significant products, mirroring the current levels of position identification in the futures market.

In addition to increasing the set of reporting entities on an absolute level, 102B reporting is likely to increase the types of market participants identified to the Commission. For example, it is expected that volume threshold accounts would identify trade ownership and control for market participants such as high-frequency traders (HFTs) and other algorithmic systems; in highly-liquid markets, participants of this type can make up a meaningful percentage of market activity. However, due to the current structure of the reporting system, many participants in these categories do not qualify as reportable special accounts. The 102B would expand the Commission's reporting program to include participant groups of this nature, and would also expand the reporting program to include trading accounts associated with SEFs.

c. New Form 71

(1) Costs

Because the concept behind Form 71 is being introduced for the first time in this Notice, all costs associated with Form 71 reporting are incremental. The form identifies the ownership and control structure of omnibus accounts, from the level of originator to that of sub-account owners and controllers, for volume threshold accounts that are omnibus accounts. The Commission plans to provide a web-based portal for submission and, potentially, an XML submission standard like New Form 102.

Because the structure of omnibus accounts is currently not known by the Commission, it cannot accurately quantify how many additional reports will be necessary due to the introduction of Form 71. However, the Commission has attempted to mitigate the cost of reporting, especially for larger institutions that may have a greater number of relevant accounts. Many of the data fields in Form 71 will be auto-populated with data provided to the Commission on an associated Form 102B or Form 71. This auto-population will be included in the web-based system for the benefit of the reporting party, and is intended to help mitigate, as much as possible, the submission burden. The Commission specifically requests comment on the expected costs related to upgrading or obtaining systems to implement and comply with the reporting requirement under the Form 71 aspect of the proposal in this Notice.

(2) Benefits

Form 71 provides further granularity regarding the ownership hierarchy of omnibus accounts that are volume threshold accounts. Broad collection of omnibus account information can be used to aggregate and analyze all trading by an individual or trading entity, whether through a single account or through a number of accounts held with one or more intermediaries. In the absence of Form 71 information in connection with omnibus volume threshold accounts, the Commission would lose meaningful ownership and control information (and, therefore, usefulness of the 102B reports), including the structure of and dependence on intermediaries within a given market.

d. 102S filings

(1) Costs

The increased relative cost of the 102S filings required in this proposal, as compared to existing 102S filing requirements, should be minimal. This proposal does not amend or change the subset of traders for which swap dealers and clearing members will be required to submit 102S filings. However, by updating existing Form 102 to include 102S filings and by creating a new submission framework for New Form 102, entities submitting 102S filings may encounter costs similar to those encountered by entities filing New Form 102 for other purposes (whether under 102A or 102B). The Commission anticipates that many 102S filing entities will also be submitting New Form 102 in connection with their futures trading business. In addition, the Commission is proposing to work with potential filing entities during the comment period in order to achieve a 102S filing submission process that leverages as much as possible off of the existing infrastructure and practice at reporting entities, including the resources that will be used for analogous futures filings. The Commission specifically requests comment on the expected costs related to upgrading or obtaining systems to implement and comply with the reporting requirement under the 102S aspect of the proposal in this Notice.

(2) Benefits

Form 102S, like 102B, is designed to expand the set of reporting entities beyond those of the current Form 102. The identification of accounts via 102S will provide trader information for participants in swaps. For the purposes of tracking aggregated position exposure in a product or commodity, or market activity of a specific trader, swap reporting significantly extends the Commission's market surveillance capabilities. The inclusion of swap activity aligns with the recently finalized rules on real-time public and regulatory reporting of swap trades, and provides further transparency in what are currently often opaque and/or over-the-counter markets. As further changes arise in the commodity swap market, such as the introduction of SEFs, special account identification will allow universal market monitoring of activity across traditional futures exchanges and SEFs. This can provide quantifications of the balance of activity in a given product across different execution platforms and changes in this balance over time. In addition, disruptive market activity transferred across multiple trading facilities could now be more easily, and more quickly, identified with the information requested in 102S filings.

e. New Form 40

(1) Costs

The proposed changes to Form 40 extend the level of information collected about account ownership and the business practices of reporting traders. Given the new subsections of New Form 102 (*i.e.,* 102A, 102B, and 102S, as well as Form 71), the number of traders required to submit a Form 40 is likely to increase. As with existing Form 40, New Form 40 will be required from a wide range of market participants (from individual traders up to large financial institutions). Because of this wide range of form respondents, New Form 40, like Form 71, will be offered in a web-based format, and will be auto-populated with the related account information provided on the associated New Form 102 or Form 71, as applicable. Because of the more detailed questions in New Form 40, as compared to existing Form 40, the initial reporting burden per form is likely to increase beyond the estimate for the current form.[116] However, necessary updates may occasion a

[116] *See infra* section VIII(C).

reduced incremental burden, given the introduction of an electronic submission format through a portal that stores prior form submissions. The Commission specifically requests comment on the expected costs related to implementing and complying with the reporting requirement under the New Form 40 aspect of the proposal in this Notice.

(2) Benefits

Through the expansion of Form 40, the Commission will have more detailed data on reporting traders, including information regarding reporting trader's control relationships with other entities and other relationships with persons that influence or exercise authority over the trading of a reporting trader. This data set will include an expansion of the list of business purposes for futures and swaps activity and requests for detailed information about the business sector and physical commodity market participation of a given trader. Responses to these questions can provide a broader view concerning relationships and relative interest in related markets by business sector, and overlaps in activity across different product groups. It can also provide the Commission a check, or confirmation, to assess whether market activity matches the self-reported trading goals of a reporting trader.

f. 40S filings

(1) Costs

The increased relative cost of the 40S filings in this proposal, as compared to existing 40S filing requirements, should be minimal. This proposal does not amend or change the subset of traders who will be required to submit 40S filings, and the existing 40S filings must be completed using existing Form 40. By updating existing Form 40 questions and providing for web-based form submission, the Commission does not anticipate any significant increase or change in costs related to the 40S filing provisions of this Notice. The Commission specifically requests comment on the expected costs related to implementing and complying with the reporting requirement under the 40S filing aspect of the proposal in this Notice.

(2) Benefits

Similar to the New Form 40 benefits discussion above, 40S filings under this proposal would provide the Commission with a broader view (as compared to existing Form 40 and 40S filings) concerning relative interest in related markets by business sector, and overlaps in activity across different product groups. It can also provide the agency a means to check that observed market activity matches the self-reported trading goals of the entity.

iii. Section 15(a) Factors

a. Protection of Market Participants and the Public

Although potentially costly, the Commission proposes that the data collection under these rules and forms are necessary to assist the Commission in protecting market participants and the public by, inter alia: identifying as many accounts as feasible that are under common ownership or control; identifying trading accounts whose owners or controllers are also included in the Commission's large trader reporting program or that demonstrate independently significant trading activity; and identifying the entities or persons which the Commission should contact if additional information is required, including the owner and controller, and related contact persons, for reported accounts and traders.

The Commission proposes that revised Form 102 will protect market participants and the public by expanding data collection in three major areas: (1) By providing additional information regarding special accounts reported on 102A, including the trading accounts that comprise a special account; (2) by increasing the number of identified futures, options, and swaps accounts through the new volume threshold trigger in 102B; and (3) by identifying ownership and control information for a new market sector, that of swaps.

The proposed rule will protect market participants and the public by permitting the Commission to integrate transactions (and associated trading accounts) identified on daily trade capture reports with special accounts holding reportable positions; identifying traders of all sizes whose open interest does not reach reportable levels, but whose intra-day trading reaches significant levels and may adversely affect markets during concentrated periods of intra-day trading; reducing the time-consuming process of requesting and awaiting information from outside the Commission to identify the entity associated with a given trading account number on a trade capture report and aggregating all identified entities that relate to a common owner; linking traders' intra-day transactions with their end-of-day special account positions; calculating how different categories of traders contribute to market-wide open interest; and categorizing market participants based on their actual trading behavior on a contract-by-contract basis, supplementing the self-reported classifications on Form 40.

The proposed forms will be submitted in either an XML-based data feed or via a web-based submission. This modifies the process of form submission from the current manual systems at both the Commission and reporting entities. As compared to manual entry, automated systems should decrease the possibility of transcription error or errors in cross identification and reduce labor costs, aiding the accuracy and efficiency of agency market monitoring and enforcement.

Additional identifiers, such as those requested in New Form 102, will also allow for data integrity checks within and between the Commission's databases. For example, requests for NFA and LEI numbers provide independently assigned identifiers for ownership hierarchy verification. Also, New Form 40 information will be a direct check on much of the ownership and control information provided on New Form 102. In sum, the proposed rules would greatly increase the ability of the Commission to carry out its regulatory function and its protection of the public in an efficient manner. By leveraging available technology, these revisions should ultimately mitigate the long term cost to market participants of providing the requested information.

b. Efficiency, Competitiveness, and Financial Integrity of the Markets

Collecting ownership and control information for the identified market participants allows the Commission to aggregate positions for a specific underlying trader across multiple products and markets and to identify aggregate activity levels. This identification provides additional market transparency for regulators and a clearer quantification of risk within and across firms, aiding the surveillance and monitoring functions of the Commission. Thus, while done at a cost, as described above, it aids in monitoring, over longer periods of time, risk exposure by institution, market class, or asset class. The proposed forms also allow for easy identification of the individual, or individuals, to be contacted if additional transaction information is needed for further review. As noted in a comment letter from the Petroleum Marketers Association of America (PMAA) on the OCR NRPM, ''Efficient integration of large trader and trade register data from DCMs, ECMS, and [other markets] will improve market transparency and ensure that no one trader, investment fund or other entity controls a large

percentage of the interest on commodity futures exchanges. Increased reporting requirements will help to identify those who possibly attempt to corner the market by taking huge positions in the futures markets which can move futures prices beyond what supply and demand fundamentals dictate.'' Similarly, the Air Transport Association (ATA) included a list of market and regulatory benefits of the ownership and control report, including allowing staff to aggregate trading accounts under common ownership or control, allowing large trader reports and exchange trade registers to be linked, allowing expanded oversight of trading by widely dispersed individuals and accounts, helping staff link traders' intra-day transactions with end-of-day positions, assisting investigations into intra-day manipulation and other trade practice abuses, and, bridging gaps in current data reporting systems.

Under the proposed rules, strengthened ties between end-of-day position and trade execution account registers received by the Commission can allow for a more accurate and timely accounting of market position by account. In addition, the increased depth of trader information allows for more robust research and analytics, encompassing a much greater segment of market volume traded on exchange platforms. The additional information could also aid in anticipating and/or monitoring market disruptions that can come at high costs to the investing and general public.

c. Price Discovery

The Commission does not anticipate that the proposed rules will have an impact on price discovery in markets regulated by the Commission.

d. Sound Risk Management Procedures

The expansion of both requested information and reportable accounts in the proposed forms requires firms to collect more information on each threshold account for appropriate risk monitoring. While the technology and personnel required for this collection will come at some cost to both market participants and the Commission, as described above, this collection of information is of benefit not just for regulatory oversight but for effective internal risk management at the level of the firm. Identification of account control and related contact information can provide timely responses to market disruptive events from multiple parties. It can also allow for prophylactic classification of market categories which could provide unique risks to market systems.

One specific area for which enhanced monitoring may be of benefit is that of direct market access (DMA). Briefly, DMA allows a trading entity to submit orders directly to an exchange matching engine. It is anticipated that this decreased distance between trade entry and ultimate execution on the exchange may carry additional transaction risk. A recent IOSCO report [117] notes that direct market access could implicitly contain any of the following market risks: (1) A user may access markets outside of the infrastructure and/or control of market intermediaries, (2) there may be an incentive for intermediaries/customers to gain execution advantages based on the type and geographic location of their connectivity arrangements, and (3) algorithmic trading through automated systems may imply issues of capacity and the potential need for rationing bandwidth. Similarly, a CSA Report outlined the risks associated with dealers/exchanges providing DMA to clients/customers, including risks to market integrity and to related technological systems.[118] The Commission feels it is useful, from both a market monitoring and analysis standpoint, to identify those accounts which have been provided with this enhanced trading capability. Highlighting potential concerns with market integrity, both at the firm and at the exchange level, will be aided by knowledge of non-intermediated access.

e. Other Public Interest Considerations

Form 40 now contains the relevant North American Industry Classification System (NAICS) categories to aid in business sector identification. The form includes two other selection lists: (1) Commodity groups and individual commodities (a classification defined by the CFTC) and (2) trading purposes that further detail the business practices of a reporting firm. These identifications can aid in analytical studies (developing categories of trading activity beyond those currently used by the agency), in cross-validation of trading intent, and in analysis of risk exposure across business sectors.

In addition, and as discussed throughout this document, the move to electronic submission of the forms addressed by these proposed rules will increase efficiencies for both market participants and the Commission. Specifically, data will be more reliable, will be received and reviewed faster, and will be capable of being updated faster than in the current paper based submission process. By embracing available technology to carry out its surveillance and market monitoring functions in this manner, market participants and the public will benefit from a more efficient and effective Commission.

The Commission specifically requests comment on its cost and benefit considerations of the proposed rules, as discussed above, and the proposed rule's impact (or the relative impact of any alternative rules) on: (1) The protection of market participants and the public; (2) the efficiency, competitiveness, and financial integrity of the futures markets; (3) the market's price discovery functions; (4) sound risk management practices; and (5) other public interest considerations.

B. Regulatory Flexibility Analysis

The Regulatory Flexibility Act (''RFA'') requires that agencies consider whether the rules they propose will have a significant economic impact on a substantial number of small entities and, if so, provide a regulatory flexibility analysis regarding the impact.[119] A regulatory flexibility analysis or certification is typically required for ''any rule for which the agency publishes a general notice of proposed rulemaking'' pursuant to the notice-and-comment provisions of the Administrative Procedure Act, 5 U.S.C. 553(b).[120]

The rules proposed in this Notice would require FCMs, clearing members, foreign brokers, swap dealers and other reporting traders (including natural persons) to complete New Forms 102 or 71, and to submit them to the Commission as specified in the proposes rules or upon special call by the Commission. The Commission has previously determined that FCMs, clearing members, foreign brokers, swap dealers, and natural persons are not small entities for purposes of the RFA.[121] Accordingly, the rules proposed in this Notice with respect to Forms 102 and 71 would not have a significant economic impact on a substantial number of small entities.

The proposed rules would also require certain reporting traders to complete and submit New Form 40

[117] *See http://www.iosco.org/library/pubdocs/pdf/IOSCOPD332.pdf.*

[118] *See http://www.osc.gov.on.ca/documents/en/Securities-Category2/ni_20110408_23–103_pro-electronic-trading.pdf.*

[119] 5 U.S.C. 601 *et seq.*

[120] 5 U.S.C. 601(2), 603, 604 and 605.

[121] *See* respectively and as indicated: 47 FR 18618 (April 30, 1982) (FCMs and large traders); 72 FR 34417 at 34418 (June 22, 2007) (foreign brokers); 76 FR 71626 at 71680 (November 18, 2011) (swap dealers); and 76 FR 71626 at 71680 (November 18, 2011) and 76 FR 43851 at 43860 (July 22, 2011) (clearing members). *See also* 5 U.S.C. 601(6) (natural persons are not entities for purposes of the RFA).

upon special call by the Commission. Some of these reporting traders may be ''small entities'' under the RFA. In 2010, the Commission required approximately 3,320 reporting traders to complete a Form 40, from a total population of approximately 10,000 reporting traders. Of these 3,320 Form 40s, approximately 2,500 were completed by institutions, a portion of which could potentially be small entities under the RFA. For example, the Commission has received comments on its Dodd-Frank Act rulemakings indicating that certain entities that may be required to comply with the reporting and recordkeeping requirements in this Notice have been determined by the Small Business Administration to be small entities. In particular, the Commission understands that some not-for-profit electric generators, transmitters, and distributors that may be required to comply with the proposed rules have been determined to be small entities by the SBA, because they are ''primarily engaged in the generation, transmission, and/or distribution of electric energy for sale and [their] total electric output for the preceding fiscal year did not exceed 4 million megawatt hours.'' [122]

The Commission believes that, due to the limited number of institutions likely to receive a New Form 40 request in any given year, as well as the limited nature of the New Form 40 reporting burden, the rules proposed in this Notice with respect to New Form 40 would not have a significant economic impact on a substantial number of small entities. New Form 40 would not be required on a routine and ongoing basis, but rather would be sent by the Commission on a discretionary basis in response to the reporting of an account that reaches a minimum position or volume threshold. As summarized above, in 2010 the Commission made Form 40 requests to only 25% of all reporting traders that could potentially be small entities; furthermore, some of these reporting traders were not in fact small entities. As a result, New Form 40 would be expected to affect only a small subset of the entities that may be small entities under the RFA. In addition, New Form 40 is not lengthy or complex, and would require reporting traders to provide only limited information to the Commission. The Commission estimates that a reporting trader would require only 3 hours to complete a New Form 40.

The rules proposed in this Notice regarding revised § 18.05 would also impose books and records obligations upon a new category of market participants—specifically, certain owners (but not controllers) of a volume threshold account or a reportable sub-account. Such owners may be small entities under the RFA. The Commission does not believe that the obligation to maintain books and records under revised § 18.05 would impose significant costs on the additional small entities subject to the recordkeeping requirements of such section. The Commission expects that such account owners may largely rely on the books and records that they maintain in the ordinary course of business to fulfill the requirements of revised § 18.05. The Commission also expects that a portion of the account owners subject to revised § 18.05 are subject to the position-based recordkeeping requirements of current § 18.05,[123] and would not incur significant costs expanding their recordkeeping practices to comply with revised § 18.05. To the extent that certain small entities are required to modify their practices to comply with the volume-based recordkeeping requirements of revised § 18.05, the Commission believes that this will not impose a significant economic burden, because this requirement would: (a) Ensure that (i) owners of volume threshold accounts and reportable sub-accounts and (ii) owners of reportable positions are subject to equivalent recordkeeping obligations under § 18.05, and therefore maintain books and records in a consistent format; and (b) promote the Commission's market surveillance and investigatory functions to better deter price manipulation and other disruptions of market integrity.

Accordingly, for the reasons set forth above, the Chairman, on behalf of the Commission, hereby certifies pursuant to 5 U.S.C. 605(b) that the rules proposed in this Notice would not have a significant economic impact on a substantial number of small entities. The Commission invites public comment on this determination.

C. Paperwork Reduction Act

i. Overview

The Paperwork Reduction Act (''PRA'') [124] imposes certain requirements on Federal agencies in connection with their conducting or sponsoring any collection of information as defined by the PRA. An agency may not conduct or sponsor, and a person is not required to respond to, a collection of information unless it displays a currently valid control number. This proposed rulemaking would result in new collection of information requirements within the meaning of the PRA. The Commission is therefore submitting this proposal to the Office of Management and Budget (''OMB'') for review in accordance with 44 U.S.C. 3507(d) and 5 CFR 1320.11. The title for this collection of information is ''Trader and Account Identification Reports'' (OMB control number 3038–NEW). If adopted, responses to this collection of information would be mandatory. The Commission would protect proprietary information in accordance with the Freedom of Information Act and 17 CFR part 145, ''Commission Records and Information.'' In addition, § 8(a)(1) of the Act strictly prohibits the Commission, unless specifically authorized by the Act, from making public ''data and information that would separately disclose the business transactions or market positions of any person and trade secrets or names of customers.'' [125] The Commission is also required to protect certain information contained in a government system of records according to the Privacy Act of 1974, 5 U.S.C. 552a.

The proposed rulemaking would create new information collection requirements via proposed §§ 17.01, 18.04, 18.05, and 20.5. Currently, OMB control number 3038–0009 covers, among other things, the collection requirements arising from existing §§ 17.01, 18.04, and 18.05.[126] Also, OMB control number 3038–0095 covers, among other things, the collection requirements arising from existing § 20.5.[127] Accordingly, the Commission is requesting a new OMB control number for the purpose of consolidating the collections into a common control number. Collection requirements arising from proposed §§ 17.01, 18.04, 18.05, and 20.5 would be covered by 3038–NEW. Once the collections covered by control number 3038–NEW become operational, OMB control number 3038–0009 would no longer cover collection requirements arising from §§ 17.01, 18.04, and 18.05. In addition, OMB control number 3038–0095 would no longer cover collection requirements arising from § 20.5. The remaining collection requirements covered by

[122] Small Business Administration, *Table of Small Business Size Standards* (Nov. 5, 2010). *See also* the regulatory flexibility analysis regarding such entities in 77 FR 1182 at 1240 (January 9, 2012), 77 FR 2136 at 2170 (January 13, 2012), and 77 FR 2613 at 2620 (January 19, 2012).

[123] 17 CFR 18.05.

[124] 44 U.S.C. 3501 *et seq.*

[125] 7 U.S.C. 12(a)(1).

[126] 17 CFR 17.01, 18.04 and 18.05.

[127] 17 CFR 20.5.

3038–0009 and 3038–0095 would not be affected.

ii. Information To Be Provided

Proposed § 17.01 would result in the collection of information regarding the following types of accounts: (a) Special accounts (as defined in existing § 15.00(r)); [128] and (b) volume threshold accounts, omnibus volume threshold accounts, and omnibus reportable sub-accounts (each as defined in proposed § 15.00). Specifically, proposed § 17.01 would provide for the filing of New Form 102A, New Form 102B and New Form 71, as follows:

1. Pursuant to proposed § 17.01(a), FCMs, clearing members, and foreign brokers would identify new special accounts to the Commission on New Form 102A; [129]

2. Pursuant to proposed § 17.01(b), clearing members would identify volume threshold accounts to the Commission on New Form 102B; [130] and

3. Pursuant to proposed § 17.01(c), omnibus volume threshold account originators and omnibus reportable sub-account originators would identify reportable sub-accounts to the Commission on New Form 71 when requested via a special call by the Commission or its designee.[131]

Additional reporting requirements would arise from proposed § 18.04, which would result in the collection of information from and regarding traders who own, hold, or control reportable positions; volume threshold account controllers; persons who own volume threshold accounts; reportable sub-account controllers; and persons who own reportable sub-accounts. Specifically, proposed § 18.04 would provide for the filing of New Form 40, as follows:

1. Pursuant to proposed § 18.04(a), a trader who owns, holds, or controls a reportable position would file New Form 40, when requested via a special call by the Commission or its designee; and

2. Pursuant to proposed § 18.04(b), a volume threshold account controller, person who owns a volume threshold account, reportable sub-account controller, and person who owns a reportable sub-account would file New Form 40 when requested via a special call by the Commission or its designee.[132]

Reporting requirements would also arise from proposed § 20.5(a), which would require all reporting entities to submit 102S filings for swap counterparty or customer consolidated accounts with reportable positions.[133] In addition, existing § 20.5(b) requires every person subject to books or records under existing § 20.6 to complete a 40S filing after a special call upon such person by the Commission.[134] However, existing § 20.5(b) also provides that a 40S filing shall consist of the submission of Form 40. As discussed above, the proposed rules provide for the creation of New Form 40, which would expand and replace existing Form 40. Accordingly, the proposed rules would require additional information from 40S filers.

In addition to the reporting requirements summarized above, proposed § 18.05 would impose recordkeeping requirements for: (1) Traders who own, hold, or control a reportable futures or option position; (2) volume threshold account controllers; (3) persons who own volume threshold accounts; (4) reportable sub-account controllers; and (5) persons who own reportable sub-accounts. These provisions extend the recordkeeping requirements of current § 18.05, which are applicable to traders who hold or control reportable positions in futures contracts, to owners and controllers of accounts with reportable trading volume.[135]

iii. Reporting and Recordkeeping Burdens

Set forth below is the estimated total annual industry cost for affected participants to (i) complete Forms 102A and 102S and any resulting Form 40s, (ii) complete Forms 102B and 71 for volume threshold accounts associated with DCMs and SEFs and any resulting Form 40s, and (iii) comply with the books and records obligations arising from proposed § 18.05:

Regulation	Associated Report	Estimated Total Cost[136]
17.01(a)	New Form 102A	$ 2,083,165
17.01(b)	New Form 102B	$ 1,458,216
17.01(c)	New Form 71	$ 446,505
18.04(a)	New Form 40	$ 1,238,108
18.04(b)	New Form 40	$ 3,195,497
18.05	Books and Records	$ 214,605
20.5(a)	102S Filing	$ 393,050
20.5(b)	40S Filing	$ 117,915
Total Reporting and Recordkeeping Costs		$ 9,147,061

[128] 17 CFR 15.00(r).

[129] *See supra* sections III(A) and IV(A) for a description of existing Form 102 and a comparison to New Form 102A.

[130] *See supra* section IV(B) for a description of New Form 102B.

[131] *See supra* section IV(D) for a description of New Form 71.

[132] *See supra* sections III(A) and IV(E) for a description of existing Form 40 and a comparison to New Form 40.

[133] ''Reporting entity,'' ''counterparty,'' and ''consolidated account'' are each defined in § 20.1 of the Commission's regulations. *See supra* sections III(B) and IV(C) for a description of 102S.

[134] 17 CFR 20.5(b) and 20.6. *See supra* sections III(B) and IV(E) for a description of 40S.

[135] 17 CFR 18.05.

[136] The estimated total cost includes annual reporting and recordkeeping costs, as well as annualized start-up costs and ongoing operating and maintenance costs. The estimated total costs for each form included in this chart are subject to the limitations described in section VIII(A), above. The estimated total cost for each of New Form 102B, New Form 71 and New Form 40 in this chart represents the estimated total cost of completing Forms 102B and 71 for volume threshold accounts associated with DCMs and SEFs and any resulting Form 40s.

Total reporting and recordkeeping costs for the proposed rules reflect the sum of estimated burdens, multiplied by the wage rate provided below, for: (1) New Form 102A; (2) New Form 102B; (3) New Form 71; (4) New Form 40 (pursuant to 18.04(a)); [137] (5) New Form 40 (pursuant to 18.04(b)); [138] (6) the reporting and recordkeeping requirements of proposed § 18.05; (7) 102S filings; and (8) 40S filings. However, the Commission notes that reporting and recordkeeping burdens arising from each regulation and associated form were estimated independently of the requirements of the other regulations and associated forms, and that substantial synergies are likely to exist across the systems and data necessary to meet the reporting requirements. As a result, the total reporting and recordkeeping costs for the proposed rules are likely to be substantially lower than estimated. For example, many reporting firms filing New Form 102A would also file New Form 102B, and would be able to leverage systems and information necessary for filing one form to meet the requirements of the other. Accordingly, total reporting and recordkeeping costs are likely to be lower than the sum of the costs associated with each form individually, as the Commission has calculated herein.

All burden estimates assume that information required by each form is generally available within the reporting entity; however, in preparing its estimates, the Commission did make an effort to account for the added burden associated with assembling data distributed among multiple systems and/or databases within a reporting entity.

a. Reporting Burdens

Proposed § 17.01(a)—New Form 102A: The Commission estimated the reporting burden associated with this proposed regulation by considering the two distinct filing methods that it will accommodate should a final rule be adopted. With two methods of submission, reporting entities (*i.e.,* FCMs, clearing members, and foreign brokers) would have the flexibility to select the submission method that works best with their existing data and technology infrastructure and the number of filings they expect to make. In general, the Commission believes that Method 1 would be more cost effective for reporting entities with a large number of filings, while Method 2 would be more cost effective for reporting entities with a small number of filings.

Method 1: This method assumes that each reporting entity would use an automated program to submit its New Form 102As via secure FTP. Each Method 1 submission would likely contain numerous 102A records. The Commission estimates that the total initial development burden would average 264 hours per reporting entity. The Commission also estimates that the highly automated nature of this option would virtually eliminate the marginal costs associated with each additional submission or each additional record contained in a submission. Accordingly, the Commission estimates that 102A change and refresh updates would not increase a reporting entity's burden when using Method 1. The Commission further estimates that ongoing operation and maintenance costs would average 53 hours per year no matter how many records are contained in a submission. The total Method 1 annualized development burden and the ongoing operation and maintenance cost burden (total yearly costs) would equal approximately 106 hours per reporting entity.[139]

A recent assessment of Commission data collection efforts demonstrated that the Commission receives Form 102 submissions from approximately 250 reporting entities annually. The Commission anticipates that it would receive New Form 102A submissions from a similar number of reporting entities. Assuming all New Form 102A reporting entities utilize Method 1, the Commission estimates that the total annual industry burden for New Form 102A would equal 26,500 hours. Using an estimated wage rate of $78.61 per hour,[140] annual costs for 102A filings made pursuant to Method 1 are estimated at $2,083,165.[141]

Method 2: This method assumes that each reporting entity would complete and submit each New Form 102A online via a secure portal provided by the Commission. The Commission estimates that the total initial development burden would average 20 hours per New Form 102A record. The Commission also estimates that annual ongoing costs, which include change and refresh filings, would average 7 hours per year for each New Form 102A record. The estimated Method 2 total annualized development burden and the ongoing operation and maintenance cost burden (total yearly cost) equals approximately 11 hours per New Form 102A record.[142]

A recent assessment of Commission data collection efforts demonstrated that the Commission receives approximately 4,700 Form 102 records annually. However, by reiterating that Commission regulations require reporting firms to separately aggregate positions by common ownership and by common control for the purpose of identifying and reporting special accounts, the Commission may observe an increase in the number of 102A filings. The Commission anticipates that the number of annual New Form 102A records may increase by 75% to 8,225.[143] Assuming each of the 8,225 New Form 102A records are provided via Method 2, the Commission estimates that the total annual industry burden for New Form 102A would equal 90,475 hours. Using an estimated wage rate of $78.61 per hour, annual costs for 102A filings made pursuant to Method 2 are estimated at $7,112,240.[144]

The Commission understands that providing filing options to the industry should lower costs relative to failing to provide such options. Because of this, estimated total costs to the industry for 102A filings should be lower than any cost associated with mandating either Method 1 or Method 2. Given the cost estimates for the two individual

[137] 17 CFR 18.04(a).

[138] 17 CFR 18.04(b).

[139] All annualized development burden estimates are based on 5 year, straight line depreciation. The 106 hour figure is arrived at by dividing 264 hours (initial development burden per reporting entity) by 5 years, which results in an estimated annualized initial development burden of 52.8 hours per reporting entity. 52.8 hours plus 53 hours (annualized ongoing operation and maintenance costs per reporting entity) equals 106 hours per reporting entity.

[140] The Commission staff's estimates concerning the wage rates are based on salary information for the securities industry compiled by the Securities Industry and Financial Markets Association (''SIFMA''). The $78.61 per hour is derived from figures from a weighted average of salaries and bonuses across different professions from the SIFMA Report on Management & Professional Earnings in the Securities Industry 2010, modified to account for an 1800-hour work-year and multiplied by 1.3 to account for overhead and other benefits. The wage rate is a weighted national average of salary and bonuses for professionals with the following titles (and their relative weight): ''programmer (senior)'' (30% weight); ''programmer'' (30% weight); ''compliance advisor (intermediate)'' (20%), ''systems analyst'' (10%), and ''assistant/associate general counsel'' (10%).

[141] The $2,083,165 figure is arrived at by multiplying 106 hours by 250 reporting entities (equals 26,500 hours) by $78.61 (equals $2,083,165).

[142] All annualized development burden estimates are based on 5 year, straight line depreciation.

[143] The Commission believes that about 25% of special accounts reported on Form 102 have the same owner and controller. In such case, the reporting entity need only submit one New Form 102. Accordingly, the annual number of New Form 102A records would increase, as compared to current annual Form 102 submissions, only to the extent that the owner and the controller of a special account are different.

[144] The $7,112,240 figure is arrived at by multiplying 11 hours by 8,225 records (equals 90,475 hours) by $78.61 (equals $7,112,240).

methods discussed above, the Commission anticipates 102A filing costs to be no more than approximately $2,083,165 (Method 1), the lower of the two estimated filing methods. In developing this estimate, the Commission does not make any assumptions about the behavior of an individual reporting entity. Reporting entities, given their own individualized needs, are assumed to make the most cost-effective choice for them, which may be any one of the two methods.

Proposed § 17.01(b)—New Form 102B: The Commission estimated the reporting burden associated with this proposed regulation by considering the two distinct filing methods that it will accommodate should a final rule be adopted. With two methods of submission, reporting entities (*i.e.,* clearing members) will have the flexibility to select the submission method that works best with their existing data and technology infrastructure and the number of filings they expect to make. In general, the Commission believes that Method 1 would be more cost effective for reporting entities with a large number of filings, while Method 2 would be more cost effective for reporting entities with a small number of filings.

Method 1: This method assumes that each reporting entity would use an automated program to submit its 102B filings via secure FTP. Each Method 1 submission would likely contain numerous 102B records. The Commission estimates that the total initial development burden should average 264 hours per reporting entity. The Commission also estimates that the highly automated nature of this option would virtually eliminate the marginal costs associated with each additional submission or each additional record contained in a submission. Accordingly, the Commission estimates that 102B change and refresh updates will not increase a reporting entity's burden when using Method 1. The Commission further estimates that ongoing operation and maintenance costs would average 53 hours per year no matter how many records are contained in a submission. The total Method 1 annualized development burden and the ongoing operation and maintenance cost burden (total yearly costs) equals approximately 106 hours per reporting entity.[145]

Because New Form 102B provides a new volume-based reporting structure not found in existing Form 102, the Commission is unable to refer to historical reporting statistics. Instead, the Commission estimated the number of New Form 102B reporting entities by estimating the number of clearing members associated with trading accounts that the Commission projects will qualify as volume threshold accounts. For volume threshold accounts associated with DCMs, the Commission anticipates that it would receive New Form 102B submissions from approximately 100 reporting entities annually. For volume threshold accounts associated with SEFs, the Commission anticipates that it would receive New Form 102B submissions from approximately 75 reporting entities annually. Assuming that all Form 102B reporting entities for volume threshold accounts associated with DCMs utilize Method 1, the Commission estimates that the total annual industry burden for the reporting of such accounts on New Form 102B would equal 10,600 hours.[146] Assuming that all Form 102B reporting entities for volume threshold accounts associated with SEFs utilize Method 1, the Commission estimates that the total annual industry burden for the reporting of such accounts on New Form 102B would equal 7,950 hours.[147] Using an estimated wage rate of $78.61 per hour, annual costs for DCM-related 102B filings made pursuant to Method 1 are estimated at $833,266, while annual costs for SEF-related 102B filings made pursuant to Method 1 are estimated at $624,950.[148] Collectively, annual costs for 102B filings made pursuant to Method 1 are estimated at $1,458,216.

Method 2: This method assumes that each reporting entity would complete and submit each New Form 102B online via a secure portal provided by the Commission. The Commission estimates that the total initial development burden would average 20 hours per New Form 102B record. The Commission also estimates that annual ongoing costs, which include both change and refresh updates, would average 7 hours per year for each New Form 102B record. The estimated Method 2 total annualized development burden and the ongoing operation and maintenance cost burden (total yearly cost) equals approximately 11 hours per New Form 102B record.[149]

Because New Form 102B provides a new volume-based reporting structure not found in existing Form 102, the Commission is unable to refer to historical reporting statistics to directly estimate the number of New Form 102B records it might receive. Instead, the Commission estimated the number of distinct volume threshold accounts across a sample of several contract markets, and then extrapolated the total number of volume threshold accounts across all markets. For volume threshold accounts associated with DCMs, the Commission anticipates that it would receive approximately 126,000 New Form 102B records annually. For volume threshold accounts associated with SEFs, the Commission anticipates that it would receive approximately 62,015 New Form 102B records annually. Assuming each New Form 102B record for a volume threshold account associated with a DCM is provided via Method 2, the Commission estimates that the total annual industry burden for the reporting of such accounts on New Form 102B would equal 1,386,000 hours. Assuming each New Form 102B record for a volume threshold account associated with a SEF is provided via Method 2, the Commission estimates that the total annual industry burden for the reporting of such accounts on New Form 102B would equal 682,165 hours. Using an estimated wage rate of $78.61 per hour, annual costs for DCM-related 102B filings made pursuant to Method 2 are estimated at $ 108,953,460,[150] while annual costs for SEF-related 102B filings made pursuant to Method 2 are estimated at $53,624,991.[151] Collectively, annual costs for 102B filings made pursuant to Method 2 are estimated at $162,578,451.

The Commission understands that providing filing options to the industry should lower costs relative to failing to provide such options. Because of this, estimated total costs to the industry for 102B filings should be lower than any cost associated with mandating either Method 1 or Method 2. Given the cost estimates for the two individual methods discussed above, the Commission anticipates DCM and SEF-related 102B filing costs to be no more than approximately $1,458,216 (Method 1), the lower of the two estimated filing

[145] All annualized development burden estimates are based on 5 year, straight line depreciation.

[146] The 10,600 hour figure is arrived at by multiplying 106 hours (annualized development burden and ongoing operation and maintenance cost burden per reporting entity) by 100 reporting entities.

[147] The 7,950 hour figure is arrived at by multiplying 106 hours (annualized development burden and ongoing operation and maintenance cost burden per reporting entity) by 75 reporting entities.

[148] The $833,266 figure is arrived at by multiplying 10,600 by $78.61, while the $624,950 figure is arrived at by multiplying 7,950 by $78.61.

[149] *Id.*

[150] The $108,953,460 figure is arrived at by multiplying 11 hours by 126,000 records (equals 1,386,000 records) by $78.61 (equals $108,953,460).

[151] The $53,624,991figure is arrived at by multiplying 11 hours by 62,015 records (equals 682,165 records) by $78.61 (equals $53,624,991).

methods. In developing this estimate, the Commission does not make any assumptions about the behavior of an individual reporting entity. Reporting entities, given their own individualized needs, are assumed to make the most cost-effective choice for them, which may be any one of the two methods.

Proposed § 17.01(c)—New Form 71: New Form 71 reporting entities (*i.e.,* originators of omnibus volume threshold accounts or omnibus reportable sub-accounts) would, upon special call by the Commission or its designee, complete and submit New Form 71 online via a secure portal provided by the Commission. The Commission estimates that, on average, New Form 71 would create an annual reporting burden of 8 hours per filing. The Commission notes that New Form 71 filings do not require change or refresh updates. Accordingly, the burdens and costs associated with such updates in the case of other forms proposed herein are not relevant to the calculation of burdens and costs for New Form 71 filings. The Commission also notes that it is likely to request the resubmission of New Form 71 filings annually.

The number of New Form 71 filings per year would vary according to the number of special calls for the form made by the Commission. In order to estimate the annual number of New Form 71 filings (*i.e.,* the number of special calls made), the Commission considered the number of existing Form 102 omnibus special accounts and estimated that New Form 102B would capture a similar number of DCM-related omnibus volume threshold accounts.[152] Further, the Commission estimated that it would require a New Form 71 for every such omnibus volume threshold account. Commission records indicate 526 omnibus special accounts in 2010, and the Commission anticipates an equal number of DCM-related omnibus volume threshold accounts. Because the Commission does not presently receive filings pertaining to SEF-related omnibus volume threshold accounts, the Commission is unable to refer to historical reporting statistics to directly estimate the number New Form 71 filings it might require. To estimate the number of SEF-related omnibus volume threshold accounts, the Commission assumed that SEF transactions will likely be intermediated to a lesser extent than DCM transactions. The Commission estimates that there may be 35 percent as many SEF-related omnibus volume threshold accounts as DCM-related omnibus volume threshold accounts. Accordingly, the Commission estimates that there will be 184 SEF-related omnibus volume threshold accounts. Based on an estimated 526 DCM-related New Form 71 filings per year, the Commission estimates an aggregate reporting burden of 4,208 hours annually for such filings. Based on an estimated 184 SEF-related New Form 71 filings per year, the Commission estimates an aggregate reporting burden of 1,472 hours annually for such filings. Using an estimated wage rate of $78.61 per hour, annual costs for DCM-related New Form 71 filings are estimated at $330,791, while annual costs for SEF-related New Form 71 filings are estimated at $115,714. Collectively, annual costs for New Form 71 filings are estimated at $446,505.

Proposed § 18.04(a)—New Form 40: New Form 40 reporting entities arising from New Form 102A filings (*i.e.,* special account owners and controllers) would, upon special call by the Commission, complete and submit New Form 40 online via a secure portal provided by the Commission. The Commission's special call would typically be in the form of an email request that would contain a URL for the portal, and a unique login and password for access to the portal.

The number of New Form 40 filings arising from New Form 102A filings would vary according to the number of special calls made by the Commission. An analysis of the Commission's existing Form 40 practices demonstrates that the Commission makes approximately 3,000 special calls annually. However, as explained above, the Commission is reiterating that its regulations require reporting firms to separately aggregate positions by common ownership and by common control for the purpose of identifying and reporting special accounts. The Commission anticipates that the number of special calls made annually as a result of New Form 102A filings may increase by 75 percent. The Commission estimates that New Form 40 would result in annual filings from 5,250 reporting entities.

The Commission estimates that each filing estimated above would require 3 hours to complete,[153] resulting in an estimated total annual reporting burden of 15,750 hours. Using an estimated wage rate of $78.61 per hour, annual costs for New Form 40 filings arising from New Form 102A filings are estimated at $1,238,108.[154] Because the proposed rules anticipate a web-based portal and user profile system, those entities required to complete a New Form 40 would also be under a continuing obligation, per direction in the special call, to update and maintain the accuracy of their profile information by periodically visiting the online New Form 40 portal to review, verify, and/or update their information. However, the Commission believes that the time required to update information contained in New Form 40 using the online portal would be *de minimis.*

Proposed § 18.04(b)—New Form 40: New Form 40 reporting entities arising from New Form 102B and New Form 71 filings (*i.e.,* volume threshold account controllers, persons who own volume threshold accounts, reportable sub-account controllers, and persons who own reportable sub-accounts) would, upon special call by the Commission, file New Form 40 online via a secure portal provided by the Commission. The Commission's special call would typically be in the form of an email request that would contain a URL for the portal, and a unique login and password for access to the portal.

The number of New Form 40 filings arising from volume threshold accounts and reportable sub-accounts would vary according to the number of special calls made by the Commission. An analysis of the Commission's existing Form 40 practices demonstrates that the Commission makes approximately 3,000 special calls annually; however, such calls were made to special account owners and controllers identified via existing DCM-related Form 102. The Commission estimates there could be a much greater number of New Form 102B and New Form 71 filings. As a result, the Commission estimates that the number of potential New Form 40 reporting entities (arising from New Form 102B and New Form 71 filings) would increase as well. The Commission anticipates that it would

[152] The Commission is estimating the number of New Form 71 filings in this manner because New Form 71 provides for an omnibus account reporting structure that does not currently exist, making direct estimates unfeasible.

[153] The Commission's estimate of 3 hours per response reflects an initial, one-time burden of 10 hours, annualized over a five-year period, plus an additional hour per year for change updates.

[154] As discussed in the introduction to this section, the Commission is evaluating the burden associated with each regulation and associated form separately. It should be noted that the burdens estimated for New Form 40 filings, arising from proposed § 18.04(a) and § 18.04(b), are especially duplicative. For example, many of the traders that complete New Form 40 pursuant to 18.04(a) may also be volume threshold account controllers that could receive New Form 40 pursuant to 18.04(b). In practice, if the Commission possesses a recent Form 40 filing from a reporting entity, it may elect not to request a second Form 40 filing from that same entity if the entity becomes reportable under an additional provision of the proposed regulations and there is no additional information to be gained.

receive approximately 12,000 DCM-related New Form 40 filings annually arising from New Form 102B and approximately 1,550 SEF-related New Form 40 filings annually arising from New Form 102B, including filings arising from control of volume threshold accounts and filings arising from ownership of such accounts.[155] Each filing is estimated to require 3 hours,[156] resulting in an estimated total annual reporting burden of 36,000 hours for DCM-related New Form 40 filings and 4,650 hours for SEF-related New Form 40 filings. The Commission estimates that the time required to update information contained in New Form 40 would be *de minimis.* Using an estimated wage rate of $78.61 per hour, annual costs for DCM-related New Form 40 filings arising from volume threshold accounts and reportable sub-accounts are estimated at $2,829,960, while annual costs for SEF-related New Form 40 filings arising from volume threshold accounts and reportable sub-accounts are estimated at $365,537. Collectively, annual costs for New Form 40 filings are estimated at $3,195,497.

Proposed § 18.05: Existing § 18.05 requires traders who hold or control reportable positions to maintain books and records regarding all positions and transactions in the commodity in which they have reportable positions.[157] In addition, existing § 18.05 requires that the trader furnish the Commission with information concerning such positions upon request. The Commission proposes to expand § 18.05 to also impose books and records requirements upon volume threshold account controllers and owners of volume threshold accounts, and upon reportable sub-account controllers and persons who own reportable sub-accounts. Proposed § 18.05 would likely result in an increased reporting burden, as compared to existing § 18.05. An analysis of the Commission's special call practices demonstrates that, in connection with existing § 18.05, the Commission typically makes 12 special calls a month to approximately 45 traders, resulting in a total of 540 special calls.[158] The Commission estimates that proposed § 18.05 would result in an additional six special calls to six different traders.[159] In total, the Commission anticipates that it would make 546 special calls a year to 51 respondents under § 18.05 and that each response would take approximately 5 hours for a total aggregate annual reporting burden of 2,730 hours. Using an estimated wage rate of $78.61 per hour, annual reporting costs are estimated at $214,605.

Proposed § 20.5(a)—102S Filing: The Commission estimated the reporting burden associated with proposed § 20.5(a) by considering the two distinct filing methods that it will accommodate should a final rule be adopted. With two methods of submission, reporting entities (*i.e.,* clearing members and swap dealers) will have the flexibility to select the submission method that works best with their existing data and technology infrastructure and the number of filings they expect to make.

Method 1: This method assumes that each reporting entity would use an automated program to submit its 102Ss via secure FTP. Each Method 1 submission would likely contain numerous 102S records. The Commission estimates that the total initial development burden would average 264 hours per reporting entity. The Commission also estimates that the highly automated nature of this option would virtually eliminate the marginal costs associated with each additional submission or each additional record contained in a submission. The Commission believes that the timing requirements for 102S filings in existing § 20.5(a)(3),[160] or any new submission procedures arising from the Swaps Large Trader Guidebook (*i.e.,* frequency of 102S filing submission), would not increase a reporting entity's burden when using Method 1. The Commission further estimates that ongoing operation and maintenance costs would average 53 hours per year no matter how many records are contained in a submission. The total Method 1 annualized development burden and the ongoing operation and maintenance cost burden (total yearly costs) would equal approximately 106 hours per reporting entity.[161]

The 102S filing requirements in existing § 20.5 [162] are nearly identical to the filing requirements proposed herein for 102S; accordingly, the Commission used its experience to date with 102S filings to estimate the number of 102S reporting entities. The Commission anticipates that it would receive 102S filings from approximately 75 [163] reporting entities annually. Assuming 102S reporting entities utilize Method 1, the Commission estimates that the total annual industry burden for 102S filing would equal 7,950 hours. Using an estimated wage rate of $78.61 per hour, annual costs for 102S filings are estimated at $624,950.

Method 2: This method assumes that each reporting entity would complete and submit each New Form 102S online via a secure portal provided by the Commission. The Commission estimates that the total initial development burden would average 17 hours per 102S record. The Commission also estimates that annual ongoing costs, including change and refresh updates, would average 7 hours per year for each 102S record. The sum of the Method 2 annualized development burden and the ongoing operation and maintenance cost burden (total yearly cost) equals approximately 10 hours per 102S record.[164]

Based on a recent assessment of expected 102S filings, the Commission anticipates that it would receive approximately 500 102S records annually. Assuming each of the estimated 500 102S records are provided via Method 2, the Commission estimates that the total annual industry burden for 102S filings would equal 5,000 hours. Using an estimated wage rate of $78.61 per hour, annual costs for 102S filings made pursuant to Method 2 are estimated at $393,050.

The Commission understands that providing options to the industry should lower costs relative to failing to provide these options. Because of this, estimated total costs to the industry for 102S filing should be lower than any cost associated with mandating either Method 1 or Method 2. Given the cost estimates for the two individual

[155] As with 102A records, the Commission estimates that in approximately 25 percent of filings, the owner and the controller of a volume threshold account reported on New Form 102B will be the same, and that accordingly, only one New Form 40 would be required. Similarly, a number of potential New Form 40 reporting entities are likely to own or control both DCM-related and SEF-related volume threshold accounts, but only one New Form 40 would be required.

[156] The Commission's estimate of 3 hours per response reflects an initial, one-time burden of 10 hours, annualized over a five-year period, plus an additional hour per year for change updates.

[157] 17 CFR 18.05.

[158] The Commission estimates that each response takes approximately 5 hours. Existing § 18.05 therefore results in an annual reporting burden of approximately 2,700 hours. Using an estimated wage rate of $78.61 per hour, annual reporting costs in connection with existing § 18.05 are approximately $212,247.

[159] Proposed § 18.05 would result in an additional annual reporting burden of approximately 30 hours. Using an estimated wage rate of $78.61 per hour, proposed § 18.05 would result in additional annual reporting costs of approximately $2,358.

[160] 17 CFR 20.5(a)(3).

[161] All annualized development burden estimates are based on 5 year, straight line depreciation.

[162] 17 CFR 20.5.

[163] The Commission notes that this estimate for the number of 102S reporting entities is lower than the estimate provided in the Commission's final rules for part 20. The lower estimate is based on the Commission's experience with position reports pursuant to part 20 since the rules were made final.

[164] All annualized development burden estimates are based on 5 year, straight line depreciation.

methods discussed above, the Commission anticipates 102S filing costs to be no more than $393,050 (Method 2), the lower of the two estimated submission costs. In developing this estimate, the Commission does not make any assumptions about the behavior of an individual reporting entity. Reporting entities, given their own individualized needs, are assumed to make the most cost-effective choice for them, which may be either of the two methods.

40S Filings:[165] Persons that are subject to books and records requirements under existing § 20.6[166] and receive a special call from the Commission, would file New Form 40 via an online portal. The Commission's special call would likely be in the form of an email request that would contain a URL for the portal, and a unique login and password for access to the portal. Existing § 20.5(b),[167] which requires the 40S filing, would not be altered by this proposed rulemaking; as a result, the Commission estimates that a similar number of persons would be required to submit a 40S filing. Accordingly, the Commission anticipates that it would receive 40S submissions from approximately 500 filers annually. Each response is estimated to require 3 hours,[168] resulting in an estimated total annual reporting burden of 1,500 hours. Time required to update information contained in 40S filings would be *de minimis* on average. Using an estimated wage rate of $78.61 per hour, annual costs are estimated at $117,915.

b. *Recordkeeping burdens:*

As discussed above, the Commission proposes to expand § 18.05[169] to also impose books and records requirements upon volume threshold account controllers and owners of volume threshold accounts reported on New Form 102B, and on reportable sub-account controllers and persons who own a reportable sub-account reported on New Form 71 (in addition to traders who hold or control reportable positions). As a result, proposed § 18.05 would likely impose a recordkeeping burden on a larger number of persons than existing § 18.05. However, any additional persons subject to proposed § 18.05 may be able to rely on books and records already kept in the ordinary course of business to meet the requirements of the proposed regulation. Accordingly, the Commission believes that proposed § 18.05 would not meaningfully increase recordkeeping burdens on persons brought under its scope.

iv. Comments on Information Collection

The Commission invites the public and other federal agencies to comment on any aspect of the reporting and recordkeeping burdens discussed above. Pursuant to 44 U.S.C. 3506(c)(2)(B), the Commission solicits comments in order to: (i) Evaluate whether the proposed collection of information is necessary for the proper performance of the functions of the Commission, including whether the information would have practical utility; (ii) evaluate the accuracy of the Commission's estimate of the burden of the proposed collection of information; (iii) determine whether there are ways to enhance the quality, utility, and clarity of the information to be collected; and (iv) mitigate the burden of the collection of information on those who are required to respond, including through the use of automated collection techniques or other forms of information technology.

Comments may be submitted directly to the Office of Information and Regulatory Affairs, by fax at (202) 395–6566 or by email at *OIRAsubmissions@omb.eop.gov.* Please provide the Commission with a copy of submitted comments so that all comments can be summarized and addressed in the final regulation preamble. Refer to the **ADDRESSES** section of this Notice for comment submission instructions to the Commission. A copy of the supporting statements for the collections of information discussed above may be obtained by visiting RegInfo.gov. OMB is required to make a decision concerning the collection of information between 30 and 60 days after publication of this Notice. Consequently, a comment to OMB is most assured of being fully effective if received by OMB (and the Commission) within 30 days after publication of this Notice.

Proposed Rules

List of Subjects

17 CFR Part 15

Brokers, Commodity futures, Reporting and recordkeeping requirements.

17 CFR Part 17

Brokers, Commodity futures, Reporting and recordkeeping requirements.

17 CFR Part 18

Commodity futures, Reporting and recordkeeping requirements.

17 CFR Part 20

Physical commodity swaps, Swap dealers, Reporting and recordkeeping requirements.

In consideration of the foregoing and pursuant to the authority contained in the Act, as indicated herein, the Commission hereby proposes to amend chapter I of title 17 of the Code of Federal Regulations as follows:

PART 15—REPORTS—GENERAL PROVISIONS

1. The authority citation for part 15 continues to read as follows:

Authority: 7 U.S.C. 2, 5, 6a, 6c, 6f, 6g, 6i, 6k, 6m, 6n, 7, 7a, 9, 12a, 19, and 21, as amended by Title VII of the Dodd-Frank Wall Street Reform and Consumer Protection Act, Pub. L. 111–203, 124 Stat. 1376 (2010).

2. In § 15.00, revise paragraph (q) and add paragraphs (t) through (ee) to read as follows:

§ 15.00 Definitions of terms used in parts 15 to 19, and 21 of this chapter.

* * * * *

(q) *Reporting market* means a designated contract market or a registered entity under § 1a(40) of the Act.

* * * * *

(t) *Control* means to actually direct, by power of attorney or otherwise, the trading of a special account or a consolidated account. A special account or a consolidated account may have more than one controller.

(u) *Reportable trading volume* means contract trading volume that meets or exceeds the level specified in § 15.04 of this part.

(v) *Direct Market Access (''DMA'')* means a connection method that enables a market participant to transmit orders to a DCM's electronic trade matching system without re-entry by another person or entity, or similar access to the trade execution platform of a SEF. DMA can be provided directly by a DCM or SEF, or by a 3rd-party platform.

[165] The proposed rulemaking does not include provisions to revise § 20.5(b); however, current § 20.5(b) requires a person, after special call by the Commission, to submit a 40S filing which shall consist of the submission of Form 40. The proposed rulemaking does include changes to Form 40. Accordingly, the reporting burden associated with § 20.5(b) and the 40S filing is being recalculated to account for variations between current and New Form 40.

[166] 17 CFR 20.6.

[167] 17 CFR 20.5(b).

[168] The Commission's estimate of 3 hours per response reflects an initial, one-time burden of 10 hours, annualized over a five-year period, plus an additional hour per year for change updates.

[169] 17 CFR 18.05.

(w) *Omnibus account* means any trading account that one futures commission merchant, clearing member or foreign broker carries for another and in which the transactions of multiple individual accounts are combined. The identities of the holders of the individual accounts are not generally known or disclosed to the carrying firm.

(x) *Omnibus account originator* means any futures commission merchant, clearing member or foreign broker that executes trades for one or more customers via one or more accounts that are part of an omnibus account carried by another futures commission merchant, clearing member or foreign broker.

(y) *Volume threshold account* means any trading account that executes, or receives via allocation or give-up, reportable trading volume on or subject to the rules of a reporting market that is a board of trade designated as a contract market under § 5 of the Act or a swap execution facility registered under § 5h of the Act.

(z) *Omnibus volume threshold account* means any trading account that, on an omnibus basis, executes or receives via allocation or give-up, reportable trading volume on or subject to the rules of a reporting market that is a board of trade designated as a contract market under § 5 of the Act or a swap execution facility registered under § 5h of the Act.

(aa) *Omnibus reportable sub-account* means any trading sub-account of an omnibus volume threshold account, which sub-account executes reportable trading volume on an omnibus basis. Omnibus reportable sub-account also means any trading account that is itself an omnibus account, executes reportable trading volume, and is a sub-account of another omnibus reportable sub-account.

(bb) *Reportable sub-account* means any trading sub-account of an omnibus volume threshold account or omnibus reportable sub-account, which sub-account executes reportable trading volume.

(cc) *Trading account controller* means, for reports specified in § 17.01(a) of this chapter, a natural person who by power of attorney or otherwise actually directs the trading of a trading account. A trading account may have more than one controller.

(dd) *Volume threshold account controller* means a natural person who by power of attorney or otherwise actually directs the trading of a volume threshold account. A volume threshold account may have more than one controller.

(ee) *Reportable sub-account controller* means a natural person who by power of attorney or otherwise actually directs the trading of a reportable sub-account. A reportable sub-account may have more than one controller.

3. Revise § 15.01 (c) to read as follows:

§ 15.01 Persons required to report.

* * * * *

(c) As specified in part 18 of this chapter:

(1) Traders who own, hold, or control reportable positions;

(2) Volume threshold account controllers;

(3) Persons who own volume threshold accounts;

(4) Reportable sub-account controllers; and

(5) Persons who own reportable sub-accounts.

* * * * *

4. Revise § 15.02 to read as follows:

§ 15.02 Reporting forms.

Forms on which to report may be obtained from any office of the Commission or via the Internet (*http://www.cftc.gov*). Forms to be used for the filing of reports follow, and persons required to file these forms may be determined by referring to the rule listed in the column opposite the form number.

Form No.	Title	Rule
40	Statement of Reporting Trader	18.04
101	Positions of Special Accounts	17.00
102	Identification of Special Accounts, Volume Threshold Accounts, and Consolidated Accounts	17.01
204	Cash Positions of Grain Traders (including Oilseeds and Products)	19.00
304	Cash Positions of Cotton Traders	19.00
71	Identification of Omnibus Accounts and Sub-accounts	17.01

(Approved by the Office of Management and Budget under control numbers 3038–0007, 3038–0009, and 3038–[NEW])

5. Add § 15.04 to read as follows:

§ 15.04 Reportable trading volume level.

The volume quantity for the purpose of reports filed under parts 17 and 18 of this chapter is trading volume of 50 or more contracts, during a single trading day, on a single reporting market that is a board of trade designated as a contract market under section 5 of the Act or a swap execution facility registered under section 5h of the Act, in all instruments that such reporting market designates with the same product identifier (including purchases and sales, and inclusive of all expiration months).

PART 17—REPORTS BY REPORTING MARKETS, FUTURES COMMISSION MERCHANTS, CLEARING MEMBERS, AND FOREIGN BROKERS

6. The authority citation for part 17 is revised to read as follows:

Authority: 7 U.S.C. 2, 6a, 6c, 6d, 6f, 6g, 6i, 6t, 7, 7a, and 12a, as amended by Title VII of the Dodd-Frank Wall Street Reform and Consumer Protection Act, Pub. L. 111–203, 124 Stat. 1376 (2010).

7. Revise § 17.00(g)(2)(iii) to read as follows:

§ 17.00 Information to be furnished by futures commission merchants, clearing members and foreign brokers.

* * * * *

(g) * * *

(2) * * *

(iii) Account Number. A unique identifier assigned by the reporting firm to each special account. The field is zero

filled with the account number right-justified. Assignment of the account number is subject to the provisions of § 17.00(b) and Form 102.

* * * * *

8. Revise § 17.01 to read as follows:

§ 17.01 Identification of special accounts, volume threshold accounts, and omnibus accounts.

(a) *Identification of special accounts.* When a special account is reported for the first time, the futures commission merchant, clearing member, or foreign broker shall identify the special account to the Commission on Form 102, in accordance with the form instructions and as specified in § 17.02(b).

(b) *Identification of volume threshold accounts.* Each clearing member shall identify and report its volume threshold accounts to the Commission on Form 102, in accordance with the form instructions and as specified in § 17.02(c).

(c) *Identification of omnibus accounts and sub-accounts.* Each originator of an omnibus volume threshold account identified in Form 102 or an omnibus reportable sub-account identified in Form 71 shall, after a special call upon such originator by the Commission or its designee, file with the Commission an ''Identification of Omnibus Accounts and Sub-Accounts'' on Form 71, to be completed in accordance with the instructions thereto, at such time and place as directed in the call.

(d) *Exclusively self-cleared contracts.* Unless determined otherwise by the Commission, reporting markets that list exclusively self-cleared contracts shall meet the requirements of paragraphs (a) and (b) of this section, as they apply to trading in such contracts by all clearing members, on behalf of all clearing members.

(e) *Special call provision.* Upon a call by the Commission or its designee, the reports required to be filed by futures commission merchants, clearing members, foreign brokers, and reporting markets under paragraphs (a), (b), (c), and (d) of this section shall be submitted within 24 hours of the Commission or its designee's request in accordance with the instructions accompanying the request.

9. In § 17.02, revise the introductory text and paragraph (b) and add paragraph (c) to read as follows:

§ 17.02 Form, manner and time of filing reports.

Unless otherwise instructed by the Commission or its designee, the reports required to be filed by reporting markets, futures commission merchants, clearing members, and foreign brokers under §§ 17.00 and 17.01 shall be filed as specified in paragraphs (a), (b), and (c) of this section.

* * * * *

(b) *Section 17.01(a) reports.* For data submitted pursuant to § 17.01(a) on Form 102:

(1) *Form of submission.* Form 102 must be submitted to the Commission in the form and manner provided on *www.cftc.gov.*

(2) *Time of submission.* For each account that is a special account, the futures commission merchant, clearing member, or foreign broker, as appropriate, shall submit a completed Form 102 to the Commission, in accordance with the instructions thereto, and in the manner specified by the Commission or its designee. Such form shall be submitted no later than the corresponding § 17.00(a) report filed pursuant to instructions in § 17.02(a), or on such other date as directed by special call of the Commission or its designee, and as periodically required thereafter by § 17.02(b)(3) and (4).

(3) *Change updates.* If any change causes the information filed by a futures commission merchant, clearing member, or foreign broker on a Form 102 for a special account to no longer be accurate, then such futures commission merchant, clearing member, or foreign broker shall file an updated Form 102 with the Commission no later than 9 a.m. eastern time on the business day after such change occurs, or on such other date as directed by special call of the Commission, *provided that,* a futures commission merchant, clearing member, or foreign broker may stop providing change updates for a Form 102 that it has submitted to the Commission for any special account upon notifying the Commission that the account in question is no longer reportable as a special account.

(4) *Refresh updates.* For Special Accounts—Starting on a date specified by the Commission or its designee and at the end of each six month increment thereafter (or such later date specified by the Commission or its designee), each futures commission merchant, clearing member, or foreign broker shall resubmit every Form 102 that it has submitted to the Commission for each of its special accounts, *provided that,* a futures commission merchant, clearing member, or foreign broker may stop providing refresh updates for a Form 102 that it has submitted to the Commission for any special account upon notifying the Commission that the account in question is no longer reportable as a special account.

(c) *Section 17.01(b) reports.* For data submitted pursuant to § 17.01(b) on Form 102:

(1) *Form of submission.* Form 102 must be submitted to the Commission in the form and manner provided on *www.cftc.gov.*

(2) *Time of submission.* For each account that is a volume threshold account, the clearing member shall submit a completed Form 102 to the Commission, in accordance with the instructions thereto, and in the manner specified by the Commission or its designee, no later than 9 a.m. eastern time on the business day following the day in which the account in question becomes a volume threshold account, or on such other date as directed by special call of the Commission or its designee, and as periodically required thereafter by § 17.02(c)(3) and (4).

(3) *Change updates.* If any change causes the information filed by a clearing member on a Form 102 for a volume threshold account to no longer be accurate, then such clearing member shall file an updated Form 102 with the Commission no later than 9 a.m. eastern time on the business day after such clearing member is aware of such change, or on such other date as directed by special call of the Commission, *provided that,* a clearing member may stop providing Form 102 change updates for a volume threshold account upon notifying the Commission that the volume threshold account executed no trades in any product in the past six months on the reporting market at which the volume threshold account reached the reportable trading volume level.

(4) *Refresh updates.* For Volume Threshold Accounts—Starting on a date specified by the Commission or its designee and at the end of each six month increment thereafter (or such later date specified by the Commission or its designee), each clearing member shall resubmit every Form 102 that it has submitted to the Commission for each of its volume threshold accounts, *provided that,* a clearing member may stop providing refresh updates for a Form 102 that it has submitted to the Commission for any volume threshold account upon notifying the Commission that the volume threshold account executed no trades in any product in the past six months on the reporting market at which the volume threshold account reached the reportable trading volume level.

10. Revise section 17.03 to read as follows:

§ 17.03 Delegation of authority to the Director of the Office of Data and Technology or the Director of the Division of Market Oversight.

The Commission hereby delegates, until the Commission orders otherwise, the authority set forth in the paragraphs below to either the Director of the Office of Data and Technology or the Director of the Division of Market Oversight, as indicated below, to be exercised by such Director or by such other employee or employees of such Director as designated from time to time by such Director. The Director of the Office of Data and Technology or the Director of the Division of Market Oversight may submit to the Commission for its consideration any matter which has been delegated to such Director in this paragraph. Nothing in this paragraph prohibits the Commission, at its election, from exercising the authority delegated in this paragraph.

(a) Pursuant to § 17.00(a) and (h), the authority shall be designated to the Director of the Office of Data and Technology to determine whether futures commission merchants, clearing members and foreign brokers can report the information required under § 17.00(a) and (h) on series '01 forms or using some other format upon a determination that such person is unable to report the information using the format, coding structure or electronic data transmission procedures otherwise required.

(b) Pursuant to § 17.02, the authority shall be designated to the Director of the Office of Data and Technology to instruct or approve the time at which the information required under §§ 17.00 and 17.01(a) and (b) must be submitted by futures commission merchants, clearing members and foreign brokers provided that such persons are unable to meet the requirements set forth in § 17.02.

(c) Pursuant to § 17.01, the authority shall be designated to the Director of the Office of Data and Technology to determine whether to permit an authorized representative of a firm filing the Form 102 or person filing the Form 71 to use a means of authenticating the report other than by signing the Form 102 or Form 71 and, if so, to determine the alternative means of authentication that shall be used.

(d) Pursuant to § 17.00(a), the authority shall be designated to the Director of the Office of Data and Technology to approve a format and coding structure other than that set forth in § 17.00(g).

(e) Pursuant to § 17.01(c), the authority shall be designated to the Director of the Office of Data and Technology to make special calls on omnibus volume threshold account originators and omnibus reportable sub-account originators for information as set forth in § 17.01(c).

(f) Pursuant to § 17.02(b)(4), the authority shall be designated to the Director of the Division of Market Oversight to determine the date on which each futures commission merchant, clearing member, or foreign broker shall update or otherwise resubmit every Form 102 that it has submitted to the Commission for each of its special accounts.

(g) Pursuant to § 17.02(c)(4), the authority shall be designated to the Director of the Division of Market Oversight to determine the date on which each clearing member shall update or otherwise resubmit every Form 102 that it has submitted to the Commission for each of its volume threshold accounts.

PART 18—REPORTS BY TRADERS

11. The authority citation for part 18 is revised to read as follows:

Authority: 7 U.S.C. 2, 4, 5, 6a, 6c, 6f, 6g, 6i, 6k, 6m, 6n, 6t, 12a, and 19, as amended by Title VII of the Dodd-Frank Wall Street Reform and Consumer Protection Act, Pub. L. 111–203, 124 Stat. 1376 (2010).

12. Revise § 18.04 to read as follows:

§ 18.04 Statement of reporting trader.

(a) Every trader who owns, holds, or controls a reportable futures and option position shall after a special call upon such trader by the Commission or its designee file with the Commission a ''Statement of Reporting Trader'' on the Form 40, to be completed in accordance with the instructions thereto, at such time and place as directed in the call.

(b) Every volume threshold account controller, person who owns a volume threshold account, reportable sub-account controller, and person who owns a reportable sub-account shall after a special call upon such person by the Commission or its designee file with the Commission a ''Statement of Reporting Trader'' on the Form 40, to be completed in accordance with the instructions thereto, at such time and place as directed in the call.

13. In § 18.05 revise paragraph (a) introductory text and paragraphs (b) and (c), to read as follows:

§ 18.05 Maintenance of books and records.

(a) Every volume threshold account controller, person who owns a volume threshold account, reportable sub-account controller, person who owns a reportable sub-account, and trader who owns, holds, or controls a reportable futures or option position, shall keep books and records showing all details concerning all positions and transaction in the commodity:

* * * * *

(b) Every such volume threshold account controller, person who owns a volume threshold account, reportable sub-account controller, person who owns a reportable sub-account, and trader who owns, holds, or controls a reportable futures or option position shall also keep books and records showing all details concerning all positions and transactions in the cash commodity, its products and byproducts, and all commercial activities that it hedges in the futures or option contract in which it is reportable.

(c) Every volume threshold account controller, person who owns a volume threshold account, reportable sub-account controller, person who owns a reportable sub-account, and trader who owns, holds, or controls a reportable futures or option position shall upon request furnish to the Commission any pertinent information concerning such positions, transactions, or activities in a form acceptable to the Commission.

PART 20—LARGE TRADER REPORTING FOR PHYSICAL COMMODITY SWAPS

14. The authority citation for part 20 continues to read as follows:

Authority: 7 U.S.C. 1a, 2, 5, 6, 6a, 6c, 6f, 6g, 6t, 12a, 19, as amended by Title VII of the Dodd-Frank Wall Street Reform and Consumer Protection Act, Pub. L. 111–203, 124 Stat. 1376 (2010).

15. In § 20.5, revise paragraphs (a)(1) and (2) and add paragraphs (a)(4) and (5) to read as follows:

§ 20.5 Series S filings.

(a) * * *

(1) When a counterparty consolidated account first becomes reportable, the reporting entity shall submit a 102S filing, as set forth in Appendix A to part 17, in accordance with the form instructions and as specified in this section, including § 20.5.

(2) A reporting entity may submit a 102S filing only once for each counterparty, even if such persons at various times have multiple reportable positions in the same or different paired swaps or swaptions.

* * * * *

(4) *Change updates.* If any change causes the information filed by a clearing member or swap dealer on a Form 102 for a consolidated account to no longer be accurate, then such clearing member or swap dealer shall file an updated Form 102 with the

Commission no later than 9 a.m. eastern time on the business day after such change occurs, or on such other date as directed by special call of the Commission, *provided that,* a clearing member or swap dealer may stop providing change updates for a Form 102 that it has submitted to the Commission for any consolidated account upon notifying the Commission that the account in question is no longer reportable as a consolidated account.

(5) *Refresh updates.* For Consolidated Accounts—Starting on a date specified by the Commission or its designee and at the end of each six month increment thereafter (or such later date specified by the Commission or its designee), each clearing member or swap dealer shall resubmit every Form 102 that it has submitted to the Commission for each of its consolidated accounts, *provided that,* a clearing member or swap dealer may stop providing refresh updates for a Form 102 that it has submitted to the Commission for any consolidated account upon notifying the Commission that the account in question is no longer reportable as a consolidated account.

* * * * *

Issued in Washington, DC, on June 27, 2012 by the Commission.

David A. Stawick,

Secretary of the Commission.

Note: The following Annex will not appear in the Code of Federal Regulations.

BILLING CODE P

ANNEX—FORMS 102, 40 AND 71

CFTC FORM 102
Identification of Special Accounts, Volume Threshold Accounts, and Consolidated Accounts

NOTICE: Failure to file a report required by the Commodity Exchange Act ("CEA" or the "Act")[170] and the regulations thereunder,[171] or the filing of a report with the Commodity Futures Trading Commission ("CFTC" or "Commission") that includes a false, misleading or fraudulent statement or omits material facts that are required to be reported therein or are necessary to make the report not misleading, may (a) constitute a violation of § 6(c)(2) of the Act (7 USC 9, 15), § 9(a)(3) of the Act (7 USC 13(a)(3)), and/or § 1001 of Title 18, Crimes and Criminal Procedure (18 USC 1001) and (b) result in punishment by fine or imprisonment, or both.

PRIVACY ACT NOTICE

The Commission's authority for soliciting this information is granted in sections 4a, 4c(b), 4g, 4i and 8 of the CEA and related regulations (*see*, *e.g.*, 17 CFR § 17.01(b)). The information solicited from entities and individuals engaged in activities covered by the CEA is required to be provided to the CFTC, and failure to comply may result in the imposition of criminal or administrative sanctions (*see*, *e.g.*, 7 U.S.C. §§ 9 and 13a-1, and/or 18 U.S.C. 1001). The information requested is most commonly used in the Commission's market and trade practice surveillance activities to (a) provide information concerning the size and composition of the commodity derivatives markets, (b) permit the Commission to monitor and enforce speculative position limits and (c) enhance the Commission's trade surveillance data. The requested information may be used by the Commission in the conduct of investigations and litigation and, in limited circumstances, may be made public in accordance with provisions of the CEA and other applicable laws. It may also be disclosed to other government agencies and to contract markets to meet responsibilities assigned to them by law. The information will be maintained in, and any additional disclosures will be made in accordance with, the CFTC System of Records Notices, available on www.cftc.gov.

[170] 7 U.S.C. section 1, *et seq*.

[171] Unless otherwise noted, the rules and regulations referenced in this notice are found in chapter 1 of title 17 of the Code of Federal Regulations; 17 CFR Chapter 1 *et seq*.

BACKGROUND & INSTRUCTIONS

17 CFR § 17.01(a) requires each futures commission merchant, clearing member, or foreign broker to identify and report its special accounts to the Commission on Form 102. 17 CFR § 17.01(b) requires each clearing member to identify and report its volume threshold accounts to the Commission on Form 102. In addition, 17 CFR § 20.5 requires each reporting entity holding or carrying a consolidated account with a reportable position to identify and report the counterparty of such account to the Commission by submitting a 102S filing. As appropriate, please follow the instructions below to generate and submit the required report or filing. Unless the context requires otherwise, the terms used herein shall have the same meaning as ascribed in parts 15 to 21 of the Commission's regulations.

Complete Form 102 as follows:

General Information – Cover Sheet:	All filers.
Section 102A:	Only complete when submitting Form 102 for a special account.
Section 102B:	Only complete when submitting Form 102 for a volume threshold account.
Section 102S:	Only complete when submitting a 102S filing.
Signature/Authentication:	All filers.

Submitting Form 102: Once completed, please submit this form to the Commission pursuant to the instructions on [www.cftc.gov] or as otherwise directed by Commission staff. If submission attempts fail, the reporting trader shall contact the Commission at [techsupport@cftc.gov] for further technical support.

Please be advised that pursuant to 5 CFR § 1320.5(b)(2)(i), you are not required to respond to this collection of information unless it displays a currently valid OMB control number.

General Information – Cover Sheet.

Please indicate the type of account to be reported (choose only one):

Special Account (please complete section 102A)	☐
Volume Threshold Account 102 (please complete section 102B)	☐
Consolidated Account 102S filing (please complete section 102S)	☐

Reporting Firm Contact Information:[172]

Whether submitting Form 102 for a special account, volume threshold account, or as a 102S filing for a consolidated account, please provide the contact information of the reporting firm and, as applicable, indicate whether the reporting firm is a futures commission merchant, clearing member, foreign broker, and/or swap dealer. In addition, provide the reporting firm's reporting firm ID.[173]

Name of Reporting Firm:
Street Address:
City:
State:
Country:
Zip/Postal Code:
Reporting Firm Contact Name (a natural person, "Contact"):
Contact Job Title:
Contact Phone Number:
Contact Email Address:
Firm Website:
Firm NFA ID (if any):
Firm Legal Entity Identifier (if any):
Reporting Firm Type(s) (mark all that apply):

☐ Futures commission merchant

☐ Clearing member

☐ Foreign broker

☐ Swap dealer

☐ Other: _____

Reporting Firm ID:

[172] The term "reporting firm" as used herein may refer to a futures commission merchant, clearing member, foreign broker, swap dealer, or other reporting entity, as appropriate.
[173] The "reporting firm ID" is an alpha-numeric identifier assigned by the Commission.

Section 102A – Identifying and reporting a *special account*.

1. *New/Modified Indicator:*

☐ Special account being reported for the first time

☐ Re-submitted or modified Information for a previously reported special account

2. *Special Account Origination.*

For each special account, indicate whether the account is being reported based on ownership of a reportable position, control of a reportable position, both ownership and control of a reportable position, or because it is an omnibus account with a reportable position (choose only one):

Ownership of a reportable position (complete questions 3, 4, 6, 9, 10, and 11)	☐
Control of a reportable position (complete questions 3, 7, 9, 10,and 11)	☐
Ownership and control of a reportable position (complete questions 3, 6, 7, 9, 10, and 11)	☐
Omnibus account with a reportable position[174] (complete questions 3, 5, 8, 9, 10, and 11)	☐

3. *Reporting number and name.*[175]

Provide the reporting number and name of the special account.

Special Account Number:
Special Account Name:

4. *House or Customer Indicator.*

If the reported special account is being reported based on ownership of a reportable position, indicate whether the special account is a house or customer account of the reporting firm:

☐ HOUSE

☐ CUSTOMER

[174] Omnibus accounts are accounts that one futures commission merchant, clearing member or foreign broker carries for another in which the transactions of multiple individual accounts are combined. The identities of the holders of the individual accounts are not generally known or disclosed to the carrying firm.

[175] Reporting firms shall assign a reporting number and name to each special account when it is reportable for the first time in futures or options. If an account has been assigned a number and name for reporting in futures (options), use the same number and name for reporting options (futures). Such reporting number and name must not be changed or assigned to any other special account without the prior approval of the Commission.

5. *Omnibus Account Information.*

If the reported special account is an omnibus account, indicate whether the account is a house or customer omnibus account:[176]

☐ HOUSE

☐ CUSTOMER

6. *Special Account Owner(s) Contact Information.*

Provide the following information regarding the owner of this special account. Owners may be natural persons or any type of legal entity.

Indicate whether the owner is a legal entity or a natural person:
Legal entity: ☐
Natural person: ☐
Name of Special Account Owner:
Street Address:
City:
State:
Country:
Zip/Postal Code:
Phone Number:
Email Address:
Contact Name (if owner not a natural person):
Contact Job Title:
Contact Relationship to Owner:
Contact Phone Number:
Contact Email Address:
Owner Website (if any):
Owner NFA ID (if any):
Owner Legal Entity Identifier (if any):

7. *Special Account Controller(s) Contact Information.*

Provide the following information regarding the controller of this special account. Controllers may be natural persons or any type of legal entity.

Indicate whether the controller is a legal entity or a natural person:
Legal entity: ☐
Natural person: ☐
Name of Special Account Controller:
Street Address:
City:

[176] House omnibus accounts exclusively contain the proprietary accounts of the omnibus account originator. Customer omnibus accounts contain the accounts of customers of the omnibus account originator. It is the obligation of the omnibus account originator to correctly identify the omnibus account type to the reporting entity.

State:
Country:
Zip/Postal Code:
Phone Number:
Email Address:
Contact Name (if controller not a natural person):
    Contact Job Title:
    Contact Relationship to Controller:
    Contact Phone Number:
    Contact Email Address:
Controller Website (if any):
Controller NFA ID (if any):
Controller Legal Entity Identifier (if any):

8. *Omnibus Account Originator Contact Information*.

Provide contact information for the originator of the omnibus account in this special account.

Name of Omnibus Account Originator:
Street Address:
City:
State:
Country:
Zip/Postal Code:
Phone Number:
Contact Name:
    Contact Job Title:
    Contact Relationship to Originator:
    Contact Phone Number:
    Contact Email Address:
Originator Website (if any):
Originator NFA ID (if any):
Originator Legal Entity Identifier (if any):

9. *Identification of Trading Account(s) that Comprise the Special Account.*

For each special account reported by an entity acting as a *clearing member*, provide the trading account number(s), and any related short code(s), that comprise this special account. Also identify the reporting market at which each trading account number appears.

Trading Account Number:
Short Code(s):
Reporting Market:

10. *Market Access.*

For each trading account identified in question 9, indicate whether the trading account has been granted direct market access ("DMA") to the trade matching system of the respective reporting market identified in question 9.

DMA Status:

☐ YES

☐ NO

11. Trading Account Ownership and Control Information.

(i) Omnibus Account Information.

For each trading account identified in question 9, is such account an omnibus account, or used to execute trades for an omnibus account?

☐ YES

☐ NO

If NO, proceed to (ii) and (iii), below. If YES, indicate whether the account is a house or customer omnibus account and provide contact information for the originator of the omnibus account:[177]

☐ HOUSE

☐ CUSTOMER

Name of Omnibus Account Originator:
Street Address:
City:
State:
Country:
Zip/Postal Code:
Phone Number:
Contact Name:
Contact Job Title:
Contact Relationship to Originator:
Contact Phone Number:
Contact Email Address:
Originator Website (if any):
Originator NFA ID (if any):
Originator Legal Entity Identifier (if any):

(ii) Trading Account Owner(s).

For each trading account identified in question 9 that is not an omnibus account, provide the requested information for each owner ("owner").

Indicate whether the owner is a legal entity or a natural person:

[177] As above, house omnibus accounts exclusively contain the proprietary accounts of the omnibus account originator. Customer omnibus accounts contain the accounts of customers of the omnibus account originator. It is the obligation of the omnibus account originator to correctly identify the omnibus account type to the reporting entity.

Legal entity: ☐

Natural person: ☐

Name of Trading Account Owner(s):
Street Address:
City:
State:
Country:
Zip/Postal Code:
Phone Number:
Email Address (if owner(s) a natural person):
Contact Name (provide only if owner is not a natural person):

Contact Job Title:
Contact Relationship to Owner:
Contact Phone Number:
Contact Email Address:

Owner Website (if any):
Owner NFA ID (if any):
Owner Legal Entity Identifier (if any):

(iii) Trading Account Controller(s).

For each trading account identified in question 9 that is not an omnibus account, provide the requested information for each controller ("controller"). NOTE: As defined in §15.00, the controller identified for a trading account that comprises or pertains to a special account must be a natural person.

Name of Trading Account Controller(s):
Street Address:
City:
State:
Country:
Zip/Postal Code:
Phone Number:
Name of Employer:
Employer NFA ID (if any):
Employer Legal Entity Identifier (if any):
Job Title:
Relationship to Owner:
Email Address:
Controller NFA ID (if any):

12. For Reporting Firms That Are Foreign Brokers.

If the reporting firm indicated that it is a foreign broker in the "Reporting Firm Contact Information" above, identify the reporting firm's U.S. futures commission merchant.

Name of U.S. futures commission merchant:
Street Address:
City:
State:
Country:
Zip/Postal Code:
Contact Name at U.S. futures commission merchant (a natural person,

"Contact"):
Contact Job Title:
Contact Phone Number:
Contact Email Address:

_____

Section 102B – Identifying and reporting a *volume threshold account.*

1. *New/Modified Indicator:*

☐ Volume threshold account being reported for the first time

☐ Re-submitted or modified Information for a previously reported volume threshold account

2. *Trading Account Data for the Volume Threshold Account.*

Provide the trading account number, and any related short code(s), deemed to be a volume threshold account. Also identify the reporting market at which the volume threshold account had reportable trading volume.

Trading Account Number:
Short Code(s):
Reporting Market:

3. *Market Access.*

Indicate whether the volume threshold account has been granted direct market access ("DMA") to the trade matching system or trade execution platform of the respective reporting market identified above.

DMA Status:

☐ YES

☐ NO

4. *Associated Special Account Number.*

If the volume threshold account has been previously identified as a trading account that comprises a special account(s) reported by a clearing member in question 9 in section 102A of this form, provide the associated special account number(s).

5. *Omnibus Account Information.*[178]

Is the reported volume threshold account an omnibus account, or used to execute trades for an omnibus account?

☐ YES

[178] As above, omnibus accounts are accounts that one futures commission merchant, clearing member or foreign broker carries for another in which the transactions of multiple individual accounts are combined. The identities of the holders of the individual accounts are not generally known or disclosed to the carrying firm.

☐ NO

If NO, proceed to (6) and (7), below. If YES, indicate whether the account is a house or customer omnibus account and provide contact information for the originator of the omnibus account:[179]

☐ HOUSE

☐ CUSTOMER

Name of Omnibus Account Originator:
Street Address:
City:
State:
Country:
Zip/Postal Code:
Phone Number:
Contact Name:
Contact Job Title:
Contact Relationship to Originator:
Contact Phone Number:
Contact Email Address:
Originator Website (if any):
Originator NFA ID (if any):
Originator Legal Entity Identifier (if any):

6. *Volume Threshold Account Owner(s).*

For each volume threshold account that is not an omnibus account, provide the requested information for each owner ("owner").

Indicate whether the owner is a legal entity or a natural person:
Legal entity: ☐
Natural person: ☐
Name of Volume Threshold Account Owner(s):
Street Address:
City:
State:
Country:
Zip/Postal Code:
Phone Number:
Email Address (if owner(s) a natural person):
Contact Name (provide only if owner is not a natural person):
Contact Job Title:
Contact Relationship to Owner:
Contact Phone Number:
Contact Email Address:
Owner Website (if any):
Owner NFA ID (if any):
Owner Legal Entity Identifier (if any):

[179] As above, house omnibus accounts exclusively contain the proprietary accounts of the omnibus account originator. Customer omnibus accounts contain the accounts of customers of the omnibus account originator. It is the obligation of the omnibus account originator to correctly identify the omnibus account type to the reporting entity.

7. *Volume Threshold Account Controller(s).*

For each volume threshold account identified that is not an omnibus account, provide the requested information for each volume threshold account controller ("controller"). NOTE: As defined in §15.00, a volume threshold account controller must be a natural person.

Name of Volume Threshold Account Controller(s):
Street Address:
City:
State:
Country:
Zip/Postal Code:
Phone Number:
Name of Employer:
Employer NFA ID (if any):
Employer Legal Entity Identifier (if any):
Job Title:
Relationship to Owner:
Email Address:
Controller NFA ID (if any):

Section 102S – Identifying and reporting a swap counterparty or customer *consolidated account* with a reportable position (102S filing).

1. *New/Modified Indicator.*

☐ Counterparty or customer reported for the first time

☐ Re-submitted or modified Information for a previously reported counterparty or customer

2. *102S Identifier.* Please enter the identifier for the consolidated account reported herein. A 102S identifier is a unique identifier for each reporting entity or counterparty/customer as assigned by the reporting entity. If the reporting entity currently identifies a counterparty via Section 102A of a Form 102, the identifier used on Section 102A of the Form 102 may also be used for the 102S identifier, as long as the same legal entity is referenced.

102S identifier:

3. *Counterparty or Customer Ownership and Control Information.* Please provide the requested counterparty or customer contact information for both owners and controllers of the consolidated account.

(i) *Consolidated Account Type.* Please indicate the consolidated account type:

☐ HOUSE ACCOUNT

☐ CUSTOMER ACCOUNT

(ii) *Omnibus Account Information.*[180]

Is the reported consolidated account an omnibus account, or used to execute trades for an omnibus account?

☐ YES

☐ NO

If NO, proceed to (iii) and (iv), below. If YES, indicate whether the account is a house or customer omnibus account and provide contact information for the originator of the omnibus account:[181]

☐ HOUSE

☐ CUSTOMER

---

[180] As above, omnibus accounts are accounts that one futures commission merchant, clearing member or foreign broker carries for another in which the transactions of multiple individual accounts are combined. The identities of the holders of the individual accounts are not generally known or disclosed to the carrying firm.

[181] As above, house omnibus accounts exclusively contain the proprietary accounts of the omnibus account originator. Customer omnibus accounts contain the accounts of customers of the omnibus account originator. It is the obligation of the omnibus account originator to correctly identify the omnibus account type to the reporting entity.

Name of Omnibus Account Originator:
Street Address:
City:
State:
Country:
Zip/Postal Code:
Phone Number:
Contact Name:
Contact Job Title:
Contact Relationship to Originator:
Contact Phone Number:
Contact Email Address:
Originator Website (if any):
Originator NFA ID (if any):
Originator Legal Entity Identifier (if any):

(iii) Consolidated Account Owner(s).

For each reportable consolidated account that is not an omnibus account, provide the requested information for each owner ("owner").

Indicate whether the owner is a legal entity or a natural person:
Legal entity: ☐
Natural person: ☐
Name of Consolidated Account Owner(s):
Street Address:
City:
State:
Country:
Zip/Postal Code:
Phone Number:
Email Address (if owner(s) a natural person):
Contact Name (provide only if owner is not a natural person):
Contact Job Title:
Contact Relationship to Owner:
Contact Phone Number:
Contact Email Address:
Owner Website (if any):
Owner NFA ID (if any):
Owner Legal Entity Identifier (if any):

(iv) Consolidated Account Controller(s).

For each reportable consolidated account that is not an omnibus account, provide the requested information for each controller ("controller"). Controllers may be natural persons or any type of legal entity.

Indicate whether the controller is a legal entity or a natural person:
Legal entity: ☐
Natural person: ☐
Name of Consolidated Account Controller(s):

Street Address:
City:
State:
Country:
Zip/Postal Code:
Phone Number:
Email Address:
Contact Name (provide only if controller is not a natural person):
Contact Job Title:
Contact Relationship to controller:
Contact Phone Number:
Contact Email Address:
Controller NFA ID (if any):
Controller Legal Entity Identifier (if any):

4. *Paired Swaps and Swaptions Market Activity*. Provide a brief description of the nature of the counterparty's or customer's paired swaps and swaptions market activity (please include a response for each type of paired swap or swaption market activity):

Enter the description here:

Signature/Authentication.

1. *Please sign/authenticate the Form 102 prior to submitting.*

Signature/Electronic Authentication:

☐ By checking this box and submitting this form (or by clicking "submit," "send," or any other analogous transmission command if transmitting electronically), I certify that I am duly authorized by the reporting firm identified below to provide the information and representations submitted on this Form 102, and that the information and representations are true and correct.

Reporting Firm Authorized Representative (Name and Position):

_____ (Name)

_____ (Position)

Submitted on behalf of:

_____ (Reporting Firm Name)

Date of Submission:

_____

CFTC FORM 40
STATEMENT OF REPORTING TRADER

NOTICE: Failure to file a report required by the Commodity Exchange Act ("CEA" or the "Act")[182] and the regulations thereunder,[183] or the filing of a report with the Commodity Futures Trading Commission ("CFTC" or "Commission") that includes a false, misleading or fraudulent statement or omits material facts that are required to be reported therein or are necessary to make the report not misleading, may (a) constitute a violation of § 6(c)(2) of the Act (7 USC 9, 15), § 9(a)(3) of the Act (7 USC 13(a)(3)), and/or § 1001 of Title 18, Crimes and Criminal Procedure (18 USC 1001) and (b) result in punishment by fine or imprisonment, or both.

PRIVACY ACT NOTICE

The Commission's authority for soliciting information from traders with large futures, option, swap, or other derivatives market positions is granted in sections 4a, 4i, 4t and 8 of the CEA (*see* 7 U.S.C. §§ 6i and 12). The Commission's authority for soliciting information from volume threshold account controllers, persons who own volume threshold accounts, reportable sub-account controllers, and persons who own reportable sub-accounts is granted in sections 4i and 8 of the CEA and related regulations (*see, e.g.*, 17 CFR § 18.04(b)). Such entities and individuals are required to provide the information requested, and failure to comply may result in the imposition of criminal or administrative sanctions (*see*, *e.g.*, 7 U.S.C. §§ 9 and 13a-1, and/or 18 U.S.C. 1001).

The information requested is most commonly used in the Commission's market and trade practice surveillance activities to (a) provide information concerning the size and composition of the commodity derivatives markets, (b) permit the Commission to monitor and enforce speculative position limits and (c) enhance the Commission's trade surveillance data. Information contained in these records may be used by the Commission in the conduct of investigations or litigation and, in limited circumstances, may be made public in accordance with provisions of the CEA and other applicable laws. It may also be disclosed to other government agencies and to contract markets to meet responsibilities assigned to them by law. In accordance with the Privacy Act and the Commission's rules thereunder (*see* 17 CFR § 146), the complete listing of uses of the information contained in these records is found in the Commission's System of Records Notices, available on www.cftc.gov. These uses include CFTC-15, Large Trader Report Files (Integrated Surveillance System).

Information contained in these records may be used by the Commission in the conduct of investigations or litigation and, in limited circumstances, may be made public in accordance with provisions of the CEA and other applicable laws. It may also be disclosed to other government agencies and to reporting markets to meet responsibilities assigned to them by law.

---

[182] 7 U.S.C. section 1, *et seq*.

[183] Unless otherwise noted, the rules and regulations referenced in this notice are found in chapter 1 of title 17 of the Code of Federal Regulations; 17 CFR Chapter 1 *et seq*.

GENERAL INSTRUCTIONS

Who Must File a Form 40 – 17 CFR § 18.04(a) requires every person who owns or controls a reportable position to file a Form 40 – Statement of Reporting Trader with the Commission. 17 CFR § 18.04(b) requires every volume threshold account controller, person who owns a volume threshold account, reportable sub-account controller, and person who owns a reportable sub-account to file a Form 40 – Statement of Reporting Trader with the Commission. 17 CFR § 20.5 requires every person subject to books or records under 17 CFR § 20.6 to file a 40S filing[184] with the Commission.

When to file – A reporting trader must file a Form 40 on call by the Commission or its designee.

Where to file – The Form 40 shall be filed by submitting the completed form to the nearest CFTC office or as otherwise instructed by the Commission or its designee. Generally, a Form 40 should be submitted via the CFTC's web-based Form 40 submission process at [www.cftc.gov]. If submission attempts fail, the reporting trader shall contact the Commission at [techsupport@cftc.gov] for further technical support.

When to update – A reporting trader must update and maintain the accuracy of its Form 40 profile information on the CFTC's web-based Form 40 portal, as directed by the Commission or its designee in a special call, by periodically visiting the portal to review, verify, and/or update this information.

Signature – Each Form 40 submitted to the Commission must be signed or otherwise authenticated by either (1) the reporting trader submitting the form or (2) an individual that is duly authorized by the reporting trader to provide the information and representations contained in the form.

What to File – All reporting traders that are filing a Form 40 pursuant to either 17 CFR § 18.04(a) (*i.e.* reportable position reporting traders) or 17 CFR § 20.5 (*i.e.* swaps books and records reporting traders) must complete all questions. All reporting traders that are filing a Form 40 pursuant to 17 CFR § 18.04(b) (*i.e.* volume threshold account controllers, persons who own a volume threshold account, reportable sub-account controllers, and persons who own a reportable sub-account reporting trader) must complete all questions *unless they are natural persons*. Reporting traders that are filing a Form 40 pursuant to 17 CFR § 18.04(b) who are natural persons shall mark not applicable for questions 7 and 8.

Please be advised that pursuant to 5 CFR § 1320.5(b)(2)(i), you are not required to respond to this collection of information unless it displays a currently valid OMB control number.

---

[184] As used in this document, "Form 40" may refer to either a Form 40 – Statement of Reporting Trader or a 40S Filing, as appropriate, and as the context may require.

TABLE OF CONTENTS

1. General information for Reporting Trader
2. Contact Information for Individual Responsible for Trading Activities
3. Contact Information for Individual Responsible for Risk Management Operations
4. Contact information for Individual Responsible for Information on the Form 40
5. Omnibus Account Identification
6. Foreign Government Affiliation
7. Non-Domestic Entity Indicator
8. Ownership Structure (Parent/Parents)
9. Ownership Structure (Subsidiary/Subsidiaries)
10. Control of Reporting Trader's Trading Activities by Others
11. Control of Other's Trading Activities by Reporting Trader
12. Commodity Index Trading Indicator
13. Swap Dealer Identification
14. Major Swap Participant Identification
15. Business Sectors, Subsectors and Occupation
16. Commodities Being Traded in Derivative Markets
17. Business Purpose for Trading in Derivative Markets
18. Signature/Authentication, Name, and Date

ACKNOWLEDGEMENT OF DEFINITIONS

Before proceeding with your submission, please check this box to indicate that you have read the definitions for the following terms – as they are used in the Form 40: ☐

Commodity (or commodities) – generally, all goods and articles (except onions and motion picture box office receipts, or any index, measure, value, or data related to such receipts), and all services, rights, and interests (except motion picture box office receipts, or any index, measure, value, or data related to such receipts) in which contracts for future delivery are presently or in the future dealt in (*see* 7 USC 1a(9)).

Commodity index Trading ("CIT") – means:

a. An investment strategy that consists of investing in an instrument (*e.g.*, a commodity index fund, exchange-traded fund for commodities, or exchange-traded note for commodities) that enters into one or more derivative contracts to track the performance of a published index that is based on the price of one or more commodities, or commodities in combination with other securities; or

b. An investment strategy that consists of entering into one or more derivative contracts to track the performance of a published index that is based on the price of one or more commodities, or commodities in combination with other securities.

Control – as used in this Form, "control" means to actually direct, by power of attorney or otherwise, the trading of a special account or a consolidated account. A special account or a consolidated account may have more than one controller.

Derivatives – futures, options, swaps, and swaptions.

Omnibus volume threshold account - means any trading account that, on an omnibus basis, executes or receives via allocation or give up, reportable trading volume on or subject to the rules of a reporting market that is a board of trade designated as a contract market under § 5 of the Act or a swap execution facility registered under § 5h of the Act.

Parent – for purposes of Form 40, a person is a parent of a reporting trader if it has a direct or indirect controlling interest in the reporting trader; and a person has a controlling interest if such person has the ability to control the reporting trader through the ownership of voting equity, by contract, or otherwise.

Person – an individual, association, partnership, corporation, trust, or government agency and/or department.
Reportable sub-account – means any trading sub-account of an omnibus volume threshold account or omnibus reportable sub-account, which sub-account executes reportable trading volume.

Reportable sub-account controller – means a natural person who by power of attorney or otherwise actually directs the trading of a reportable sub-account. A reportable sub-account may have more than one controller.

Reportable trading volume – means contract trading volume that meets or exceeds the level specified in 17 CFR § 15.04.

Reporting trader – a person who must file a Form 40, whether pursuant to 17 CFR § 18.04(a), 17 CFR § 18.04(b), or 17 CFR § 20.05.

Subsidiary – for purposes of Form 40, a person is a subsidiary of a reporting trader if the reporting trader has a direct or indirect controlling interest in the person; and a reporting trader has a controlling interest if such reporting trader has the ability to control the person through the ownership of voting equity, by contract, or otherwise.

Volume threshold account – means any trading account that executes, or receives via allocation or give up, reportable trading volume on or subject to the rules of a reporting market that is a board of trade designated as a contract market under § 5 of the Act or a swap execution facility registered under § 5h of the Act.
Volume threshold account controller – means a natural person who by power of attorney or otherwise actually directs the trading of a volume threshold account. A volume threshold account may have more than one controller.

CFTC FORM 40

General Information for Reporting Trader:
For question 1, please provide the name, contact information and other requested information regarding the reporting trader. If the reporting trader is an individual, provide their full legal name and the name of the reporting trader's employer.

1. Indicate whether the reporting trader is a legal entity or a natural person:
   Legal entity: □

   Natural person: □

   Name of Reporting Trader
   Street Address
   City
   State
   Country
   Zip/Postal Code
   Phone Number
   Email Address
   Website
   NFA ID (if any)
   Legal Entity Identifier (if any)
   Name of Employer
   Employer NFA ID (if any)
   Employer Legal Entity Identifier (if any)

Contact Information:
For questions 2, 3, and 4, provide the name and contact information as requested.

2. Individual to contact regarding the derivatives trading of the reporting trader (this individual should be able to answer specific questions about the reporting trader's trading activity when contacted by Commission staff):

   Check here if this individual has the same contact information as that of the reporting trader.
   Name
   Street Address
   City
   State
   Country
   Zip/Postal Code
   Phone Number
   Email Address
   NFA ID (if any)

3. Individual to contact regarding the risk management operations of the reporting trader (this individual should be able to answer specific questions about the reporting trader's risk management operations, including account margining, when contacted by Commission staff):

Check here if this individual has the same contact information as that of the reporting trader.
Name
Street Address
City
State
Country
Zip/Postal Code
Phone Number
Email Address
NFA ID (if any)

4. Individual responsible for the information on the Form 40 (this individual should be able to verify, clarify, and explain the answers submitted by a reporting trader on the Form 40):

Check here if this individual has the same contact information as that of the reporting trader.
Name
Street Address
City
State
Country
Zip/Postal Code
Phone Number
Email Address
NFA ID (if any)

Omnibus Account Identification:
For question 5, indicate whether the reporting trader has a customer omnibus account with a futures commission merchant, clearing member, or foreign broker (NOTE: For the purpose of this question, an omnibus account is an account that one futures commission merchant, clearing member or foreign broker carries for another in which the transactions of multiple individual accounts are combined. The identities of the holders of the individual accounts are not generally known or disclosed to the carrying firm. In addition, the Commission has traditionally identified omnibus accounts as either *house* or *customer* omnibus accounts. House omnibus accounts exclusively contain the proprietary accounts of the omnibus account originator. Customer omnibus accounts contain the accounts of customers of the omnibus account originator. It is the obligation of the omnibus account originator to correctly identify the omnibus account type to the reporting entity):

5. Does the reporting trader have a customer omnibus account with a futures commission merchant, clearing member, or foreign broker? YES/NO
IF YES, Give the name(s) of the futures commission merchant, clearing member, or foreign broker carrying the account(s) of the reporting trader.

Foreign Government Affiliation:
For question 6, please complete the following (NOTE: For the purpose of this question, affiliation can include, but is not limited to, a situation (1) where the foreign government directly or indirectly controls the reporting trader's assets, operations, and/or derivatives trading, or (2) where the reporting trader

operates as a direct or indirect subsidiary of a foreign government, its agencies or departments, or any investment program of the foreign government):

6. Is the reporting trader directly or indirectly affiliated with a government other than that of the United States? YES/NO

   IF YES, give the name of the government(s).
   IF YES, explain the nature of the affiliation between the reporting trader and the government(s) listed above.

Non-Domestic Entity Indicator.
For question 7, if the Reporting Trader is a legal entity, please complete the following.

7. Is the reporting trader organized under the laws of a country other than the United States? YES/NO
   IF YES, give the name of the country or countries under whose laws the reporting trader is organized.

Ownership Structure of the Reporting Trader:
For questions 8 and 9, provide the requested ownership information only as applicable.
If the Reporting Trader is a commodity pool, also provide the requested information in questions 8i, 8ii, and 8iii. If the Reporting Trader is reporting commodity pools in which it has an ownership interest, also provide the requested information in questions 9i, 9ii, and 9iii.

8. List all the parents of the reporting trader (including the immediate parent and any parent(s) of its parent) and, separately, all persons that have a 10 percent or greater ownership interest in the reporting trader (commodity pool investors are deemed to have an ownership interest in the pool). For each such parent or 10 percent or greater owner include the following information:

   Indicate whether the party identified below is a legal entity or a natural person:

   Legal entity: □

   Natural person: □

   Name
   Street Address
   City
   State
   Country
   Zip/Postal Code
   Phone Number
   Website
   Email Address
   NFA ID (if any)
   Legal Entity Identifier (if any)
   Parent Company/10% Owner/ or Both Indicator

   8i. For each person identified in question 8 that is a limited partner, shareholder, or other similar type of pool participant, indicate if they are a principal or affiliate of the operator of the commodity pool.

Principal/Affiliate Indicator

8ii. For each person identified in question 8 that is a limited partner, shareholder, or other similar type of pool participant, indicate if they are also a commodity pool operator of the pool.

Commodity Pool Operator Indicator

8iii. For each person identified in question 8 that is a limited partner, shareholder, or other similar type of pool participant and where the operator of the commodity pool is exempt from registration under §4.13 of the Commission's regulations, indicate if that person has an ownership or equity interest of 25 percent or greater in the commodity pool.

25% Ownership Indicator

9. List all the subsidiaries of the reporting trader (including the immediate subsidiary and any subsidiaries of those subsidiaries) and, separately, all persons in which the reporting trader has a 10 percent or greater ownership interest (including a 10 percent or greater interest in a commodity pool(s)). Only list subsidiaries and persons that engage in derivatives trading. For each such subsidiary and/or person include the following information:

Indicate whether the party identified below is a legal entity or a natural person:

Legal entity: □

Natural person: □

Name
Street Address
City
State
Country
Zip/Postal Code
Phone Number
Website
Email Address
NFA ID (if any)
Legal Entity Identifier (if any)
Subsidiary/10% Ownership/ or Both Indicator

9i. For each person identified in question 9 that is a commodity pool and for which you are a limited partner, shareholder or other similar type of pool participant, indicate if you are a principal or affiliate of the operator of the commodity pool.

Principal/Affiliate Indicator

9ii. For each person identified in question 9 that is a commodity pool and for which you are a limited partner, shareholder or other similar type of pool participant, indicate if you are the commodity pool operator for the pool.

Commodity Pool Operator Indicator

9iii. For each person identified in question 9 that is a commodity pool and for which you are a limited partner, shareholder or other similar type of pool participant and for which the operator of the commodity pool is exempt from registration under §4.13 of the Commission's regulations, indicate if you have an ownership or equity interest of 25 percent or greater in the commodity pool.

25% Ownership Indicator

Control of Trading:
For questions 10, 11, 12, and 13 provide the requested control information only as applicable.

10. List all persons outside of the reporting trader that control some or all of the derivatives trading of the reporting trader (including persons that may have been previously identified as a parent, above):

    Indicate whether the party identified below is a legal entity or a natural person:

    Legal entity: □

    Natural person: □

    Name
    Street Address
    City
    State
    Country
    Zip/Postal Code
    Phone Number
    Website
    Email Address
    NFA ID (if any)
    Legal Entity Identifier (if any)
    Some/All Indicator

11. List all persons for which the reporting trader controls some or all of the derivatives trading (including persons that may have been previously identified as a subsidiary, above):

    Indicate whether the party identified below is a legal entity or a natural person:

    Legal entity: □

    Natural person: □

    Name
    Street Address
    City
    State
    Country
    Zip/Postal Code
    Phone Number
    Website
    Email Address
    NFA ID (if any)
    Legal Entity Identifier (if any)

Some/All Indicator

12. List any other person(s) that directly or indirectly influence, or exercise authority over, some or all of the trading of the reporting trader, but who do not exercise "control" as defined in this Form:
Indicate whether the party identified below is a legal entity or a natural person:

Legal entity: □

Natural person: □

Name
Street Address
City
State
Country
Zip/Postal Code
Phone Number
Website
Email Address
NFA ID (if any)
Legal Entity Identifier (if any)
Some/All Indicator

13. Is some or all of the derivatives trading of the reporting trader subject to an express or implied agreement or understanding with any other person(s) not addressed in questions 10, 11, or 12, above? YES/NO
If yes, provide the following information:

Indicate whether the party identified below is a legal entity or a natural person:

Legal entity: □

Natural person: □

Name
Street Address
City
State
Country
Zip/Postal Code
Phone Number
Website
Email Address
NFA ID (if any)
Legal Entity Identifier (if any)
Some/All Indicator

Commodity Index Trading Indicator:
For question 14, please answer the following:

14i. Is the reporting trader engaged in commodity index trading as defined in paragraph (a) of the definition of CIT above? YES/NO

14ii. Is the reporting trader engaged in commodity index trading as defined in paragraph (b) of the definition of CIT above? YES/NO

a. If the reporting trader is engaged in CIT (as defined in paragraph (b)) with respect to one or more commodities or commodity groups appearing on Supplemental List II, indicate whether the reporting trader is, in the aggregate, pursuing long exposure or short exposure with respect to such commodities or commodity groups. It is not necessary to respond to this question with respect to CIT that tracks the performance of multiple unrelated commodities or commodity groups (*e.g.*, an investment in an exchange-traded fund that tracks the performance of an index representing commodities spanning multiple commodity groups).

14iii. If the reporting trader is currently engaged in commodity index trading as defined in paragraphs (a) or (b) of the CIT definition above, indicate the month and year on which the reporting trader first became engaged in commodity index trading.

Swaps Participation Indicators
For questions 15 and 16, please indicate if the reporting trader meets the specified definition:

15. Is the reporting trader a Swap Dealer, as defined in § 1.3(ppp) of regulations under the Commodity Exchange Act? YES/NO

16. Is the reporting trader a Major Swap Participant, as defined in § 1.3(qqq) of regulations under the Commodity Exchange Act? YES/NO

Nature of Business and of Derivatives Trading Activities:
For questions 17, 18, and 19 provide the requested information only as applicable.

17. Select all business sectors and subsectors that pertain to the business activities or occupation of the reporting trader. If more than one business subsector is selected, indicate which business subsector primarily describes the nature of the reporting trader's business.

Choose from Supplemental List I

18. Select all commodity groups and individual commodities that the reporting trader presently trades or expects to trade in the near future in derivative markets.

Choose from Supplemental List II

19. For each selected individual commodity identified in question 18, indicate the business purpose(s) for which the reporting trader uses derivative markets. If the reporting trader has more than one business purpose for trading in an individual commodity, also indicate the predominant business purpose.

Choose from Supplemental List III

Signature/Authentication, Name, and Date

20. Please sign/authenticate the Form 40 prior to submitting.

Signature/ Electronic Authentication:

□ By checking this box and submitting this form (or by clicking "submit," "send," or any other analogous transmission command if transmitting electronically), I certify that I am duly authorized by the reporting trader identified below to provide the information and representations submitted on this Form 40, and that the information and representations are true and correct.

Reporting Trader Authorized Representative (Name and Position):

_____ (Name)

_____ (Position)

Submitted on behalf of:

_____ (Reporting Trader Name)

Date of Submission:

_____

Supplemental List I: List of Business Sectors and Subsectors

Business Sector

Subsector

Agriculture and Forestry
- *Oilseed Farming*
- *Grain Farming*
- *Fruit and Tree Nut Farming*
- *Other Crop Farming (Specify)*
- *Cattle Ranching and Farming*
- *Hog and Pig Farming*
- *Poultry and Egg Production*
- *Sheep and Goat Farming*
- *Other Animal Production*
- *Forestry, Logging, or Timber Production*
- *Cooperative*
- *Other (Specify)*

Mining, Oil and Natural Gas Extraction
- *Oil Exploration/Production*
- *Natural Gas Exploration/Production*
- *Coal Mining*
- *Precious Metal Mining*
- *Non-Precious Metal Mining*
- *Other (Specify)*

Utilities
- *Utility/Cooperative*
- *Electric Power Generation*
- *Local Distribution Company*
- *Natural Gas Distribution*
- *Other (Specify)*

Construction
- *Building Construction*
- *Heavy and Civil Engineering Construction*
- *Other (Specify)*

Manufacturing, Refining and Processing
- *Animal Food Manufacturing*
- *Grain Milling*
- *Oilseed Milling*
- *Sugar and Confectionery Product Manufacturing*
- *Fruit and Vegetable Preserving and Specialty Food Manufacturing*
- *Dairy Product Manufacturing*
- *Animal Slaughtering and Processing*
- *Bakeries*
- *Other Food Manufacturing*
- *Beverage Manufacturing Textile Mills*
- *Textile Product Mills*
- *Apparel Manufacturing*
- *Wood Product Manufacturing*
- *Paper Manufacturing*

Pulp, Paper, and Paperboard Mills
Petroleum and Coal Products Manufacturing
Renewable Fuels Manufacturing
Petrochemical/Chemical Manufacturing
Plastics and Rubber Products Manufacturing
Natural Gas Processing
Precious Metal Processor/Smelter
Non-Precious Metal Processor
Metals Fabricator
Other (Specify)

Wholesale Trade
Lumber and Other Construction Materials Merchant Wholesalers
Metal and Mineral Merchant Dealer
Grocery and Related Product Merchant Wholesaler
Farm Product Raw Material Merchant Wholesalers
Chemical and Allied Products Merchant Wholesalers
Petroleum and Petroleum Products Merchant Wholesalers
Natural Gas, Power Marketer
Importer/Exporter (specify commodities)
Other (Specify)

Retail Trade
Building Materials and Supplies Dealers
Food and Beverage Stores
Jeweler/Precious Metals Retailer
Vehicle Fuel Retailer/Convenience Store Operator
Fuel Dealers
Other (Specify)

Transportation and Warehousing
Air Transport
Trucking
Pipeline Transportation of Crude Oil
Pipeline Transportation of Natural Gas
Farm Product Warehousing and Storage
Energy Distributor (warehousing, storage)
Other (Specify)

End User (*NOTE: May not be the only/primary subsector selected*)
Metals End User (Construction Co., Brass Mill, Steel Mill)
Emissions End User (Factory, Industrial Cos.)
Petroleum End User (Airline Cos. Municipalities, Industrial Cos., Trucking Cos.)

Information
Other (Specify)

Financial Institutions and Investment Management

Dealers and Financial Intermediaries
Broker/Dealer
Bank Holding Company
Investment/Merchant Bank
Non-US Commercial Bank
US Commercial Bank
Swaps/Derivatives Dealer

Universal Bank

Asset/Investment/Fund Management
Asset/Investment Manager
Institutional Clients
Retail Clients
Managed Accounts and Pools (CTAs, CPOs, etc.)
Institutional Clients
Retail Clients
College Endowment, Trust, Foundation
Fund of Hedge Funds
Hedge Fund
Mutual Fund
Pension Fund
Private Wealth Management
Private Bank
Exchange Traded Fund Issuer
Exchange Traded Note Issuer

Government Financial Institution
Central Bank
Sovereign Wealth Fund
Government Sponsored Enterprise (GSE)
Other Governmental Entity (Specify)

Other Financial or Trading Entities
Arbitrageur
Individual Trader/Investor
Floor Broker
Floor Trader
Market Maker
Proprietary Trader
Corporate Treasury
Mortgage Originator
Savings Bank
Credit Union
Insurance Company
Other (Specify)

Real Estate
Other (Specify)

Arts, Entertainment, and Recreation
Performing Arts Companies
Promoters of Performing Arts
Agents and Managers for Artists and Entertainers
Independent Artists, Writers, Performers
Other (Specify)

Accommodation and Food Services
Food Services
Other (Specify)

Public Administration
Administration of Environmental Quality Programs
Administration of Economic Programs

Other (Specify)

Supplemental List II: Commodity Groups and Individual Commodities

Commodity Group

Individual Commodity

GRAINS
- OATS
- WHEAT
- CORN
- RICE

LIVESTOCK/MEAT PRODUCTS
- LIVE CATTLE
- PORK BELLIES
- FEEDER CATTLE
- LEAN HOGS

DAIRY PRODUCTS
- MILK
- BUTTER
- CHEESE

OILSEED AND PRODUCTS
- SOYBEAN OIL
- SOYBEAN MEAL
- SOYBEANS

FIBER
- COTTON

FOODSTUFFS/SOFTS
- COFFEE
- FROZEN CONCENTRATED ORANGE JUICE
- SUGAR
- COCOA

OTHER AGRICULTURAL

REAL ESTATE

CURRENCY

EQUITIES AND EQUITY INDICIES

INTEREST RATES
- TREASURY COMPLEX
- OTHER INTEREST RATE PRODUCTS

OTHER FINANCIAL INSTRUMENTS

PETROLEUM AND PRODUCTS
- JET FUEL
- ETHANOL

BIODIESEL
FUEL OIL
HEATING OIL
GASOLINE
NAPHTHA
CRUDE OIL
DIESEL

NATURAL GAS AND PRODUCTS
NATURAL GAS LIQUIDS
NATURAL GAS

ELECTRICITY AND SOURCES
COAL
ELECTRICITY
URANIUM

PRECIOUS METALS
PALLADIUM
PLATINUM
SILVER
GOLD

BASE METALS
STEEL
COPPER

WOOD PRODUCTS
LUMBER
PULP

CHEMICALS

PLASTICS

EMISSIONS

WEATHER

OTHER (SPECIFY)

Supplemental List III: Business Purposes of Commodity Derivatives Trading

Business Purpose

Definition

Example

Offsetting Cash or Spot Market Input Price Risk
Using derivative markets for commodities that are direct inputs or purchases for your business so as to offset price risk associated with your purchase of these inputs.
E.g. You are a grain processor, so you use wheat futures to offset the price risk incidental to your cash purchases of wheat.

Offsetting Cash or Spot Market Output Price Risk
Using derivative markets for commodities that are direct outputs or sales of your business so as to offset price risk associated with your sale of these outputs.
E.g. You are a gasoline refiner, so you use gasoline futures to offset price risk associated with your production of gasoline.

Offsetting Other Cash or Spot Market Price Risks (Cross Price Risk)
Using derivative markets for a commodity that is not a direct input or output of your business, but which has significant price correlations with the direct inputs or outputs of your business.
E.g. You manufacture ethanol which is used as an additive in and competitor for gasoline as a combustive fuel. While you neither directly consume nor produce gasoline, you may find that the price you receive for your ethanol product is highly correlated with the price of gasoline, and therefore you reduce ethanol price risk by using gasoline futures contracts.

Other Physical Risk Management Strategies
Managing other price risks incidental to the operation of your business or physical assets through the use of commodity derivative markets.
E.g. You are a manufacturer with significant international sales, so you use foreign currency futures to offset risks associated with changes in the competitiveness of your exports and therefore the value of your physical assets such as production plants, land, machinery, etc.

Client Futures/Options Trading
Fulfilling customer/client desire for portfolio diversification or exposure to various asset classes through your activity as a Commodity Pool Operator, Commodity Trading Advisor, or other similar role.
E.g. You collect funds and execute trading strategies through the use of futures/options markets at the expressed intent and for the sole benefit of clients.

Managing Client Swaps Exposure
Reducing risk stemming from holding or executing swaps contracts on behalf of clients or customers through the use of futures/options markets.
E.g. You sell crude oil swaps to a client and agree to accept the risk inherent in the index price. You offset this risk through purchases of crude oil futures, in effect transferring price risk from the client to another market participant.

Making Markets/Providing Liquidity

Engaging in derivatives transactions to assume risk and help transfer ownership of derivative positions from one market participant to another, realizing the bid-ask spread as the return.

E.g. You accept risk by buying and selling futures/options contracts so that other traders can move into and out of positions when they wish. You then find other traders willing to take the other side of those transactions.

Arbitrage

Using derivative markets as part of a strategy designed to realize risk-free profit from pricing anomalies.

E.g. You realize that the wheat futures contract is trading at a discount (even after considering storage, transport, etc.) relative to the wheat cash price, and therefore find it profitable to purchase the wheat futures contract, take delivery, and then resell the wheat in the cash market for a risk-free profit.

Establishing Price Exposure

Using derivative markets as a way to express your belief in the future movement of market prices. This strategy does not involve offsetting risks incidental to your business, but instead involves directional trading.

E.g. You conduct research and believe that crude oil prices are due to rise, so you take long futures positions in crude oil to profit from your predictions.

Financial Asset Management

Using derivatives to diversify, rebalance, or otherwise allocate financial assets so that risks to the value of the investment portfolio are reduced. This strategy is used by entities such as pension funds and endowments to manage overall risk to their financial portfolios.

E.g. You hold Treasury bonds as a component of your investment portfolio, and use futures contracts to reduce overall portfolio risk that would result from falling bond prices.

Managing Proprietary Swaps Exposure

Reducing risk stemming from your proprietary holding or execution of swaps contracts through the use of futures/options markets.

E.g. You trade interest rate swaps as part of your business or investment strategy, and offset some of the risk inherent in those swaps through your use of Eurodollar futures markets.

Other: Specify

List and explain your business purpose if the above categories do not adequately describe the reason you trade in a particular commodity derivative market.

CFTC FORM 71
IDENTIFICATION OF
OMNIBUS ACCOUNTS AND SUB-ACCOUNTS

NOTICE: Failure to file a report required by the Commodity Exchange Act ("CEA" or the "Act")[185] and the regulations thereunder,[186] or the filing of a report with the Commodity Futures Trading Commission ("CFTC" or "Commission") that includes a false, misleading or fraudulent statement or omits material facts that are required to be reported therein or are necessary to make the report not misleading, may (a) constitute a violation of § 6(c)(2) of the Act (7 USC 9, 15), § 9(a)(3) of the Act (7 USC 13(a)(3)), and/or § 1001 of Title 18, Crimes and Criminal Procedure (18 USC 1001) and (b) result in punishment by fine or imprisonment, or both.

PRIVACY ACT NOTICE

The Commission's authority for soliciting this information is granted in sections 4a, 4c(b), 4g, 4i and 8 of the CEA and related regulations (*see*, *e.g.*, 17 CFR § 17.01(c)). The information solicited from entities and individuals engaged in activities covered by the CEA is required to be provided to the CFTC, and failure to comply may result in the imposition of criminal or administrative sanctions (*see*, *e.g.*, 7 U.S.C. §§ 9 and 13a-1, and/or 18 U.S.C. 1001). The information requested is most commonly used in the Commission's market and trade practice surveillance activities to (a) provide information concerning the size and composition of the commodity derivatives markets, (b) permit the Commission to monitor and enforce speculative position limits and (c) enhance the Commission's trade surveillance data. The requested information may be used by the Commission in the conduct of investigations and litigation and, in limited circumstances, may be made public in accordance with provisions of the CEA and other applicable laws. It may also be disclosed to other government agencies and to reporting markets to meet responsibilities assigned to them by law. The information will be maintained in, and any additional disclosures will be made in accordance with, the CFTC System of Records Notices, available on www.cftc.gov.

[185] 7 U.S.C. section 1, *et seq*.

[186] Unless otherwise noted, the rules and regulations referenced in this notice are found in chapter 1 of title 17 of the Code of Federal Regulations; 17 CFR Chapter 1 *et seq*.

BACKGROUND & GENERAL INSTRUCTIONS

Who Must File a Form 71 – 17 CFR § 17.01(c) requires each originator of (a) an omnibus volume threshold account or (b) an omnibus reportable sub-account (collectively, "Reporting Parties") to file a Form 71 – Identification of Omnibus Accounts and Sub-Accounts with the Commodity Futures Trading Commission ("CFTC" or "Commission").

When to file – Each Reporting Party must file a Form 71 on call by the Commission or its designee.

Where to file – The Form 71 shall be filed by submitting the completed form to the nearest CFTC office or as otherwise instructed by the Commission or its designee. Generally, a Form 71 should be submitted via the CFTC's web-based Form 71 submission process at [www.cftc.gov]. If submission attempts fail, the reporting trader shall contact the Commission at [techsupport@cftc.gov] for further technical support.

Signature – Each Form 71 submitted to the Commission must be signed or otherwise authenticated by an individual that is duly authorized by the relevant Reporting Party to provide the information and representations contained in the form.

What to File – Each Reporting Party must complete part A, the relevant question in part B, and part C. Unless otherwise noted, the terms used herein shall have the same meaning as ascribed in parts 15 to 21 of the Commission's regulations.

Please be advised that pursuant to 5 CFR § 1320.5(b)(2)(i), you are not required to respond to this collection of information unless it displays a currently valid OMB control number.

ACKNOWLEDGEMENT OF DEFINITIONS

Before proceeding with your submission, please check this box to indicate that you have read the definitions for the following terms, as they are used in the Form 71: ☐

Commodity (or commodities) – generally, all goods and articles (except onions and motion picture box office receipts, or any index, measure, value, or data related to such receipts), and all services, rights, and interests (except motion picture box office receipts, or any index, measure, value, or data related to such receipts) in which contracts for future delivery are presently or in the future dealt in (*see* 7 USC 1a(9)).

Omnibus account – any trading account that one futures commission merchant, clearing member or foreign broker carries for another and in which the transactions of multiple individual accounts are combined. The identities of the holders of the individual accounts are not generally known or disclosed to the carrying firm.

Omnibus reportable sub-account – means any trading sub-account of an omnibus volume threshold account, which sub-account executes reportable trading volume on an omnibus basis. Omnibus reportable sub-account also means any trading account that is itself an omnibus account, executes reportable trading volume, and is a sub-account of another omnibus reportable sub-account.

Omnibus volume threshold account – means any trading account that, on an omnibus basis, executes or receives via allocation or give up, reportable trading volume on or subject to the rules of a reporting market that is a board of trade designated as a contract market under § 5 of the Act or a swap execution facility registered under § 5h of the Act.

Person – an individual, association, partnership, corporation, trust, or government agency and/or department.

Reportable sub-account – means any trading sub-account of an omnibus volume threshold account or omnibus reportable sub-account, which sub-account executes reportable trading volume.

Reportable sub-account controller – means a natural person who by power of attorney or otherwise actually directs the trading of a reportable sub-account. A reportable sub-account may have more than one controller.

Reportable trading volume – means contract trading volume that meets or exceeds the level specified in 17 CFR § 15.04.

Volume threshold account – means any trading account that executes, or receives via allocation or give up, reportable trading volume on or subject to the rules of a reporting market that is a board of trade designated as a contract market under § 5 of the Act or a swap execution facility registered under § 5h of the Act.

CFTC FORM 71

A. **Re-confirmation of Omnibus Volume Threshold Account or Omnibus Reportable Sub-Account:**

Account number [(auto-populated)] was identified on Form [[102B] OR [71] (auto-populated)] by [[clearing member] OR [preceding originator] (auto-populated)] as an [[omnibus volume threshold account] OR [omnibus reportable sub-account] (auto-populated)] on [reporting market (auto-populated)].

The following information was provided on Form [[102B] OR [71] (auto-populated)] regarding you as the originator ("Originator") of this [[omnibus volume threshold account] OR [omnibus reportable sub-account] (auto-populated)]. Please update any incorrect information in the space provided below.

Name of Originator: [(Fields below will be auto-populated)] [space to correct incorrect info]
Street Address:
City:
State:
Country:
Zip/Postal Code:
Phone Number:
Contact Name:
Contact Job Title:
Contact Relationship to Originator:
Contact Phone Number:
Contact Email Address:
Originator Website (if any):
Originator NFA ID (if any):
Originator Legal Entity Identifier (if any):

B. Identification of Reportable Sub-Accounts:

The following questions request information regarding the allocation of trades from account number [[omnibus volume threshold account number] OR [omnibus reportable sub-account number] (auto-populated)] on [date (auto-populated)] on [reporting market (auto-populated)] to other accounts.

1. If you did not allocate any trades from account number [(auto-populated)] on [date (auto-populated)] on [reporting market (auto-populated)], check this box and proceed to part C: □

2. If you allocated trades from account number [(auto-populated)] on [date (auto-populated)] on [reporting market (auto-populated)], but the sum of allocations did not result in reportable trading volume for a recipient account on [date (auto-populated)], check this box and proceed to part C: □

3. If you allocated trades from account number [(auto-populated)] on [date (auto-populated)] on [reporting market (auto-populated)] that resulted in reportable trading volume for a recipient account, provide the following information for each such recipient account (hereafter, a "reportable sub-account"):

(a) Identification of Omnibus Reportable Sub-Accounts.

(i) Is the reportable sub-account an omnibus reportable sub-account?

□ YES

□ NO

(ii) If NO, proceed to (b) below. If YES, indicate whether the omnibus reportable sub-account is a house or customer omnibus account and provide the contact information of the originator of the omnibus account.[187]

□ HOUSE

□ CUSTOMER

Name of Reportable Sub-Account Originator:
Account Number of Reportable Sub-Account:[188]
Street Address:
City:
State:
Country:
Zip/Postal Code:
Phone Number:
Contact Name:
Contact Job Title:
Contact Relationship to Originator:
Contact Phone Number:
Contact Email Address:
Originator Website (if any):
Originator NFA ID (if any):
Originator Legal Entity Identifier (if any):

(b) Identification of Non-Omnibus Reportable Sub-Accounts:

(i) For each reportable sub-account that is not an omnibus account, provide the requested information for each owner ("owner") of the reportable sub-account.

Indicate whether the owner is a legal entity or a natural person:

Legal entity: □

Natural person: □

Name of Reportable Sub-Account Owner(s):
Street Address:
City:
State:
Country:
Zip/Postal Code:
Phone Number:

[187] House omnibus accounts exclusively contain the proprietary accounts of the omnibus account originator. Customer omnibus accounts contain the accounts of customers of the omnibus account originator. It is the obligation of the omnibus account originator to correctly identify the omnibus account type to the reporting entity.

[188] The Account Number should be a number or other identifier that is known to the reportable sub-account originator.

Email Address (if owner is a natural person):
Contact Name (if owner is not a natural person):
Contact Job Title:
Contact Relationship to Owner:
Contact Phone Number:
Contact Email Address:
Owner Website (if any):
Owner NFA ID (if any):
Owner Legal Entity Identifier (if any):

(ii) For each reportable sub-account that is not an omnibus account, provide the requested information for each reportable sub-account controller. (NOTE: a reportable sub-account controller must be a natural person.)

Name of Reportable Sub-Account Controller(s):
Street Address:
City:
State:
Country:
Zip/Postal Code:
Phone Number:
Name of Employer:
Job Title:
Relationship to Owner:
Email Address:
Controller NFA ID (if any):

After completing the applicable questions in part B.3, proceed to part C.

C. Signature/Authentication, Name, and Date:

Please sign/authenticate the Form 71 prior to submitting.

Signature/ Electronic Authentication of [Originator (auto-populated)]:

□ By checking this box and submitting this form (or by clicking "submit," "send," or any other analogous transmission command if transmitting electronically), I certify that I am duly authorized by [Originator (auto-populated)] to provide the information and representations submitted on this Form 71, and that the information and representations are true and correct.

Authorized Representative (Name and Position):

_____ (Name)

_____ (Position)

Submitted on behalf of:

_____ [Originator (auto-populated)]

Date of Submission:

_____

[FR Doc. 2012–16180 Filed 7–25–12; 8:45 am]
BILLING CODE C

FEDERAL REGISTER

Vol. 77 Thursday,

No. 144 July 26, 2012

Part V

Department of Defense
General Services Administration
National Aeronautics and Space Administration

48 CFR Chapter 1

Federal Acquisition Regulation; Final Rules

DEPARTMENT OF DEFENSE

GENERAL SERVICES ADMINISTRATION

NATIONAL AERONAUTICS AND SPACE ADMINISTRATION

48 CFR Chapter 1

[Docket FAR 2012–0080, Sequence 5]

Federal Acquisition Regulation; Federal Acquisition Circular 2005–60; Introduction

AGENCIES: Department of Defense (DoD), General Services Administration (GSA), and National Aeronautics and Space Administration (NASA).

ACTION: Summary presentation of final and interim rules.

SUMMARY: This document summarizes the Federal Acquisition Regulation (FAR) rules agreed to by the Civilian Agency Acquisition Council and the Defense Acquisition Regulations Council (Councils) in this Federal Acquisition Circular (FAC) 2005–60. A companion document, the *Small Entity Compliance Guide* (SECG), follows this FAC. The FAC, including the SECG, is available via the Internet at *http://www.regulations.gov.*

DATES: For effective dates and comment dates see separate documents, which follow.

FOR FURTHER INFORMATION CONTACT: The analyst whose name appears in the table below in relation to each FAR case. Please cite FAC 2005–60 and the specific FAR case numbers. For information pertaining to status or publication schedules, contact the Regulatory Secretariat at 202–501–4755.

LIST OF RULES IN FAC 2005–60

Item	Subject	FAR Case	Analyst
I	Reporting Executive Compensation and First-Tier Subcontract Awards	2008–039	Clark.
II	Payments Under Time-and-Materials and Labor-Hour Contracts	2011–003	Chambers.
III	Extension of Sunset Date for Protests of Task and Delivery Orders (Interim)	2012–007	Lague.
IV	DARPA–New Mexico Tax Agreement	2012–019	Chambers.
V	Clarification of Standards for Computer Generation of Forms	2011–022	Lague.
VI	Technical Amendments.		

SUPPLEMENTARY INFORMATION: Summaries for each FAR rule follow. For the actual revisions and/or amendments made by these FAR cases, refer to the specific item numbers and subjects set forth in the documents following these item summaries. FAC 2005–60 amends the FAR as specified below:

Item I—Reporting Executive Compensation and First-Tier Subcontract Awards (FAR Case 2008–039)

The interim rule published in the **Federal Register** at 75 FR 39414 on July 8, 2010, is adopted as final with changes. This rule implements section 2 of the Federal Funding Accountability and Transparency Act of 2006 (Pub. L. 109–282), which requires the Office of Management and Budget to establish a free, public, Web site containing full disclosure of all Federal contract award information.

The interim rule required contractors to report executive compensation and first-tier subcontract awards on contracts expected to be $25,000 or more. This information is available to the public.

The final rule removes the exception for inserting the clause in classified solicitations and contracts, or solicitations or contracts with individuals. Classified information is not required to be disclosed. The clause is not prescribed for contracts unless they are required to be reported in the Federal Procurement Data System (FPDS). The final rule clarifies the responsibility of contracting officers to correct data originating from FPDS found by the contractor to be in error when the contractor completes the subcontract report. The definition of first-tier subcontractor is revised to allow contractors greater flexibility to determine their first-tier subcontractors. The rule also clarifies that a contractor must enter Transparency Act data when registering in the Central Contractor Registration (CCR) database and the contractor is required to report its executive compensation in CCR as a part of its annual registration requirement in CCR.

Item II—Payments Under Time-and-Materials and Labor-Hour Contracts (FAR Case 2011–003)

This final rule amends the FAR with regard to payments under time-and-materials and labor-hour contracts. First, the rule harmonizes payment provisions under commercial time-and-materials and labor-hour contracts and non-commercial time-and-materials and labor-hour contracts, largely by having commercial time-and-materials and labor-hour contracts adopt the payment provisions of non-commercial time-and-materials and labor-hour contracts. Second, the rule harmonizes conflicting provisions of the ''Allowable Cost and Payment'' and ''Payments Under Time-and-Materials'' and ''Labor-Hour Contracts'' clauses, which are both prescribed under non-commercial time-and-materials contracts and labor-hour contracts, by using the same periods for invoicing, and submission of the completion voucher as those set forth in the ''Allowable Cost and Payment'' clause. This harmonization will serve to benefit small businesses under time-and-materials and labor-hour contracts by permitting bi-weekly rather than monthly invoicing, and providing contracting officers with the discretion to authorize even more frequent payments.

Item III—Extension of Sunset Dates for Protests of Task and Delivery Orders (FAR Case 2012–007) (Interim)

This interim rule amends the FAR to implement section 825 of the Ike Skelton National Defense Authorization Act for Fiscal Year 2011 (Pub. L. 111–383) and section 813 of the National Defense Authorization Act for Fiscal Year 2012 (Pub. L. 112–81). These statutes extend the sunset date for protests against awards of task or delivery orders to September 30, 2016. There is no effect on Government automated systems.

Item IV—DARPA–New Mexico Tax Agreement (FAR Case 2012–019)

This final rule amends the FAR to add the United States Defense Advanced Research Projects Agency (DARPA) to the list of agencies that have entered into an agreement with the State of New Mexico. The agreement eliminates the

double taxation of Government cost-reimbursement contracts when contractors and their subcontractors purchase tangible personal property to be used in performing services in whole or in part in the State of New Mexico, and for which title to such property will pass to the United States upon delivery of the property to the contractor and its subcontractors by the vendor. Small businesses benefit from this agreement because they will no longer have the administrative effort and cost associated with collecting this tax.

Item V—Clarification of Standards for Computer Generation of Forms (FAR Case 2011–022)

DoD, GSA, and NASA published a proposed rule in the **Federal Register** at 76 FR 79609 on December 22, 2011, to implement the removal of Federal Information Processing Standard (FIPS) 161. FIPS 161 is being removed based on the notice posted in the **Federal Register** at 73 FR 51276 on September 2, 2008, by the Department of Commerce. This is a technical change acknowledging the removal by the Department of Commerce of FIPS 161 and replacement with the American National Standards Institute (ANSI) X12 set of standards. There is no impact to the Government or contractors in establishing ANSI X12 as the new standard. Small businesses will continue to be able to generate forms by computer. No public comments were received on the proposed rule, therefore, the final rule will be published with no changes.

Item VI—Technical Amendments

Editorial changes are made at FAR 1.105–2, 16.301–3, 22.1801, 22.1802, 52.212–5, 52.215–20, 52.222–54, and 52.223–2.

Dated: July 16, 2012.

Laura Auletta,

Director, Office of Governmentwide Acquisition Policy, Office of Acquisition Policy, Office of Governmentwide Policy.

Federal Acquisition Circular (FAC) 2005–60 is issued under the authority of the Secretary of Defense, the Administrator of General Services, and the Administrator for the National Aeronautics and Space Administration.

Unless otherwise specified, all Federal Acquisition Regulation (FAR) and other directive material contained in FAC 2005–60 is effective July 26, 2012, except for Item I, II, and IV which are effective August 27, 2012.

Dated: July 11, 2012.

Richard Ginman,

Director, Defense Procurement and Acquisition Policy.

Dated: July 12, 2012.

Laura Auletta,

Acting Senior Procurement Executive, Office of Acquisition Policy, U.S. General Services Administration.

Dated: July 10, 2012.

Ronald A. Poussard,

Director, Contract Management Division, National Aeronautics and Space Administration.

[FR Doc. 2012–17717 Filed 7–25–12; 8:45 am]

BILLING CODE 6820–EP–P

DEPARTMENT OF DEFENSE

GENERAL SERVICES ADMINISTRATION

NATIONAL AERONAUTICS AND SPACE ADMINISTRATION

48 CFR Parts 1, 2, 4, and 52

[FAC 2005–60; FAR Case 2008–039; Item I; Docket 2010–0093, Sequence 2]

RIN 9000–AL66

Federal Acquisition Regulation; Reporting Executive Compensation and First-Tier Subcontract Awards

AGENCIES: Department of Defense (DoD), General Services Administration (GSA), and National Aeronautics and Space Administration (NASA).

ACTION: Final rule.

SUMMARY: DoD, GSA, and NASA are adopting as final, with changes, the interim rule amending the Federal Acquisition Regulation (FAR) to implement a section of the Federal Funding Accountability and Transparency Act of 2006 as amended by a section of the Government Funding Transparency Act of 2008, which requires the Office of Management and Budget (OMB) to establish a free, public Web site containing full disclosure of all Federal contract award information. This rule requires contractors to report executive compensation, and first-tier subcontractor awards on contracts of $25,000 or more.

DATES: *Effective Date:* August 27, 2012.

Applicability: Contracting officers shall include the FAR clause at 52.204–10, Reporting Executive Compensation and First-Tier Subcontract Awards, in accordance with FAR 4.1403, in solicitations issued on or after the effective date of this rule, and resultant contracts.

Contracting officers shall modify, on a bilateral basis, in accordance with FAR 1.108(d)(3), existing contracts that include the FAR clause implemented in the interim rule dated July 2010, to require contactors to comply with the requirements of this final rule FAR clause, if the contractor will be required to provide another annual report. If the contracting officer is unable to negotiate this modification, the contracting officer shall obtain approval at least one level above the contracting officer to negotiate an alternate resolution.

FOR FURTHER INFORMATION CONTACT: Mr. William Clark, Procurement Analyst, at 202–219–1813 for clarification of content. For information pertaining to status or publication schedules, contact the Regulatory Secretariat at 202–501–4755. Please cite FAC 2005–60, FAR Case 2008–039.

SUPPLEMENTARY INFORMATION:

I. Background

On September 26, 2006, the Federal Funding Accountability and Transparency Act (hereafter referred to as the Transparency Act) (Pub. L. 109–282, 31 U.S.C. 6101 note), was enacted to reduce ''wasteful and unnecessary spending,'' by requiring that OMB establish a free, public Web site containing full disclosure of all Federal award information, for awards of $25,000 or more. The Transparency Act required, by January 1, 2009, reporting on subcontract awards by Federal Government contractors and subcontractors. The Transparency Act's initial phase was conducted as a Pilot Program (Pilot), to test the collection and accessibility of the subcontract data. In order to implement the Pilot, a proposed rule was published in the **Federal Register** at 72 FR 13234, on March 21, 2007, under FAR Case 2006–029.

A final rule implementing the Pilot was published in the **Federal Register** at 72 FR 51306, on September 6, 2007. Exempted from the Pilot were solicitations and contracts for commercial items issued under FAR part 12 and classified solicitations and contracts. To minimize the burden on Federal prime contractors and small businesses, the Pilot applied to contracts with a value greater than $500 million and required the awardees to report all subcontract awards exceeding $1 million to the Transparency Act database at *www.esrs.gov.* The Pilot terminated January 1, 2009.

On June 30, 2008, section 6202 of Public Law 110–252 amended the Transparency Act to require the Director of OMB to include an additional

reporting element requiring contractors and subcontractors to disclose information on the names and total compensation of their five most highly compensated executives.

DoD, GSA, and NASA published in the **Federal Register** at 74 FR 14639, on March 31, 2009, FAR case 2009–009, American Recovery and Reinvestment Act of 2009 (the Recovery Act)—Reporting Requirements, which required contractors receiving a Recovery Act funded contract award to provide detailed information on subcontracts, including the data elements required to comply with the Transparency Act. Although the Transparency Act reporting requirements flow down to all subcontracts, regardless of tier, the Recovery Act limited the reporting on subcontract awards to the contractor's first-tier subcontractors.

DoD, GSA, and NASA published an interim rule for public comment in the **Federal Register** at 75 FR 39414, on July 8, 2010, under FAR Case 2008–039 with the following criteria:

- Subcontract reporting would apply only to first-tier subcontracts.
- The rule would phase-in the reporting of subcontracts of $25,000 or more—
  - Until September 30, 2010, any newly awarded subcontract must be reported if the prime contract award amount was $20 million or more;
  - From October 1, 2010, until February 28, 2011, any newly awarded subcontract must be reported if the prime contract award amount was $550,000 or more; and
  - Starting March 1, 2011, any newly awarded subcontract must be reported if the prime contract award amount was $25,000 or more.
- By the end of the month following the month of award of a contract, and annually thereafter, the contractor shall report the names and total compensation of each of the five most highly compensated executives for the contractor's preceding completed fiscal year.
- Unless otherwise directed by the contracting officer, by the end of the month following the month of award of a first-tier subcontract, and annually thereafter, the contractor shall report the names and total compensation of each of the five most highly compensated executives for the first-tier subcontractor's preceding completed fiscal year.
- There would be a $300,000 gross income exception for prime contractors and subcontractors.
- Data quality requirements would apply to agencies and contractors.

The interim rule required contractors to report subcontracts of $25,000 or more, and any modifications made to those subcontracts which changed previously reported data. The reporting requirements of the Transparency Act are sweeping in their breadth, and are intended to empower the American taxpayer with information that may be used to demand greater fiscal discipline from both executive and legislative branches of Government. The Transparency Act reporting requirements apply to all businesses, regardless of business size or ownership.

Contractors provide these subcontract reports to the Federal Funding Accountability and Transparency Act Subaward Reporting System (FSRS) at *http://www.fsrs.gov.* FSRS is a module of the Electronic Subcontracting Reporting System (eSRS) designed specifically to collect the Transparency Act required data.

Contracting officers will be required to modify existing contracts to cover future orders—see the Applicability section above.

II. Discussion and Analysis

DoD, GSA, and NASA published an interim rule for public comment in the **Federal Register** at 75 FR 39414, on July 8, 2010. The comments, as categorized and summarized below, were considered by the Civilian Agency Acquisition Council and the Defense Acquisition Regulations Council (''the Councils'') in the formation of a final rule.

A. Disclosure of Executive Compensation
B. Definitions
C. Thresholds
D. Paperwork Burden
E. Applicability
F. Subcontract Award Data
G. Impact on Small Businesses
H. Reporting System
I. Other Concerns About the Rule

A. Disclosure of Executive Compensation

Comment: A number of respondents objected to the reporting of total compensation, as required by the rule, for several reasons including that total compensation is generally not allowable under FAR 31.205–6 or cost-reimbursement contracts, such information is outside the scope of the taxpayer's interest, and the information will have no practical utility. Another respondent believed that the rule should be updated with a provision that subcontractors who submit executive compensation information to the Defense Contract Audit Agency (DCAA) need not provide it to prime contractors. A respondent requested that the rule be clarified to provide that only the allowable portion of an officer's salary is reported. Several respondents stated that total executive compensation is already being reported to the Government annually through an incurred cost submission (see FAR 52.216–7(d)).

Response: The public disclosure of executive compensation information implemented under this rule is a statutory requirement. The law does not limit reporting to the amount funded or reimbursed by Federal funds, nor does the law make an exception for situations in which a contractor or subcontractor is already reporting executive compensation through an incurred cost submission. Therefore, the Councils cannot create such an exception. Moreover, information reported to DCAA is not public information, and DCAA is not authorized to release that information. No change to the rule is required.

Comment: A number of respondents were concerned that publishing executive compensation information will create discord, envy, and turnover.

Response: The public disclosure of executive compensation information implemented under this rule is a statutory requirement. Contractors have publicly disclosed executive compensation through the Securities Exchange Act (SEC) of 1934 15 U.S.C. 78m(a), 78o(d) or section 6104 of the Internal Revenue Code of 1986 for years through periodic reports, prior to the advent of the Transparency Act.

Comment: A respondent stated that most commercial companies lack the required systems to track, monitor, and calculate the required compensation information requested for prime contractors and their first-tier subcontractors. Two respondents thought that the requirements will be burdensome because small businesses, including first-tier subcontractors, are unaccustomed to such requirements and do not have infrastructure in place to comply.

Response: There may be some burden (*i.e.,* one-time start-up cost for the infrastructure to collect or report the information should be a one-time cost) associated with the reporting required by this rule. Additionally, the Councils have revised the rule at FAR 52.204–10(a) to lessen the potential burden by clarifying the definition of ''first-tier subcontractor.''

Comment: A number of respondents believed that executive compensation information is proprietary. They suggested that this type of information is not currently disclosed to the public,

even pursuant to Freedom of Information Act (FOIA) requests.

Response: The public disclosure of executive compensation information implemented under this rule is a statutory requirement mandated by Congress. This statute has created an exception to the usual practices for handling contractor proprietary information. The FOIA exemption for contractor proprietary information does not forbid release of this information.

Comment: A respondent stated that making the amount of an employee's compensation available to their Government counterparts may have a significantly detrimental impact on these critical working relationships.

Response: This rule implements a statutory requirement for the disclosure of executive compensation.

Comment: A number of respondents stated that disclosure of executive compensation may translate into safety issues for the executives, their families, and potentially, U.S. Government personnel outside the United States. The respondents opined that executives or their families could be subject to extortion, blackmail, or kidnap as a result of these disclosures.

Response: The public disclosure of executive compensation information implemented under this rule is a statutory requirement. This rule does not require contractors to disclose the home addresses of executives or U.S. Government personnel.

Comment: A number of respondents stated that disclosing compensation information will create risk that a company may lose its key personnel to raiding by competitors. According to the respondents, this potential outcome will drive some contractors and subcontractors out of the Government contracting arena and, by implication, deprive the Federal Government of access to cutting edge technologies and ideas, and increase the Government's costs by reducing competition. These respondents also suggested that competitors may be able to use compensation data for executives who serve multiple roles to determine their pricing strategies. These respondents further opined that competitors who fall below the reporting threshold set forth in the rule will have an unfair advantage.

Response: Disclosure of executive compensation could have some anti-competitive aspects, which may ultimately result in increased contract costs for the Government and the taxpayer. However, the public disclosure of executive compensation information implemented under this rule is a statutory requirement mandated by Congress. The disclosure of such information was established in order to increase transparency in Government contracting. The exceptions to the disclosure requirement implemented in the rule such as the 80 percent/$25 million exception, the $300,000 gross income exception, and the definition of ''first-tier subcontract,'' will substantially reduce the number of contractors that would otherwise be required to report such information.

Comment: A number of respondents expressed the view that ''providing this information or any other type of proprietary data to prime contractors could jeopardize a contractor's competitive position''. Those respondents stated that it is not unusual for a subcontractor to be a prime contractor on one effort, and competing with that same contractor on another effort. The respondents further opined that the Government has typically not asked that subcontractors provide such proprietary information to prime contractors. Another respondent noted that ''* * * currently this data is being requested and stored on a public facing Web site'' (*www.ccr.gov*), and questioned how the Government would ensure that the data is protected from hackers or inadvertently disclosed by a contracting officer.

Response: The correct interpretation of the nature of the statute and rule is that prime contractors will not hold the information to themselves, but instead must enter the information into a database; the compensation information will be available on the internet to everyone as public information.

Comment: A number of respondents recommended revising the rule to require a flowdown clause to allow subcontractors to report executive compensation directly to the Government. They indicated that flowing down the requirement would reduce the administrative burden on the prime. One respondent recommended a ''safe harbor'' for prime contractors to address situations in which subcontractors fail to provide the information, so that any failure does not reflect negatively on the prime contractor's performance evaluation. A respondent recommended revision of the rule expressly permitting prime contractors to rely on their subcontractors' determinations as to whether they must disclose compensation data under the rule.

Response: The Federal Government has no privity of contract with subcontractors and is therefore reluctant to establish communication channels that could potentially be construed as creating a contractual relationship. The Federal Government has privity of contract only with the prime contractor. Therefore, the prime contractor will be held accountable for ensuring that their subcontractors provide the necessary information for contract compliance. Because Transparency Act reporting is statutorily required, compliance with reporting should remain a consideration as a past performance evaluation element.

Comment: A respondent indicated that no process exists to ensure accuracy in reporting executive compensation, either to verify or monitor the accuracy of reported information. Several respondents requested clarification of the contractor's obligation to verify the accuracy of its subcontractor's information. One stated that the prime cannot guarantee the accuracy of the disclosures and should not be responsible for their accuracy.

Response: The law requires a searchable Web site for reporting, and FSRS at *www.fsrs.gov,* is the reporting tool used by the Federal Government to reduce contractor burden. One of the features of FSRS that will mitigate the burden of prime contractor reporting of first-tier subcontractor executive compensation is the capability of the FSRS system to pre-populate FSRS entries with information from other Government systems including the Central Contractor Registration (CCR). Furthermore, the clause at FAR 52.204–10(d)(3) indicates that the prime contractor is required to report the names and total compensation of the five most highly compensated executives for each first-tier subcontractor. The prime contractor should (1) hold first-tier subcontractors responsible for complying with this contractual reporting requirement under its contract with the Federal Government; and (2) hold the first-tier subcontractor responsible for guaranteeing the accuracy of the compensation information.

Comment: A respondent recommended that the rule end the prime contractor's obligation to report first-tier subcontractor information upon completion of the subcontract.

Response: The final rule was revised at FAR 52.204–10(f) and requires reporting first-tier subcontractor's information (including executive compensation) at least once, but further reporting is not required upon the completion of the first-tier subcontract.

Comment: Several respondents noted that all contractors, whether large or small, are required to provide the requested compensation data on the CCR. They opined that it is redundant to ask prime contractors to submit data

on their first-tier subcontractors in *www.fsrs.gov* when such information already resides in the CCR. Those respondents also stated that since all contractors are required to furnish compensation data on the CCR, the Government should consider eliminating the requirement for the prime contractor to report its subcontractor's compensation data on *http://www.fsrs.gov.*

Response: The Transparency Act requires that information on Federal awards (Federal financial assistance and expenditures) be made available to the public via a single, searchable Web site, which is *www.USASpending.gov.* FSRS is the reporting tool Federal prime awardees (*i.e.,* prime contractors and prime grants recipients) use to capture and report subaward and executive compensation data regarding their first-tier subawards to meet the Transparency Act reporting requirements. To ensure consistency between the *FSRS.gov* system and other Government systems, the *FSRS.gov* system is designed to pull in data from other feeder systems (*e.g.,* CCR). There is no requirement for subcontractors to be in CCR. Thus, it is not the case that all subcontractors will be in CCR. So, eliminating the requirement for the prime contractor to report its subcontractor's compensation data on *http://www.fsrs.gov* would not allow the Government to meet the intent of the Transparency Act. The prime needs to report the first-tier subcontractor information at *http://www.fsrs.gov.* However, if a first-tier subcontractor is otherwise registered in CCR, the first-tier subcontractor's executive compensation information from their CCR record may be pulled into the prime contractor's FSRS report when the prime contractor enters the first-tier subcontractor's information as it appears in the CCR record. The Councils added clarification language at FAR 52.204–7 to make contractors aware that data may be required by the Transparency Act when registering in CCR. Also, a corresponding change was made at FAR subpart 2.1.

Comment: Several respondents believed that the rule and CCR guidance conflict when it comes to defining the public company exemption, and recommended that the final rule and CCR guidance be reissued to define the contractor's executive compensation to include ''all affiliates''. A respondent recommended that the rule be revised to state that reporting is not required if the total compensation of the contractor's executives or the executives of its parent company (in the case of wholly owned subsidiaries) is already available to the public, regardless of whether it was filed with the U.S. Government, a State government, or a foreign government. One respondent believed that the rule appropriately places the disclosure requirement with the entity that receives the contracts.

Response: The rule and CCR guidance do not conflict. CCR requires reporting of executive compensation, under certain circumstances, by the legal entity to which this specific CCR record, represented by a Data Universal Numbering System (DUNS) number, belongs. The rule requires reporting by the contractor. The contractor is the legal entity that signed the contract. The contractor, except in certain circumstances as specified in FAR 4.605(b), has to have a DUNS number to be a Government contractor and receive a contract award. There may be legal entities that are not publicly traded but are wholly owned by public companies. However, the statute did not make an exception for reporting of a legal entity at lower levels of a publicly traded company if the parent company already discloses the executive compensation through the Securities and Exchange Commission (SEC) reporting. The exceptions for reporting executive compensation are based in the statute. Therefore, the Councils cannot create an exception for information already available through other sources. No change to the rule is required.

Comment: A respondent indicated that in order to keep total compensation information confidential within the company, the rule forces the company to limit internal access to the CCR system. This will require the respondent to modify its existing business practices, and to restrict access away from individuals whose job responsibilities normally include accessing and updating the CCR system.

Response: The respondent's possible internal adjustments to comply with reporting requirements of the rule are noted. However, even though the information will not be viewable in CCR by the general public, the executive compensation will be made public (including to contractor employees), if not already as a result of SEC filings, through other Government systems (*e.g., USASpending.gov*) when matched with a Federal award to that company.

Comments: Several respondents requested that the subsidiaries of a parent company limit the executive compensation reporting to the parent company. A respondent had a concern with the reporting requirement, and its effect on joint ventures since there are no officers in a joint venture. Several respondents requested modification to the reporting requirements to exempt from reporting institutions of higher education, hospitals, other non-profit organizations and organizations that do not have salaries or other compensation as defined in the rule. A respondent requested changes in the exemption for reporting the percentage and amounts of annual gross revenue, and potential for disparities in reporting between companies. The respondent also requested clarification on an exemption when the executive compensation was provided in the last completed fiscal year.

Response: The thresholds and exemptions in the rule at FAR 52.204–10(d)(1), (d)(3), and (g) are based in the statute. The Transparency Act reporting requirements apply to all businesses, regardless of business size or ownership, and the Act did not make exceptions for subsidiaries of a parent company, joint ventures, institutions of higher education, hospitals, and other non-profit organizations. The disclosure of executive compensation is required annually for individuals who manage the contractor entity. Thus, the reporting requirement includes officers, executives, and other individuals who perform management functions for the contractor even though they may not have a formal title. Additionally, the Transparency Act established the gross revenue amounts that are reflected in the rule.

Comment: A number of respondents submitted general comments regarding the rule's executive compensation reporting requirements. A respondent was concerned about the rationale behind the rule and believed that it is ''pure politics.'' Several respondents had concerns about the rule's impact on acquisitions under the Recovery Act, and the rule's disclosure requirements. A respondent was concerned that the Recovery Act procurement contracting officers required the disclosure information with an offeror's response to a request for proposal, but noted that neither the interim rule nor the Transparency Act provides for such disclosure. The respondent requested that the Councils issue guidance stating that the disclosure information is only required postaward. A respondent was concerned that the rule overestimates the degree to which contractors are already reporting the disclosure requirements under the Recovery Act, and believed that the Councils' reliance upon the Recovery Act as a substitute for rulemaking required by the Transparency Act, and the Government Funding Transparency Act is improper. The respondent believed that the Councils obscured the application of the reporting requirements, and negatively

impacted contractors' understanding of their application to other Federal procurements by imposing the disclosure requirements for the first time under the Recovery Act. The respondent suggested that the rule be amended to allow the Councils additional time to fully consider important comments, and contractors' time to prepare and assess the implication of the reporting requirements.

Response: The impetus for the rule is the Federal Funding Accountability and Transparency Act of 2006 (Transparency Act), which is intended to empower every American with the ability to hold the Government accountable for each spending decision. With respect to the respondent requesting guidance stating that the disclosure information is only required postaward, FAR 52.204–10(c)(2) and (c)(3) (now (d)(1) and (d)(3)) provide disclosure requirements. FAR 52.204–10(d)(1) requires a prime contractor as a part of its annual registration requirement in the CCR database to report the names and total compensation of each of its five most highly compensated executives for its preceding completed fiscal year. FAR 52.204–10(d)(3) requires that the prime contractor disclose first-tier subcontract information by the end of the month which follows the month of award of a first-tier subcontract award with a value of $25,000 or more, and annually thereafter. The decision to proceed with implementation of this rule is not based on an overestimate of the degree to which contractors are already reporting the disclosure requirements under the Recovery Act. After publication of FAR Case 2006–029, and implementation of the Recovery Act (inclusive of reporting prime and first-tier subcontractors' total compensation for the five most highly compensated executives), published under FAR case 2009–009, there was a reasonable basis for implementation of the Transparency Act. Additionally, as stated in the interim rule, the Councils implemented the Transparency Act in a phased-in approach to allow for a more manageable Transparency Act implementation.

B. Definitions

Comments: Several respondents were concerned with the rule's use of the term ''executive.'' Generally, the respondents believed that the rule's definition could cause non-executive employees to face public disclosure of their compensation. The respondents pointed out that the statute is limited to ''officers,'' and urged the Councils to narrow the definition to ''corporate officers'' or ''partners'' of the company.

Response: The statute used both terms ''officer'' and ''executive.'' To avoid any ambiguity, the FAR only uses ''executive''. The disclosure requirement is for the compensation of individuals who manage the contractor entity. Thus, the reporting requirement includes officers, executives, and other individuals who perform management functions for the contractor even though they may not have a formal title. By defining ''executive'' to mean officers, managing partners, or any other employees in management positions, the rule provides the contractor with the maximum flexibility to determine its executives for the purposes of the reporting requirements.

Comment: Several respondents requested that the Councils define ''subaward'' in a manner consistent with OMB Circular A–110 for an organization that receives Federal grants and contracts. A respondent preferred that the FAR follow the grants guidance, which would require incorporating into the FAR the definition of ''subawards'' in paragraph (ff) of section 2 of Appendix A to OMB Circular A–110, found at 2 CFR 215.2(ff).

Response: The term ''subaward'' does not require definition in the rule for the purpose of consistency with OMB Circular A–110(ff)/2 CFR 215.2(ff), which provides guidance to Federal agencies on the administration of grants to and agreements with institutions of higher education, hospitals, and other non-profit organizations. The term ''subaward'' is not used in the rule, and providing a definition for the term without using it as a function of the rule would not be prudent and could cause confusion.

Comment: A respondent requested that the Councils define the term ''subcontract.'' The respondent stated that the term is only defined in FAR part 44. Another respondent was concerned that the definition of ''first-tier subcontractor'' differs from the definition used in the September 2007 clause, and noted the definition excluded contracts that provide supplies or services benefiting two or more contracts. The respondent recommended revising the definition of ''first-tier subcontract'' to mean ''a subcontract awarded by a contractor solely and directly to furnish supplies or services (including construction) for the performance of a prime contract, but exclude supplier agreements that benefit two or more contracts.'' Another respondent believed that the definition for ''first-tier subcontract'' is unclear, overly broad, and requested that the definition be revised to emphasize that all vendor supply and service agreements are excluded from the rule.

Response: The term ''subcontract'' does not need to be defined, as the definition of ''first-tier subcontract'' is sufficient to meet the intended purpose of the Transparency Act. The specific changes of the definition of ''first-tier subcontract'' recommended by the respondents are not necessary, as the recommended changes may restrict the reporting of relevant first-tier subcontracts that should be reported. However, the Councils have made changes at 52.204–10(a) to ensure clarity, and to eliminate the potential that contractors may report long term vendor agreements for material or supplies, which are outside the scope of the core functions of a contractor's contract with the Government.

Comment: A respondent suggested that a definition of ''month of award'' be added to the rule.

Response: The Councils have added a definition of ''month of award'' at 52.204–10(a).

Comment: A respondent was concerned with how contracting officers are interpreting the rule's exclusion of classified contracts. The respondent indicated that contracting officers are interpreting the term to mean contracts where the document itself is classified. To ensure proper implementation of the exemption, the respondent recommended that the rule, in FAR 1.1401 and 1.1403, reference the FAR 2.101 definition for ''classified contract.''

Response: The Councils have revised the rule at FAR 4.1401, 4.1403 and 52.204–10(c) for consistency with the statute, which indicates that nothing in the statute requires disclosure of classified information.

C. Thresholds

Comment: A number of respondents requested that the threshold for including the clause in contracts be increased. One respondent recommended that this clause only apply to sole source contracts over $1 million and competitively awarded contracts over $50 million. Another respondent thought that the Government could report 80 percent of all contract activity by selecting only 20 percent of the largest contracts. A respondent recommended that the Government conduct another pilot program to assess the true cost to report contracts at $25,000, and above to assess the true extent to which reporting such low dollar value subcontracts is useful to the public in reducing wasteful and unnecessary spending.

Response: The Transparency Act requires the full disclosure of all Federal award information for awards of $25,000 or more.

Comment: A respondent wanted to see all the applicability details laid out in a concise flow chart so that all contractors can easily decipher the rule.

Response: The applicability of FAR 52.204–10, Reporting Executive Compensation and First-Tier Subcontract Awards, is clear on its face. Also, additional information is available at *https://www.fsrs.gov/,* which provides responses to frequently asked questions, a user guide, and gives an explanation of FSRS.

Comment: A respondent thought that the rule does not provide sufficient guidance concerning its applicability to indefinite-delivery indefinite-quantity (IDIQ) contracts, and that the rule should be revised to state that the thresholds are to be applied at the order level.

Response: The applicability section of the interim rule published in the **Federal Register** on July 8, 2010, at 75 FR 39414, required that contracting officers modify existing IDIQ contracts on a bilateral basis in accordance with FAR 1.108(d)(3) to include the clause for future orders. This includes modifying blanket purchase agreements under IDIQ contracts. IDIQ contracts include Federal Supply Schedule contracts and task and delivery-order contracts such as Governmentwide acquisition contracts.

D. Paperwork Burden

Comments: A respondent was concerned about the potential unintended and unnecessary burden the rule will have on wholesale distributors who distribute products for hundreds of vendors who will independently report the same information. The respondent believed that the rule will impose additional burdens and costs that will affect the healthcare system in general, as the information required to be reported by prime contractors is duplicative of information separately required of first-tier subcontractors. A respondent was concerned with the rule's assumption that the executive compensation is an annual reporting requirement. The respondent suggested that the Councils' estimate does not take into account time required to provide information from privately held companies, and that the estimated cost is based on the number of firms that may have to report, not the actual number of reports required because of contract awards. The respondent believed that using contract awards is clearly a better basis for estimating the reporting requirements. The respondent also believed that some executive compensation data will need reporting multiple times, and that the rule does not exempt firms that have previously disclosed in the current fiscal year from reporting a second, third, or hundredth time.

Response: The time required to conduct research and obtain information specifically for the disclosure of compensation information, especially from first-tier subcontractors, was not considered in the public reporting burden published with the interim rule. FAR 52.204–10(d) provides that the contractor is required to report the five most highly compensated executives for each first-tier subcontractor. Many of the required subcontract award data elements will be pre-populated by the Government. Information not pre-populated (*e.g.,* first-tier subcontractor name, address, primary place of performance subcontract number, subcontract amount, description of product or service, etc.), should be readily known or available to the contractor to permit ease in reporting. Disclosing compensation and the first-tier subcontract award information may require updating, but such updating will be infrequent and, at best, not more than once a year. The rule will have an impact on all Government contractors including healthcare wholesale distributors. However, because the reporting system is designed to pre-populate disclosures from CCR into FSRS, wholesale distributors will not necessarily independently report the same information for hundreds of vendors that will also disclose the required compensation information. The revisions to the definition of ''first-tier subcontractor'' allow some flexibility for the contractor to determine its first-tier subcontractors. FAR 52.204–10(a) eliminates the potential for contractors reporting vendor agreements that benefit multiple contracts and/or are generally considered a part of a contractor's general and administrative expenses or indirect cost. The reporting requirements are not necessarily new, and were first introduced to Government contractors on September 6, 2007, under FAR case 2006–029, and later on March 31, 2009, as part of the reporting requirements for the American Recovery and Reinvestment Act of 2009, under FAR case 2009–009. The reporting requirements in these FAR cases provided Government contractors, first-tier subcontractors, and those wishing to do business with the Government ample time to anticipate implementation of the statutory reporting requirements, and the ability to comply with the requirements once they became mandatory.

E. Applicability

1. Commercial Items, Including Commercially Available Off-the-Shelf (COTS) Items

Comment: A number of respondents requested that the requirement to disclose executive compensation not apply to commercial item and COTS contracts. The respondents provided various reasons for the request including that the disclosure requirement—

- Conflicts with the Federal Acquisition Streamlining Act of 1994 (Pub. L. 103–355);
- Should not apply to privately held contracts; and
- Is not supported by any evidence of a meaningful nexus between the amount a contractor pays in executive compensation and the likelihood the procuring agency is paying fair and reasonable prices for that contractor's goods and services.

A respondent indicated that FAR 52.204–10, Reporting Executive Compensation and First-Tier Subcontract Awards, is not an applicable commercial item clause as shown in FAR 52.301.

Response: The Transparency Act makes no exception for contracts involving the acquisition of commercial or COTS items, nor does it specifically state applicability to commercial items. The clause is shown as applicable to commercial items in FAR 52.301.

Pursuant to the requirements of 41 U.S.C 1906 (formerly 41 U.S.C. 430), the FAR Council has determined that it is not in the best interest of the Federal Government to exempt commercial item contracts from coverage under this rule, given that the Transparency Act was enacted to reduce ''wasteful and unnecessary spending''. Further, pursuant to the requirements of 41 U.S.C. 1907 (formerly 41 U.S.C. 431(a), and (b)), and 41 U.S.C. 104 (formerly 41 U.S.C. 431(c)) OFPP has determined that it is not in the best interest of the Government to exempt COTS items contracts from coverage under this rule (see 75 FR 39414). The Act required that OMB establish a free, public, Web site containing full disclosure of all Federal contract award information. Therefore, contracts for commercial items and COTS items must be reported.

FAR 52.204–10 is included in 52.212–5, Contract Terms and Conditions Required to Implement Statute or Executive Orders—Commercial Items, which is prescribed at 12.301(a)(4).

Comment: A respondent believed that not exempting commercial items conflicts with the Council's prior interpretation of the Transparency Act. The respondent stated that when establishing the Transparency Act Pilot program (FAR Case 2006–029), the Councils added Transparency Act to the list of laws not applicable to commercial item contracts. The respondent felt that the interim rule should have explained this reversal.

Response: There were decisions made for the purposes of implementing the Pilot on a limited basis that did not establish permanent policy for the implementation of the Transparency Act.

2. Outside the United States

Comment: Some respondents recommended that FAR clause 52.204–10 should be inapplicable to contracts/subcontracts that will be awarded to a company located outside the United States for performance that will take place entirely outside the United States, or for the contracting officer to exempt a class of subcontracts from the reporting requirement to ensure force protection of U.S. Government personnel outside the United States.

Other respondents questioned what can be done if a foreign contractor refuses to sign a modification to incorporate the required clause or foreign subcontractor refuses to comply. In the event that a contractor refuses to accept such a modification, will the contractor be ineligible for award of any work that uses Federal funds?

Response: The Transparency Act reporting requirements apply to all businesses, regardless of business size or ownership. If a business/contractor enters into a contract with the U.S. Government, then the business/contractor is required to abide by the terms and conditions of the U.S. Government contract including this contract reporting requirement.

In the event that a contractor, foreign or otherwise, refuses to accept such a modification, and the contracting officer is unable to negotiate this modification, the contracting officer shall obtain approval at least one level above the contracting officer to negotiate an alternate resolution, as stated in the Applicability section of the preamble.

3. Classified Contracts

Comment: A respondent stated that merely exempting classified contracts from this interim rule is, by itself, inadequate protection of our nation's security interests and needs. The respondent opined that the reporting requirement created by the Transparency Act conflicts with the significant and ongoing efforts throughout the Government to protect sensitive but unclassified information. At a minimum, the respondent recommended that Transparency Act data reporting should exclude any contract that has restrictions on the disclosure of information to foreign nationals.

Response: Congress mandated that the information required by the Transparency Act be made publicly available. This requirement was published as part of the interim rule for comment on July 8, 2010 (75 FR 39414). There appears to be no conflict with the intent of the statute and any ongoing efforts throughout the Government to protect sensitive but unclassified information. Notably, much of the information required for reporting under this rule is already publically available.

4. Other Applicability

Comment: Some respondents questioned the applicability of the rule to commodity IDIQ contracts or firm-fixed-price contracts that are awarded competitively without cost or pricing data.

Response: The Transparency Act did not make an exception to the reporting requirements for commodity IDIQ contracts (including GSA Schedule contracts), or firm-fixed price contracts that are awarded competitively without cost or pricing data.

F. Subcontract Award Data

Comment: A respondent was concerned about the reporting of information, FAR 52.204–10(c)(1)(ix) (now (d)(2)(ix)), which requires the prime to report by prime contract number and order number. The respondent wanted to know if they should provide the subcontractor data not only by prime contract, but by prime contract task/delivery order, as well. A respondent stated that per FAR 52.204–10(c)(1)(xi) (now (d)(2)(xi)), the contractor must provide first-tier subcontract information, including the funding agency name and code. Since many contracts are Governmentwide contract vehicles used by multiple funding agencies, and the respondent wanted to know if they are required to report by prime contract, by task/delivery order, and funding entity as well.

Response: The clause requires the contractor, by the end of the month of award of a first-tier subcontract with a value of $25,000 or more, to report information for the first-tier subcontract. Reporting of the information is required at whatever level the first-tier subcontract is awarded. If the prime signs separate first-tier subcontracts with the same subcontractor valued at $25,000 or more, at both the contract level and the order level, then the information should be reported at both the contract and order level, regardless of funding entity. The clause requires reporting of a separate subcontract number.

Comment: A respondent indicated that it is unfamiliar with the term ''Treasury Account Symbol'' used in FAR 52.204–10(c)(1)(xiii) (now (d)(2)(xiii)). The respondent questioned whether or not the Treasury Account Symbol is the fund cite.

Response: The Treasury Account Symbol reporting element will be pre-populated from FPDS. The fund cite is not captured at the FPDS level, or at FSRS.

Comment: A respondent stated that FAR 52.204–10(c)(1)(xiv) (now (d)(2)(xiv)) requires the North American Industry Classification System (NAICS) code of the prime contract. Furthermore, subparagraph (c)(1)(v) (now (d)(2)(v)) requires a description of the product or services the subcontractor provides under the subcontract, and the NAICS of the prime contract would not necessarily be descriptive enough to provide complete information on the subcontract. The respondent noted that the narrative description alone without a standardized method for reporting the industry/products/services under the subcontract will make it difficult for large and small businesses and industry groups to use the data to find opportunities to perform as subcontractors.

Response: The purpose of the Act is to reduce ''wasteful and unnecessary spending'' by establishing a free, public, online database containing full disclosure of all Federal contract award information. In regard to business opportunities, the primary purpose of notices through the Governmentwide Point of Entry at *http://www.fedbizopps.gov* is to provide large and small businesses access to contracting opportunities.

Comment: A respondent recommended that the rule clarify that the required NAICS code is the code applicable to the prime contract rather than the NAICS code for the subcontract, which may differ.

Response: The NAICS code is pre-populated based on the input of the FPDS information for the contract award. The prime's NAICS code is used for reporting purposes.

Comment: One respondent recommends that every entity receiving Federal funds above some de minimus

amount, regardless of how many degrees removed from the prime contractor, report directly to a centralized Web site, giving the public a full picture of who is receiving Federal contracting dollars.

Response: Although the Transparency Act reporting requirements flow down to all subcontracts, regardless of tier, OMB Memorandum, ''Open Government Directive-Federal Spending Transparency,'' April 6, 2010, directed that the FAR be amended to limit the reporting of subcontract awards to the contractor's first-tier subcontractors.

Comment: Several respondents recommended that the rule be revised to identify what data, if any, in the reporting forms will be pre-populated by the Government and ensure that it is consistently available across the board. Inconsistent pre-population of data fields will greatly burden contractors in designing reports to support the reporting obligation. Another respondent suggested a way to reduce the administrative burden of compliance could include an assurance that all awarding agencies in the Government will provide the appropriate codes necessary for complete reporting, *e.g.* the awarding agency code, the funding agency code, and the Treasury account symbol.

Response: When contracting officers report the contract action to the FPDS in accordance with FAR subpart 4.6, certain data will then pre-populate from FPDS, to assist contractors in completing and submitting their reports. Information on the Web site at *https://www.fsrs.gov/documents/data_definitions_contracts.pdf* specifies which items are pre-populated. In addition, the rule has been revised to indicate that if data originating from FPDS is found to be in error when the contractor completes the subcontract report, the Government contracting officer is responsible for correcting that data in FPDS. However, the contractor is responsible for correcting all other information.

Comment: A respondent recommended that the rule at FAR 52.204–10(c)(1)(v) (now (d)(2)(v)) be revised to modify the reporting requirement to delete the words ''including the overall purpose and expected outcomes or results of the subcontract'' from the information that must be reported. Contractor procurement systems typically contain a brief description of the work required by the contract. The respondent further opined that if a contractor must manually supplement what is captured in its automated system, compliance with the reporting requirement on a timely basis will be virtually impossible.

Response: The Government expects only a brief description of the requirement to comply with this reporting element. In addition, there is a capability in FSRS to allow contractors to connect their system directly to FSRS for electronic system-to-system reporting.

Comment: A respondent recommended that the rule be revised to modify the reporting requirement to avoid the release to the public of proprietary information, such as the aggregate value of all first-tier subcontracts issued under each prime contract. Some respondents stated that the disclosure of subcontracts conflicts with the Federal Trade Secrets Act, 18 U.S.C. 1905, with the FOIA exemption for trade secrets and privileged and confidential commercial, and financial information, 5 U.S.C. 552(b)(4), and with the intent of the Procurement Integrity Act, 41 U.S.C. 423 and implementing regulations at FAR 3.104–4 and 24.202. Several respondents believed that there is no equivalent commercial practice by which such information is collected or reported internally.

Response: Congress mandated that the executive compensation of Government prime contractors and subcontractors be public information under the Transparency Act. The Transparency Act created an exception to the usual handling of contractor proprietary information. The FOIA exemption for contractor proprietary information does not forbid release of this information. The rule does not require the contractor to report any trade secrets, export controlled information, or proprietary information.

Comment: One respondent stated that double reporting under the Recovery Act and the Transparency Act is unnecessary. The respondent recommended that the Councils amend the rule to exempt contractors already reporting under the Recovery Act rules, which would reduce the burden without sacrificing transparency.

Response: Double reporting as required by the Recovery Act and Transparency Act may be necessary under certain circumstances. For American Recovery and Reinvestment Act (ARRA)-funded Federal contracts that are subject to the Transparency Act reporting requirements, the prime recipient will be required to report the ARRA-funded Federal contracts to both *FederalReporting.gov,* and FSRS if the contract so requires.

Comment: A respondent recommended that the follow-on subcontract reporting requirement be amended to provide for a report whenever a modification increases the subcontract to a value of $25,000 or more.

Response: The respondent's recommendation would increase the burden on the public and the Government. However, the Councils revised FAR 52.204–10 to state that the contractor shall not split or break down first-tier subcontract awards to a value less than $25,000 to avoid the reporting requirements.

Comment: One respondent recommended clarification of the reporting responsibilities that apply to prime contractors versus first-tier subcontractors. Another respondent saw the interim rule as unreasonably placing the burden of ensuring subcontractor compliance on prime contractors, and recommends that the information is reported directly to the Government by first-tier subcontractors.

Response: The requirements in the clause apply to the prime contractor. The Federal Government has privity of contract only with the prime contractor. Therefore, the contractor will be held accountable for ensuring their subcontractors provide the necessary information for contract compliance. The prime contractor could encourage its first-tier subcontractor to register in CCR because information in FSRS is pre-populated from CCR. However, the prime contractor should also make the first-tier subcontractor aware that the same data will have to be completed (including criminal proceedings information for the Federal Awardee Performance and Integrity Information System (FAPIIS)), taxpayer identification number, and electronic funds transfer information, as any other registrant.

Comment: A respondent thought that the interim rule could force a prime contractor to breach the terms of a subcontract if the subcontract includes a requirement for nondisclosure agreements and/or ''release of information to the public''. The respondent recommended that the requirement to include the clause only be applied to new solicitations first issued at least 60 days after the effective date of any subsequently issued new rule, so that companies will be able to structure their business transactions with full knowledge of this disclosure requirement.

Response: The interim rule implements a statute. The statute was originally passed in 2006, and amended in 2008 to require reporting of executive compensation. There was a previous FAR case implementing the statute on a

pilot basis. There has been sufficient notice to the public of the requirements that would be implemented in this FAR case (2008–039). The clause as implemented included a phased-in approach to mitigate the impact on the contractor (*e.g.,* business arrangements between prime contractors and subcontractors).

Comment: Some respondents indicated that many reporting elements of the rule conflict with non-disclosure requirements in certain clauses (*e.g.,* 52.227–17(d), DFARS 252.204–7000, etc.). According to the respondents, most agencies require written contracting officer approval before disclosing to the public. The FAR rule must clarify if such preapproval requirement applies, and if it does, provide additional time to obtain such clearance prior to reporting, or provide that any limitation is over-ridden and no longer applicable.

Response: The majority of the information required for reporting in accordance with this rule is publicly available through other Government systems (*e.g.,* CCR, FPDS, etc.), and will be pre-populated by the Government. Information not pre-populated (*e.g.,* first-tier subcontractor name, address, primary place of performance, subcontract number, subcontract amount, description of product or service, etc.), should not conflict with non-disclosure requirements appearing in agency contracts. However, contractors should consult with the contracting officer of the agency contract.

Comment: Two respondents recommended splitting the reporting requirement into two clauses, one for subcontractor reporting and the other for executive compensation.

Response: There is no need to separate the requirements into two clauses, because the requirements are related and the prescription for use of each clause would be the same. The Councils revised the clause to more clearly distinguish the prime contractor's requirements for reporting first-tier subcontractor information and reporting the names and total compensation of each of the five most highly compensated executives for the prime contractor's preceding completed fiscal year in CCR.

Comment: A respondent stated that public disclosure of subcontracts serves no useful purpose. The disclosure of subcontracts on a Government Web site implies the Government plays a role in the selection of subs. The requirement for the prime to list each sub's ''congressional district'' is pernicious, as it implies and invites politicization of the subcontractor selection process.

Response: The disclosure of subcontract information on a Government Web site and reporting the subcontractor's ''congressional district'' is required by the Transparency Act. Such disclosure does not imply a Government role in the selection of subcontractors. However, consent to subcontract is required by the Government in certain circumstances in accordance with FAR subpart 44.2.

Comment: A respondent suggested that a way to reduce the administrative burden of compliance is to automate the reporting process, through an XML upload, as was originally conceived and implemented under section 1512 of the American Recovery and Reinvestment Act.

Response: The FSRS reporting system currently has the capability for an XML upload. Details on this process are at *https://www.fsrs.gov/resources.*

Comment: A respondent suggested that a way to reduce the administrative burden of compliance would be to use a single deadline, such as the anniversary date of the prime award, for the annual update of subcontractor information, as opposed to an update annually from the issue date of each subcontract.

Response: FAR 52.204–10 has been revised to require reporting of the names and total compensation of each of the five most highly compensated executives of the first-tier subcontractor, for the first-tier subcontractor's preceding completed fiscal year, annually based on the prime contract award date.

Comment: A respondent was concerned about the potential penalties concerning violations of the reporting requirements, and how they will be assumed by or imposed on the prime contractor.

Response: Generally, the model for Federal contracts is that the Government will hold prime contractors responsible for performance, and prime contractors hold their subcontractors responsible for performance. Standard contractual remedies apply for failure to perform contractual requirements, as with any other contractual performance requirement in a Federal contract. In accordance with FAR 1.602–2, contracting officers are responsible for ensuring performance of all necessary actions for effective contracting, ensuring compliance with the terms of the contract, and ensuring that contractors receive impartial, fair, and equitable treatment.

G. Impact on Small Businesses

Comment: Several respondents were concerned that the rule puts small businesses and private companies at a competitive disadvantage. A respondent believed that this rule requires that small and private businesses divulge competitive and proprietary information to customers and competitors alike. According to the respondent, these mandatory disclosures and additional new administrative burdens will have a particularly adverse impact on small businesses. A respondent believed that the increased general, administrative, and overhead costs could make it difficult for smaller businesses to vie for Government contracts by reducing the overall competition pool in Government contracting. Another respondent questioned the purpose of the directive. Several respondents thought that the requirements are burdensome because small businesses, including first-tier subcontractors, are unaccustomed to such requirements and do not have infrastructure in place to comply.

Response: The requirements may have some potential impact on small privately held businesses; however, the public disclosure of executive compensation information implemented under this rule is statutory. There are exceptions which will eliminate some companies which would otherwise be covered, such as the 80 percent/$25 million exception, the $300,000 gross income exception, and the definition of ''first-tier subcontract.'' Additionally, changes to the rule summarized at section III. of this preamble may lessen the burden on small businesses.

Comment: Given the unintended yet far-reaching effect the requirements may have upon similarly situated small businesses, a respondent encouraged the Councils to work closely with the Small Business Administration (SBA) in addressing such concerns, or consider the impact the executive compensation reporting requirements rule may have on small business and small business supply chains.

Response: During the FAR rulemaking process, the SBA and the Chief Counsel for Advocacy of the SBA (see Regulatory Flexibility Act, 5 U.S.C. 601, *et seq.*) are afforded an opportunity to review and comment on each FAR rule prior to publication, with the focus of limiting burden on small businesses as much as possible. The Councils consider the comments by SBA and the Chief Counsel for Advocacy of the SBA in the formulation of a FAR rule.

H. Reporting System

Comment: Several respondents expressed concerns about reporting in FSRS. A respondent was concerned that the FSRS system does not automatically notify contracting officers when a report is submitted for review. According to the respondent, with contracting personnel already overburdened, daily checking of the system will be time consuming. The respondent recommended adding an automatic notification process to FSRS. A respondent recommended the use of *Federalreporting.gov,* since contractors are already familiar with that system.

Response: FAR 4.1402 requires the agency to ensure that contractors comply with the reporting requirements of 52.204–10. This allows the agency maximum flexibility to establish the most efficient process to ensure compliance. Additionally, FSRS is not equipped to provide for an automatic notification. In regard to the recommendation to use *Federalreporting.gov,* the reporting requirements of the Transparency Act and the Recovery Act are separate and distinct requirements. Therefore, a decision was made not to use this system.

I. Other Concerns About the Rule

Comment: A number of respondents expressed concern that the rule is costly to the taxpayer and businesses, and questioned how the rule could accomplish the objective of deterring wasteful and unnecessary spending or empower the taxpayer with information that may be used to demand greater fiscal discipline from the executive and legislative branches of Government. The respondents were also concerned with the rule's overall impact on their practice of doing business with the Government.

Response: The requirements are statutory. The changes to the rule summarized at section III. of this preamble may lessen the burden on businesses.

Comment: A respondent believed that complete transparency requires the prime contractors to list their first-tier subcontracts when submitting their bid. The respondent believed the list of first-tier subcontractors needs to be made available to the taxpayers at the time of bid submission. Furthermore, according to the respondent, delaying the reporting of this information until a month after the award allows time for prime and subcontractors in the construction industry to participate in unethical practices.

Response: The Transparency Act, which is the impetus for the rule, contains no requirement for bid information to be made available to the public unless an award is made.

Comment: A respondent believed since the majority of first-tier subcontractors in the health care industry are also prime contractors, they should not have to supply the same information multiple times. The respondent believed that is unduly burdensome for multiple distributers to gather and submit information identical to that which the Government has already received directly from that source. To the extent that the data is not already being collected under the Act, the respondent would incur the costs to provide the needed information.

Response: The Transparency Act may unavoidably require some duplicate data collection. The rule has been revised to the extent possible, in response to public comments, to lessen the burden on contractors. The revisions are summarized later in this preamble. There are also exceptions which will eliminate some companies, which would otherwise be covered, such as the 80 percent/$25 million exception and the $300,000 gross income exception.

Comment: A respondent believed that the preamble to the interim rule was incorrect in stating that FAR clause 52.204–10 flows down to subcontracts. Inclusion of this clause in subcontracts would result in flowing down the subcontract reporting requirement to the second-tier of subcontractors. The respondent felt that the preamble should clarify that the only part of the clause which 'flows' down is the requirement to report executive compensation.

Response: The interim rule preamble stated that OMB directed that the FAR be amended to initiate subcontract award reporting under the Transparency Act. However, OMB Memorandum, ''Open Government Directive-Federal Spending Transparency,'' April 6, 2010, limited the subcontract reporting only to first-tier subcontracts.

Comment: A respondent believed that the final FAR rule should allow contracts awarded under the interim rule to be modified, without consideration, to incorporate the final rule. The respondent believed that this will be less burdensome on the contractors than having two different reporting schemes.

Response: The Applicability section of this preamble provides the direction for modifying existing contracts. This should avoid having two different reporting schemes.

Comment: A respondent believed that the reporting requirements should be extended beyond the first-tier of subcontracts to fully realize transparency in Government contracting.

Response: Extending the reporting requirements beyond the first-tier would significantly increase the burden on subcontractors. OMB directed the implementation of the Transparency Act at the first-tier subcontract level.

III. Summary of FAR Changes

This FAR rule revises 2.101, subpart 4.14, 52.204–7 and 52.204–10 for Transparency Act reporting requirements. A summary of the FAR changes are as follows:

A. FAR 2.101

○ Clarifies that prime contractors must enter Transparency Act data when registering in CCR.

B. FAR Subpart 4.14

○ Revises 4.1401 of the rule for consistency with the statute which exempts ''classified information,'' not ''classified contracts''. The Councils have deleted the exception for ''individuals'', which is not used in the statute for contracts. These changes are required to ensure consistency with the implementation of the statute. The paragraph regarding the phase-in schedule was deleted since all phase-in dates have passed, and this final rule is after that period.

○ Revises 4.1402(b) to clarify the responsibility for correcting any pre-populated data in FSRS.

○ Revises 4.1403 to remove the exception for inserting the clause in classified solicitations and contracts, or solicitations or contracts with individuals. However, the Councils added that the clause is not prescribed for contracts that are not required to be reported in the FPDS.

C. FAR 52.204–7

○ Revises FAR 52.204–7, Central Contractor Registration, to conform to the change at FAR 2.101.

D. FAR 52.204–10

○ Revises the definition of ''first-tier subcontract'' to allow contractors greater flexibility to determine their first-tier subcontractors.

○ Adds a definition of ''month of award''.

○ Adds a paragraph to remind contractors that nothing in this clause requires the disclosure of classified information.

○ Moves text previously at FAR 52.204–10(c)(2) to FAR 52.204–10(d)(1) to ensure the prime contractor's reporting requirements of its executive compensation are discussed in the

clause before the reporting requirements for the first-tier subcontract. In addition, FAR 52.204–10(d)(1) includes a change to conform to the change made at FAR 52.204–7. The prime contractor is required to report its executive compensation in the CCR database as a part of its annual registration requirement in the CCR.

○ Clarifies the 80 percent and $25 million language now at FAR 52.204–10(d)(1)(i) and (d)(3)(i) by adding wording derived from the statute: ''and other forms of Federal financial assistance.''

○ Adds FAR 52.204–10(e) to state that the contractor shall not split or break down first-tier subcontract awards to a value less than $25,000 to avoid the first-tier subcontract reporting requirements.

○ Adds FAR 52.204–10(f), to state that the contractor is required to report information on a first-tier subcontract when the subcontract is awarded. However, continued reporting on the same subcontract is not required unless one of the reported data elements changes during the performance of the subcontract. The Contractor is not required to make further reports after the first-tier subcontract expires. FAR 52.204–10(f) requirements replace and clarify a parenthetical requirement in the interim rule at FAR 52.204–10(c)(1) for the contractor to report on any modification to the first-tier subcontract that changed previously reported data.

○ Relocates text previously at paragraph 52.204–10(d) to paragraph 52.204–10(g).

○ Deletes reference to a phase-in schedule previously at 52.204–10(e), since the phase-in schedule has been completed.

○ Adds a paragraph (h) to clarify responsibility for correcting incorrect data.

IV. Executive Orders 12866 and 13563

Executive Orders (E.O.s) 12866 and 13563 direct agencies to assess all costs and benefits of available regulatory alternatives and, if regulation is necessary, to select regulatory approaches that maximize net benefits (including potential economic, environmental, public health and safety effects, distributive impacts, and equity). E.O. 13563 emphasizes the importance of quantifying both costs and benefits, of reducing costs, of harmonizing rules, and of promoting flexibility. This is a significant regulatory action and, therefore, was subject to review under Section 6(b) of E.O. 12866, Regulatory Planning and Review, dated September 30, 1993. This rule is not a major rule under 5 U.S.C. 804.

V. Regulatory Flexibility Act

DoD, GSA, and NASA prepared a Final Regulatory Flexibility Analysis (FRFA) consistent with 5 U.S.C. 604, *et seq.* The FRFA is summarized as follows:

The Transparency Act was enacted to reduce ''wasteful and unnecessary spending'' by requiring that OMB establish a free, public, online database containing full disclosure of all Federal contract award information. The objective of the rule is to empower the American taxpayer with information that may be used to demand greater fiscal discipline from both executive and legislative branches of Government. According to the sponsors of the Transparency Act, the new database will deter ''wasteful and unnecessary'' spending, since Government officials will be less likely to earmark funds for special projects if they know the public could identify how much money was awarded to which organizations, and for what purposes.

Comments were received that indicated the rule would impact small businesses. The comments covered a number of issues including: The rule disproportionately damages the competitive position of small and medium-sized contractors, and the increased general, administrative, overhead costs could make it difficult for smaller businesses to vie for Government contracts. Other issues are cited in this preamble.

The responses in the preamble point out a number of aspects of the rule that may lessen the impact of the rule on small businesses, including: The lessons learned from issuance of FAR case 2006–029, familiarization from the Recovery Act reporting rule, the exceptions in the rule that exclude some contractors, the revisions to the rule listed in section III. of this preamble, and pre-population of data in FSRS from other Government systems.

The rule applies to all contracts and subcontracts, of $25,000 or more. The clause does not require the disclosure of classified information. The rule requires contractors to report first-tier subcontract award information and annually report the contractor's and first-tier subcontractors' five most highly compensated executives for the contractor and subcontractor's preceding completed fiscal year. To arrive at an estimate of the number of small businesses to which the rule would apply, the Councils queried the FDPS for FY 10 contract award information. DoD, NASA and GSA believe 233,623 is a reasonable estimate of the total number of small businesses, both as prime and first-tier subcontractors to whom the rule will apply.

The rule applies to all, regardless of business size or ownership. The professional skills necessary for the preparation of the report would probably be a company officer or division manager or a company subcontract administrator.

DoD, NASA and GSA considered a number of alternatives that may have lessened the impact on small businesses, but the alternatives would have prevented the full disclosure of all Federal award information for awards of $25,000 or more, as required by the Transparency Act. One alternative of excluding small businesses entirely from the rule would not be feasible, given the objectives of the rule.

Interested parties may obtain a copy of the FRFA from the Regulatory Secretariat. The Regulatory Secretariat has submitted a copy of the FRFA to the Chief Counsel for Advocacy of the Small Business Administration.

VI. Paperwork Reduction Act

The Paperwork Reduction Act (44 U.S.C. chapter 35) applies because this final rule contains information collection requirements. OMB has cleared this information collection requirement under OMB Control Number 9000–0177, titled: Reporting Executive Compensation and First-tier Subcontract Awards in the amount of 75,117 burden hours. Comments on the interim rule as well as the information collection requirement were received and considered in the revisions to both the rule and the collection. DoD, GSA, and NASA published in the **Federal Register** at 77 FR 22766 on April 17, 2012 a revised paperwork burden analysis by increasing the total overall public burden, as a result of analysis of the public comments received. In addition, analysis of public burden comments and changes required to the rule is summarized in this preamble in section II, Discussion and Analysis, under various comment categories, but especially comment category D.

List of Subjects in 48 CFR Parts 1, 2, 4, and 52

Government procurement.

Dated: July 16, 2012.

Laura Auletta,

Director, Office of Governmentwide Acquisition Policy, Office of Acquisition Policy, Office of Governmentwide Policy.

Interim Rule Adopted as Final With Changes

Accordingly, the interim rule amending 48 CFR parts 4, 12, 42, and 52, which was published in the **Federal Register** at 75 FR 39414 on July 8, 2010, is adopted as final with the following changes:

■ 1. The authority citation for 48 CFR parts 1, 2, 4, and 52 is revised to read as follows:

Authority: 40 U.S.C. 121(c); 10 U.S.C. chapter 137; and 51 U.S.C. 20113.

PART 1—FEDERAL ACQUISTION REGULATIONS SYSTEM

1.106 [Amended]

■ 2. Amend section 1.106 in the table following the introductory text, by adding in numerical sequence, FAR segment ''4.14'' and its corresponding OMB Control Number ''9000–0177'', and FAR segment ''52.204–10'' and its corresponding OMB Control Number ''9000–0177''.

PART 2—DEFINITIONS OF WORDS AND TERMS

■ 3. Amend section 2.101, in paragraph (b)(2), in the definition ''Registered in the CCR database'' by revising paragraph (1) to read as follows:

2.101 Definitions.

* * * * *

(b) * * *

(2) * * *

Registered in the CCR database * * *

(1) The contractor has entered all mandatory information, including the DUNS number or the DUNS+4 number, as well as data required by the Federal Funding Accountability and Transparency Act of 2006 (see subpart 4.14), into the CCR database; and

* * * * *

PART 4—ADMINSTRATIVE MATTERS

■ 4. Revise section 4.1401 to read as follows:

4.1401 Applicability.

(a) This subpart applies to all contracts with a value of $25,000 or more. Nothing in this subpart requires the disclosure of classified information.

(b) Reporting of subcontract information will be limited to the first-tier subcontractor.

■ 5. Amend section 4.1402 by revising paragraph (b); and removing from paragraph (d) ''52.204–10(d)'' and adding ''52.204–10(g)'' in its place.

The revised text reads as follows:

4.1402 Procedures.

* * * * *

(b) When contracting officers report the contract action to the Federal Procurement Data System (FPDS) in accordance with FAR subpart 4.6, certain data will then pre-populate from FPDS, to assist contractors in completing and submitting their reports. If data originating from FPDS is found by the contractor to be in error when the contractor completes the subcontract report, the contractor should notify the Government contracting officer, who is responsible for correcting the data in FPDS. Contracts reported using the generic DUNS number allowed at FAR 4.605(b)(2) will interfere with the contractor's ability to comply with this reporting requirement, because the data will not pre-populate from FPDS.

* * * * *

■ 6. Revise section 4.1403 to read as follows:

4.1403 Contract clause.

(a) The contracting officer shall insert the clause at 52.204–10, Reporting Executive Compensation and First-Tier Subcontract Awards, in all solicitations and contracts of $25,000 or more.

(b) The clause is not prescribed for contracts that are not required to be reported in the Federal Procurement Data System (FPDS) (see subpart 4.6).

PART 52—SOLICITATION PROVISIONS AND CONTRACT CLAUSES

■ 7. Amend section 52.204–7 by—

■ a. Revising the date of the clause; and

■ b. In paragraph (a), in the definition ''Registered in the CCR database'' revising paragraph (1) to read as follows:

52.204–7 Central Contractor Registration.

* * * * *

Central Contractor Registration (Aug 2012)

(a) *Definitions.* * * *

Registered in the CCR database * * *

(1) The Contractor has entered all mandatory information, including the DUNS number or the DUNS+4 number, as well as data required by the Federal Funding Accountability and Transparency Act of 2006 (see subpart 4.14), into the CCR database; and

* * * * *

■ 8. Revise section 52.204–10 to read as follows:

52.204–10 Reporting Executive Compensation and First-Tier Subcontract Awards.

As prescribed in 4.1403(a), insert the following clause:

Reporting Executive Compensation and First-Tier Subcontract Awards (AUG 2012)

(a) *Definitions.* As used in this clause:

Executive means officers, managing partners, or any other employees in management positions.

First-tier subcontract means a subcontract awarded directly by the Contractor for the purpose of acquiring supplies or services (including construction) for performance of a prime contract. It does not include the Contractor's supplier agreements with vendors, such as long-term arrangements for materials or supplies that benefit multiple contracts and/or the costs of which are normally applied to a Contractor's general and administrative expenses or indirect costs.

Month of award means the month in which a contract is signed by the Contracting Officer or the month in which a first-tier subcontract is signed by the Contractor.

Total compensation means the cash and noncash dollar value earned by the executive during the Contractor's preceding fiscal year and includes the following (for more information see 17 CFR 229.402(c)(2)):

(1) *Salary and bonus.*

(2) *Awards of stock, stock options, and stock appreciation rights.* Use the dollar amount recognized for financial statement reporting purposes with respect to the fiscal year in accordance with the Financial Accounting Standards Board's Accounting Standards Codification (FASB ASC) 718, Compensation-Stock Compensation.

(3) *Earnings for services under non-equity incentive plans.* This does not include group life, health, hospitalization or medical reimbursement plans that do not discriminate in favor of executives, and are available generally to all salaried employees.

(4) *Change in pension value.* This is the change in present value of defined benefit and actuarial pension plans.

(5) *Above-market earnings on deferred compensation which is not tax-qualified.*

(6) Other compensation, if the aggregate value of all such other compensation (*e.g.,* severance, termination payments, value of life insurance paid on behalf of the employee, perquisites or property) for the executive exceeds $10,000.

(b) Section 2(d)(2) of the Federal Funding Accountability and Transparency Act of 2006 (Pub. L. 109–282), as amended by section 6202 of the Government Funding Transparency Act of 2008 (Pub. L. 110–252), requires the Contractor to report information on subcontract awards. The law requires all reported information be made public, therefore, the Contractor is responsible for notifying its subcontractors that the required information will be made public.

(c) Nothing in this clause requires the disclosure of classified information.

(d)(1) *Executive compensation of the prime contractor.* As a part of its annual registration requirement in the Central Contractor Registration (CCR) database (FAR clause 52.204–7), the Contractor shall report the names and total compensation of each of the five most highly compensated executives for its preceding completed fiscal year, if—

(i) In the Contractor's preceding fiscal year, the Contractor received—

(A) 80 percent or more of its annual gross revenues from Federal contracts (and subcontracts), loans, grants (and subgrants), cooperative agreements, and other forms of Federal financial assistance; and

(B) $25,000,000 or more in annual gross revenues from Federal contracts (and subcontracts), loans, grants (and subgrants), cooperative agreements, and other forms of Federal financial assistance; and

(ii) The public does not have access to information about the compensation of the executives through periodic reports filed under section 13(a) or 15(d) of the Securities Exchange Act of 1934 (15 U.S.C. 78m(a), 78o(d)) or section 6104 of the Internal Revenue Code of 1986. (To determine if the public has access to the compensation information, see the U.S. Security and Exchange Commission total compensation filings at *http://www.sec.gov/answers/execomp.htm.).*

(2) *First-tier subcontract information.* Unless otherwise directed by the contracting officer, or as provided in paragraph (g) of this clause, by the end of the month following the month of award of a first-tier subcontract with a value of $25,000 or more, the Contractor shall report the following information at *http://www.fsrs.gov* for that first-tier subcontract. (The Contractor shall follow the instructions at *http://www.fsrs.gov* to report the data.)

(i) Unique identifier (DUNS Number) for the subcontractor receiving the award and for the subcontractor's parent company, if the subcontractor has a parent company.

(ii) Name of the subcontractor.

(iii) Amount of the subcontract award.

(iv) Date of the subcontract award.

(v) A description of the products or services (including construction) being provided under the subcontract, including the overall purpose and expected outcomes or results of the subcontract.

(vi) Subcontract number (the subcontract number assigned by the Contractor).

(vii) Subcontractor's physical address including street address, city, state, and country. Also include the nine-digit zip code and congressional district.

(viii) Subcontractor's primary performance location including street address, city, state, and country. Also include the nine-digit zip code and congressional district.

(ix) The prime contract number, and order number if applicable.

(x) Awarding agency name and code.

(xi) Funding agency name and code.

(xii) Government contracting office code.

(xiii) Treasury account symbol (TAS) as reported in FPDS.

(xiv) The applicable North American Industry Classification System code (NAICS).

(3) *Executive compensation of the first-tier subcontractor.* Unless otherwise directed by the Contracting Officer, by the end of the month following the month of award of a first-tier subcontract with a value of $25,000 or more, and annually thereafter (calculated from the prime contract award date), the Contractor shall report the names and total compensation of each of the five most highly compensated executives for that first-tier subcontractor for the first-tier subcontractor's preceding completed fiscal year at *http://www.fsrs.gov,* if—

(i) In the subcontractor's preceding fiscal year, the subcontractor received—

(A) 80 percent or more of its annual gross revenues from Federal contracts (and subcontracts), loans, grants (and subgrants), cooperative agreements, and other forms of Federal financial assistance; and

(B) $25,000,000 or more in annual gross revenues from Federal contracts (and subcontracts), loans, grants (and subgrants), cooperative agreements, and other forms of Federal financial assistance; and

(ii) The public does not have access to information about the compensation of the executives through periodic reports filed under section 13(a) or 15(d) of the Securities Exchange Act of 1934 (15 U.S.C. 78m(a), 78o(d)) or section 6104 of the Internal Revenue Code of 1986. (To determine if the public has access to the compensation information, see the U.S. Security and Exchange Commission total compensation filings at *http://www.sec.gov/answers/execomp.htm.*)

(e) The Contractor shall not split or break down first-tier subcontract awards to a value less than $25,000 to avoid the reporting requirements in paragraph (d).

(f) The Contractor is required to report information on a first-tier subcontract covered by paragraph (d) when the subcontract is awarded. Continued reporting on the same subcontract is not required unless one of the reported data elements changes during the performance of the subcontract. The Contractor is not required to make further reports after the first-tier subcontract expires.

(g)(1) If the Contractor in the previous tax year had gross income, from all sources, under $300,000, the Contractor is exempt from the requirement to report subcontractor awards.

(2) If a subcontractor in the previous tax year had gross income from all sources under $300,000, the Contractor does not need to report awards for that subcontractor.

(h) The FSRS database at *http://www.fsrs.gov* will be prepopulated with some information from CCR and FPDS databases. If FPDS information is incorrect, the contractor should notify the contracting officer. If the CCR database information is incorrect, the contractor is responsible for correcting this information.

(End of clause)

■ 9. Amend section 52.212–5 by revising the date of the clause, and paragraph (b)(4) to read as follows:

52.212–5 Contract Terms and Conditions Required To Implement Statutes or Executive Orders—Commercial Items.

* * * * *

Contract Terms and Conditions Required To Implement Statutes or Executive Orders—Commercial Items. (Aug 2012)

* * * * *

(b) * * *

(4) 52.204–10, Reporting Executive Compensation and First-Tier Subcontract Awards (Aug 2012) (Pub. L. 109–282) (31 U.S.C. 6101 note).

* * * * *

■ 10. Amend section 52.213–4 by—

■ a. Revise the date of the clause;

■ b. Remove paragraph (a)(2)(i);

■ c. Redesignate paragraphs (a)(2)(ii) through paragraphs (a)(2)(viii) as paragraphs (a)(2)(i) through paragraphs (a)(2)(vii), respectively;

■ d. Redesignate paragraphs (b)(1)(i) through paragraphs (b)(1)(xii) as paragraphs (b)(1)(ii) through paragraphs (b)(1)(xiii), respectively; and

■ e. Add a new paragraph (b)(1)(i).

The revised and added text reads as follows:

52.213–4 Terms and Conditions—Simplified Acquisitions (Other Than Commercial Items).

* * * * *

Terms and Conditions—Simplified Acquisitions (Other Than Commercial Items) (Aug 2012)

* * * * *

(b) * * *

(1) * * *

(i) 52.204–10, Reporting Executive Compensation and First-Tier Subcontract Awards (Aug 2012) (Pub. L. 109–282) (31 U.S.C. 6101 note) (Applies to contracts valued at $25,000 or more).

* * * * *

[FR Doc. 2012–17724 Filed 7–25–12; 8:45 am]

BILLING CODE 6820–EP–P

DEPARTMENT OF DEFENSE

GENERAL SERVICES ADMINISTRATION

NATIONAL AERONAUTICS AND SPACE ADMINISTRATION

48 CFR Parts 16, 32, and 52

[FAC 2005–60; FAR Case 2011–003; Item II; Docket 2011–0003, Sequence 1]

RIN 9000–AM01

Federal Acquisition Regulation; Payments Under Time-and-Materials and Labor-Hour Contracts

AGENCY: Department of Defense (DoD), General Services Administration (GSA), and National Aeronautics and Space Administration (NASA).

ACTION: Final rule.

SUMMARY: DoD, GSA, and NASA are issuing a final rule amending the Federal Acquisition Regulation (FAR) to make necessary revisions to accommodate the authorization to use time-and-materials and labor-hour contract payment requirements.

DATES: *Effective Date:* August 27, 2012.

FOR FURTHER INFORMATION CONTACT: Mr. Edward N. Chambers, Procurement Analyst, at 202–501–3221 for clarification of content. For information pertaining to status or publication schedules, contact the Regulatory Secretariat at 202–501–4755. Please cite FAC 2005–60, FAR Case 2011–003.

SUPPLEMENTARY INFORMATION:

I. Background

DoD, GSA, and NASA published a proposed rule in the **Federal Register** at 76 FR 44884 on July 27, 2011, to make the necessary regulatory revisions to enable the use of the appropriate payment provisions for time-and-materials and labor-hour contracts. These revisions supplement the following previously issued revisions to the FAR addressing time-and-materials contracts:

(1) FAR Case 2003–027, Additional Commercial Contract Types (71 FR 74667 dated December 12, 2006), implemented section 1432 of the National Defense Authorization Act for Fiscal Year 2004 (Pub. L. 108–136). Title XIV of the Act, referred to as the Services Acquisition Reform Act of 2003 (SARA), amended section 8002(d) of the Federal Acquisition Streamlining Act of 1994 (FASA) (Pub. L. 103–355, 41 U.S.C. 3307) to expressly authorize the use of time-and-materials and labor-hour contracts for commercial services under specified conditions.

(2) FAR Case 2004–015, Payments Under Time-and-Materials and Labor-Hour Contracts (71 FR 74656 dated December 12, 2006), revised and clarified policies related to the award and administration of noncommercial time-and-materials and labor-hour contracts and the policies regarding payments made under those contracts.

II. Discussion and Analysis of the Public Comments

The Civilian Agency Acquisition Council and the Defense Acquisition Regulations Council (the Councils) reviewed the comments in the development of the final rule. A discussion of the comments and the changes made to the rule as a result of those comments are provided as follows:

A. Summary of Significant Changes

The proposed rule sought to harmonize the provisions for invoicing and submission of the final invoice between FAR clauses 52.216–7, Allowable Cost and Payment, and 52.232–7, Payments under Time-and Materials and Labor-Hour Contracts, when a time-and-materials contract is being used. Currently, under a time-and-materials contract, FAR clause 52.232–7 provides for monthly invoicing and submission of the completion voucher no later than one year from the date of work completion. These provisions are in conflict with the corresponding provisions of FAR clause 52.216–7, which is invoked under a time-and-materials contract. FAR clause 52.216–7 provides for invoicing on a bi-weekly basis for large businesses, and more frequent invoicing for small businesses, and the submission of the completion voucher no later than 120 days after completion of work.

Consequently, the final rule amends the basic FAR clause 52.232–7 to reflect the provisions for invoicing and submission of the completion voucher at FAR clause 52.216–7. This final rule deletes Alternate I along with its prescription for use at FAR 32.111(a)(7)(i).

Alternate I of FAR 52.232–7 provided for the addition of paragraph (j) in labor-hour contracts which deleted the terms of the basic clause governing the reimbursement of furnished materials. Alternate I, paragraph (j), is superfluous and is deleted since the terms of the basic clause governing the reimbursement of furnished materials are in effect self-deleting.

B. Analysis of Public Comments

Three respondents submitted comments in response to the proposed rule. A discussion of these comments and the changes made to the rule as a result of these comments are provided as follows:

1. Time-and-Materials Contracts and Ceiling Prices

Comment: A respondent recommended changing the way time-and-materials contracts are managed to align more closely with how the Canadian procurement regulations manage time-and-materials contracts. Specifically, U.S. Government regulations should include language requiring a ceiling price on time-and-materials contracts within which the contractor must complete the prescribed work.

Response: This comment is outside the scope of this case, which was limited to simply clarifying the existing prescriptions and clauses relating to appropriate payment provisions for use in time-and-materials and labor-hour contracts. FAR 16.601 delineates that time and materials contracts must include a ceiling price that the contractor exceeds at its own risk.

2. Inclusion of FAR 52.246–6(f) Provision

Comment: A respondent stated that the proposed rule should include consideration of the provision found at FAR 52.246–6(f), Inspection—Time-and-Material and Labor-Hour, paragraph (f) (requirement to replace or correct services or materials that failed to meet contract requirements).

Response: This comment is outside the scope of this case, which was limited to simply clarifying the existing prescriptions and clauses relating to appropriate payment provisions for use in time-and-materials and labor-hour contracts. Inclusion of FAR provision 52.246–6(f) language into the payment provisions at FAR 52.212–4, 52.216–7, or 52.232–7 is unnecessary.

3. Consistency Between Revised Clauses

Comment: A respondent cited several instances where language was inconsistent between the clauses under the proposed rule. Specifically, the proposed rule aligned the frequency of invoicing and the period for submission of the completion voucher provisions for time-and-materials contracts at FAR 52.232–7 with that currently set forth in the ''Allowable Cost and Payment'' clause at FAR 52.216–7. However, for labor-hour contracts, under Alternate I to 52.232–7, the proposed rule left the invoicing and period for submission of the completion voucher provisions, which were different from the requirements set forth in FAR 52.216–7 and 52.232–7, unchanged. The respondent questioned this inconsistency regarding these provisions.

Response: The invoicing and submission of the completion voucher provisions in time-and-materials contracts and labor-hour contracts should align. Consequently, the final rule does not include the proposed rule language regarding invoicing and the period for submission of completion vouchers for labor-hour contracts in Alternate I to FAR clause 52.232–7.

III. Executive Orders 12866 and 13563

Executive Orders (E.O.s) 12866 and 13563 direct agencies to assess all costs and benefits of available regulatory alternatives and, if regulation is necessary, to select regulatory approaches that maximize net benefits (including potential economic, environmental, public health and safety effects, distributive impacts, and equity). E.O. 13563 emphasizes the importance of quantifying both costs and benefits, of reducing costs, of harmonizing rules, and of promoting flexibility. This is not a significant regulatory action and, therefore, was not subject to review under Section 6(b) of E.O. 12866, Regulatory Planning and Review, dated September 30, 1993. This rule is not a major rule under 5 U.S.C. 804.

IV. Regulatory Flexibility Act

The Department of Defense, the General Services Administration, and the National Aeronautics and Space Administration certify that this final rule will not have a significant economic impact on a substantial number of small entities within the meaning of the Regulatory Flexibility Act, 5 U.S.C. 601, *et seq.,* because it merely clarifies the existing prescriptions and clauses relating to services contracts. No comments from

small entities were submitted in response to the Regulatory Flexibility Act request under the proposed rule.

V. Paperwork Reduction Act

The final rule does not contain any information collection requirements that require the approval of the Office of Management and Budget under the Paperwork Reduction Act (44 U.S.C. chapter 35).

List of Subjects in 48 CFR Parts 16, 32, and 52

Government procurement.

Dated: July 16, 2012.

Laura Auletta,

Director, Office of Governmentwide Acquisition Policy, Office of Governmentwide Policy.

Therefore, DoD, GSA, and NASA amend 48 CFR parts 16, 32, and 52 as follows:

■ 1. The authority citation for 48 CFR parts 16, 32, and 52 is revised to read as follows:

Authority: 40 U.S.C. 121(c); 10 U.S.C. chapter 137; and 51 U.S.C. 20113.

PART 16—TYPES OF CONTRACTS

■ 2. Amend section 16.307 by revising paragraph (a)(1); and adding paragraphs (a)(3) through (5) to read as follows:

§ 16.307 Contract clauses.

(a)(1) The contracting officer shall insert the clause at 52.216–7, Allowable Cost and Payment, in solicitations and contracts when a cost-reimbursement contract or a time-and-materials contract (other than a contract for a commercial item) is contemplated. If the contract is a time-and-materials contract, the clause at 52.216–7 applies in conjunction with the clause at 52.232–7, but only to the portion of the contract that provides for reimbursement of materials (as defined in the clause at 52.232–7) at actual cost. Further, the clause at 52.216–7 does not apply to labor-hour contracts.

* * * * *

(3) If the contract is with an educational institution, the contracting officer shall use the clause at 52.216–7 with its Alternate II.

(4) If the contract is with a State or local government, the contracting officer shall use the clause at 52.216–7 with its Alternate III.

(5) If the contract is with a nonprofit organization other than an educational institution, a State or local government, or a nonprofit organization exempted under OMB Circular No. A–122, the contracting officer shall use the clause at 52.216–7 with its Alternate IV.

* * * * *

PART 32—CONTRACT FINANCING

■ 3. Amend section 32.111 by revising paragraph (a)(7) to read as follows:

§ 32.111 Contract clauses for non-commercial purchases.

(a) * * *

(7) The clause at 52.232–7, Payments under Time-and-Materials and Labor-Hour Contracts, in solicitations and contracts when a time-and-materials or labor-hour contract is contemplated. If the contracting officer determines that it is necessary to withhold payment to protect the Government's interests, paragraph (a)(7) of the clause permits the contracting officer to unilaterally issue a modification requiring the contractor to withhold 5 percent of amounts due, up to a maximum of $50,000 under the contract. The contracting officer shall ensure that the modification specifies the percentage and total amount of the withheld payment. Normally, there should be no need to withhold payment for a contractor with a record of timely submittal of the release discharging the Government from all liabilities, obligations, and claims, as required by paragraph (g) of the clause.

* * * * *

PART 52—SOLICITATION PROVISIONS AND CONTRACT CLAUSES

■ 4. Amend Alternate I of section 52.212–4 by—

■ a. Revising the date of Alternate I and the introductory text;

■ b. Revising paragraphs of (i)(1) introductory text and (i)(1)(ii)(A); and

■ c. Adding paragraph (m).

The revised and added text reads as follows:

52.212–4 Contract Terms and Conditions—Commercial Items.

* * * * *

Alternate I (AUG 2012). When a time-and-materials or labor-hour contract is contemplated, substitute the following paragraphs (a), (e), (i), (l), and (m) for those in the basic clause.

* * * * *

(i) *Payments.* (1) *Work performed.* The Government will pay the Contractor as follows upon the submission of commercial invoices approved by the Contracting Officer:

* * * * *

(ii) * * *

(A) If the Contractor furnishes materials that meet the definition of a commercial item at 2.101, the price to be paid for such materials shall not exceed the Contractor's established catalog or market price, adjusted to reflect the—

* * * * *

(m) *Termination for cause.* The Government may terminate this contract, or any part hereof, for cause in the event of any default by the Contractor, or if the Contractor fails to comply with any contract terms and conditions, or fails to provide the Government, upon written request, with adequate assurances of future performance. Subject to the terms of this contract, the Contractor shall be paid an amount computed under paragraph (i) Payments of this clause, but the ''hourly rate'' for labor hours expended in furnishing work not delivered to or accepted by the Government shall be reduced to exclude that portion of the rate attributable to profit. Unless otherwise specified in paragraph (a)(4) of this clause, the portion of the ''hourly rate'' attributable to profit shall be 10 percent. In the event of termination for cause, the Contractor shall be liable to the Government for any and all rights and remedies provided by law. If it is determined that the Government improperly terminated this contract for default, such termination shall be deemed a termination for convenience.

■ 5. Amend section 52.216–7 by adding Alternates II through Alternates IV to read as follows:

§ 52.216–7 Allowable Cost and Payment.

* * * * *

Alternate II (AUG 2012). As prescribed in 16.307(a)(3), substitute the following paragraph (a)(1) for paragraph (a)(1) of the basic clause:

(a)(1) The Government will make payments to the Contractor when requested as work progresses, but not more often than once every two weeks, in amounts determined to be allowable by the Contracting Officer in accordance with FAR subpart 31.3 in effect on the date of this contract and the terms of this contract. The Contractor may submit to an authorized representative of the Contracting Officer, in such form and reasonable detail as the representative may require, an invoice or voucher supported by a statement of the claimed allowable cost for performing this contract.

Alternate III (AUG 2012). As prescribed in 16.307(a)(4), substitute the following paragraph (a)(1) for paragraph (a)(1) of the basic clause:

(a)(1) The Government will make payments to the Contractor when requested as work progresses, but not more often than once every two weeks, in amounts determined to be allowable by the Contracting Officer in accordance with FAR subpart 31.6 in effect on the date of this contract and the terms of this contract. The Contractor may submit to an authorized representative of the Contracting Officer, in such form and reasonable detail as the representative may require, an invoice or voucher supported by a statement of the claimed allowable cost for performing this contract.

Alternate IV (AUG 2012). As prescribed in 16.307(a)(5), substitute the following paragraph (a)(1) for paragraph (a)(1) of the basic clause:

(a)(1) The Government will make payments to the Contractor when requested as work progresses, but not more often than once every two weeks, in amounts determined to be allowable by the Contracting Officer in

accordance with FAR subpart 31.7 in effect on the date of this contract and the terms of this contract. The Contractor may submit to an authorized representative of the Contracting Officer, in such form and reasonable detail as the representative may require, an invoice or voucher supported by a statement of the claimed allowable cost for performing this contract.

■ 6. Amend section 52.232–7 by—
■ a. Revising the date of the clause;
■ b. Revising the introductory text of paragraph (a)(5);
■ c. Removing from the last sentence of paragraph (f) ''1 year'' and adding ''120 days'' in its place; and
■ d. Removing ''Alternate I''.

The revised text reads as follows:

§ 52.232–7 Payments under Time-and-Materials and Labor-Hour Contracts.

* * * * *

Payments Under Time-and-Materials and Labor-Hour Contracts (AUG 2012)

* * * * *

(a) * * *

(5) Vouchers may be submitted not more than once every two weeks, to the Contracting Officer or authorized representative. A small business concern may receive more frequent payments than every two weeks. The Contractor shall substantiate vouchers (including any subcontractor hours reimbursed at the hourly rate in the schedule) by evidence of actual payment and by—

* * * * *

[FR Doc. 2012–17727 Filed 7–25–12; 8:45 am]

BILLING CODE 6820–EP–P

DEPARTMENT OF DEFENSE

GENERAL SERVICES ADMINISTRATION

NATIONAL AERONAUTICS AND SPACE ADMINISTRATION

48 CFR Part 16

[FAC 2005–60; FAR Case 2012–007; Item III; Docket 2012–0007, Sequence 1]

RIN 9000–AM26

Federal Acquisition Regulation; Extension of Sunset Date for Protests of Task and Delivery Orders

AGENCIES: Department of Defense (DoD), General Services Administration (GSA), and National Aeronautics and Space Administration (NASA).

ACTION: Interim rule.

SUMMARY: DoD, GSA, and NASA are issuing an interim rule amending the Federal Acquisition Regulation (FAR) to implement sections of the Ike Skelton National Defense Authorization Act for Fiscal Year 2011, and the National Defense Authorization Act for Fiscal Year 2012. These statutes extend the sunset date for protests against the award of task or delivery orders from May 27, 2011, to September 30, 2016.

DATES: *Effective date:* July 26, 2012.

Comment date: Interested parties should submit written comments to the Regulatory Secretariat on or before September 24, 2012 to be considered in the formation of a final rule.

ADDRESSES: Submit comments identified by FAC 2005–60, FAR Case 2012–007, by any of the following methods:

- *Regulations.gov: http://www.regulations.gov.* Submit comments via the Federal eRulemaking portal by searching for ''FAR Case 2012–007''. Select the link ''Submit a Comment'' that corresponds with ''FAR Case 2012–007.'' Follow the instructions provided at the ''Submit a Comment'' screen. Please include your name, company name (if any), and ''FAR Case 2012–007'' on your attached document.
- *Fax:* 202–501–4067.
- *Mail:* General Services Administration, Regulatory Secretariat (MVCB), ATTN: Hada Flowers, 1275 First Street NE., 7th Floor, Washington, DC 20417.

Instructions: Please submit comments only and cite FAC 2005–60, FAR Case 2012–007, in all correspondence related to this case. All comments received will be posted without change to *http://www.regulations.gov,* including any personal and/or business confidential information provided.

FOR FURTHER INFORMATION CONTACT: Ms. Deborah Lague, Procurement Analyst, at 202–694–8149 for clarification of content. For information pertaining to status or publication schedules, contact the Regulatory Secretariat at 202–501–4755. Please cite FAC 2005–60, FAR Case 2012–012.

SUPPLEMENTARY INFORMATION:

I. Background

DoD, GSA, and NASA published an interim rule in the **Federal Register** at 76 FR 39238 on July 5, 2011, entitled ''Extension of Sunset Date for Protests of Task and Delivery Orders'' (FAC 2005–53, FAR Case 2011–015). The rule implemented section 825 of the Ike Skelton National Defense Authorization Act (NDAA) for Fiscal Year (FY) 2011 (Pub. L. 111–383, enacted January 7, 2011). The rule extended the sunset date for protests of task and delivery orders valued in excess of $10 million for Title 10 agencies, namely DoD, NASA, and the Coast Guard. The rule did not extend the sunset date for Title 41 agencies as there was no comparable change to Title 41 at that time.

Subsequent to the publication of the interim rule under FAR Case 2011–015, section 813 of the NDAA for FY 2012 (Pub. L. 112–81, enacted December 31, 2011) made comparable changes to Title 41 to extend the sunset date for protests against the award of task and delivery orders from May 27, 2011, to September 30, 2016. In order to accomplish the statutory changes for both Title 10 and Title 41, FAR Case 2011–015 is not being issued as a final rule and is instead being renumbered and incorporated into this second interim rule, FAR Case 2012–007.

II. Discussion and Analysis

A. Summary of Significant Changes

FAR 16.505(a)(10)(ii) is amended to extend, for Title 41 agencies, the authority to protest the placement of task and delivery orders valued in excess of $10 million from May 27, 2011, to September 30, 2016.

B. Analysis of Public Comment

One public comment was received for FAR Case 2011–015. The public comment and response are provided as follows:

Comment on FAR Case 2011–015: The respondent indicated that the sunset date for protest of orders should extend to Title 41 agencies, not just Title 10 agencies.

Response: The rule has been changed to incorporate and implement the later-enacted section 813 of the NDAA for FY 2012 to extend the sunset date for the protest of task and delivery orders from May 27, 2011, to September 30, 2016, for Title 41 agencies.

III. Executive Orders 12866 and 13563

Executive Orders (E.O.s) 12866 and 13563 direct agencies to assess all costs and benefits of available regulatory alternatives and, if regulation is necessary, to select regulatory approaches that maximize net benefits (including potential economic, environmental, public health and safety effects, distributive impacts, and equity). E.O. 13563 emphasizes the importance of quantifying both costs and benefits, of reducing costs, of harmonizing rules, and of promoting flexibility. This is not a significant regulatory action and, therefore, was not subject to review under Section 6(b) of E.O. 12866, Regulatory Planning and Review, dated September 30, 1993. This rule is not a major rule under 5 U.S.C. 804.

IV. Regulatory Flexibility Act

The change may have a significant economic impact on a substantial number of small entities within the meaning of the Regulatory Flexibility Act 5 U.S.C. 601, *et seq.* The Initial Regulatory Flexibility Analysis (IRFA) is summarized as follows:

The objective of this rule is to implement section 825 of the NDAA for FY 2011, which extended the sunset date for Title 10 agencies and section 813 of the NDAA for FY 2012, which extended the sunset date for Title 41 agencies.

The authority to file protests against the award of task or delivery orders is relatively new, and there is little data available, as such protests may be filed with the agency or Government Accountability Office (GAO). GAO has exclusive jurisdiction of a protest of an order valued in excess of $10 million. Data on agency-level protests is not compiled outside the agency concerned; therefore estimates are based on the total number of protests filed at the GAO in FYs 2009, 2010 and 2011. The data was extracted from GAO's report to the Congress for those fiscal years.

Offerors can protest to the agency or to the GAO. Assuming that one-half of all protests are filed with the GAO and the other half are filed with the agency, then the average number of protests filed per fiscal year would be 6,700 (see below):

Fiscal Year 2009 protests to GAO	2,000
Fiscal Year 2010 protests to GAO	2,300
Fiscal Year 2011 protests to GAO	2,400
	6,700
Divided by	3
Average annual GAO protests	2,233
Multiplied by	2
Estimated total number of protests	4,467

Protests may be filed against the award of contracts as well as certain task or delivery orders. There are few prohibitions on the grounds for protests against the award of a contract. However, protests against the award of a task or delivery order are limited to (a) a protest on the grounds that the order increases the scope, period, or maximum value of the contract; or (b) a protest of an order valued in excess of $10 million. Therefore, it is reasonable to assume that less than 50 percent of the total number of protests filed is against the award of a task or delivery order. A generous estimate is approximately one-fourth, or 1,117. Likewise, only a percentage of the protests against the award of a task or delivery order are made by small businesses. Even if we assume that percentage to be one-half, then the number of protests filed by small businesses against the award of a task or delivery order is estimated to be 559.

# protests of task/delivery orders by small businesses	559
% of protests sustained	× .03
# of task/delivery orders protests sustained	17

The number 17 represents the number of small business task or delivery order protests sustained in a fiscal year. This number is representative of protests against awards by all Government agencies.

There is no requirement for small entities to submit any information under this provision. Therefore, no professional skills are necessary on the part of small entities for compliance, and the cost to small entities associated with this provision is $0.

The Regulatory Secretariat will be submitting a copy of the Initial Regulatory Flexibility Analysis (IRFA) to the Chief Counsel for Advocacy of the Small Business Administration. A copy of the IRFA may be obtained from the Regulatory Secretariat. DoD, GSA, and NASA invite comments from small business concerns and other interested parties on the expected impact of this rule on small entities.

DoD, GSA, and NASA will also consider comments from small entities concerning the existing regulations in subparts affected by this rule in accordance with 5 U.S.C. 610. Interested parties must submit such comments separately and should cite 5 U.S.C. 610 (FAC 2005–60, FAR Case 2012–007) in correspondence.

V. Paperwork Reduction Act

The interim rule does not contain any information collection requirements that require the approval of the Office of Management and Budget under the Paperwork Reduction Act (44 U.S.C. chapter 35).

VI. Determination to Issue an Interim Rule

A determination has been made under the authority of the Secretary of Defense (DoD), the Administrator of General Services (GSA), and the Administrator of the National Aeronautics and Space Administration (NASA) that urgent and compelling reasons exist to promulgate this interim rule without prior opportunity for public comment. This action is necessary because statutory authority for Title 41 offerors to file certain bid protests lapsed May 27, 2011, but was reinstated in the National Defense Authorization Act for Fiscal Year 2012, effective December 31, 2011. Similar authority for Title 10 offerors was extended by a January 7, 2011, statute, and has already been implemented in the FAR. If this rule is not published on an interim basis, offerors could be misinformed about their legal right to file certain protests. Disappointed Title 41 offerors would be unclear on whether to file bid protests of civilian agency task and delivery order awards at either the GAO or the Court of Federal Claims. This interim rule clarifies that GAO has exclusive jurisdiction of a protest of an order valued in excess of $10 million. However, pursuant to 41 U.S.C. 1707 and FAR 1.501–3(b), DoD, GSA, and NASA will consider public comments received in response to this interim rule in the formation of the final rule.

List of Subjects in 48 CFR Part 16

Government procurement.

Dated: July 16, 2012.

Laura Auletta,

Director, Office of Governmentwide Acquisition Policy, Office of Acquisition Policy, Office of Governmentwide Policy.

Therefore, DoD, GSA, and NASA amend 48 CFR part 16 as follows:

PART 16—TYPES OF CONTRACT

■ 1. The authority citation for 48 CFR part 16 is revised to read as follows:

Authority: 40 U.S.C. 121(c); 10 U.S.C. chapter 137; and 51 U.S.C. 20113.

■ 2. Amend section 16.505 by removing from paragraph (a)(10)(i) introductory text ''under Subpart 33.1'' and adding ''under subpart 33.1'' in its place; and revising paragraph (a)(10)(ii) to read as follows:

16.505 Ordering.

(a) * * *

(10) * * *

(ii) The authority to protest the placement of an order under (a)(10)(i)(B) of this section expires on September 30, 2016 (10 U.S.C. 2304a(d), 10 U.S.C. 2304c(e), 41 U.S.C. 4103(d), and 41 U.S.C. 4106(f)).

* * * * *

[FR Doc. 2012–17730 Filed 7–25–12; 8:45 am]

BILLING CODE 6820–EP–P

DEPARTMENT OF DEFENSE

GENERAL SERVICES ADMINISTRATION

NATIONAL AERONAUTICS AND SPACE ADMINISTRATION

48 CFR Part 29

[FAC 2005–60; FAR Case 2012–019; Item IV; Docket 2012–0019; Sequence 1]

RIN 9000–AM29

Federal Acquisition Regulations; DARPA-New Mexico Tax Agreement

AGENCIES: Department of Defense (DoD), General Services Administration (GSA), and National Aeronautics and Space Administration (NASA).

ACTION: Final rule.

SUMMARY: DoD, GSA, and NASA are issuing a final rule amending the Federal Acquisition Regulation (FAR) to add the United States Defense Advanced Research Projects Agency (DARPA) to the list of agencies that have entered into separate tax agreements with the State of New Mexico (NM). The DARPA–NM tax agreement eliminates the double taxation of Government cost-reimbursement contracts when DARPA contractors and their subcontractors purchase tangible personal property to be used in performing services in whole or in part in the State of New Mexico, and for which title to such property will pass to the United States upon delivery of the property to the contractor and its subcontractors by the vendor.

DATES: *Effective date:* August 27, 2012.

FOR FURTHER INFORMATION CONTACT: Mr. Edward N. Chambers, Procurement Analyst, at 202–501–3221 for clarification of content. For information pertaining to status or publication schedules, contact the Regulatory Secretariat at 202–501–4755. Please cite FAC 2005–60, FAR Case 2012–019.

SUPPLEMENTARY INFORMATION:

I. Background

On August 18, 2011, DARPA and the Taxation and Revenue Department of the State of New Mexico entered into the DARPA–NM tax agreement to eliminate the double taxation of Government cost-reimbursement contracts when DARPA contractors and their subcontractors purchase tangible personal property to be used in performing services in whole or in part in the State of New Mexico and for which title to such property will pass to the United States upon delivery of the property to the contractor and its subcontractors by the vendor.

II. Discussion

The FAR is amended to add the United States Defense Advanced Research Projects Agency to the list of participating agencies under FAR 29.401–4(c). DARPA joins the list of other agencies with existing tax agreements with the State of New Mexico.

III. Executive Orders 12866 and 13563

Executive Orders (E.O.s) 12866 and 13563 direct agencies to assess all costs and benefits of available regulatory alternatives and, if regulation is necessary, to select regulatory approaches that maximize net benefits (including potential economic, environmental, public health and safety effects, distributive impacts, and equity). E.O. 13563 emphasizes the importance of quantifying both costs and benefits, of reducing costs, of harmonizing rules, and of promoting flexibility. This is not a significant regulatory action and, therefore, was not subject to review under section 6(b) of E.O. 12866, Regulatory Planning and Review, dated September 30, 1993. This rule is not a major rule under 5 U.S.C. 804.

IV. Publication of This Final Rule for Public Comment Is Not Required by Statute

''Publication of proposed regulations'', 41 U.S.C. 1707, is the statute which applies to the publication of the Federal Acquisition Regulation. Paragraph (a)(1) of the statute requires that a procurement policy, regulation, procedure or form (including an amendment or modification thereof) must be published for public comment if it relates to the expenditure of appropriated funds, and has either a significant effect beyond the internal operating procedures of the agency issuing the policy, regulation, procedure or form, or has a significant cost or administrative impact on contractors or offerors. This final rule is not required to be published for public comment, because it recognizes actions taken by DARPA that do not have a significant effect on contractors or offerors.

V. Regulatory Flexibility Act

The Regulatory Flexibility Act does not apply to this rule because this final rule does not constitute a significant FAR revision, and 41 U.S.C. 1707 does not require publication for public comment.

VI. Paperwork Reduction Act

The rule does not contain any information collection requirements that require the approval of the Office of Management and Budget under the Paperwork Reduction Act (44 U.S.C. chapter 35).

List of Subjects in 48 CFR Part 29

Government procurement.

Dated: July 16, 2012.

Laura Auletta,

Director, Office of Governmentwide Acquisition Policy, Office of Acquisition Policy.

Therefore, DoD, GSA, and NASA amend 48 CFR part 29 as follows:

PART 29—TAXES

■ 1. The authority citation for 48 CFR part 29 is revised to read as follows:

Authority: 40 U.S.C. 121(c); 10 U.S.C. chapter 137; and 51 U.S.C. 20113.

29.401–4 [Amended]

■ 2. Amend section 29.401–4 in paragraph (c)(1) by adding to the listing, in alphabetical order, ''United States Defense Advanced Research Projects Agency;''.

[FR Doc. 2012–17732 Filed 7–25–12; 8:45 am]

BILLING CODE 6820–EP–P

DEPARTMENT OF DEFENSE

GENERAL SERVICES ADMINISTRATION

NATIONAL AERONAUTICS AND SPACE ADMINISTRATION

48 CFR Part 53

[FAC 2005–60; FAR Case 2011–022; Item V; Docket 2011–0093, Sequence IV]

RIN 9000–AM15

Federal Acquisition Regulation: Clarification of Standards for Computer Generation of Forms

AGENCIES: Department of Defense (DoD), General Services Administration (GSA), and National Aeronautics and Space Administration (NASA).

ACTION: Final rule.

SUMMARY: DoD, GSA, and NASA are issuing a final rule amending the Federal Acquisition Regulation (FAR) to remove any reference to Federal Information Processing Standard (FIPS) 161 and codify requirements for standards already in use.

DATES: *Effective Date:* August 27, 2012.

FOR FURTHER INFORMATION CONTACT: Ms. Deborah Lague, Procurement Analyst, at 202–694–8149 for clarification of content. For information pertaining to status or publication schedules, contact the Regulatory Secretariat at 202–501–4755. Please cite FAC 2005–60, FAR Case 2011–022.

SUPPLEMENTARY INFORMATION:

I. Background

DoD, GSA, and NASA published a proposed rule in the **Federal Register** at 76 FR 79609 on December 22, 2011, to implement the removal of FIPS 161. FIPS 161 is being removed based on the notice posted in the **Federal Register** at 73 FR 51276 on September 2, 2008, by the Department of Commerce. This FIPS requirement was withdrawn by the Secretary of Commerce because it was obsolete and had not been updated to adopt current voluntary industry standards, Federal specifications, Federal data standards, or current good practices for information security. The withdrawal of this standard created a

gap in the FAR. This final rule closes that gap by clarifying the use of American National Standards Institute (ANSI) X12 as the valid standard to use for computer-generated forms. FAR 53.105 is being amended; it will continue allowing agencies and the public to generate standard and optional forms on their computers.

II. Discussion and Analysis

There were no public comments received in response to the proposed rule; therefore, this rule is published as a final rule.

III. Executive Orders 12866 and 13563

Executive Orders (E.O.s) 12866 and 13563 direct agencies to assess all costs and benefits of available regulatory alternatives and, if regulation is necessary, to select regulatory approaches that maximize net benefits (including potential economic, environmental, public health and safety effects, distributive impacts, and equity). E.O. 13563 emphasizes the importance of quantifying both costs and benefits, of reducing costs, of harmonizing rules, and of promoting flexibility. This is not a significant regulatory action and, therefore, was not subject to review under Section 6(b) of E.O. 12866, Regulatory Planning and Review, dated September 30, 1993. This rule is not a major rule under 5 U.S.C. 804.

IV. Regulatory Flexibility Act

The Department of Defense, General Services Administration, and National Aeronautics and Space Administration certify that this final rule will not have a significant economic impact on a substantial number of small entities within the meaning of the Regulatory Flexibility Act, 5 U.S.C. 601, *et seq.,* because it is removing FIPS 161 which is obsolete or has not been updated to adopt current voluntary industry standards, Federal specifications, Federal data standards, or current good practices for information security. This is a technical change acknowledging the removal by the Department of Commerce of FIPS 161 and replacement with the ANSI X12 set of standards. ANSI X12 standards were already a part of the FIPS 161 standard and have been updated with current voluntary industry standards already in use. Therefore, there is no impact to the Government or contractors in establishing ANSI X12 as the new standard. Small businesses will continue to be able to generate forms by computer.

V. Paperwork Reduction Act

The rule does not contain any information collection requirements that require the approval of the Office of Management and Budget under the Paperwork Reduction Act (44 U.S.C. chapter 35).

List of Subjects in 48 CFR Part 53

Government procurement.

Dated: July 16, 2012.

Laura Auletta,

Director, Office of Governmentwide Acquisition Policy, Office of Acquisition Policy, Office of Governmentwide Policy.

Therefore, DoD, GSA, and NASA amend 48 CFR part 53 as follows:

PART 53—FORMS

■ 1. The authority citation for 48 CFR part 53 is revised to read as follows:

Authority: 40 U.S.C. 121(c); 10 U.S.C. chapter 137; and 51 U.S.C. 20113.

■ 2. Revise section 53.105 to read as follows:

53.105 Computer generation.

(a) The forms prescribed by this part may be computer generated—without exception approval (see 53.103), provided—

(1) There is no change to the name, content, or sequence of the data elements, and the form carries the Standard or Optional Form number and edition date (see 53.111); or

(2) The form is in an electronic format covered by the American National Standards Institute (ANSI) X12 Standards published by the Accredited Standards Committee X12 on Electronic Data Interchange or a format that can be translated into one of those standards.

(b) The standards listed in paragraph (a)(2) of this section may also be used for submission of data set forth in other parts for which specific forms have not been prescribed.

[FR Doc. 2012–17738 Filed 7–25–12; 8:45 am]

BILLING CODE 6820–EP–P

DEPARTMENT OF DEFENSE

GENERAL SERVICES ADMINISTRATION

NATIONAL AERONAUTICS AND SPACE ADMINISTRATION

48 CFR Parts 1, 16, 22, and 52

[FAC 2005–60; Item VI; Docket 2012–0079; Sequence 3]

Federal Acquisition Regulation; Technical Amendments

AGENCIES: Department of Defense (DoD), General Services Administration (GSA), and National Aeronautics and Space Administration (NASA).

ACTION: Final rule.

SUMMARY: This document makes amendments to the Federal Acquisition Regulation (FAR) in order to make editorial changes.

DATES: *Effective Date:* July 26, 2012.

FOR FURTHER INFORMATION CONTACT: The Regulatory Secretariat, 1275 First Street NE., 7th Floor, Washington, DC 20417, 202–501–4755, for information pertaining to status or publication schedules. Please cite FAC 2005–60, Technical Amendments.

SUPPLEMENTARY INFORMATION: In order to update certain elements in 48 CFR parts 1, 16, 22, and 52, this document makes editorial changes to the FAR.

List of Subjects in 48 CFR Parts 1, 16, 22, and 52

Government procurement.

Dated: July 16, 2012.

Laura Auletta,

Director, Office of Governmentwide Acquisition Policy, Office of Acquisition Policy, Office of Governmentwide Policy.

Therefore, DoD, GSA, and NASA amend 48 CFR parts 1, 16, 22, and 52 as set forth below:

■ 1. The authority citation for 48 CFR parts 1, 16, 22, and 52 is revised to read as follows:

Authority: 40 U.S.C. 121(c); 10 U.S.C. chapter 137; and 51 U.S.C. 20113.

PART 1—FEDERAL ACQUISITION REGULATIONS SYSTEM

1.105–2 [Amended]

■ 2. Amend section 1.105–2 by revising paragraphs (c)(3)(i) and (ii) to read as follows:

1.105–2 Arrangement of regulations.

* * * * *

(c) * * *

(3) * * *

(i) Part would be ''FAR part 9'' outside the FAR and ''part 9'' within the FAR.

(ii) Subpart would be ''FAR subpart 9.1'' outside the FAR and ''subpart 9.1'' within the FAR.

* * * * *

PART 16—TYPES OF CONTRACTS

16.301–3 [Amended]

■ 3. Amend section 16.301–3 by removing from paragraph (a)(4) ''other that firm-fixed-priced'' and adding ''other than firm-fixed-priced'' in its place.

PART 22—APPLICATION OF LABOR LAWS TO GOVERNMENT ACQUISITIONS

22.1801 [Amended]

■ 4. Amend section 22.1801 by—

■ a. Removing from the definition ''Employee assigned to the contract'', ''November 6, 1986'' and adding ''November 6, 1986 (after November 27, 2009, in the Commonwealth of the Northern Mariana Islands)'' in its place; and

■ b. Removing from the definition ''United States'', ''Guam,'' and adding ''Guam, the Commonwealth of the Northern Mariana Islands'' in its place.

22.1802 [Amended]

■ 5. Amend section 22.1802 by removing from paragraph (c) ''November 6, 1986'' and adding ''November 6, 1986 (after November 27, 2009, in the Commonwealth of the Northern Mariana Islands)'' in its place.

PART 52—SOLICITATION PROVISIONS AND CONTRACT CLAUSES

52.212–5 [Amended]

■ 6. Amend section 52.212–5 by—

■ a. Removing from the clause heading ''(May 2012)'' and adding ''(JUL 2012)'' in its place; and

■ b. Removing from paragraphs (b)(34) and (e)(1)(xii) ''(Jan 2009)'' and adding ''(JUL 2012)'' in their places; and

■ c. Removing from the introductory paragraph of Alternate II ''(Dec 2010)'' and adding ''(JUL 2012)'' in its place; and

■ d. Removing from Alternate II, in paragraph (e)(1)(ii)(L) ''(Jan 2009)'' and adding ''(JUL 2012)'' in its place.

52.215–20 [Amended]

■ 7. Amend section 52.215–20 by removing from the introductory paragraph of Alternate I ''15.408(1)'' and adding ''15.408(l)'' in its place.

■ 8. Amend section 52.222–54 by—

■ a. Revising the date of the clause;

■ b. Amending paragraph (a) by—

■ i. In the definition ''Employee assigned to the contract'', in the introductory text, removing ''November 6, 1986'' and adding ''November 6, 1986 (after November 27, 2009, in the Commonwealth of the Northern Mariana Islands)'' in its place; and

■ ii. Removing from the definition ''United States'', ''Guam,'' and adding ''Guam, the Commonwealth of the Northern Mariana Islands'' in its place; and

■ c. Revising paragraph of (b)(4) introductory text.

The revisions read as follows:

52.222–54 Employment Eligibility Verification.

* * * * *

Employment Eligibility Verification (JUL 2012)

* * * * *

(b) * * *

(4) *Option to verify employment eligibility of all employees.* The Contractor may elect to verify all existing employees hired after November 6, 1986 (after November 27, 2009, in the Commonwealth of the Northern Mariana Islands), rather than just those employees assigned to the contract. The Contractor shall initiate verification for each existing employee working in the United States who was hired after November 6, 1986 (after November 27, 2009, in the Commonwealth of the Northern Mariana Islands), within 180 calendar days of—

* * * * *

■ 9. Amend section 52.223–2 by revising the date of the clause and paragraph (b); and removing from paragraph (c)(3) ''contract to'' and adding ''contact to'' in its place. The revised text reads as follows:

52.223–2 Affirmative Procurement of Biobased Products Under Service and Construction Contracts.

* * * * *

Affirmative Procurement of Biobased Products Under Service and Construction Contracts (JUL 2012)

* * * * *

(b) Information about this requirement and these products is available at *http://www.biopreferred.gov.*

* * * * *

[FR Doc. 2012–17739 Filed 7–25–12; 8:45 am]

BILLING CODE 6820–EP–P

DEPARTMENT OF DEFENSE

GENERAL SERVICES ADMINISTRATION

NATIONAL AERONAUTICS AND SPACE ADMINISTRATION

48 CFR Chapter 1

[Docket FAR 2012–0081, Sequence 5]

Federal Acquisition Regulation; Federal Acquisition Circular 2005–60; Small Entity Compliance Guide

AGENCIES: Department of Defense (DoD), General Services Administration (GSA), and National Aeronautics and Space Administration (NASA).

ACTION: Small Entity Compliance Guide.

SUMMARY: This document is issued under the joint authority of DOD, GSA, and NASA. This *Small Entity Compliance Guide* has been prepared in accordance with section 212 of the Small Business Regulatory Enforcement Fairness Act of 1996. It consists of a summary of the rule appearing in Federal Acquisition Circular (FAC) 2005–60, which amends the Federal Acquisition Regulation (FAR). An asterisk (*) next to a rule indicates that a regulatory flexibility analysis has been prepared. Interested parties may obtain further information regarding this rule by referring to FAC 2005–60, which precedes this document. These documents are also available via the Internet at *http://www.regulations.gov.*

DATES: July 26, 2012.

FOR FURTHER INFORMATION CONTACT: For clarification of content, contact the analyst whose name appears in the table below. Please cite FAC 2005–60 and the FAR case number. For information pertaining to status or publication schedules, contact the Regulatory Secretariat at 202–501–4755.

LIST OF RULES IN FAC 2005–60

Item	Subject	FAR Case	Analyst
I*	Reporting Executive Compensation and First-Tier Subcontract Awards	2008–039	Clark.
II	Payments Under Time-and-Materials and Labor-Hour Contracts	2011–003	Chambers.
III*	Extension of Sunset Date for Protests of Task and Delivery Orders (Interim)	2012–007	Lague.
IV	DARPA-New Mexico Tax Agreement	2012–019	Chambers.

LIST OF RULES IN FAC 2005–60—Continued

Item	Subject	FAR Case	Analyst
V	Clarification of Standards for Computer Generation of Forms	2011–022	Lague.
VI	Technical Amendments.		

SUPPLEMENTARY INFORMATION: Summaries for each FAR rule follow. For the actual revisions and/or amendments made by these FAR cases, refer to the specific item numbers and subject set forth in the documents following these item summaries. FAC 2005–60 amends the FAR as specified below:

Item I—Reporting Executive Compensation and First-Tier Subcontract Awards (FAR Case 2008–039)

The interim rule published in the **Federal Register** at 75 FR 39414 on July 8, 2010, is adopted as final with changes. This rule implements section 2 of the Federal Funding Accountability and Transparency Act of 2006 (Pub. L. 109–282), which requires the Office of Management and Budget to establish a free, public, Web site containing full disclosure of all Federal contract award information.

The interim rule required contractors to report executive compensation and first-tier subcontract awards on contracts expected to be $25,000 or more. This information is available to the public.

The final rule removes the exception for inserting the clause in classified solicitations and contracts, or solicitations or contracts with individuals. Classified information is not required to be disclosed. The clause is not prescribed for contracts unless they are required to be reported in the Federal Procurement Data System (FPDS). The final rule clarifies the responsibility of contracting officers to correct data originating from FPDS found by the contractor to be in error when the contractor completes the subcontract report. The definition of first-tier subcontractor is revised to allow contractors greater flexibility to determine their first-tier subcontractors. The rule also clarifies that a contractor must enter Transparency Act data when registering in the Central Contractor Registration (CCR) database and the contractor is required to report its executive compensation in CCR as a part of its annual registration requirement in CCR.

Item II—Payments Under Time-and-Materials and Labor-Hour Contracts (FAR Case 2011–003)

This final rule amends the FAR with regard to payments under time-and-materials and labor-hour contracts. First, the rule harmonizes payment provisions under commercial time-and-materials and labor-hour contracts and non-commercial time-and-materials and labor-hour contracts, largely by having commercial time-and-materials and labor-hour contracts adopt the payment provisions of non-commercial time-and-materials and labor-hour contracts. Second, the rule harmonizes conflicting provisions of the ''Allowable Cost and Payment'' and ''Payments Under Time-and-Materials'' and ''Labor-Hour Contracts'' clauses, which are both prescribed under non-commercial time-and-materials contracts and labor-hour contracts, by using the same periods for invoicing, and submission of the completion voucher as those set forth in the ''Allowable Cost and Payment'' clause. This harmonization will serve to benefit small businesses under time-and-materials and labor-hour contracts by permitting bi-weekly rather than monthly invoicing, and providing contracting officers with the discretion to authorize even more frequent payments.

Item III—Extension of Sunset Dates for Protests of Task and Delivery Orders (FAR Case 2012–007) (Interim)

This interim rule amends the FAR to implement section 825 of the Ike Skelton National Defense Authorization Act for Fiscal Year 2011 (Pub. L. 111–383) and section 813 of the National Defense Authorization Act for Fiscal Year 2012 (Pub. L. 112–81). These statutes extend the sunset date for protests against awards of task or delivery orders to September 30, 2016. There is no effect on Government automated systems.

Item IV—DARPA-New Mexico Tax Agreement (FAR Case 2012–019)

This final rule amends the FAR to add the United States Defense Advanced Research Projects Agency (DARPA) to the list of agencies that have entered into an agreement with the State of New Mexico. The agreement eliminates the double taxation of Government cost-reimbursement contracts when contractors and their subcontractors purchase tangible personal property to be used in performing services in whole or in part in the State of New Mexico, and for which title to such property will pass to the United States upon delivery of the property to the contractor and its subcontractors by the vendor. Small businesses benefit from this agreement because they will no longer have the administrative effort and cost associated with collecting this tax.

Item V—Clarification of Standards for Computer Generation of Forms (FAR Case 2011–022)

DoD, GSA, and NASA published a proposed rule in the **Federal Register** at 76 FR 79609 on December 22, 2011, to implement the removal of Federal Information Processing Standard (FIPS) 161. FIPS 161 is being removed based on the notice posted in the **Federal Register** at 73 FR 51276 on September 2, 2008, by the Department of Commerce. This is a technical change acknowledging the removal by the Department of Commerce of FIPS 161 and replacement with the American National Standards Institute (ANSI) X12 set of standards. There is no impact to the Government or contractors in establishing ANSI X12 as the new standard. Small businesses will continue to be able to generate forms by computer. No public comments were received on the proposed rule, therefore, the final rule will be published with no changes.

Item VI—Technical Amendments

Editorial changes are made at FAR 1.105–2, 16.301–3, 22.1801, 22.1802, 52.212–5, 52.215–20, 52.222–54, and 52.223–2.

Dated: July 16, 2012.

Laura Auletta,

Director, Office of Governmentwide Acquisition Policy, Office of Acquisition Policy, Office of Governmentwide Policy.

[FR Doc. 2012–17742 Filed 7–25–12; 8:45 am]

BILLING CODE 6820–EP–P

FEDERAL REGISTER

Vol. 77 Thursday,

No. 144 July 26, 2012

Part VI

Department of Justice

Drug Enforcement Administration

Grider Drug #1 & Grider Drug #2; Decision and Order; Notice

DEPARTMENT OF JUSTICE

Drug Enforcement Administration

[Docket No. 08–19]

Grider Drug #1 & Grider Drug #2; Decision and Order

On October 30, 2007, the Deputy Assistant Administrator, Office of Diversion Control, Drug Enforcement Administration, issued an Order to Show Cause to Grider Drug #1, the holder of DEA Certificate of Registration No. AG3498347, and Grider Drug #2, the holder of DEA Certificate of Registration No. AG9715751, (hereinafter, Respondent or Respondents), of Russell Springs, Kentucky.[1] ALJ Ex. 1, at 1. The Show Cause Order proposed the revocation of each Respondent's retail pharmacy registration, as well as the denial of any pending applications to renew or modify each registration, on the ground that the Respondents' ''continued registrations are inconsistent with the public interest.'' *Id.* (citing 21 U.S.C. 823(f); 824(a)). The Show Cause Order alleged that each Respondent had committed numerous violations of federal regulations, as well as that Leon Grider, the owner of Respondents, had been indicted on state law charges of trafficking in controlled substances and bribing a witness.[2] *Id.* at 4.

Subsequently, on June 22, 2010, the Government raised additional allegations that Respondents were dispensing prescriptions to six persons engaged in doctor-shopping and that ''Respondents knew or should have known that the above dispensed controlled substances were likely to be diverted or used for other than legitimate medical purposes'' and that they ''failed to fulfill their corresponding responsibility for the proper dispensing of controlled substances.'' GX 21, at 1–3. Based on the allegations that this conduct had continued through early May 2010, I concluded that there was a ''substantial likelihood'' that it would continue. *Id.* at 3. Accordingly, I concluded that Respondents' continued registration during the pendency of the proceedings ''would constitute an imminent danger to the public health and safety'' and authorized the immediate suspension of each Respondent's registration.[3] *Id.* at 3–4.

Following service of the initial Show Cause Order, Respondents requested a hearing on the allegations and the matter was placed on the docket of the Agency's Office of Administrative Law Judges (ALJ) and assigned to an ALJ, who proceeded to conduct pre-hearing procedures. On June 6, 2008, the ALJ granted Respondents' motion to stay the proceedings pending the conclusion of a state-court criminal case against their owner Leon Grider, which was scheduled to conclude on October 10, 2008, noting that ''the parties believe that the presentation of evidence in the above-captioned matter will be facilitated.'' Order Granting Stay of Proceedings, at 1. However, nine months later, after further delays in the state proceeding, the ALJ terminated the stay, and finally, in August 2009, the ALJ commenced the hearing.[4]

Giving new force to Justice Douglas's dissenting opinion in *Sierra Club* v. *Morton,*[5] the parties proceeded to take twenty-seven days of testimony over the ensuing twenty months and create a record comprised of more than 6200 pages of transcript as well as several thousand pages more of various exhibits, with much of the record devoted to litigating issues which are plainly irrelevant. Primary responsibility for the state of the record lies with the ALJ, who failed to exercise anything more than minimal control over the parties' respective presentations.

After the hearing, both parties submitted briefs containing their proposed findings of fact, legal conclusions and argument.[6] Thereafter, on September 23, 2011, the ALJ issued her recommended decision.

With respect to factors two (Respondents' experience in dispensing controlled substances) and four (Respondents' compliance with applicable laws related to controlled substances), the ALJ found, *inter alia,* that Respondents' owner, Leon Grider, had, on various occasions, distributed controlled substances to several persons without a prescription. ALJ at 85–85. Based on audits which Respondents paid an accounting firm to conduct on themselves, the ALJ further found that Respondents could not ''account for a substantial number of dosage units of controlled substances'' including hydrocodone and methadone. *Id.* at 85–86. In addition, the ALJ found that Respondents did not report various thefts of controlled substances and failed to reduce to writing and maintain called-in prescriptions. *Id.* at 87.

The ALJ further found that Respondents had violated their corresponding responsibility under 21 CFR 1306.04(a) by dispensing to the six persons (as alleged in the Immediate Suspension Order) controlled-substance prescriptions which lacked a legitimate medical purpose and that Respondents' pharmacists ignored various red flags indicative that the patients were engaged in drug abuse or diversion. *Id.* at 89–90.

Next, the ALJ rejected various allegations of violations that were based on data from the State of Kentucky's Prescription Monitoring Program (KASPER) on the ground that the Government had not obtained a court order as required by state law to render these reports and the underlying data contained in them admissible in this proceeding. ALJ at 91. However, the ALJ found that Respondents had violated federal regulations by dispensing schedule II controlled substances without retaining the hard copy of the prescription, as well as by dispensing prescriptions ''that were never called-in or authorized by the prescribing physicians.'' *Id.* at 92.

As for factor five—such other conduct which may threaten public health and safety—the ALJ found that Respondents' pharmacists had improperly billed Medicaid for medications (including controlled substances) by billing for one medication while actually dispensing another and that this conduct circumvented ''the prescription check and balance such Medicaid reporting creates.'' ALJ at 94. In addition, the ALJ found that Leon Grider had ''inaccurately'' labeled prescription bottles as well as placed false prescription labels on bottles he provided to a confidential informant. *Id.*

Based on her findings under factors two, four, and five, the ALJ thus concluded that the Government had satisfied its *prima facie* case by showing that Respondent had committed acts inconsistent with the public interest. *Id.* at 95. The ALJ then held that

[1] The Order also sought the revocation of the registration issued to a third pharmacy, Grider Drug Key Village. ALJ Ex. 1, at 1. However, this store discontinued selling pharmaceuticals in November 2008 and the proceeding was subsequently terminated with respect to it. ALJ Ex. 5.

[2] The specifics of the various allegations are discussed below.

[3] Apparently, the Government raised additional allegations in its pre-hearing statements.

[4] The ALJ also granted three continuances because of the medical condition of Respondent's counsel. Tr. 3005.

The proceeding also included an interlocutory appeal to this Office by Respondents of the ALJ's denial of their motion to stay the proceeding while they sought the return of numerous documents which were seized by the Kentucky Bureau of Investigation and the Medicaid Fraud Unit of the Kentucky's Attorney General's Office pursuant to a state criminal search warrant. *See* ALJ Ex. 10. I denied the interlocutory appeal. *See* ALJ Ex. 11.

[5] *See* 405 U.S. 727, 741 (1972) (citing Stone, 45 S. Cal. L. Rev. 450 (1972)).

[6] These submissions will be cited as Gov. Post-Hearing Br. and Resp. Post-Hearing Br., respectively.

Respondents had failed to rebut the Government's *prima facie* showing, noting that Respondents' owner did not testify and thus had not shown ''any remorse for the past failings of the Respondents or [that] he ha[s] implemented any procedures that would ensure such failings do not occur in the future.'' *Id.* In addition, the ALJ noted that Eric Grider (Respondents' owner's son and the pharmacist in charge at Grider #2) testified that ''Respondents had not implemented any operational or policy changes in response to this proceeding,'' and that even after the service of the first Show Cause Order, Respondents had continued to violate 21 CFR 1306.04(a) by failing to fulfill their corresponding responsibility to not dispense unlawful prescriptions. *Id.* at 95–96. Finally, the ALJ rejected Respondents' contentions that the violations proved by the Government were ''so minor and understandable in pharmacies doing extensive filling of controlled substances that those violations are insufficient * * * to justify suspension, revocation and/or denial of'' their registrations. *Id.* at 96. The ALJ thus recommended the revocation of Respondents' registrations and the denial of their pending applications. *Id.*

Respondents filed exceptions to the ALJ's decision.[7] Thereafter, the ALJ forwarded the record to me for final agency action.

Having considered the entire record, I adopt the ALJ's conclusions of law with respect to factors two and four, as well as her ultimate conclusion that Respondents have committed acts which render their registrations inconsistent with the public interest.[8] I also adopt the ALJ's legal conclusion that Respondents have not rebutted the Government's *prima facie* case. I therefore also adopt her recommended order. I make the following findings.

Findings of Fact

Respondents' Registration and License Status

Respondent Grider Drug #1 is the holder of DEA Certificate of Registration AG3498347, under which it was authorized to handle controlled substances at the registered location of 539 Main St., Russell Springs, Kentucky. GX 1. While this registration was due to expire on September 30, 2005, on August 23, 2005, Respondent filed a renewal application. GX 2. According to an affidavit of an official in charge of the DEA Registration Unit, upon filing this application, Respondent was authorized to continue dispensing controlled substances until the issuance of the immediate suspension order on June 22, 2010. *Id.* I therefore find that Grider Drug #1 has both a registration and an application currently pending before the Agency.

Respondent Grider Drug #2 formerly held DEA Certificate of Registration AG9715751, which authorized it to handle controlled substances at the registered location of 124 Dowell Rd., Russell Springs, Kentucky. GX 3. The expiration date of this registration was September 30, 2008, and Respondent did not file a renewal application until September 25, 2008. GX 4. According to an affidavit of the official in charge of the DEA Registration Unit, upon filing this application, Respondent was authorized to continue dispensing controlled substances until the issuance of the immediate suspension order on June 22, 2010. However, while the official's affidavit states that this was timely renewal application, *id.,* it was not because on October 30, 2007, the instant Order to Show Cause was issued to Grider #2, and under the Agency's regulation, when an Order to Show Cause has been issued to a registrant, the registrant must submit its renewal application ''at least 45 days before the date on which the existing registration is due to expire'' in order for its registration to be continued pending the issuance of the final order. 21 CFR 1301.36(i). Accordingly, I find that Respondent Grider Drug #2's registration expired on September 30, 2008. However, Respondent's Grider Drug #2's application is pending before the Agency. *See Paul H. Volkman,* 73 FR 30630, 30641 (2008), *pet. for rev. denied* 567 F.3d 215 (6th Cir. 2009).

The record contains evidence that Leon Grider, who is the pharmacist-in-charge at Grider Drug #1, owns both pharmacies. However, there is also some evidence that other Grider family members own shares in the pharmacies.

The Substantive Allegations

In the initial Show Cause Order, the Government raised a plethora of allegations. ALJ Ex. 1. These allegations included, *inter alia,* that:

(1) Grider #1 and #2 had refilled schedule II controlled substances seventeen and eight times respectively, in violation of 21 CFR 1306.12;

(2) Grider #1 and # 2 had refilled prescriptions for schedule III–V controlled substances without the prescribing physician's authorization fifty-seven and seventeen times respectively, in violation of 21 CFR 1306.21(a);

(3) Grider #1 and #2 filled prescriptions bearing invalid or expired DEA registration numbers 186 and 161 times respectively, in violation of 21 CFR 1306.05;

(4) Grider #1 refilled prescriptions for schedule III and IV controlled substances more than six months after the date of the original prescription, in violation of 21 CFR 1306.22(a);

(5) Grider #1 and Grider #2 engaged in the unauthorized transfer of prescriptions and prescription refills from Grider Drug Key Village 289 and 40 times respectively, in violation of 21 CFR 1306.25(a);[9]

(6) data from the Kentucky All-Schedule Prescriptions Electronic Reporting System (hereinafter, KASPER) show that Grider #1 had filled schedule III–V prescriptions for which it could not produce the actual prescription in nine instances, in violation of 21 CFR 1306.21(a);

(7) Grider #1 and #2 failed to take and maintain a biennial inventory, as required by 21 CFR 1304.11(c);

(8) ''[a]n accountability audit of 50 controlled substances covering [the] period of May 31, 2003 to August 19, 2004, revealed a shortage of 22,219 dosage units of controlled substances'' at Grider #1 and 105,913 dosage units at Grider #2;

(9) Grider Drug #1 ''filled four controlled-substance prescriptions which incorrectly listed Grider Drug #2 as the 'issuing physician' and that Grider #2 filled several schedule II controlled-substance prescriptions which listed itself as the physician, in violation of 21 CFR 1306.05(a); and

(10) Grider Drug #1 and Grider Drug #2 engaged in 133 unauthorized

[7] Respondent's Exceptions have been thoroughly considered and are discussed throughout this decision.

[8] The ALJ's factual findings comprise 270 paragraphs, many of which contain multiple findings. As explained below, I adopt some of the findings and reject others for a variety of reasons. For example, the ALJ made extensive findings based on KASPER data and reports only to ultimately conclude that the KASPER data and reports were not admissible. *Compare* ALJ at 49–54, *with id. at* 91–92. However, because I conclude that the ALJ correctly held that the KASPER data were not admissible, and cannot be disclosed other than in accordance with the KASPER statute, she should not have made these findings. The ALJ also made extensive findings as to the result of a Government audit of Respondents' handling of controlled substances which was performed by a new Diversion Investigator. *Id.* at 59–63. However, the Government did not rely on this audit, and its lead witness candidly acknowledged that the audit was flawed. Because these findings are not probative of any issue in the case, they should not have been made. Other findings of the ALJ are discussed throughout this opinion.

[9] The Show Cause Order also alleged that Grider Drug Key Village engaged in 139 unauthorized transfers of controlled substance prescriptions and refills from Grider Drug #1 to Grider Drug Key Village and 150 unauthorized transfers of prescriptions and refills from Grider #2 to Grider Drug Key Village. ALJ Ex. 1, at 3–4.

transfers of prescriptions and prescription refills between themselves, in violation of 21 CFR 1306.25(a). *Id.* The Government raised additional allegations in its Pre-Hearing Statements, as well as in the Immediate Suspension Order. ALJ 21.

The Admissibility of KASPER Data

With respect to most of these allegations, a principal component of the Government's proof was reports and/or data contained in reports which were obtained by law enforcement personnel from the State of Kentucky's KASPER system. Notwithstanding Respondents' repeated objection to the use of this data on various grounds, the ALJ relied on it to make numerous findings regarding the allegations that Respondents had filled prescriptions under expired, invalid, or surrendered DEA numbers, that Respondents listed themselves as the prescribing physician in numerous instances, that Respondents refilled schedule II controlled substance prescriptions, that Respondent dispensed prescriptions without retaining a hard copy of them, and that Respondents dispensed refills of prescriptions for schedule III–V drugs which were not authorized. ALJ at 49–54. However, in her conclusions of law, the ALJ noted that Respondents also challenged the admissibility of the KASPER reports, and held that under Kentucky law, a court order is required for the reports and the data contained therein to be admissible in this proceeding. ALJ at 91 & n.46 (citing Ky. Rev. Stat. § 218A.202(8); *Sangster* v. *Kentucky Bd. of Med. Lic.,* 2010 WL 4294213 (Ky. Ct. App. 2010)).[10]

In its post-hearing brief, the Government argued that in several previous proceedings, the Agency's final orders had relied on KASPER data in making various findings. Gov. Br., at 101. *See Paul Volkman,* 73 FR 30630, 30633 (2008). However, as the ALJ recognized, the admissibility of KASPER reports and data has not been previously challenged in a DEA proceeding.

Under Kentucky law, KASPER data may only be disclosed ''to persons and entities authorized to receive that data under this section. Disclosure to any other person or entity, including disclosure in the context of a civil action where the disclosure is sought either for the purpose of discovery or for evidence, is prohibited unless specifically authorized by this section.'' Ky. Rev. Stat. § 218A.202(6). The statute authorizes disclosure of KASPER data to eight categories of persons or entities, including: (1) ''[a] designated representative of a board responsible for the licensure, regulation, or discipline of practitioners, pharmacists, or other person authorized to prescribe, administer, or dispense controlled substances and who is involved in a bona fide specific investigation involving a designated person''; and (2) a certified peace officer of a State, ''or a federal peace officer whose duty is to enforce the laws of this Commonwealth, of another state, or of the United States relating to drugs and who is engaged in a bona fide specific investigation involving a designated person.'' *Id.*

However, ''[a]uthorized users must apply for an account'' and provide appropriate proof of their identity and credentials. RX 42, at 20. Most significantly, applicants must also execute an account use agreement pursuant to which they agree that access to KASPER ''is granted only with the authority and rights allowed under KRS 218A.202,'' as well as ''to use the reports only in manners set forth under KRS 218A.202.'' RX 52, at 1. *See also* Tr. 179 (testimony of supervisory DI: ''We have an account with KASPER and in order to get that account we had to apply to KASPER and get all our information notarized and then approved by the Cabinet for Health Services.'').

The KASPER statute further provides that ''[a] person who receives data or any report of the system from the cabinet shall not provide it to any other person or entity except by order of a court of competent jurisdiction and only to a person or entity authorized to receive the data or the report under this section, except'' when done pursuant to three exceptions, none of which apply here. KRS § 218A.202(8). While one of these exceptions provides that ''[t]he Department for Medicaid Services may submit the data as evidence in an administrative hearing held in accordance with KRS Chapter 13B,'' an Opinion of the Kentucky Attorney General explains that:

> The fact that the General Assembly deemed it necessary to make a special exception for Medicaid hearings indicates that administrative hearings, in general, were not contemplated as a permissible forum for disclosure of KASPER data. We must therefore conclude that data from the KASPER system cannot, without a court order, be used as either documentary or testimonial evidence in an administrative hearing before the Board of Medical Licensure. Any drug transactions at issue in the hearing must be proved from other sources.

5 Op. Ky. Att'y Gen. 7, at 6 (2005). However, as the Kentucky Attorney General further explained, ''there is no 'fruit of the poisonous tree' doctrine associated with KRS 218A.202, which would make the use of the KASPER information as a starting point for seeking confirming evidence into the equivalent of a 'disclosure.' '' *Id.* at 7.

More recently, the Supreme Court of Kentucky has held that the KASPER statute creates an evidentiary privilege, which fosters important objectives, even if it is not absolute. *Commonwealth Cabinet for Health and Family Services* v. *Chauvin,* 316 SW.3d 279, 288 (Ky. 2010). In *Chauvin,* the Kentucky Supreme Court further explained that the statute's exceptions which permit disclosure ''are rather limited and do not undermine the general prohibition on disclosure.'' *Id.*[11]

Here, while there is no argument that DEA Investigators were authorized to obtain KASPER data to pursue their investigation, they agreed, as a condition of obtaining this data, to use the reports only in the manners permitted under Kentucky law. However, as explained above, with the exception of a state Medicaid proceeding, Kentucky law does not authorize disclosure of this information in an administrative proceeding without a court order. Because DEA Investigators did not obtain a court order authorizing the use of the KASPER data in this proceeding and agreed to use the reports and data only as authorized by Kentucky law, the reports and data contained therein were not admissible.

Accordingly, the ALJ should not have made any findings based on them. However, where DEA Investigators merely used the KASPER reports and data as an investigative tool to facilitate the search for other evidence which establishes violations on the part of Respondents, that other evidence is admissible. Accordingly, I turn to whether the various allegations set forth above are supported by substantial evidence.[12]

[10] Given the ALJ's conclusion that this evidence was not admissible, it is perplexing that the ALJ made numerous factual findings relying on this evidence.

[11] Under 21 U.S.C. 876(a), the Attorney General is authorized to ''require the production of any records * * * which the Attorney General finds relevant or material to'' an investigation under the CSA. This case does not, however, present any question as to whether the CSA preempts the KASPER statute's prohibition against disclosure in a proceeding under 21 U.S.C. 824(a).

[12] The Government also introduced data from the DEA ARCOS system to show Respondents' purchases of oxycodone and hydrocodone in various years and compare them with the average purchases of pharmacies in the local area, the State of Kentucky, and United States. However, while some of the figures show that Respondents were purchasing greater quantities than the average of the pharmacies in these categories, some of the data shows the opposite. And while the hydrocodone

Allegation One—Refilling Schedule II Controlled Substances

The Controlled Substances Act explicitly prohibits the refilling of a schedule II controlled substance. *See* 21 U.S.C. 829(a).[13] With respect to Grider #1, the Government produced copies of fifteen schedule II prescriptions which it alleged were refilled. GX 13. However, with respect to many of these prescriptions, the DI testified (and/or the copies of the prescriptions include a handwritten notation) that his finding was based on his review of the KASPER report. Tr. 357–371; GX 13, at 3, 7, 9, 15, 17, 19. In another instance, the DI identified two prescriptions for OxyContin issued to a patient on December 20, 2002 (with a fill date of 1/30/03) and February 13, 2003. GX 13, at 5–6; Tr. 361. However, when questioned regarding these prescriptions, the DI testified that ''I made no annotations. I don't think I saw anything really wrong with these two.'' Tr. 361. And with respect to other prescriptions in this exhibit (*See* GX 13, at 11–14), the DI offered no explanation at all as to why they were included. Tr. 364–65.

The Government's Exhibit with respect to Grider #2's refilling of schedule II drugs contained thirteen prescriptions (two of which were actually for Lortab, a schedule III drug, and Xanax, a schedule IV drug). *See* GX 15. Here again, the Government's contention that Grider #2 refilled the schedule II prescriptions was based on inadmissible KASPER data. Tr. 418–35 (DI's testimony at Tr. 427: ''[a]ll the prescriptions and the annotations [in GX 15] were done in comparing and contrasting with KASPER.''). In addition, with respect to the first prescription contained in this exhibit (which was for a schedule II drug), the DI acknowledged that the prescription had not been refilled. *Id.* at 420. Instead, the DI's concern was prompted by the fact that the KASPER report indicated that it had been filled on a Sunday, when the pharmacy was closed. *Id.* Even if this fact was adduced by admissible evidence, by itself, it would not constitute substantial evidence of any violation of the CSA.

However, another document in this exhibit is a copy of a label for a hydrocodone prescription. GX 15, at 4. Consistent with the annotation on this document, the DI testified that during a 2004 search of Respondents, Investigators did not find either a hard copy (*i.e.,* a prescription signed by the prescriber) or a called-in prescription. Tr. 422. Rather, the only document found by the Investigators was the label. *Id. See also* Tr. 468–74 and GX 39, at 4 (dispensings for Duragesic (fentanyl) and Roxicet filled on April 8, 2003 to patient LC). As explained more fully below, this evidence does constitute substantial evidence of a violation of the CSA, which prohibits the dispensing of controlled substances by a pharmacist without a prescription. *See* 21 U.S.C. 829(a) (schedule II) & (b) (schedules III & IV).

The DI also testified to a split distribution of a prescription for 15 Duragesic patches, noting that ten of the patches had been dispensed initially and the remaining five had been dispensed eight days later and that this was ''an instance where it seems the pharmacy didn't have enough in stock.'' Tr. 426. However, once again, this allegation was based on inadmissible KASPER data and no other evidence establishes that the prescription was dispensed in this manner.

Allegation Two—Refilling Schedule III Through V Prescriptions Without Authorization of the Prescriber

As noted above, the Government alleged that both Respondents dispensed numerous unauthorized refills of schedule III through V controlled substances. However, the documentary evidence with respect to Grider #1 included only four prescriptions (two for hydrocodone combination drugs, and two for Ambien (zolpidem)); with respect to Grider #2, the evidence included only six prescriptions (three for Xanax, one for diazepam, and two for Lorcet (hydrocodone)). *See* GXs 14 & 16. In addition, the Government offered the testimony of its lead DI and Dr. CS and two exhibits regarding Grider #1's dispensing of multiple refills for Dr. CS's patient BW. *See* GXs 30 & 31.

As for the prescriptions contained in GX 14 (Grider #1), once again the DI relied on the KASPER data in concluding that Grider #1 had dispensed unauthorized refills. GX 14, at 1–2. As for the Grider #2 prescriptions, the first prescription found in GX 16 (a Xanax prescription to BP, which authorized no refills) was the subject of the DI's concern because while both the prescription and the label were dated June 5, 2003, KASPER data indicated that it was filled eighteen days later. GX 16, at 1–2. However, there is no contention that the KASPER data shows that the prescription was filled on both dates, and thus, even if this data was admissible, it would not establish that this was an unauthorized refill as there is otherwise no indication that this prescription was filled more than once.

The DI further asserted that per KASPER records, a June 18, 2003 prescription for Xanax issued to JB, which authorized no refills, was filled on both June 18 and June 19, 2003. *Id.* at 3. Once again, the Government produced no other evidence to prove its allegation.[14] However, the Government did produce a copy of a label for a Xanax prescription which was dispensed on March 12, 2003 to JB. *Id.* at 6. According to the DI's testimony (and a notation on the copy), Investigators could not find either the original signed prescription or a called-in prescription for this dispensing. *Id.;* Tr. 442.

Also included in this exhibit were two prescriptions for 30 Lorcet (TID, a 10-day supply), with no refills, which were dated December 24, 2002, and January 3, 2003, as well as labels indicating that the prescriptions were filled on December 31, 2002 and January 6, 2003. GX 16, at 7–8. Next to the signed prescription which is dated January 3, 2003, is the handwritten notation: ''Script filled 1–6–2003, just one (1) day after refilling script above!'' *Id.* at 7. However, the Government elicited no testimony from the DI explaining the basis for this statement. Tr. 441–44. Here again, this does not constitute substantial evidence of the allegation.

However, the evidence also shows that on June 6, 2007, Dr. CS issued a prescription for 91 Lortab 7.5/500 to BW, with no refills, with instructions to take a decreasing dose of the medicine at two-week intervals and then stop. GX 30, at 1. The evidence further shows

data generally shows that Respondents purchased more than the average pharmacy in each of the three categories, no further evidence was offered to explain the statistical significance of Respondents' purchases. Moreover, in its brief, the Government offered no further explanation as to what this evidence proved.

[13] However, under a DEA regulation promulgated several years after the prescriptions at issue here, a practitioner ''may issue multiple prescriptions authorizing the patient to receive a total of up to a 90-day supply of a schedule II controlled substances provided'' that several ''conditions are met,'' including that the ''practitioner provides written instruction on each prescription * * * indicating the earliest date on which a pharmacy may fill each prescription.'' 21 CFR 1306.12(a).

[14] This page of GX 16 also includes a March 26, 2003 prescription for Xanax with no refills issued by the same physician to JB and a copy of the prescription label which bears the date ''03/26/03.'' GX 16, at 3–4. No contention was made that this prescription was improperly refilled. In addition, the exhibit contains an August 14, 2003 prescription for diazepam issued by a Dr. JE with two refills, and a label for the dispensing which is dated ''09/16/03.'' *Id.* at 5–6. Here again, no contention was raised that this prescription was improperly refilled.

that the prescription was dispensed on the date of issuance. *Id.*

Dr. CS testified that in 2006, she instituted a policy that her staff was not authorized to call in refills because she had received two phone calls from pharmacies that patients were ''masquerading as [her] office staff, trying to obtain * * * Lortab.'' Tr. 3031–32. Dr. CS further testified that on June 6, 2007, BW had wanted to get off of Lortab and that the prescription she wrote was to taper BW off of the drug. Tr. 3050–52, 3056.

According to the evidence, another doctor had run a KASPER on BW and upon noticing that she was getting Lortab refills, contacted Dr. CS regarding the refills. GX 30, at 2. On November 9, 2007, Dr. CS's Office Manager (LBB) then called Grider #1 and spoke with Leon Grider regarding the refills and documented this conversation in BW's medical record. Tr. 3040, 3054–55. According to the note:

He [Leon Grider] stated that the DEA has the original prescription and he would contact them to fax it to us. He also stated that Richard Potters filled the original prescription and it showed 0 refills. He said someone from our office must have called in refills. The last one filled was on 10/18/07. I informed him that we do not call in controlled's-which is stated in our policy. We also discussed that controlled's prescribed from our office are not to be refilled earlier than one day.—lbb

GX 70.[15] Dr. CS further testified that no one from her office had called in refills for BW. Tr. 3055–56. Dr. CS subsequently filed a complaint with the State Attorney General regarding the refills.[16] *Id.* at 3056.

While the note recorded by Dr. CS's Office Manager is hearsay, I conclude that it is sufficiently reliable to constitute substantial evidence. Leon Grider's statements establish that he did in fact refill Dr. CS's prescription and constitute an admission. While that statement was made to Dr. CS's Office Manager, it was recorded in the patient's medical record, a source of evidence which the Supreme Court has long recognized as inherently reliable. *See Richardson* v. *Perales,* 402 U.S. 389 (1971). Moreover, Leon Grider did not testify and refute this evidence. Thus, this allegation is proved without resort to the KASPER data.[17]

[15] Dr. CS testified that GX 70 ''are notes that I made from my chart records concerning the patient who had brought complaints to me about discrepancies or discrepancies that we found during their visits, and also [a] note about one patient who actually had unauthorized refills.'' Tr. 3040.

[16] Respondent's star witness was James Faller, a federally convicted swindler and money launderer, *see* GXs 79 (judgment of conviction) & 80 (opinion of the Eleventh Circuit denying appeal), who was allowed to sit in on the entire proceeding as a representative of Respondents and then testify regarding the various allegations. Faller asserted that Dr. CS ''was in some kind of trouble'' and ''was under some kind of investigation'' because her prescription pads had been stolen and that these were used to obtain controlled substances which were used by employees of the call center Faller ran. Tr. 5508. He then maintained that he had evidence to contradict Dr. CS's testimony, stating ''we have the records of what actually took place, not only the state's records, and her records and the pharmacy records. And they contradict that.'' *Id.* at 5509. As was typically the case throughout his testimony, Faller's bark was stronger than his bite, as notwithstanding his statement, Respondents produced no such records.

While Faller's felony conviction does not render him incompetent to testify, there is ample reason to reject nearly all (if not all) of his testimony as incredible. According to Faller, his legal troubles which led to the federal convictions began back in 1993, when he had ''blown the whistle'' on his boss, who was purportedly stealing from various people to fund the PKK, a terrorist organization, and that his boss was doing this ''on behalf of the United States Government.'' *Id.* at 5519. Faller claimed that following this, threats were made on the lives of his attorneys; that he was falsely incarcerated; that shortly before he was indicted on the money laundering and fraud charges, an FBI agent had ''contacted my attorneys and I [sic] * * * and said [that] if I wouldn't shut up and go away, if I wouldn't pay him money he would destroy my life.'' *Id.* at 5521. According to Faller, following this, the FBI ''had [his] car stolen in Europe''; caused his daughter to be ''sexually assaulted,'' by tampering with a custody dispute he had with his ex-wife, *id.* at 5523 & 5540; ''threatened to rape and murder my wife and cut the baby out of her stomach,'' *id.* at 5523; then ''were going to try to shoot'' him; and tried to kill his attorney and her husband by running them off the road. *Id.* at 5526–27.

Faller also alleged that upon moving to Russell Springs in April 2001 to run a call center, he developed new legal troubles because both the Police Chief and the Commonwealth Attorney ''wanted me out because we were knocking down * * * drug problems'' by ''start[ing] mandatory drug testing for all the employees.'' *Id.* at 5011. Faller then claimed that the Police Chief and Commonwealth Attorney had interfered with his efforts to address Russell Spring's drug problem because the Police Chief was ''a part of it.'' *Id.* at 5569. As for why the Commonwealth Attorney also ''wanted [him] out,'' Faller stated this was because he had ''raised so much cane all across the board'' with the Commonwealth Attorney, *id.,* even though he had only recently moved to Russell Springs.

Faller further testified he had filed a lawsuit alleging public corruption against the Police Chief, the State Police Detective who investigated the Respondents, and other officials of Russell Springs, and ''got the grand jury fired up,'' but that the grand jury ''actually had convicted drug dealers on'' it and that ''[i]t was incredible what they did to tamper with'' it. *Id.* at 5570. He then claimed that ''there would have been indictments,'' but that the State of Kentucky moved to stop them by bringing in a KBI [Kentucky Bureau of Investigation] Agent (Agent Dudinsky), who had assisted in executing the 2007 state search warrants at Respondents; he also claimed that ''[t]hey immediately removed the foreperson of the grand jury'' and replaced him/her with DB, who he alleged was a drug dealer associated with the Police Chief. Faller asserted that the Police Chief and the KBI agent ''were using a cell phone to eavesdrop on the grand jury,'' *id.* at 5574, and that he was going to be held in contempt by the state judge, R. Cletus Maricle, who was supervising the grand jury, because he found this out, but that the FBI arrested Judge Maricle and charged the Judge with various crimes of which he was eventually convicted. *Id.*

However, a report issued by the Grand Jury states that it believed that the KBI Agent ''ha[d] very efficiently carried out our instructions in investigating the matter we have asked him to investigate,'' that he had provided ''able assistance,'' and that he ''ha[d] been unfairly vilified for simply doing his job.'' GX 85, at 2–3. The Grand Jury further stated that the original foreperson ''was excused due to illness.'' *Id.* Moreover, the Grand Jury report was signed by its foreperson, whose name was not DB. *Id.* at 3. Apparently the Grand Jury did not return any indictments as, in Faller's words, ''[i]t was another one of these whitewashing grand juries.'' Tr. 5104. Faller further claimed that he had been asked by the FBI and U.S. Attorney to prepare ''an aid in sentencing Judge Maricle, which [he] did,'' (which seems rather strange given his past history with the FBI) and that he said ''in the sentencing memorandum'' that Judge Maricle ''was involved in the same exact conduct in Russell County to protect Chief Irvin'' as the conduct which led to his conviction. Tr. 5577.

Faller asserted the existence of still other conspiratorial acts on the part of various governmental entities. These included the Kentucky Attorney General, who ''somehow managed to get the Department of Defense * * * to ask Express Scripts to cut off Grider Drug and all insurance carriers,'' Tr. 5456; that during the 2007 search, KBI Agent Dudinsky had planted drugs in Leon Grider's office, which Faller purportedly based on a videotape he viewed but which was not presented at the hearing, *id.* at 5448–53; and then the IRS, which had recently searched Faller's home (for reasons unclear on the record), and which, following the search, ''accidentally turned over'' files that Faller had been working on for the Griders which Faller alleged had been stolen during a break-in of his home ''years ago.'' *Id.* at 5436–38.

It is further noted that much of Faller's testimony, which went on for nearly three days, was plainly irrelevant, and even when he testified regarding one of the Government's allegations, it was typically clear that he lacked personal knowledge of the allegation. *See* Tr. 5018 (Faller's testimony that he was first contacted by Leon Grider in April 2006). The ALJ ultimately ignored nearly all (but not all) of Faller's testimony, which was typically provided in a rambling narrative even when questioned by Respondents' counsel (notwithstanding the Government's objections and the ALJ's instructions), and did not even address whether she found it credible. It is perplexing that the ALJ did not exercise more control over Faller's typically irrelevant and ludicrous testimony.

[17] In his affidavit, the supervisory DI also stated that a review of the prescriptions (which was completed by November 1, 2004) issued at Grider Drug #2 and seized during the August 2004 search showed ''sixteen (16) instances of refilling a schedule III–V controlled substances [sic] prescription without authorization in violation of 21 U.S.C. 829(b) and 21 CFR 1306.21 and 1306.22.'' GX 9, at 16. These provisions require that any controlled substance, which is a prescription drug, may only be dispensed pursuant to a prescription and that ''[s]uch prescriptions may not be filled or refilled more than six months after the date thereof or be refilled more than five times after the date of the prescription unless renewed by the practitioner.'' *See* 21 U.S.C. 829(b).

Noting the above statement, Government Counsel then asked the supervisory DI: ''With regard to this particular paragraph, during the course of your investigation did you come across a physician by the name of Robert Shipp.'' Tr. 436. The DI answered ''[y]es,'' and then explained that ''[i]n July of 2004, Dr. Shipp surrendered his DEA registration to us as a result of an investigation that we conducted of his medical clinic in Columbia, Kentucky, which is about a 30 minute drive from Russell Springs.'' *Id.* at 437. According to the DI,

Allegation Three—Respondents Filled Prescriptions Bearing Invalid or Expired DEA Numbers

Next, the Government alleged that Respondent filled numerous prescriptions that bore invalid or expired DEA numbers. While the Government submitted copies of various prescriptions which Respondent filled, *see* GXs 23 & 26; it produced no evidence that any of the DEA numbers on the prescriptions themselves were either expired or invalid. Rather, the Government's proof was based on KASPER reports submitted by Respondents which listed DEA numbers which differed from those on the actual prescriptions. *See id; see also* GX 9; Tr. 316, 321. Here again, the Government relied on inadmissible evidence to prove the violations. Accordingly, the allegation is not supported by substantial evidence.

There is, however, evidence that Respondents violated DEA regulations because, in some instances, the labels they affixed to prescriptions contained the wrong physician's name. *See* GX 26, at 1–2; 7–8; 9–10.

Allegation Four—Grider #1 Refilled Prescriptions More Than Six Months After the Date of the Original Prescription

In support of this allegation, the DI asserted that on four occasions between January 2003 and August 2004, Grider filled schedule III and IV controlled substance prescriptions that had been issued more than six months earlier. GX 9, at 14. With respect to Grider #1, the Government's proof was limited to the bare assertion by the DI that he had ''reviewed prescriptions seized from Grider #1, and compared and contrasted these prescriptions with prescription logs, transfer records, and KASPER reports.'' [18] *Id.* No further evidence was offered specifically identifying the prescriptions, their date of issuance, and the date on which they were refilled. Moreover, here again, it appears that this allegation was based on KASPER data.

The Government did submit an exhibit which purports to show that Grider Key Village engaged in the same practice. GX 24. Although this allegation is properly considered given the common ownership of the three pharmacies, the documentary evidence, which includes four prescriptions and four labels for refills, does not support the allegation as the dates of the refills are all well within six months of the date of the original prescriptions. *See id.* And while the exhibit contains various handwritten comments asserting that refills occurred more than six months after the original prescription was issued (two were allegedly refilled one day late), when asked by the ALJ what was the source of the information as to the refill dates, the DI testified that it came from the KASPER report. Tr. 308. Here again, the Government's reliance on inadmissible KASPER data precludes a finding that the allegation is supported by substantial evidence.

Allegations Five and Ten—Grider #1 and Grider #2 Engaged In the Unauthorized Transfer of Prescriptions and Refills To and From Grider Key Village, as Well as To and From Each Other

In his affidavit, the supervisory DI stated that his review of Grider #1's ''prescription logs, transfer records, and KASPER reports'' showed that there were 289 ''instances of unauthorized transfer of controlled substances [sic] prescriptions and/or prescription refills from Grider Drug-Key Village to Grider Drug #1,'' and 453 ''instances of unauthorized transfer of controlled substances [sic] prescriptions and/or prescription refills from Grider Drug #2 to Grider Drug #1.'' GX 9, at 14. The supervisory DI further testified that during the August 2004 search of the pharmacies, one of his investigators relayed information to him regarding the existence of logbooks listing prescriptions which were transferred between the pharmacies. Tr. 695–96. The supervisory DI testified that ''[t]here were two logs,'' which were provided to DEA by either Mr. Grider or another employee, and which bore on their cover, the titles of either ''Grider-Key Village transfers or Grider Drug #2 transfers.'' *Id.* at 696–97.

The DI further testified that the logs contained ''the date and the prescription that was being or had been courtesy filled.'' *Id.* at 697. Explaining the term ''courtesy fill,'' the DI gave the example of where ''the prescription was originally brought * * * to Grider #2, but for some reason or other it was * * * actually filled at Grider #1, but the records and the distribution of that filling, when you look at the KASPER and you get the actual prescriptions, is at Grider Drug #2.'' *Id.* The DI subsequently testified that the only information in the log was ''the date and the prescription number,'' and acknowledged that he determined that the prescriptions had been filled at the other pharmacy by looking at KASPER data. *Id.* at 699. However, the DI then explained that pharmacy's employees had told the Investigators that the log was used to list prescriptions that were actually filled by other pharmacies. *Id.*

The DI then added that this was not permitted under the law because while ''you can transfer a prescription from one pharmacy to the other * * * once you transfer that prescription, you can't transfer that prescription back.'' *Id.* at 701. Continuing, the DI explained that this ''is a violation'' of regulations requiring the pharmacy ''to maintain complete and accurate records of receipt and distribution'' and that this is ''what causes the skewage'' in ''the audit figures'' with one pharmacy being short of a drug and the other pharmacy having an overage.[19] *Id.* at 701–02.

Allegation Six—KASPER Data Shows That Grider #1 Filled Nine Schedule III—V Prescriptions for Which It Could Not Produce the Actual Prescriptions

On its face, proof of this allegation requires KASPER data for which the Government did not obtain the required court order. Accordingly, the allegation is not supported by substantial evidence.

Allegation Seven—Grider #1 and Grider #2 Failed to Take and Maintain a Biennial Inventory, as Required by 21 CFR 1304.11(c)

As evidence of this violation, the Government submitted the DI's affidavit. GX 9. Therein, the DI stated that he ''developed further information

''[t]he case was well publicized'' and that ''Dr. Shipp is very well known, or was very well known in the area.'' *Id.* The DI then explained that in July 2008, he had obtained a further KASPER report on the Respondents for the period of January 1, 2005 through July 7, 2008, and found that several prescriptions had been dispensed by Grider #2 under the registration number of Dr. Shipp after he had surrendered his registration. GX 18.

When the Government moved for the admission of the KASPER report (GX 18), the Respondent objected to the admission of this exhibit both because it was a KASPER report and on grounds of relevancy. Tr. 440. However, the ALJ admitted the exhibit. Even if this evidence was relevant to prove the allegation (which does not appear to have been made in either the Show Cause Order or the Government's various pre-hearing statements), here again, the Government's proof of the dispensings was based solely on an inadmissible KASPER report. The allegation is therefore not supported by substantial evidence.

[18] This statement was made in support of six different allegations which the DI raised in his affidavit. *See* GX 9, at 14.

[19] This allegation might well have been proved without introducing KASPER data (given the testimony that pharmacy employees had stated what the logs documented). However, the Government did not introduce the logbooks into the record and thus there is a lack of evidence to substantiate the number of instances in which the prescriptions were transferred.

during the execution of the * * * search warrants [on August 19, 2004] that each of the three Grider Drug locations failed to take and complete a biennial inventory as required by 21 U.S.C. 827(a) and 21 CFR 1301.11(c).'' [20] *Id.* at 13.

However, less than a month after executing his affidavit, the DI testified that he had done an audit of the three pharmacies' handling of certain drugs. Tr. 606–13. Contradicting the statement in his affidavit, the DI testified that in performing the audit, he had used Grider #1's and Grider #2's biennial inventories of May 31, 2003 as the initial inventories, and that there was no biennial inventory for Grider Drug—Key Village, ''because it wasn't required for them at that time.'' Tr. 609. Given the DI's testimony at the hearing, this allegation is not supported by substantial evidence.

Allegation Eight—The Accountability Audits

The Government further alleged that it had performed an audit of 50 controlled substances for the period May 31, 2003 through August 19, 2004 and that the audit ''revealed a shortage of 22,219 dosage units of controlled substances'' at Grider Drug #1 and ''105,913 dosage units of controlled substances'' at Grider Drug #2. ALJ Ex. 1, at 2–3. The evidence shows that this audit was done by a DI [21] who was a recent graduate of the Basic Diversion Investigators Course, and who told her supervisor that she ''did not have the experience'' and ''really was unsure [of] what [she] would be doing.'' Tr. 2863. According to the supervisory DI, the DI's audit was flawed because it included both invoices for Respondents' purchases and some distributions which occurred outside of the audit period. *Id.* at 607–08.

The Government did not, however, introduce this audit into evidence. Rather, it relied on a separate audit of three drugs (Xanax, alprazolam (the generic for Xanax), and methadone) which was done by the supervisory DI. GX 11. According to the DI, this audit found numerous shortages and overages, some of which would be significant if the audit was accurate. *See, e.g., id.* (finding shortages of 5,842 and 5,225 dosage units of alprazolam .5mg and 1mg respectively at Grider Drug #1 and 3,271 and 8,900 dosage units of same drugs at Grider #2, and a shortage of 3,562 and 2,786 dosage units of methadone 5 and 10mg respectively at Grider #2). However, in doing his audit, the DI used KASPER information to determine the distributions by each Respondent. Tr. 617–19. The DI did not verify the totals provided by KASPER against the individual patient information he had also obtained from KASPER. *Id.* at 619. Most significantly, in determining the quantity of the drugs that Respondents distributed, the DI did not use the pharmacies' dispensing records, even though they were required to maintain these records under the CSA and DEA regulations. *See* 21 U.S.C. 827(a)(3); 21 CFR 1304.22(c). Moreover, on cross-examination, the DI acknowledged that he had ''no idea how accurate'' the KASPER data was. Tr. 622.

Respondents put on extensive evidence challenging the DEA audits. More specifically, the evidence shows that shortly after DEA executed the August 19, 2004 search warrant, Respondents hired an entity (McDonald Group) to conduct inventories at each store on August 28, 2004. Tr. 1987–88. Respondents also hired Stivers and Associates, an accounting firm, to review the DEA audit results. Tr. 1980. David W. Hicks, CPA, who has been Stiver's Auditing Director for the past twelve years and has nearly twenty years of professional auditing experience, RX 101, at 1–2, conducted what he termed a ''consultation examination'' of Respondents. *Id.* at 3; Tr. 2009. According to Mr. Hicks, ''[a]n audit differs from our consultation examination in that our consultation examination focuses directly in one specific area and tests at 100% with available information, whereas an audit provides only reasonable assurance and sample tests available information to provide an opinion on the reliability of the information.'' RX 101, at 3; Tr. 2010.

In its report, Stivers detailed the procedures it used in conducting its examination. *Id.* at 62. For the beginning or initial inventory, Stivers used the same May 31, 2003 inventories taken by Grider #1 and #2 as DEA did in doing its audits. To determine Respondents' purchases of controlled substances, Stivers received reports directly from Respondents' suppliers and compiled a schedule for each store which tabulated the quantity purchased by drug name and strength. *Id.* at 62. In obtaining this information, Stivers also obtained credit memos for Respondents' returns of drugs to their suppliers. *Id.* Stivers then added the purchases and subtracted the returns to the initial inventory figures to determine the total amount for which Respondents were accountable (Total Accountable For). *Id.*

To determine the amount of drugs Respondents could account for (Total Accounted For), Stivers used the inventories conducted on August 28, 2004 by the McDonald Group. *Id.* at 63. With respect to outdated/expired drugs, Stivers explained that they were set aside in a separate bin apart from the pharmacies' stock until they could be disposed of, and that on September 2, 2006, Stivers inventoried the drugs that had expired prior to August 28, 2004, when the McDonald Group performed its inventory. *Id.* Mr. Hicks maintained that these drugs ''would have been removed from [the] current inventory prior to the McDonald Group's inventory'' and were thus not included in the August 28, 2004 counts. *Id.* Stivers counted a total of 2,414 dosage units of expired drugs. Tr. 2043.

As for Respondents' dispensings, Stivers tabulated the quantities for each drug ''for each location from the PC V computer software system Narcotic and Controlled Substance Drug Sales Report,'' obtaining monthly reports for the audit period for each of the fifty drugs that were initially audited by DEA. RX 101, at 63. Stivers totaled the monthly quantities for each drug to determine the total number of dosage units sold during the audit period. *Id.* Stivers then added the August 28, 2004 inventories, the outdated drugs, and Respondents' sales to determine the ''Total Accounted For'' for each drug. *Id.*

While Stivers' results demonstrate that both DEA audits were flawed (largely because the DIs used KASPER data to determine the amounts of the dispensings), they provide little comfort to Respondent because they point to massive accountability problems at each of the pharmacies. For example, at Grider #1, Stivers found that the pharmacy had the following shortages (by number of dosage units): (1) Alprazolam, 2,316; (2) Ambien, 170; (3) diazepam, 6,372; (4) Duragesic, 462; (5) Endocet, 214; (6) hydrocodone, 28,097; (7) lorazepam, 2,191; (8) Lorcet, 500; (9) Lortab, 375; (10) Valium, 40; and (11) Vicodin, 200. *Id.* at 14. Stivers also found that Grider #1 had overages in the following drugs: (1) Clonazepam, 7,568; (2) methadone, 3,025; (3) oxycodone, 1,335; (4) OxyContin, 262; (5) phentermine, 1,751; and (6) Stagesic, 514. *Id.*

At Grider #2, Stivers found that the pharmacy had the following shortages: (1) Ambien, 428; (2) Duragesic, 290; (3) hydrocodone, 8,135; (4) lorazepam, 1,253; (5) methadone, 3,207; (6) oxycodone, 1,240; (7) OxyContin,

[20] The Show Cause Order had also alleged that Grider Drug—Key Village did not take and maintain a biennial inventory. ALJ Ex. 1, at 4.

[21] To make clear, this DI did not take the closing inventories; these were done by inspectors from Kentucky Drug Control and Kentucky Board of Pharmacy. Tr. 608.

17,875; (8) phentermine, 3,203; and (9) Stagesic, 2,013. *Id.* In addition, Stivers found that Grider #2 had the following overages: (1) Clonazepam, 3,979; (2) diazepam, 2,787; (3) Endocet, 425; (4) Lorcet, 619; (5) Lortab, 342; (6) Valium, 662; and (7) Vicodin, 109. *Id.*

Moreover, even after Stivers took the figures for all three pharmacies (including Grider Key Village) to determine the combined shortages and overages, there were still substantial shortages and overages of various drugs (all figures in d.u.). The combined shortages included: (1) Alprazolam, 1,496; (2) diazepam, 7,329; (3) Duragesic, 605; (4) hydrocodone, 35,418; (5) lorazepam, 4,928; (6) OxyContin, 16,998; (7) phentermine, 2,791; and (8) Stagesic, 717. *Id.* The combined overages included: (1) Clonazepam, 31,951; (2) Endocet, 871; (3) Lorcet, 1,051; (4) Lortab, 889; (5) methadone, 15,747; (6) oxycodone, 900; and (7) Valium, 872. *Id.*

Regarding the results of his examination, Mr. Hicks testified that when all the drugs for the three stores were added up, Respondents only failed to account for an overage of 644 pills. *Id.;* Tr. 2035. He then asserted that this result is ''so minute, it's just totally immaterial.'' Tr. 2035.

This conclusion is properly characterized as ''fuzzy math,'' as contrary to Mr. Hicks' understanding, the various controlled substances which a DEA registrant handles are not fungible. Rather, pursuant to the CSA and DEA regulations, a registrant which dispenses is required to maintain ''a complete and accurate record *of each such substance* * * * received, sold, delivered, or otherwise disposed of by'' it. 21 U.S.C. 827(a)(3) (emphasis added); 21 CFR 1304.21(a). This means that each drug (including a generic (alprazolam) v. a legend drug (Xanax)), must be separately accounted for. Moreover, ''[s]eparate records shall be maintained by a registrant for each registered location.'' 21 CFR 1304.21(a). As Mr. Hicks' examination demonstrated, both Grider #1 and Grider #2 had numerous material shortages and overages of the controlled substances they handled.[22]

Allegation Nine—Grider Drug #1 Filled Four Controlled Substance Prescriptions Which Listed Grider Drug #2 as the Issuing Physician and Grider Drug #2 Listed Itself as Issuing Physician On Several Schedule II Controlled Substance Prescriptions

In support of this allegation, the Government offered the testimony and affidavit of the supervisory DI. *See* GX 9, at 3–11. The Government did not enter into evidence any of the prescriptions which the DI asserted listed Respondents as the prescribing physician, and the DI's affidavit makes clear that the evidentiary basis for this allegation is the data contained in KASPER reports the DI obtained on Respondents. *See id.* Because the Government produced no evidence other than the inadmissible KASPER data to prove the allegation, it is not supported by substantial evidence.

Allegation Eleven—Respondent[s] Filled Prescriptions Issued by a Tennessee Mid-Level Practitioner in Violation of Kentucky Law

In support of this allegation (which was raised in the Government's pre-hearing statement), the supervisory DI stated in his affidavit that the Louisville District Office ''Diversion Unit completed a * * * review of prescriptions seized on August 18, 2004 from Grider Drug #2,'' and that ''the review of these prescriptions revealed * * * [t]welve (12) instances of filling prescriptions issued by a Mid-Level Practitioner licensed in Tennessee, who is not authorized to prescribe controlled substances in Kentucky in violation of 21 U.S.C. 829(b) and 21 U.S.C. 842(a)(1) and [KRS §] 314.011(8) and [§] 314.042.'' GX 9, at 16. Yet, when asked at the hearing to ''elaborate further'' on this assertion, the supervisory DI testified that ''[i]n conducting my review of the KASPER reports and of course running the DEA numbers through our system and trying to identify the prescribers, I came upon the fact that—I identified 12 prescriptions that were being filled for a nurse practitioner out of Tennessee.'' Tr. 200–01; *see also* GX 9, at 7–11 (listing KASPER data for Grider #2 including prescriptions issued by a ''TN MLP''). The DI then explained that at the time the prescriptions were filled, nurse practitioners were not authorized to prescribe drugs in Kentucky and thus the pharmacy should not have filled the prescriptions. Tr. 201.

The Government offered no further evidence establishing the identity of the prescriber and his/her licensing status. Nor, notwithstanding the DI's statement in his affidavit that he had reviewed the prescriptions, did the Government introduce into evidence the prescriptions, the pharmacy's dispensing log, or copies of the labels for the dispensed prescriptions. Indeed, given the DI's testimony at the hearing, it is unclear whether the DI based this allegation on anything other than the KASPER data. I therefore conclude that this allegation is not supported by substantial evidence.

Allegation Twelve—Respondents Failed to Report All Thefts of Controlled Substances to DEA

The Government put forward evidence that numerous break-ins and thefts had occurred at the Respondents and that several of them were not reported to DEA as required by federal regulations. According to the supervisory DI, he received information from Narcotics Detective with the Kentucky State Police (Scott Hammond) and the Police Chief of Russell Springs (Joe Michael Irvin), who alleged that Leon Grider was trading controlled substances for sex and ''hiding * * * the distribution[s] by reporting theft and losses for the pharmacy.'' Tr. 160. In addition to the theft and loss reports which he obtained from the Police Chief and the State Pharmacy Board, the DI also obtained from the Russell Springs Police Department a chronology of the various break-ins which had occurred at Respondents.[23] *Id.* at 162–63; *see also* GX 32.

The Government introduced into evidence an exhibit which contains sixteen police reports[24] documenting the various incidents; also included in this exhibit were a number of DEA Form 106s, a form which a registrant is required to submit to report the theft of controlled substances. *See* 21 CFR

[22] For reasons explained in my discussion of the public interest factors, I reject Respondents' exception that the Stivers' audit was not accurate and reliable as to the overages and shortages. While I conclude that the DEA audits were inaccurate, I am not required to ignore other reliable evidence in the record.

[23] It does not appear that the Government provided adequate notice of its intent to litigate this allegation in either the Show Cause Order or the Pre-Hearing Statements. However, Respondents did not object that the allegation was beyond the scope of the proceeding and that they were denied adequate notice of it. Moreover, Respondent fully litigated the issue. As judicial decisions make clear, even where the Government fails to provide notice of an allegation in the Show Cause Order or Pre-Hearing Statements, the parties, in the absence of objection, can be deemed to have litigated the allegation by consent where the parties fully litigate the issue. *See Citizens State Bank* v. *FDIC,* 751 F.2d 209, 213 (8th Cir. 1984) (citing *Kuhn* v. *Civil Aeronautics Bd.,* 183 F.2d 839, 841–42 (D.C. Cir. 1950)); *Yellow Freight System, Inc.,* v. *Martin,* 954 F.2d 353, 358 (6th Cir. 1992).

[24] While the cover of GX 33—Tab E states that it includes a report for a February 22, 2002 break-in at Grider Drug #2, the tab actually includes reports for both this break-in and a second incident, which occurred later that morning at Grider #1; however, the report for Grider #1 stated that while the store's window had been broken with a large rock, no entry was made. GX 33, Tab E, at 5.

1301.76. However, there was not an accompanying DEA Form 106 for each incident for which the police filed a report and the DI testified that on comparing the theft and loss reports which DEA had received from Respondents with the police reports, he determined that Respondents had not filed reports with DEA for some of the incidents. Tr. 169. More specifically, there were four instances in which a theft of controlled substances occurred at one of the Respondent's locations which was not also reported to DEA. *See* GX 33, at Tab E (Feb. 22, 2002 theft from Grider #2); *id.* at Tab L (Oct. 28, 2003 theft from Grider #1); *id.* at Tab M (November 2, 2003 theft from Grider #2); *id.* at Tab N (November 3, 2003 theft from Grider #2).[25]

Allegation Thirteen—Respondents' Owner, Leon Grider, Unlawfully Distributed Controlled Substances

In the initial Order to Show Cause, the Government alleged that in August 2005, Leon Grider had been indicted in both the Russell County and Adair County Circuit Courts on state felony charges of trafficking in controlled substances. ALJ Ex. 1, at 4. The Show Cause Order further alleged that Leon Grider had also been indicted in Russell County on charges of bribing a witness. *Id.* In its initial pre-hearing statement, the Government provided further notice that it intended to elicit testimony from Scott Hammond, a narcotics detective with the Kentucky State Police, regarding ''illicit distributions of controlled substances from'' the Respondent and various ''undercover operations.'' Gov. Pre-Hearing Statement, at 7.

As part of its case-in-chief, the Government called Detective Hammond who testified regarding the decision to initiate undercover operations and the undertaking of the operations in the investigation of Respondents. The ALJ found Detective Hammond's testimony credible.[26] ALJ 56 at nn.22 & 23. In addition, as part of its rebuttal case, the Government called LW, who had acted as a confidential informant and who obtained controlled substances from Leon Grider on various occasions without a prescription. Notwithstanding the determined efforts of Respondents' counsel to destroy the credibility of the Detective and LW, the ALJ found their testimony credible as do I. ALJ at 56 n.52.

According to the Detective, sometime in May or June 2003, SD, a female in her early to mid-twenties,[27] was arrested by the Russell Springs Police Department on a DUI charge; at the time of the arrest, PC was her passenger.[28] Tr. 1404. A day or so after their arrests, the Detective interviewed them and asked them where they got their drugs. *Id.* at 1404–5. While they were initially ''uncooperative,'' they told the Detective that they were getting drugs from Leon Grider without a prescription. *Id.* SD agreed to cooperate and told the Detective she would see Leon Grider after the pharmacy's closing, knock on the door, go in if the door was open, ask him for controlled substances, and that most of the time he gave them to her. *Id.* at 1406. When asked what she provided in return, SD denied paying for the drugs or providing stolen property to Leon Grider. *Id.* at 1407. However, when then asked if she had sex with him, SD would neither confirm nor deny doing so. *Id.* SD also admitted that she was addicted to drugs and had previously been arrested for possession of some unidentified drug. *Id.* at 1408.

SD agreed to attempt a controlled drug buy which both the Detective and

[25] Not proved by credible evidence was Respondents' far-fetched contentions that: (1) The Russell Springs Police Chief was actually behind the break-ins because he sold alarm systems on the side and Leon Grider refused to buy one from him, and/or (2) that the Russell Springs Police Chief was behind the break-ins because he was dealing the drugs that were stolen.

With respect to the latter contention, James Faller testified that he had been called by one Bobby Bunch, who ''said that he had burglarized Grider drugs'' and that when he was caught by the police, he had ''a whole lot more [pills] than what were turned into evidence,'' Tr. 5086, and that Bunch '' had agreed to testify about what had happened to him,'' but was murdered and no one has been charged with the crime because ''[i]t was another one of these whitewashing grand juries.'' *Id.* at 5103. No further evidence was offered to corroborate Faller's testimony regarding Bunch's purported statements regarding the disposition of the drugs the police seized from him, or even that Bunch had, in fact, been murdered.

Another of Faller's incoherent tales was that Leon Grider had received a call from a prisoner Brian Lawless (which Grider purportedly had on tape, but which was not produced at the hearing), who, according to Faller, had written a letter to the Commonwealth Attorney stating ''that Leon had left money for him that was paying him to break into these stores,'' and that this letter was used to get Leon Grider indicted. Tr. 5085–86. According to Faller, Lawless had stated that he wrote the letter because the Chief ''told [him] he was going to kill [his] little brother if I didn't write them.'' *Id.* While Respondents introduced a transcript of a sworn statement given by Kevin Lawless, Brian's brother, which Faller obtained in his pursuit of his public corruption claims, the only persons present were Mr. Lawless, Faller, and Grider. RX 13. Moreover, nothing in Kevin Lawless's statement corroborates Faller's contention that Brian Lawless made up his story. *Id.* Contrary to Faller's assertion that Brian Lawless's letter was used to procure Leon Grider's indictment, the record seems clear enough that the only indictments brought against Leon Grider were based on his having unlawfully trafficked in controlled substances to LW and PG and not on conduct related to the break-ins. GXs 44, 45.

[26] The Detective acknowledged that his mother had formerly worked as a cashier at Grider #2, and that she was either fired or quit on her own after the August 2004 DEA search in which the Detective assisted. Tr. 1389, 1540, 1617–18. In addition, the Detective testified that his wife's sister was married to Greg Grider, Leon Grider's oldest son. Tr. 1388.

In an attempt to impeach Detective Hammond's credibility, Mr. Faller asserted that Hammond had threatened to have LW's children murdered, that he had gotten her thrown out of her apartment, that PG (LW's former boyfriend) had told him that he had things he wanted to share but ''was afraid for his life,'' and that Hammond had ''start[ed] harassing me [Faller] and running witnesses off the road.'' Tr. 5098.

LW testified, however, that Detective Hammond had never threatened her. Tr. 5935. Moreover, while LW testified that Detective Hammond had moved her to a safe house, he had done so at her request. *Id.* at 6131.

Respondents introduced into evidence a transcription of an unsworn interview Faller conducted of PG, during which Faller made numerous suggestive statements to PG regarding the conduct of Hammond and Irvin. *See* RX 25, at 22 (p. 51,''my guess is, what happened is, they created a crime against you, too. That's my belief.''); *id.* (''I think they've threatened you ruthlessly. I think they're telling you you're going to come up with the testimony they want you to come up with. I think that they've . . . used the kids and the threat of the kids and everything else to try to force you to go along with this stuff. * * * And I think, quite frankly, you're scared to death. * * * In fact, the * * * scared to death part I'm sure of it, because I can see it. This isn't a guess * * * you know, it's nothing against you. It's clear to me you're scared to death.''). Subsequently, PG related a conversation during which Hammond and Irvin were attempting to recruit him and LW to work as informants PG said:

Leon's got enough money. If we done something like this to him, it wouldn't be no problem for him to have us took care of. And the statement was made to me not to worry about Leon, that we'd be more or less—I think their words were, they could help us or they could hurt us, make our life easier or make our life hell, and, more or less to watch what's I'm doing. And their exact words were, that they could take us out and nobody would ever find us was their exact words.

RX 25, at 32. Faller then asked, ''In other words, they'd kill you,'' to which PG said, ''uh-huh.'' *Id.* Faller then asked: That's the way you took it?'' *Id.* PG replied: ''That was their exact words, without saying, I'm going to kill you, but just, I'll take you out and nobody will ever find you. You don't have to worry about Leon.'' *Id.* Another participant in the interview then asked PG: ''They didn't use the words, I'll kill you, though?'' *Id.* PG responded: ''No. They said you don't have to worry about Leon killing you. We can take you out, nobody will ever find you. And he would, too.'' *Id.* Later, PG asserted that ''they did threaten us with Federal charges and to hurt the kids.'' *Id.*

Putting aside the ambiguity of PG's statement as to whether his life was threatened by either Hammond or Irvin, because both Detective Hammond and LW were placed under oath and were subject to cross-examination and the ALJ found them to be credible, I reject the unsworn hearsay statement of PG as inherently unreliable.

It is further noted that Respondents did not take exception to the ALJ's finding that Detective Hammond's testimony was credible. *See generally* Respondents Exceptions.

[27] The Detective described SD as having blond hair, brown eyes, and being ''probably five-four or five-five,'' and ''115 or 120 pounds.'' Tr. 1407.

[28] According to the Detective, he had first received information about SD and PC from an Investigator with the State Pharmacy Board and had discussed them with Chief Irvin of the Russell Springs Police Department. Tr. 1403.

the Police Chief (Joe Michael Irvin) observed; however, upon SD's going to Grider #1, the door was locked and she was unable to get in. *Id.* at 1409–10. After debriefing SD, who said that Grider would answer the door, the Detective went to SD's apartment complex to do surveillance (which was ''right down the road'' from Grider #1) and the Police Chief watched the back of Grider #1. *Id.* at 1410. Shortly after he arrived at SD's apartment complex, the Detective was called by the Chief and told that Grider had left the store and was carrying something. *Id.* The Detective returned to Grider #1, picked up the Chief, and the two observed Leon Grider go to his house, stay a few minutes and then leave. *Id.* at 1411–12. The Detective and Chief then watched Grider drive to a ''community called Salem,'' where he met up with a red Jeep that was behind a church. *Id.* at 1412. A woman got out of the Jeep and entered Grider's car. *Id.* at 1415. After fifteen minutes, Grider and the Jeep departed; the Detective and Chief followed the Jeep to a ''community called Eli'' and obtained its license plate number, which was traced to a female, PL. *Id.* at 1412.

Either the next day or the day after, the Detective and the Chief went to PL's residence and asked to speak with her. *Id.* at 1413. PL did not want to do so at her residence, but agreed to meet the officers at the Russell Springs Police Department, where she was interviewed. *Id.*

During her interview, PL admitted that Leon Grider had brought her both Xanax and hydrocodone, for which she did not have a prescription. *Id.* at 1414–15. When asked what she was doing in Grider's car, PL admitted to ''just messing around,'' but when asked to define what she meant, she stated ''let's just leave it at that. We were just messing around.'' *Id.* at 1415. While PL said that she also received methadone prescriptions from a physician, *id.*at 1418–19, she further stated that she had gotten controlled substances from Leon Grider both with and without a prescription, *id.* at 1416, and that when she had a prescription, she would ask for some extra. *Id.* at 1418.

PL agreed to act as a cooperating witness, and was approved by the Detective's supervisors; her background check did not reveal any felonies. *Id.* at 1416. On October 21, 2003, PL obtained a methadone prescription and met with the Detective on the outskirts of town, where she was searched, interviewed, had a transmitting/recording device placed on her, and was driven to Grider #1. *Id.* at 1419–20. PL entered the pharmacy, spoke with Leon Grider, and asked him to come out from behind the counter and into an aisle, where she gave him her methadone prescription and said that she ''need[ed] some Zs,'' street slang for Xanax. *Id.* at 1420–21.

Leon Grider did not say anything and went back behind the counter and filled PL's methadone prescription. *Id.* at 1420. PL left the pharmacy and had a smoke, while standing around its back entrance. *Id.* PL then re-entered the pharmacy and came back out with a white bag; PL was then picked up by the Detective, and after being searched, gave him the bag. *Id.* at 1420–21. Upon opening the bag, the Detective found a pill bottle containing methadone, as well as ''thirty orange, oval-shaped pills that were loose in the bottom of the bag.'' *Id.* at 1421. The Detective gave PL the methadone and placed the other pills in evidence bags, which he turned in to the Kentucky State Police; the orange pills were subsequently tested by the lab and determined to be Xanax. *Id.* at 1421–22. PL was debriefed and confirmed what the Detective heard through the transmitter; she was then allowed to leave. *Id.* Detective Hammond further testified that PL did not have a prescription for the Xanax. *Id.* at 1422. PL was used to obtain drugs only this one time. *Id.*

In either late November or early December 2003, the Detective received a phone call from SD, who stated that she had been at ''the Manor,'' a Government housing project in Russell Springs and had seen Leon Grider there. *Id.* at 1423. SD also stated that LW was receiving hydrocodone from Leon Grider. *Id.*

Upon receiving this information, the Detective interviewed LW, who initially denied that she received controlled substances from Leon Grider. *Id.* at 1424. However, LW then admitted ''that she was getting controlled substances from'' Grider. *Id.* During the interview, LW admitted that she had obtained hydrocodone, Xanax, and alprazolam from Leon Grider, both with and without a prescription; she also told the Detective that she believed she could get more drugs from him without a prescription. *Id.* LW, who was then in her early twenties,[29] denied trading either money or sex for the drugs. *Id.* at 1426.

While during the interview, LW agreed to perform undercover transactions for the Detective, sometime in December 2003, she then told Leon Grider about her having been contacted by the Detective, that the police knew what was going on, and that she was ''scared to death.'' *Id.* at 1427, 1435. Grider told her she ''needed to leave the county for a little while just to let them cool off of'' her.[30] *Id.* at 6019. LW then left town and would not ''answer her cell phone.'' *Id.* at 1426. However, eventually, the Detective regained contact with LW, who told him that she had gone to Leon Grider and told Grider that the state police knew what was going on. *Id.* at 1427, 1435. LW told the Detective that Grider ''gave her some money'' and ''an undetermined amount of hydrocodone and told her to leave.'' *Id.* at 1435. LW told the Detective that she had gone to Bowling Green and Somerset, Kentucky with PG, her boyfriend. *Id.*

The Detective developed additional information showing that on six occasions beginning on December 19, 2003 and ending on January 14, 2004, Leon Grider wired a total of $2800 to PG through Western Union offices in Bowling Green and Somerset, Kentucky. *See* GX 46; Tr. 1490. In a second interview he conducted with LW in January 2004, she stated that Leon Grider ''told her to leave town and stay from us.'' *Id.* at 1489.

On some date not specified in the record, LW agreed again to work as a cooperating witness and was signed up to do so.[31] Tr. 1495. LW contacted Leon Grider and said she needed to see him; Grider told her to come to Grider #1 before it opened on February 24, 2004. *Id.* Before LW went to the store, she was searched, a recorder was placed on her, and she was given instructions. *Id.* The Detective followed LW and PG to the store; upon their arrival, LW, accompanied by PG, went inside and told Leon Grider that they were going to court and were ''short on their pills'' and were concerned that they would be subjected to a pill count.[32] *Id.* at 1495–96. Grider gave them 40 hydrocodone tablets and 40 alprazolam tablets in two pill bottles, which LW brought to the Detective. *Id.* at 1496. LW did not have a prescription for the drugs. *Id.* at 1497.

On June 4, 2004, LW performed undercover transactions in both the morning and either the afternoon or evening. *Id.* at 1499; 1513–14. In the morning, the Detective drove LW, who was wearing a recorder, to Grider #1. Tr. 1515. LW went into the store and obtained Lortab and alprazolam, which

[29] The Detective described LW as being ''five-two, blond hair, blue eyes, [and] 115 pounds the last time I saw her.'' Tr. 1426.

[30] According to LW, Leon Grider never told her not to become a CI. Tr. 6020.

[31] At one point, LW testified that she was in Bowling Green for six months. Tr. 6066–67. However, other evidence suggests that she was in Bowling Green for a considerably shorter period of time. Tr. 1496; GX 46.

[32] According to the Detective, PG accompanied LW on the undercover transaction. Tr. 1498–99.

Leon Grider placed loose in a brown bag; she then got back in the Detective's car and they left the scene. *Id.; see also id.* at 6033 (testimony of LW that ''I just went in and asked him [Leon] for some pills, and he gave them to me.''); *id.* (testimony of LW that she received Lortab and Xanax at first transaction); GX 48. Notably, the pills were not placed in a prescription bottle. Tr. 6033.

As for the second set of transactions, LW and PG lived together in a trailer in Adair County, the county next to Russell County. *Id.* at 1500. LW called Leon Grider and asked him to bring some methadone to her. *Id.* During a phone call, Leon Grider explained that he needed to go to Grider #2; in a subsequent phone call, Grider told LW that he would bring some methadone to her at her residence. *Id.* Another officer followed Leon Grider to within a short distance of LW's residence, with the detective being ''just around the corner'' from LW's residence. *Id.*

Upon his arrival, Leon Grider gave LW 60 alprazolam in an envelope and 100 dosage units of methadone, which were in a sealed ''distributor's bottle.'' *Id.* at 1501. After Grider left, the Detective entered the residence and obtained the controlled substances. *Id.* LW did not have a prescription for either drug. *Id.*

On April 24, 2005, a further undercover transaction occurred. On some date not clear on the record, LW and PG contacted the Detective and indicated that they could still obtain controlled substances from Leon Grider. Tr. 1507. The Detective (along with the Police Chief) met with LW and PG, who offered to call Leon Grider and seek more drugs from him; LW and PG stated that they believed that he would give them Duragesic (fentanyl) patches. *Id.*

On the date of the transaction, LW and PG were searched and recorders were placed on them. *Id.* At 3:49 p.m., LW called Leon Grider and left a voicemail message in which she asked to meet with him; a short while later, Leon Grider returned the call. GX 27. Because Leon was going to see his mother, he agreed to meet LW (and PG) at a church graveyard on the Adair and Russell County line; the Detective and Chief observed Leon Grider arrive at the graveyard and watched the transaction from the back side of the graveyard. *Id.* at 1507–08.

The Detective used a scanner to listen to the conversation between Leon Grider, LW, and PG, during which LW asked if she could get Duragesic patches from Leon Grider. *Id.* at 1508; GX 27. Leon Grider explained what strength the patches were and that he had to go back to town to get the patches, after which he would meet LW and PG at Houchens Supermarket in Key Village. GX 27, at 3–4. However, while driving back to town, Leon Grider observed the Detective and Police Chief and called LW and PG to tell them that they were being watched; however, he still told LW and PG to go to Houchens but that he was going stay at Grider #1 for fifteen to twenty minutes. *Id.* at 4. LW passed this information on to the Detective. *Id.* Grider then told LW and PG to go to the parking lot of Houchens. *Id.*

Leon Grider returned to Grider #1. *Id.* In the meantime, the Detective also told LW to call Leon and tell him that he and the Chief were no longer around; LW did so. *Id.* The Detective and Chief switched vehicles, drove to Key Village, and parked across the parking lot from Houchens. *Id.*

Upon arriving, Leon Grider entered the store and PG went in and met him. *Id.* at 1508–09. Following a conversation, Leon Grider gave PG twenty Duragesic patches and 88 alprazolam; PG did not have a prescription for either drug *Id.* at 1509; GX 27. After PG left the store, he (and LW) met the Detective and Chief who searched them and their car; the Detective also took possession of twenty Duragesic patches and 88 Xanax pills.[33] GX 27, at 2, 4. The CIs did not have prescriptions for the drugs. *Id.* at 2.

LW testified that while she initially had legitimate prescriptions for both Lortab and Xanax, she had heard from acquaintances that Leon Grider would provide extra pills and that she noticed that she would get extra pills in her prescriptions Tr. 5911, 5915. Eventually, LW started asking Leon Grider ''if there was any way possible'' he could ''double'' her prescriptions; Grider did so. *Id.* at 5916–17. LW testified that about a year to a year and a half later, she started getting 500–1000 Lortab 10mg a week in commercial-size containers,[34] and that this continued for a period of ''about two years.'' *Id.* at 5917, 5925. LW took 50 to 60 pills a day and also sold some of them. *Id.* at 5918. According to LW, Leon Grider expressed his attraction to her and asked if he could stay at her house; however, LW denied engaging in sexual activities with him. *Id.* at 5920. LW also stated that Leon Grider had given her his cell phone number so that she could reach him without calling the store. *Id.* at 5921.

Leon Grider also told LW that some of the commercial bottles that were labeled for hydrocodone actually had pinto beans in them and were marked with either a red line or a red X. *Id.* According to LW, Leon Grider did this in the event he was robbed. *Id.* at 5921–22. LW testified that Leon Grider never gave her a hydrocodone bottle which actually contained pinto beans rather than hydrocodone. *Id.* at 5922, 6039. LW also testified that Leon Grider had told her ''not to come in the store when [his wife, Anna Mae] was around'' and that Leon Grider would leave drugs for her outside of the store in the gutter of Grider #1.[35] *Id.* at 5923, 5926–27.

LW testified that sometime probably in 2004,[36] she asked Leon Grider for some pills and Grider told her to meet him at Grider Key Village. *Id.* at 5930–31. LW parked in front of the store, knocked on the door and was let in by Leon. *Id.* at 5931. Grider gave LW a bottle with 500 pills; however, before LW could leave, Anna Mae Grider pulled up in the front and entered the store. Leon told LW to leave out the back, but the rear door was locked; LW sat in a storage room but Anna Mae came to the room, found LW, and took the pills from her. *Id.* at 5931–32. LW then left the store. *Id.* at 5932.

The next day, LW called Leon and told him that she was ''starting to detox really bad'' and asked ''if there was any way possible [she] could get that bottle back.'' *Id.* Leon told LW to meet him later, and upon meeting at Grider #1, gave her two 500-count bottles. *Id.* at 5932–33.

Anna Mae Grider also testified regarding this incident. At the hearing, Mrs. Grider asserted that the bottle contained pinto beans, Tr. 4802, and that Leon had given it to LW, who ''was in there begging for pills,'' *id.* at 4803, ''[p]robably to get her off his neck.'' *Id.* at 4804. However, in a deposition she had previously given in a civil action, Mrs. Grider testified that the bottle contained hydrocodone, that the bottle was a white bottle and not a prescription vial, and that she did not give the bottle back to LW. GX 68, at 212–15. Given the inconsistency between Mrs. Grider's testimony at the hearing and at her earlier deposition as to the contents of the bottle, I find that her deposition testimony is more credible than her testimony at the hearing. I further find that Mrs. Grider's deposition testimony corroborates LW's

[33] It is acknowledged that there is a conflict in the evidence as to the number of patches. I conclude that the conflict is not material to the resolution of this matter.

[34] LW also testified that her physician eventually stopped prescribing to her. Tr. 5928.

[35] According to LW, the gutter was at her ''head-level,'' and standing ''flat-footed,'' she could reach into it with her hand. Tr. 6042.

[36] However, LW later testified that this incident occurred before she agreed to work as a confidential informant. Tr. 6037.

testimony regarding the Key Village incident.

LW further testified that neither Detective Hammond nor Chief Irvin threatened her or threatened to take her children away from her. Tr. 5935. She also testified that neither Detective Hammond nor Chief Irvin had ever engaged in inappropriate conduct towards her. *Id.* at 5953. She further testified that neither Detective Hammond nor Chief Irvin threatened PG. *Id.* at 5936.

LW also acknowledged that she had become addicted to drugs and that she was paid $150 to $300 for each undercover transaction. *Id.* at 6046. In addition, LW ''guessed'' that her addiction had caused ''a little bit of damage'' to her brain and had caused, in the words of Respondent's counsel, ''little problems with [her] recall sometimes.'' *Id.* at 6099–6100. She further noted that it had been six or seven years since the events to which she testified. *Id.* However, LW later testified that her past drug use had no effect on her recollection of her interactions with Leon Grider. *Id.* at 6124. As noted above, the ALJ generally found LW's testimony credible as do I.[37] *See also* ALJ at 84–85.

Regarding her decision to leave Russell County upon being approached by Detective Hammond and Chief Irvin, LW testified that Leon Grider gave her $1000 and three 500-count bottles of hydrocodone and told her that she ''needed to leave town'' and ''to let them slack off of me for a while.'' *Id.* at 5939; *see also id.* at 5941–42. She also testified that when she and PG were staying in Bowling Green, Leon wired the money in PG's name because ''it would look better.'' *Id.* at 5942–43.

LW testified that in 2004, she had asked for and received a bottle of 100 methadone from Leon Grider without having a prescription. *Id.* at 5939–40. LW also testified that after she had stopped talking to Leon Grider ''as much'' and was coming off of methadone, she obtained four Suboxones from him to help her ''from detoxing.'' *Id.* at 5946. LW testified that she eventually had a seizure and woke up in an ambulance on her way to the hospital. *Id.* at 5946–47. LW further testified that she had received about twenty-five morphine[38] patches worth about $2,500 to $3,500, as well as 98 OxyContin tablets, from Leon Grider. *Id.* at 5948, 6096. Regarding her obtaining of the morphine patches, LW testified that she told Leon Grider that she needed money and was going to sell them. *Id.* at 6092.

As for the 98 OxyContin tablets, LW testified that she obtained this drug from Leon Grider before she agreed to work as a confidential informant and that she needed the drug for her addiction because she was concerned about the number of Lortab tablets she was taking and the effect of the Tylenol (acetaminophen, which is combined with hydrocodone in Lortab) on her liver. *Id.* at 6095–96. LW testified that she consumed the OxyContin in five days but did not ask Leon Grider for more because she did not think that he would provide the drug to her again. *Id.* at 6097. LW also testified that after she ''didn't have a prescription anymore,'' Leon Grider created false prescription labels so she would not ''get caught'' with the drugs if she was stopped by the police.[39] *Id.* at 6126.

In addition to the incidents involving PL and LW, the record contains substantial evidence that Leon Grider distributed controlled substances to BL without a prescription. More specifically, JD, who is BL's daughter, testified that her mother sold Suboxone (buprenorphine and naxalone) and Klonopin (clonazepam), which she obtained through prescriptions, the majority of which she filled at Grider #1. *Id.* at 3139. JD admitted that she participated in the transactions, which took place at her mother's house, by handing the drugs over to the buyer and obtaining the money. *Id.* at 3139–40. JD further testified that her mother had obtained Lortab 7.5 and Klonopin from Leon Grider without a prescription, and that while her mother initially had a prescription for the Klonopin, she had run out and yet Grider had gone to BL's house and given her more of the drug using ''the same label of the original prescription.'' *Id.* at 3142. Moreover, while JD was not present at her mother's house when Leon Grider delivered the drugs, she ''saw the medication that [her mother] didn't have a prescription for.'' *Id.* at 3173.

JD also testified that on March 15, 2006, she had spoken with Chief Irvin regarding her mother's ''slurring speech, stumbling, drunken behavior, [and] drug behavior.'' *Id.* at 3144. JD further testified that she ''had found two bottles with the same date and [that] there was another bottle of Klonopin that had been duplicated'' and that she reported this to Chief Irvin. *Id.* According to Irvin, he then met with JD who told him that Leon Grider had provided her mother with ''pills that she wasn't supposed to be getting'' when she was hospitalized. *Id.* at 3201. JD also told Irvin ''this was being done * * * with multiple pill bottles with duplicat[e] labels.'' *Id.* Irvin then told JD, who ''claimed to have'' the bottles, that if she gave them to him, he would see what he could do. *Id.* Later that day, JD called Irvin and asked to meet again; Irvin agreed and during the meeting, JD gave him the pill bottles. *Id.*

[37] Respondents took exception to the ALJ's finding that LW was credible, noting her testimony as to her drug addiction and its effect on her memory, her having admitted to selling controlled substances, as well as the incentives she had to lie about her work (such as the money she was paid for her work as a confidential informant and that she was still at risk for criminal prosecution because under Kentucky law, there is no statute of limitations for felonies). Resp. Exceptions at 11–12.

However, LW's testimony was corroborated in large part by Detective Hammond and her testimony was internally consistent. Moreover, having personally observed LW's testimony, the ALJ's finding is entitled to deference. *See Universal Camera Corp.* v. *NLRB,* 340 U.S. 474, 496 (1951).

[38] LW testified that the patches were turned over to Detective Hammond and Chief Irvin. Thus, I find that this is actually the incident in which Leon Grider provided the Duragesic patches to LW. Duragesic patches actually contain fentanyl, a drug which is considerably more powerful than morphine. However, both drugs are schedule II narcotic controlled substances. *See* 21 CFR 1308.12(b) & (c).

[39] In his testimony, Faller alleged that various recordings that were made of the undercover transactions had been tampered with. Tr. 5045–64. However, Faller's testimony was (as was typical) confused and incoherent.

It is further acknowledged that Respondents submitted several affidavits of an individual who maintained that he is a Forensic Audio and Video Examiner, which were prepared for other litigation between Leon Grider and the Commonwealth and Chief Irvin. Therein, the affiant asserts that various tapes were either copies, have erasures, or were edited. RX 28. While in an affidavit (dated October 2, 2007), Respondent's Expert made reference to tapes which appear to be of the various undercover transactions engaged in by LW, even here, the affidavits fall short of establishing that any of the original tapes were altered. *See id.* at 9 (''Q–4 is a 'copy' of a video tape (not the original) of a scene behind a commercial location where an alleged transaction took place.''); (''Q–5 has been identified as a 'copy' (not the original) of a video tape with a portion of the tape as a tape over edit. I will need the original tape and proper recorder to properly determine the extent and content of the edits. (This video tape is of some sort of surveillance at a cemetery.)''). Notwithstanding that the record in this proceeding did not close for another three years, Respondents produced no credible evidence that the original recordings of these transactions had been tampered with.

Most significantly, the Government did not introduce the tapes into evidence. Nor was the Government required to as the testimony of Detective Hammond and LW, which the ALJ found to be credible, is substantial evidence that Leon Grider distributed controlled substances to LW, even though she did not have a prescription for the drugs. I thus reject Respondent's suggestion that because Detective Hammond did not actually view Leon Grider distribute the drugs to LW, the Government was required to produce the tapes. *See* Resp. Exceptions at 12–13.

I further reject the ALJ's finding that ''[t]he record casts serious doubts as to the reliability of any audio or video tapes made related to this proceeding,'' ALJ at 56 n.22, as unsupported by substantial evidence. Given that neither party introduced the tapes into evidence and the ALJ observed both Detective Hammond and LW testify and found them to be credible, this finding is both incorrect and unnecessary.

at 3202. The Government subsequently introduced into evidence photographs of two pill bottles; the bottles bear prescriptions labels for 28 Suboxone tablets under the prescription number 4439582, and list BL as the patient and a Dr. WLS as the prescriber. GX 71.

On March 18, BL called the dispatch center and the call was patched through to Chief Irvin, who was then at home. Tr. 3203. The call was recorded and played into the record; in addition, a copy of the recording was submitted into evidence. *Id.* at 3204; 3215.

During the call, BL complained that her daughter had seen Irvin ''the other day about Leon.'' *Id.* at 3215. BL further stated that her daughter had attempted to fill an outdated prescription but that Leon Grider had refused to so and that JD had told her that because Grider wouldn't fill her prescriptions, she was going to ''get him.'' *Id.* at 3216. BL accused her daughter of making up the allegations she raised with Irvin. *Id.* at 3216–17.

When BL maintained that Grider had not been giving out pills, Irvin responded: ''Well, can you explain to me why that there are bottles with your name on them, with your name on them, that are exactly duplicated, that's a violation of the law?'' *Id.* at 3217. BL replied: ''no, no, no, no, no, no, no, no,'' and in response to Irvin's follow-up question, stated: ''he has not done that.'' *Id.* After stating that he had a different view of Grider's conduct and he knew that the allegation was true, BL explained that ''[t]he only time he ever fronted me—and that was when I was in the hospital, because I missed my doctor's appointment, and he g[a]ve me a couple but he took it right back out when I came in and went to the doctor's.'' *Id.* at 3218. Asked by Irvin to explain her answer, BL then stated: ''What I mean by that is he went to the hospital. He knew I needed that medication. He knew that I was going to the doctor. And he took that back out of my prescriptions. * * * I don't see anything wrong with that.'' *Id.* BL then asserted that ''as soon as [she] got out of the hospital, [she] went to the doctor,'' and that upon filling the prescription, Grider took out ''what he had given me'' and that she did not ''see anything wrong with that.'' *Id.* When asked why she needed a pharmacist to give her medication when she was in the hospital, BL stated that she ''was getting ready to leave and * * * didn't know how quickly I could get in to my doctor.'' *Id.* at 3219. BL further asserted that Grider ''was doing this to help me out. He knew I needed the medication'' and that ''I was going to get them and that I would pay him right back.'' *Id.* at 3221.

Respondents introduced into evidence an affidavit of BL (dated April 17, 2006) which she provided in a civil action brought by Leon Grider and others against Irvin and others. RX 106. Therein, BL stated that she ''had a valid prescription for [c]lonazepam which [she] had filed [sic] at Grider Drug'' and that she had ''asked the pharmacist to provide [her with] two (2) bottles so that [she] could legally carry and possess this medication'' when she was not home as she ''did not want to carry an entire, full bottle'' on her person. *Id.* at 1. In the affidavit, BL further stated that ''Leon Grider has never provided me any prescription medications without a Doctor prescribing them.'' *Id.* at 2.

Respondents also introduced into evidence various pharmacy records including a Narcotic and Controlled Drug Sales Report (compiled from the Grider #1 pc V Pharmacy System software) listing BL's prescriptions from December 2005 through July 1, 2010, as well as copies of her prescriptions. *See* RX 121. While the sales report lists prescription number 4439582, with a date of ''01/30/06'' for Suboxone and lists Dr. WLS as the prescriber, *see id.* at 1, the exhibit does not contain a copy of the prescription. Moreover, while the sales report also lists a January 3, 2006 Suboxone prescription issued by Dr. WLS, the report indicates that no refills were authorized by it. *See id.*

Having reviewed the relevant evidence (including having listened to the recording of BL's phone conversation with Chief Irvin), I find that BL's statement in her affidavit was false. I further conclude that substantial evidence supports a finding that Leon Grider distributed Suboxone to BL on or about January 30, 2006, at which time she did not have a prescription for the drug.[40]

Allegation Fourteen—Respondents Violated Their Corresponding Responsibility by Distributing Controlled Substance Prescription to Patients Engaged in Doctor-Shopping

As explained above, during the course of the proceeding, the Government issued a second Show Cause Order which also immediately suspended Respondents' registrations. ALJ Ex. 21. The Order raised additional allegations that Respondents were filling controlled substance prescriptions for six patients (TA, RB, JB, JR, SR, CR), who were obtaining the prescriptions from multiple doctors, and that in doing so, Respondents were violating their corresponding responsibility because they ''knew or should have known that the * * * dispensed controlled substances were likely to be diverted or used for other than legitimate medical purposes.'' *Id.* at 2–3.

As proof of the allegation, the Government submitted exhibits showing Respondents' dispensings of controlled substances to each of these patients, which were prepared by Detective Hammond. *See* GXs 52–57. While Detective Hammond reviewed KASPER reports and developed information regarding the patients, he also subpoenaed each patient's profiles from the pharmacies, as well as his/her medical records from their doctors. Tr. 3299–301. Finally, Detective Hammond interviewed many of the prescribing physicians and/or dentists and prepared

[40] I have considered the various issues raised by Respondents to impeach both JD's and Chief Irvin's credibility. With respect to JD's credibility, I note that the ALJ repeatedly found her testimony credible notwithstanding that at the time of her testimony, she was under indictment for drug trafficking charges. ALJ at 47–48. It is further noted that BL's statement during her phone call to Chief Irvin corroborated JD's testimony with respect to Leon Grider's having distributed Suboxone to BL when she was in the hospital.

Respondents also waged an extensive assault on Chief Irvin's credibility. In her opinion, however, the ALJ cited Chief Irvin's testimony as support for her finding that BL obtained controlled substance from Leon Grider without a prescription. *See* ALJ at 48 (FoF 187 (citing Tr. 3204–05)). I also find Chief Irvin's testimony credible.

The ALJ nonetheless made several findings regarding Irvin which can only be described as gratuitous. For example, she found that ''Anna Mae Grider provided uncontested testimony concerning'' a traffic stop that Irvin made of a Grider employee (ML), which Grider alleged was done to harass ML. ALJ at 58 (FoF 227). Anna Mae Grider, however, had no firsthand knowledge of this incident and the only other evidence supporting it is an unsworn letter by ML. Thus, even if this finding would tend to show bias on the part of Chief Irvin, it is not supported by substantial evidence.

Next, the ALJ also found that ''[t]he record contains evidence of other complaints being made against Irvin'' and ''Mrs. Grider believes Det. Hammond and Chief Irvin 'have it out' for the Griders.'' *Id.* at 59 (FoFs 229 and 232).

This proceeding is neither an internal affairs review board nor an investigating grand jury such as the one which Mr. Faller got ''fired up.'' Rather, the ALJ's sole function is to make findings that are relevant and material to the allegations raised by the Government. The ALJ's findings numbers 229 and 232 are not probative of any material issue in the case.

The ALJ made a further finding based on Anna Mae Grider's testimony that following a burglary at one of the Respondents, Chief Irvin retrieved a surveillance tape at the store and that ''faces were seen on the tape,'' but that Irvin took the tape and when Mrs. Grider went to the police station to view the tape, it had been erased. *Id.* (FoF 231). However, Mrs. Grider was not present when the tape was initially viewed. Tr. 4758. Moreover, while Greg Grider (another son of Anna Mae and Leon) testified that a face was visible on the tape, the ALJ did not cite this testimony as a basis for her finding and did not make any finding as to whether his testimony was credible. Thus, as ultimate factfinder, I reject this finding.

spreadsheets for each patient listing their prescriptions, the date issued, the quantity dispensed and the number of days of supply it provided, the prescriber, and the dispensing pharmacy. *Id.*

The Government also elicited the testimony of Donald Sullivan, Ph.D.,[41] a registered pharmacist who is also a Professor of Pharmacy Practice and the Department Chair of Pharmacy Practice at Ohio Northern University. Dr. Sullivan was qualified as an expert and testified as to the standards of pharmacy practice with respect to the dispensing of controlled substances; Dr. Sullivan also prepared a report based on his review of the prescriptions issued to each of the six patients and testified as to whether Respondents dispensings violated the Controlled Substances Act. GXs 65–66, Tr. 3405, 3414–26.

To refute the Government's contentions, Respondents called Eric Grider, the son of Leon Grider and pharmacist in charge of Grider #2, as well as Tonya Moses, a pharmacist and employee of Respondents who worked at each of the stores. In addition, Respondents called each of the six patients who were accused of doctor-shopping to testify, as well as several of the practitioners who prescribed to them. Additionally, Respondents introduced various documents.

The Expert's Testimony and Report

The ALJ found that Dr. Sullivan credibly testified as an expert witness in the areas of the standards of pharmacy practice and the standards for dispensing controlled substances. ALJ at 25; *see also* Tr. 3402. In preparing his report, Dr. Sullivan reviewed prescriptions, a report prepared by Detective Hammond, patient profiles from the Respondents, Kentucky pharmacy regulations, and KASPER reports. Tr. 3393, 3427–28, 3429–33, 3442–43, 3497–98. However, because Dr. Sullivan clearly reviewed the prescriptions and patient profiles, the Government has established that his testimony was based on sources other than the KASPER data.

Dr. Sullivan testified that the concept of ''corresponding responsibility'' means that the pharmacist and the physician ''have a shared responsibility to make sure that each prescription is for a legitimate medical purpose.'' Tr. 3403, 3418. According to Dr. Sullivan, pharmacists are taught to question prescriptions that they may find are unlawful or suspicious. Dr. Sullivan identified the following examples of ''red flags'' which should lead a pharmacist to question the legitimacy of a prescription: (1) When a patient is obtaining controlled substances from multiple doctors, (2) when patients are being prescribed duplicate controlled substances that treat the same indications, (3) when patients seek early refills, (4) when patients obtain prescriptions for large quantities and large doses, and (5) when patients travel long distances from where they live to either the prescriber or the pharmacy. *Id.* at 3404; *see also* GX 66, at 3.

Dr. Sullivan further testified as to the obligation of a pharmacist under Kentucky law to review a patient's profile and conduct a drug utilization review (DUR) prior to dispensing a prescription. Tr. 3410. As he explained in his report:

Kentucky and federal law states that, prior to dispensing every prescription, the pharmacist shall review the patient profile (prospective drug utilization review or DUR) for the following:

(a) Over-utilization or under-utilization,

(b) Therapeutic duplication,

(c) Drug-disease state contraindications,

(d) Drug-drug interactions,

(e) Incorrect drug dose or duration of treatment,

(f) Drug-allergy interaction,

(g) Abuse/misuse,

(h) Inappropriate duration of treatment,

(i) Documented food/nutritional supplements-drug interactions.

GX 66, at 2. Dr. Sullivan further explained that over-utilization could involve ''a couple of different things,'' including ''using more than one prescription drug for the same indication'' and patients seeking refills ''too early.'' Tr. 3411. As an example of incorrect/inappropriate dosing and/or duration of treatment, Dr. Sullivan explained that ''some narcotic cough syrups * * * should only be used for a limited period of time, based on the diagnosis.'' *Id.* at 3412. And as examples of abuse or misuse, Dr. Sullivan testified ''[t]hat's where you would look for patterns of patients getting things filled too early, going to multiple doctors, traveling long distances, therapeutic duplication, just a pattern of there's something not quite right going on with how this patient is using this therapy.'' *Id.*

Regarding the statement in his report that it was ''clear that the pharmacists at the Grider Drugs did not do prospective DUR,'' GX 66, at 2; Dr. Sullivan explained that this is a legal requirement, which is ''very easy'' to comply with, as it can be done ''[j]ust by pulling up the patient profile and looking at it.'' Tr. 3413. Dr. Sullivan also testified that even though a pharmacist does not have access to a patient's medical file, the pharmacist should not simply defer to the prescribing physician and fill the prescription because the corresponding responsibility requires that the prescription be issued for a legitimate medical purpose. *Id.* at 3417–18.

Dr. Sullivan testified that when confronted with these ''red flags,'' a pharmacist can take a number of steps in response, including having an extensive conversation with the patient, calling the physician, or refusing to fill the prescription. *Id.* at 3448–49. While in some instances, a pharmacist fulfills his obligation by calling the prescriber, Dr. Sullivan testified that ''there's nothing in the law that says [pharmacists] have to fill anything,'' especially if they feel that a prescription has not been issued for a legitimate medical purpose. *Id.* at 3474–75, 3477–84. Dr. Sullivan also testified that it is a pharmacist's primary responsibility to ensure patient safety. *Id.* at 3407–08; Govt. Exh. 66, at 1.

With respect to his review of patient profiles for the six patients identified in the Suspension Order, Dr. Sullivan opined that ''these patients all exhibited multiple instances of'' several of the red flags he identified. Govt. Exh. 66, at 3. Dr. Sullivan further opined that any ''reasonable and prudent pharmacist would have caught this behavior and refused to dispense controlled substances to these patients. These are all textbook examples of drug abuse and/or drug diversion. Any reasonable and prudent pharmacist would quickly recognize this based on their education, training, and experience.'' *Id.* at 8. And in his testimony, Dr. Sullivan opined that the manner in which controlled substances were dispensed by the Respondents was not in compliance with the accepted standards of practice observed by pharmacies and pharmacists in the Commonwealth of Kentucky. Tr. 3426. A discussion of the patient-specific evidence follows.[42]

[41] Dr. Sullivan obtained his Ph.D. in Pharmaceutical Administration; he also holds an M.S. in this area and a B.S. in Pharmacy; he obtained all three degrees from The Ohio State University. GX 65. Dr. Sullivan has published dozens of articles on pharmacy practice in peer-reviewed journals, as well as several books. *Id.* In addition, he has made numerous presentations on pharmacy-related topics including state and federal pharmacy laws. *Id.*

[42] Noting the ALJ's ruling on the admissibility of the KASPER data, Respondents also contend that Dr. Sullivan's opinions ''were based almost exclusively on the prescriptions information he was provided based on KASPER report data provided him.'' Resp. Exceptions at 15. Dr. Sullivan made

Continued

TA

TA (GX 52) is a woman in her early to mid-thirties. Between June 19, 2009 and April 29, 2010, TA obtained thirty-four prescriptions for federally-controlled substances such as Duragesic (fentanyl, a schedule II drug); Endocet (oxycodone, a schedule II drug); hydrocodone with acetaminophen (schedule III); alprazolam and clorazepate (both schedule IV drugs); as well as eight prescriptions for carisoprodol, which at the time was scheduled only under Kentucky law but which has since been placed in schedule IV of the Controlled Substances Act. GX 52, Tab C; *see* also 21 CFR 1308.12 (listing schedule II drugs), 1308.13 (schedule III), 1308.14 (schedule IV); ALJ at 5–6 (stipulated facts); 76 FR 77330 (2011) (scheduling of carisoprodol).[43] All but three of the thirty-four prescriptions were filled by either Grider #1 or Grider #2, with all but three of the prescriptions being filled by Grider #1. GX 52, Tab B, at 3 & Tab C; Tr. 3298, 3857–3859.

TA's prescriptions were written by twelve different prescribers. GX 52, at Tab C. The prescribers included two pain clinic doctors (Dr. H and Dr. P); three dentists practicing at a clinic named Associates in Dentistry (Dr. C, Dr. S, and Dr. M); another dentist (Dr. G); two oral surgeons who did not practice together (Dr. A and Dr. H); a psychiatrist (Dr. M); and his nurse practitioner (NP W). Tr. 3844–47, 4435.

While the prescriptions written by the various dentists who treated TA were typically only for a few days' supply of hydrocodone, throughout this period TA was also receiving prescriptions from pain management doctors for thirty-day supplies of both schedule II and III drugs such as Duragesic (fentanyl), Endocet (oxycodone), and hydrocodone/apap. GX 52, at Tab C. For example, on June 19, 2009, TA received prescriptions from Dr. H for 10 Duragesic patches and 90 tablets of hydrocodone 10/500, both being a thirty-day supply. *Id.* Yet on June 24, 2009, TA received an additional twelve hydrocodone/apap from Dr. C, a dentist. *Id.* Similarly, on August 15, 2009, TA received another 100 hydrocodone 10/500 (this being a twenty-five day supply) from Dr. H, and on August 24, she received another sixteen tablets of hydrocodone from Dr. G. *Id.*

On September 4, TA obtained another prescription for 100 hydrocodone 10mg, a twenty-five day supply from Dr. H (her pain doctor), followed by a prescription on September 16 for twenty hydrocodone 10mg from Dr. H (the oral surgeon), which she refilled on September 18; followed by a September 24 prescription for 120 Endocet, a thirty-day supply, from Dr. P, her new pain doctor. [44] *Id.; see also* Tr. 3882. On October 22, Dr. P issued TA a second prescription for 120 Endocet (also a thirty-day supply), and yet TA received twenty hydrocodone from Dr. S on October 31, twenty-four hydrocodone from Dr. A on November 4, and sixteen hydrocodone from Dr. C on November 16. GX 52, at Tab C.

On November 18, Dr. P issued TA another prescription for 120 (thirty-day supply) Endocet; TA then obtained ten hydrocodone from Dr. G on November 30, twelve hydrocodone from Dr. M on December 3, and twenty hydrocodone from Dr. A on December 10. *Id.* Continuing this pattern, on December 17, Dr. P issued TA another prescription for 120 (thirty-days) of Endocet; TA then obtained twelve hydrocodone from Dr. C on December 28, twelve hydrocodone on January 2, 2010 from Dr. M, twelve hydrocodone from Dr. S on January 4, and twelve more hydrocodone on January 6 also from Dr. M. *Id.* In addition to the various narcotics she received (and the carisoprodol), beginning on December 31, 2009, TA obtained prescriptions for thirty-day supplies of benzodiazepines including clorazepate and alprazolam from NP W, and Dr. M.

Over the course of time, TA had all of her teeth extracted; she also testified that she was never told that any of the extractions were unnecessary. Tr. 3912, 3926, 3969. Dr. G, one of the dentists who treated TA on various occasions in 2006 (when he extracted two of her teeth) and 2009, testified at the hearing that he had reviewed her chart and that she had ''bad teeth. They weren't in great shape and she needed extractions.'' *Id.* at 4446. Dr. G also testified that at one of TA's visits, which probably occurred in 2009, she complained that an extraction, which had recently been done by another dentist, was causing lots of pain. *Id.* at 4447. Dr. G testified that it was ''hard to tell exactly what [was] going'' and because TA claimed she had ''lots of pain,'' he referred her to an oral surgeon. *Id.* at 4448. Dr. G testified that he wrote TA a prescription for ''a few days of pain pills to give her time to get into the oral surgeon.'' *Id.* at 4449. While Dr. G testified that TA's pain complaint seemed reasonable, he further explained that when a patient comes in after having seen another doctor, he would start checking up on the patient. *Id.* at 4449–50.

Following this incident, Dr. G saw TA several more times. At the first of these visits, TA wanted another tooth extracted; however, because Dr. G ''thought that it would be a difficult extraction,'' he referred her to an oral surgeon. *Id.* at 4457. At the second visit, Dr. G told TA that she needed to have a ''full mouth extraction'' and would need to have this done by an oral surgeon. *Id.* After referring TA to an oral surgeon, Dr. G made a chart entry on TA's chart indicating that she was not to be prescribed any more pain medications. *Id.* at 4490–91.

In his report, Detective Hammond noted that TA engaged in a pattern of going to a dentist to have a procedure performed and then going to another dentist or oral surgeon to complain about the procedure that was done and to seek hydrocodone. GX 52, at Tab B, at 3. During his interview with Dr. A, one of the oral surgeons who treated TA, Dr. A noted that during her last visit (January 26, 2010), TA had complained about a procedure performed by another practice, Dental Associates, and had asked him to look at it. *Id.* However, Dr. A referred her back to Dental Associates and noted in TA's chart that ''she was seeking pain medications.'' *Id.* Detective Hammond further noted that the dental providers TA saw ''ranged from Somerset, KY to Campbellsville, KY which are about 75 miles apart.'' *Id.*

Dr. G acknowledged that it would be the ''norm'' for a patient whose teeth have deteriorated to the point of requiring a total extraction to have pain. Tr. 4459. However, when questioned as to whether he would have prescribed hydrocodone 5/500 to TA (as he did on August 24, 2009) if he had known that she had received 100 hydrocodone 10/500 from Dr. H (her first pain doctor) on August 15th, Dr. G stated that ''he wouldn't have prescribed that with knowledge of the previous prescription'' because the earlier prescription was ''twice as strong as what [he] prescribes for four days.'' *Id.* at 4467. Upon being asked by Respondents' counsel whether he ''would prescribe this limited amount as a booster on top of what she was already prescribed,'' Dr. G stated that he ''would not prescribe'' it even for a limited period.[45] *Id.* Moreover, on

clear, however, that he had also reviewed copies of the prescriptions. Tr. 3430–31.

[43] The Final Order scheduling carisoprodol discussed the extensive evidence of the abuse of carisoprodol, especially when taken in conjunction with other drugs such as narcotics and benzodiazepines. *See* 76 FR 77330.

[44] In addition to Endocet, Dr. P prescribed thirty-day supplies of carisoprodol to TA numerous times. GX 52, at Tab C.

[45] Dr. G did testify that on occasion he has had chronic pain patients, who would require extra

cross-examination, Dr. G was asked whether he would have issued his November 30 prescription for ten hydrocodone 5/500 if he had known that TA had obtained a prescription for Endocet twelve days earlier. *Id.* at 4479–80. Dr. G answered ''no'' and explained that he ''wouldn't have prescribed something that's not near as strong just because the stronger medication should normally take care of the pain.'' *Id.* at 4480. And later in his testimony, Dr. G explained that while he did not ''know what's considered a lot of medication in the world of pain clinics * * * I just know that there is no reason for me to prescribe it, and there are different doctors.'' *Id.* at 4520.

Dr. G reiterated that he did not receive a phone call from Grider #1 regarding any of the prescriptions that TA was receiving from other practitioners. *Id.* at 4511. Indeed, he testified that he was never contacted by either Grider #1 or Grider #2 regarding any of his patients. *Id.* at 4479. Moreover, upon reviewing the spreadsheet (Tab C) and examining the names of the various prescribers, Dr. G testified that ''[t]he only prescriber [he] recognize[d] are a few of the dentists and oral surgeons. All of the physicians, I assume they are physicians, I don't recognize any of their names. I don't even know what county they are in.'' *Id.* at 4468.

In her testimony, TA denied ever having sold prescriptions. Tr. 3901. However, on May 11, 2010, Detective Hammond went to Dr. P's clinic and interviewed him regarding TA; he also reviewed the medical record which Dr. P maintained on her and observed that Dr. P had performed several urine drug screens on her. GX 52, at Tab B, at 2–3. While the report for TA's March 10, 2010 urinalysis noted that she had listed that she was taking Percocet, hydrocodone, Soma, and Xanax, the results came back negative for benzodiazepines, opiates, and oxycodone. *Id.* TA, however, had received a prescription for 60 tablets (a thirty-day supply) of alprazolam on February 18, as well as a prescription for 120 tablets (also a thirty-day supply) of oxycodone on February 11.[46] GX 52, Tab B, at 3.

TA testified that she was unsure whether the dentists knew about the controlled substance prescriptions from Dr. H or Dr. P. *Id.* at 3915, 3941. However, she testified that she believed that she did not inform her dentists of those prescriptions. *Id.* at 3915–3916. TA believed the pain management doctor was the one who had to know about all of the controlled substances that were being prescribed to her. *Id.* at 3942.

Tonya Moses, a pharmacist and former employee of Respondents, also testified for Respondent. Ms. Moses acknowledged that Grider #1 had filled prescriptions for TA for a lesser strength of hydrocodone from a dentist (Lortab 5) which overlapped with prescriptions for Lortab 10 from a pain management doctor. *Id.* at 4203. The ALJ found credible Ms. Moses' testimony that the second, lesser strength prescription would not be justified, because ''[i]f the 10 mg is not controlling the pain, the five isn't. So, she had no reason to get that.'' *Id.* Ms. Moses acknowledged that this was an example of therapeutic duplication. *Id.* Ms. Moses further testified that it was ''incumbent upon a pharmacist to verify with the doctor if he sees multiple physicians prescribing, basically, the same medication.'' Tr. 4214.

Respondents also called Dr. M, a family practitioner with thirty years of medical practice, whose wife's sister is married to Eric Grider, and who is a partner with Leon Grider in the medical office building where he maintains his office and Grider #2 is located. *Id.* at 5266–67. Dr. M acknowledged the existence of doctor-shopping and the prevalence of prescription drug abuse in Eastern Kentucky. *Id.* at 5962–63. Dr. M did not treat TA. *Id.* at 5357, 5361. However, upon being shown the spreadsheet listing TA's prescriptions, Dr. M acknowledged that TA's pattern of obtaining prescriptions and ''taking about four [hydrocodone] a day on a regular basis,'' as well as other drugs, and seeing different doctors, ''would be a matter of major concern'' and ''probably [wa]s a potential'' doctor-shopping situation. *Id.* at 5364–65.

Dr. Sullivan noted the multiple instances in which Grider Drug #1 filled hydrocodone and/or oxycodone prescriptions issued by different doctors days before the date on which an earlier prescription for either of these drugs would have been totally consumed. Tr. 3416–17; Govt. Exh. 66, at 3–4. As Dr. Sullivan wrote in his report: ''[t]his pattern of filling hydrocodone and oxycodone prescriptions early when the patient still had medication left from a previous prescription occurred a total [of] 11 times during a ten-month period.'' *Id.* at 4. Dr. Sullivan also noted that ''[i]n addition to the hydrocodone and Endocet prescriptions, the patient was also receiving alprazolam and carisoprodol, which are known to be heavily abused. This provides further evidence that the patient was engaged in the abuse and/or diversion of controlled substances.'' *Id.* Finally, Dr. Sullivan opined that ''[a]ny reasonable and prudent pharmacist would have determined that the patient was either abusing and/or diverting these controlled substances.'' *Id.*

Notably, Leon Grider, who was the pharmacist at Grider #1, did not testify in the proceeding.

RB

RB (GX 53) is forty-year old female. Between December 2007 and April 2010, RB filled approximately 200 prescriptions which were written by two doctors (Dr. L & Dr. P) for such controlled substances as hydrocodone/apap tablets, alprazolam, and various narcotic cough syrups including Polytussin, Vicotuss, Z Hist, Tussionex, and Z Tuss.[47] GX53, at Tab C. At least 172 of these prescriptions were filled at Respondents, with all but seven filled at Grider #2. *Id.* Moreover, approximately 100 of the prescriptions were for the narcotic cough syrups. *Id.* However, according to Dr. Sullivan, narcotic cough suppressants are intended for the short-term relief of cough due to upper respiratory conditions, and in 2006, the clinical guidelines were changed to ''strongly discourage the use of any type of cough suppressant in treating any type of cough.'' Tr. 3419. Yet for the entirety of the twenty-eight months covered by the spreadsheet, RB received prescriptions from both Drs. P and L for narcotic cough suppressants which authorized the dispensing of 15,000 milliliters of these drugs. *Id.* at 3419–21; GX 66, at 4; GX 53, at Tab C.

RB also repeatedly obtained hydrocodone tablets throughout this period while she was receiving the narcotic cough suppressants. *See* GX 53, Tab C, at 1. For example, on December 7, 2007, RB filled at Grider #2 a prescription from Dr. L for 60 tablets (a thirty-day supply) of Lorcet 7.5/650mg; however, on December 12, 17, 20, as

medication for four days after a procedure, because otherwise they would run out of the medication they take for chronic pain. Tr. 4451–52. However, Dr. G explained that in this situation he would ''have to get with the pharmacist * * * or have to call [the patient's] physician.'' *Id.* at 4451. However, on both Respondents' direct examination and the Government's cross-examination, Dr. G was adamant that he would not have prescribed to TA if he had known about her prescription for 120 hydrocodone 10/500. *Id.* at 4478.

[46] While TA's urine drug screen was negative for opiates, and Detective Hammond noted that she had listed hydrocodone as a drug she was taking, TA's last hydrocodone prescriptions provided only a two-day supply and had been issued approximately two weeks earlier.

[47] This figure excludes the 52 prescriptions for Ultram (tramadol) which were listed on the spreadsheet. However, this drug is not currently controlled under federal law.

well as January 2 and 4, 2008, she also filled at Grider #2 four prescriptions for Polytussin and one for Codiclear. *Id.* Notably, while Dr. P wrote the Polytussin prescriptions, Dr. L wrote the Codiclear prescription. *Id.*

Likewise, on January 7, 2008, RB filled at Grider #2 a prescription from Dr. L for another 60 tablets (again a thirty-day supply) of Lorcet. *Id.* However, RB filled at Grider #2 two prescriptions issued by Dr. P for Polytussin on January 11 and 16, a prescription for Codiclear issued by Dr. L on January 22, and prescriptions for Z Hist issued by Dr. P on January 30 and February 4, 2008. *Id.*

As another example, on March 18, 2009, RB filled at Grider #2 a prescription issued by Dr. L for thirty tablets (a thirty-day supply) of Lorcet. *Id.* at 3. RB then filled prescriptions issued by Dr. P for Z Hist on March 20 and 30, as well as April 13, and a prescription issued by Dr. L for Tussionex on March 26. Each of these prescriptions was filled at Grider #2, and while the Z Hist prescriptions were for either four or six-day supplies, the Tussionex prescription was for a twelve-day supply. *Id.* In addition, notwithstanding that RB had obtained a thirty-day supply of Lorcet on March 18, on both March 30 and April 6, RB also filled at Grider #2 prescriptions issued by Dr. P for twenty additional tablets of Lorcet. *Id.*

In addition, even putting aside that RB was obtaining prescriptions from both doctors, the evidence shows that on multiple occasions, RB obtained early fills (or refills) of her prescriptions. For example, on July 21, 2008, RB filled at Grider #2 a prescription issued by Dr. L for a twelve-day supply of Tussionex, yet only four days later, she again obtained at Grider #2, an additional twelve-day supply of Tussionex. *Id.* at 2.

Moreover, on both April 28 and May 22, 2009, RB filled at Grider #2 prescriptions issued by Dr. L, each being for thirty tablets of Lorcet (a thirty-day supply).[48] *Id.* at 3. The latter prescription was thus filled six days early. Moreover, on June 16, RB filled a prescription (also written by Dr. L) for another thirty tablets of Lorcet at Grider #1, this also being a thirty-day supply; this dispensing was thus five days early.[49] *Id.*

Also, on July 15, 2009, RB filled at Grider #2 a prescription for 60 tablets of Lorcet (this also being a thirty-day supply). *Id.* at 4. Yet on August 5, 2009, RB filled at Grider #2 a prescription for 60 tablets of Lorcet; thus, this dispensing was nine days early. *Id.*

As for the Xanax (alprazolam), on July 23, 2009, RB filled at Grider #2 a thirty-day supply. *Id.* Yet on August 12, 2009, RB obtained another thirty-day supply; thus, this dispensing was ten days early. *Id.* Moreover, on November 6, 2009, RB filled at Grider #2 another thirty-day supply. *Id.* at 5. However, on November 27, RB obtained at Grider #2 another thirty-day supply, this dispensing being nine days early. *Id.* Finally, RB obtained at Grider # 2 a thirty-day supply on January 28, February 15, and March 8, 2010. *Id.* The February 15 dispensing was thus twelve days early, and the March 8 dispensing was nine days early.[50] *Id.*

On April 7, 2010, Detective Hammond interviewed Dr. L. GX 53, Tab B. Dr. L stated that he did not know that RB was also seeing Dr. P during the same period she was seeing him. *Id.* at 1. When Detective Hammond asked Dr. L whether he would have prescribed any controlled substances to RB if he had known that she was also obtaining the same or similar drugs from Dr. P, Dr. L answered ''absolutley [sic] not.'' *Id.*

On April 9, 2010, Detective Hammond interviewed Dr. P, who likewise stated that he was unaware that RB was also seeing Dr. L at the same time she was seeing him. *Id.* at 2. Dr. P also stated that he would not have prescribed controlled substances to RB if he had known that she was also receiving the same or similar drugs from Dr. L.[51] *Id.*

Upon reviewing the spreadsheet of RB's prescriptions, Eric Grider testified that he did not find RB's controlled substance prescriptions unusual, given the limited number of days' supply provided by each prescription. Tr. 3607–08. Regarding RB's numerous prescriptions for narcotic cough medicines, Grider asserted that these drugs could be used on both a short and long term basis, and gave as an example of the latter, COPD or chronic coronary disease with a cough. *Id.* at 3673. However, Grider admitted that he did not know if RB had either condition and that he never asked her doctors whether she had one of these conditions. *Id.* Moreover, RB testified that she never talked to a pharmacist at Grider Drugs about her medications, *id.* 4676, and that no one at Grider Drugs ever questioned her about her prescriptions. *Id.* at 4688–89.

Eric Grider further testified that, notwithstanding that RB was being prescribed narcotic cough syrups by two different doctors, he did not see any potential for abuse or misuse of the medications. *Id.* at 3678. However, in retrospect, Grider conceded that he should have contacted RB's doctors to ensure they were aware that the other was prescribing to her. *Id.*

As for RB's having filled the prescriptions at several different pharmacies, Eric Grider acknowledged that this was ''sometimes'' indicative of doctor-shopping. *Id.* at 3680. However, Grider testified that because his store was not signed up to obtain KASPER reports and RB did not have insurance and was ''a cash-paying patient,'' there was ''no way to know'' that she was getting prescriptions filled at other (non-Grider) pharmacies. *Id.* at 3602.

Dr. Sullivan concluded that RB's behavior ''clearly indicates this patient was abusing and or diverting this medication.'' GX 66, at 4. Dr. Sullivan opined that this abuse and or diversion ''should definitely have been caught by the pharmacist.'' *Id.* Also, at the same time RB was taking this narcotic cough suppressant containing hydrocodone, RB was also taking hydrocodone-containing pain killers. Such drug overlap indicates a duplicate therapy was being used. Tr. 3421. Dr. Sullivan also noted a pattern of early refills of Xanax prescriptions. He concluded that ''[n]o reasonable and prudent pharmacist would fill Xanax prescriptions this early on so many occasions.'' GX 66, at 5.

JB

JB is a female in her mid-fifties. GX 54, Tab A. Between September 2, 2009 and May 4, 2010, JB filled fifty-seven controlled substance prescriptions; fifty of the prescriptions were filled at Grider #2, with the remaining seven being filled at the Russell Springs Pharmacy. *Id.* at Tab C. The prescriptions, which were issued by three different doctors,

[48] Also, on both May 13 and June 18, Grider # 2 filled a prescription for twenty tablets of Lorcet issued by Dr. P. GX 53, Tab C, at 3–4.

[49] While the spreadsheet does not list what pharmacy this prescription was filled at, a listing of RB's Medical Expenses establishes that she filled the prescription at Grider # 1. GX 53, at Tab D.

[50] There is also evidence showing that RB also filled prescriptions for hydrocodone and alprazolam at other pharmacies, during the same period in which she was obtaining these drugs at Respondents. *See* GX 53, Tab C.

[51] Respondent introduced a statement from Dr. P. stating that RB ''has a legitimate reason to take pain medicine'' because of various displaced discs. RX 127. However, Dr. P further stated that he ''did not know until April 2010 she was seeing other physicians,'' thus corroborating in part the statement in Detective Hammond's written report. *Id.*

However, even if RB has a legitimate reason to take pain medicine for her back, Dr. P's statement does not explain why she was obtaining narcotics from Dr. L as well. Nor does Dr. P's statement establish that RB had a medical condition which warranted the prescribing of narcotic cough syrups, or the alprazolam. Thus, this letter does not refute the Government contention that RB was engaged in doctor-shopping and that Respondents violated their corresponding responsibility under federal law in filling her prescriptions.

were for Lyrica (pregabalin), Propoxyphene N/Apap, Tussionex (a schedule III drug containing hydrocodone indicated for cough and allergy), hydrocodone/apap, alprazolam and Valium (diazepam). *Id.*

The evidence shows that Grider #2 repeatedly filled prescriptions presented by JB for alprazolam and Valium which were issued by two different doctors. Specifically, on September 17, 2009, Grider #2 filled a prescription issued by Dr. B for 90 alprazolam .5mg (a thirty-day supply), and yet on September 24, Grider #2 filled a prescription issued by Dr. E for 60 Valium 10mg (a twenty-day supply). *Id.* On October 13, Grider #2 filled a prescription issued by Dr. E for another 60 diazepam (also a twenty-day supply), and three days later, it filled a prescription issued by Dr. B for 90 alprazolam (thirty-day supply). *Id.* Respondent filled additional prescriptions issued by Dr. E for 60 diazepam (twenty-day supply) on October 31, December 7, 2009, and January 28, February 17, March 9, April 9, and April 30, 2010; it also filled additional prescriptions issued by Dr. B for 90 alprazolam (thirty-day supply) on November 19, December 18, 2009, and January 21, February 17, March 18, and April 21, 2010. *Id.* In total, Grider #2 dispensed eight alprazolam prescriptions, each providing a thirty-day supply, for a total of 240-days' supply of this drug, and nine diazepam prescriptions, each providing a twenty-day supply, for a total of 180-days' supply of this drug; these prescriptions thus provided 420-days' supply of medication for a period which was only eight-months in duration.

With respect to these prescriptions, Dr. Sullivan explained that alprazolam and diazepam are controlled substances in the same therapeutic class of benzodiazepines. Continuing, Dr. Sullivan explained that:

> [t]he two drugs, diazepam 10mg and alprazolam 0.5mg are used for the same indication. I cannot think of any clinical reason why a patient would be using these two drugs at the same time for a period of seven months. Any reasonable and prudent pharmacist would not have filled prescriptions for these two medications to be taken at the same time. This is an obvious sign of either prescription drug abuse and/or diversion.

GX 66, at 5. Dr. Sullivan also observed that on February 17, 2010, Grider #2 had filled prescriptions for both diazepam and alprazolam presented by JB. *Id.*

With respect to JB, the evidence also shows that throughout most of the period in question, she was simultaneously receiving prescriptions for hydrocodone from both Dr. E and Dr. J. GX 54, at Tab C. However, while JB filled Dr. E's prescriptions at Grider #2, she filled Dr. J's prescriptions at the Russell Springs Pharmacy. *Id.*

Respondents called JB to testify. Tr. 5072. However, after some preliminary questions, JB informed the tribunal that she was under indictment for prescription fraud and that she was invoking her Fifth Amendment privilege. *Id.* at 5073. JB was excused, and although she was subject to recall, *id.* at 5077, Respondents did not recall her.

Eric Grider, pharmacist at Grider Drug #2, also testified regarding JB's prescriptions. Grider, who offered the remarkable testimony that he did know of any doctor-shopping having occurred in Russell County, *id.* at 3639, testified that JB's prescriptions did not raise a red flag with him even though she was simultaneously obtaining them from three doctors.[52] *Id.* at 3613. Regarding the hydrocodone prescriptions which JB was simultaneously filling at both Grider #2 and the Russell Springs Pharmacy, Eric Grider testified that Russell Springs Pharmacy was not connected with Grider Drugs. *Id.* at 3611. Mr. Grider then suggested that the only way he would have known about the prescriptions filled at Russell Springs Pharmacy was if it had billed Medicaid because JB had Medicaid, but if Russell Springs Pharmacy did not ''bill her Medicaid, [he] wouldn't [have] know[n]'' about those prescriptions. *Id.* However, in his testimony, Mr. Grider admitted that Respondents did not subscribe to KASPER and thus did not check to see whether their patients were obtaining drugs from multiple doctors or pharmacies. *Id.* at 3539–40, 3551.

As for the prescriptions that Grider #2 filled, Mr. Grider maintained that he had talked with the patient and that ''the rest of them [we]re legitimate prescriptions for her symptoms.'' *Id.* at 3613. He also asserted that the prescriptions were not a large number given the number of days' supply they provided. *Id.* at 3615; RX 120F; GX 54, Tab C. However, Grider offered no further explanation as to why it was appropriate to fill JB's prescriptions for alprazolam and diazepam, and as found above, the prescriptions for these two drugs provided 420 days' supply for period of eight months' duration.

JR

JR is a male in his late fifties. GX 55, Tab A. Between November 2, 2009 and April 29, 2010, JR filled thirty-four prescriptions for narcotics including hydrocodone, OxyContin, and Tussionex, which were issued by five different doctors; all but one of the prescriptions were filled at Grider #1. *Id.* at Tab C. However, JR testified that he was diagnosed with colon cancer in September or October 2009, and that he was terminally ill at the time of his testimony in December 2010.[53] Tr. 4235. JR further testified that Dr. W was his family doctor and that Dr. M worked with Dr. W, that Dr. N was his oncologist, that Dr. K was a surgeon who had performed various procedures on him, and Dr. B was a pain management specialist. *Id.* at 4238–39. In addition, a Dr. JB performed a surgical procedure on JR. RX 120B, at 9, 34.

JR testified that he had several bulging or ruptured disks in his back and that he had been on disability for a long time and been receiving painkillers for fifteen years. *Id.* at 4243. According to JR, Dr. W issued the November 2 prescription for 90 hydrocodone 7.5/500 (a thirty-day supply) for his back pain; Dr. K issued the November 23 prescription for 20 hydrocodone 10/500 (for a three-day supply) for post-surgery pain, likely following a biopsy. *Id.* at 4244. On December 1, JR received an additional 60 hydrocodone 7.5/500 (this also being a thirty-day) supply, and two days later, Dr. JB wrote him an additional prescription for twenty hydrocodone 10/500 (also a three-day supply), for pain following the installation of a chemotherapy port.[54] GX 55, at Tab C; RX 120B, at 34; Tr. 4246. Dr. W wrote additional prescriptions for 60 hydrocodone 10/500 (these being fifteen-day supplies) on December 31, as well as on January 14 and 28, and February 10, 2010. GX 55, at Tab C. However, on January 21, JR also filled a prescription for another 30 hydrocodone issued by Dr. N, his oncologist. *Id.*

On February 19, 2010, Grider #1 dispensed to JR 60 tablets of OxyContin 20mg (a thirty-day supply) based on a prescription issued by Dr. K. *Id.* Yet one week later (Feb. 26), Grider #1 filled for JR a prescription for 60 hydrocodone 7.5/500 (also a thirty-day supply) issued by Dr. W, and five days later (March 3), Respondent dispensed to JR 120

[52] According to Eric Grider, Dr. J is a family physician, Dr. E is an ear, nose and throat specialist, and Dr. B is a psychiatrist. Tr. 3612–13.

[53] The ALJ did not, however, make a finding as to whether she found this testimony credible. *See* ALJ at 37–39.

[54] While the actual prescription was written by Dr. JB, the label for the prescription that was dispensed listed Dr. K as the prescriber. RX 120B, at 34. On December 18 and 23, as well as January 8, 2010, Dr. K wrote additional short term prescriptions for hydrocodone10/500. The record does not, however, establish why.

hydrocodone 10/500 (a thirty-day supply), based on a prescription issued by Dr. B. *Id.*

Moreover, on March 8 (just five days later), Grider #1 dispensed to JR another 60 tablets of OxyContin 20mg (a thirty-day supply) which was prescribed by Dr. B, and on March 19, it dispensed to JR 60 tablets of OxyContin 30mg (a thirty-day supply), as well as 30 tablets of hydrocodone 10/500, both of which were prescribed by Dr. K. *Id.* Only one week later (on March 26), Grider #1 dispensed to JR another 60 OxyContin 20mg (thirty-day supply) and another 30 hydrocodone 10/500; both prescriptions being issued by Dr. K. *Id.* On April 2, JR filled at Grider #1 a prescription for 120 hydrocodone 10/500 (thirty-day supply) issued by Dr. B; he also filled, albeit at a different pharmacy, a prescription for 60 OxyContin 20mg, which was also issued by Dr. B.[55]

Ms. Moses filled several of JR's prescriptions at Grider #1; she also reviewed Grider #1's records and prepared notes regarding several of the dispensings. On November 23, 2009, she had filled a prescription for twenty tablets of hydrocodone 10mg which was issued by Dr. K. Ms. Moses documented on the prescription that JR had filled a prescription for Lortab 7.5mg on November 2, to be taken one tablet, twice a day. Dr. K's prescription was for one tablet every six hours. Ms. Moses justified filling the hydrocodone 10mg prescription because JR had seen a surgeon, the strength of the drug was higher, and the dosing interval had increased. Tr. 4164–65.

Ms. Moses became aware of the Lortab 7.5mg prescription from the pharmacy technician who had run the Lortab 10mg prescription through the computer. Ms. Moses did not call either physician. *Id.* at 4165–66. She asked JR if he had had surgery done, and JR told her that Dr. K had put in a port for his chemotherapy. *Id.* at 4166; *but see id.* at 4244 (JR's testimony that he may have had a biopsy done on this date). Ms. Moses testified that she collected this information on November 23, before she filled the prescription. *Id.*

According to Ms. Moses, a similar scenario arose with the prescription of December 3, 2009, because she knew JR was a cancer patient and had undergone a colon re-section. *Id.* at 4167–68. Moreover, the December 3rd prescription (issued by Dr. JB) was limited to a three-day supply of hydrocodone 10mg to help JR control his pain. *Id.* While Ms. Moses was aware that JR had also obtained hydrocodone 7.5mg from his primary care physician, she testified that she used her professional judgment in deciding to fill the hydrocodone 10mg prescription because she knew that hydrocodone 7.5mg twice a day would not control his post-surgical pain. Tr. 4167–68; RX 120B. Ms. Moses knew that after the 3-day supply was exhausted, JR would return to the hydrocodone 7.5mg medication for pain control. Tr. 4168.

Ms. Moses also testified regarding a January 21, 2010 prescription issued to JR by his oncologist Dr. N. *Id.* According to Ms. Moses, JR presented a prescription for the same strength (hydrocodone 10/500) and dosing interval (four tablets per day) as provided in a prescription Grider #1 had filled one week earlier which was issued by JR's primary care doctor. *Id.* at 4168. Ms. Moses testified that she called JR's oncologist to get his approval to fill the prescription and was told by a nurse that it was ''okay to fill,'' which she annotated on the hard copy of the prescription. *Id.* The evidence corroborates this. *See* RX 120B, at 46–47.

Ms. Moses offered a similar explanation as to why Grider #1 filled a March 8, 2010 prescription for OxyContin 20mg. Tr. 4169. Ms. Moses testified that she recognized that JR had received an earlier prescription for OxyContin 20mg on February 19, and that she told JR that she could not fill the prescription until March 17. *Id.* JR then told Ms. Moses that ''he was completely out of his medicine, because * * * the dosing * * * wasn't controlling his pain.'' *Id.* Ms. Moses testified that she agreed to call the ''the surgeon's office'' and that the nurse said ''that they were aware that [JR] was out of his medicine, and gave me the okay to fill that.'' *Id; see also* RX 120B, at 65. Ms. Moses further stated that it was within professional standards to fill this prescription. *Id.*

Respondents' counsel also asked Ms. Moses about the March 26, 2010 OxyContin prescription for a thirty-day supply which was filled by Leon Grider. *Id.* This prescription was at issue because the previous OxyContin prescription, which was also for a thirty-day supply, had been filled only one week earlier. As Ms. Moses testified, the March 26 prescription bore the notation: ''ok early per MD—last RX stolen pt had police report.'' RX 120B, at 71. As noted above, both the March 19 and 26 prescriptions were issued by Dr. K. GX 54, at Tab C. Ms. Moses testified that filling this prescription was within professional standards. Tr. 4170.

Next, Respondents' counsel asked Ms. Moses about the May 5, 2010 refill request it received from Dr. W, JR's primary physician. This form, which was faxed into Grider #1, stated ''needs all meds called in (including cough syrup)'' and listed numerous medications; however, various controlled drugs including Lortab and OxyContin were crossed out and the document also bore the notation ''No controlled drugs except Ativan.'' RX 120B, at 80.

According to Ms. Moses, a staff member at Dr. W's office ''wrote down all of [JR's] medications, including OxyContin 20mg, which Dr. W does not prescribe for him. Therefore, Dr. W was aware of JR's taking this for pain control from another physician.'' *Id.; see also* Tr. 4170–71. However, even if this evidence establishes that Dr. W was aware that JR was receiving OxyContin from another doctor (and it does not establish whether Dr. W was aware that JR was still obtaining prescriptions from another doctor on the various dates when he prescribed a thirty-day supply of hydrocodone to JR), it does not address whether Drs. K and B, who were prescribing OxyContin and hydrocodone to JR during the same time period, were aware that they were also simultaneously prescribing these drugs.

JR testified that he told Dr. K and Dr. N about the prescriptions he was receiving from Dr. W for his chronic back pain. Tr. 4246, 4256. However, during an interview Detective Hammond conducted with Dr. K on May 4, 2010, Dr. K stated that ''he had given him [JR] multiple prescriptions while treating him but had he known he was getting controlled substances from other doctors he would not have prescribed him anything other than right after surgery and he wouldn't have prescribed him as much.'' GX 55, Tab B, at 1. Dr. K further told the Detective that JR ''did not tell him what he was getting from other doctors'' and that while ''[h]e assumed Dr. W, his family physician, had given him something for pain * * * he did not know it was an ongoing situation. Also, he did not know [JR] was going to a pain clinic.'' *Id.*

On the same date, Detective Hammond interviewed Dr. W, JR's primary care physician who had referred him to Dr. K. *Id.* at 2. Dr. W stated that he knew JR ''would get something from Dr. K after his surgery but did not know [JR] would be continually getting medications * * * from Dr. K.'' *Id.* Dr. W further stated that he would not have prescribed the hydrocodone and Tussionex if he had

[55] In addition, on ten occasions throughout this period, Dr. W prescribed a ten-day supply of Tussionex, a hydrocodone based cough syrup, to JR. GX 55, at Tab C.

known [that JR] was getting the same and/or similar medication from Dr. K because [JR] was getting 'too much' with both of them prescribing.'' *Id.* Dr. W also stated that JR ''did not tell him that Dr. K was also giving him pain medications on a regular basis.'' *Id.*[56]

Detective Hammond also interviewed Dr. B, who runs a pain management clinic at a hospital in Danville, Kentucky. *Id.* at 3. Dr. B. stated that ''he did not know [JR] was getting OxyContin from Dr. K or controlled substances from Dr. W.'' *Id.* Dr. B also stated that ''patients at his clinic * * * are locked into a pain management contract in which they are the only ones that will be treating their pain,'' and that if he had known that JR was getting controlled substances from other doctors, he would not have treated him.[57] Id.

With respect to JR's OxyContin and hydrocodone prescriptions, Dr. Sullivan noted that that while ''on rare occasions, cancer patients will use a second narcotic like hydrocodone for break-through pain on an 'as needed basis' for a short-term period[,] [t]he same doctor would write prescriptions for both.'' GX 66, at 6. However, Dr. Sullivan then noted that JR ''was receiving prescriptions from both Dr. [K] and Dr. [B] for both drugs at the same time. He also received Tussionex (hydrocodone) prescriptions from Dr. [W] as well during this period.'' *Id.* Dr. Sullivan then explained that ''[t]his is a major red flag that the patient was receiving hydrocodone prescriptions from three different doctors and OxyContin from two different doctors at the same time. Any reasonable and prudent pharmacist would have caught this and not filled these prescriptions.'' *Id.*

Dr. Sullivan further noted ''[o]f the thirty three controlled substance prescriptions filled'' by Grider #1, ''at least eleven times the pharmacy filled the medication too early.'' *Id.* Dr. Sullivan opined that ''[t]his is clearly a sign of the pharmacy not conducting prospective DUR for abuse/misuse[,]'' and that ''[n]o reasonable or prudent pharmacist would have filled this many narcotic prescriptions this early.'' *Id.* Finally, Dr. Sullivan noted that the ''duplicate therapy with both hydrocodone and oxycodone (OxyContin) from more than one prescriber is a clear indication of drug abuse and/or diversion and any reasonable and prudent pharmacist would have detected this.'' *Id.*

CR

CR is a male in his late fifties. CR testified that in July of 1996, he was involved in an incident in which another person beat his back with a two-by-four and broke two of his ribs; CR was treated in the emergency room and prescribed Lorcet. Tr. 4030–31. Thereafter, Dr. P, CR's family doctor, treated his back injury, and prescribed controlled substances to him. *Id.* at 4033. CR also testified that sometime in 2007, he again injured his back while he was visiting a hospital; however, CR told two different versions of this incident, as he initially testified that as he was leaving a bathroom, boxes fell off a cart and knocked him back against the wall, but then testified that he was run over by a cart that weighed 1200 pounds. *Compare id.* at 3985 *with id.* at 4044. However, CR testified that he was not on pain medication at the time of this incident. *Id.* at 4044.

CR testified that Dr. P referred him to Dr. C for potential surgery and pain management. *Id.* at 4033–34, 4042–43. CR decided not to have the surgery until he changed his mind in January 2010. *Id.* at 4035. CR filled his controlled substance prescriptions at the Respondents. *Id.* at 4040.

The Government submitted a spreadsheet showing CR's controlled substance prescriptions between November 16, 2007 and April 2, 2010. GX 56, Tab C. The spreadsheet shows that during this period, CR filled approximately 170 controlled substance prescriptions,[58] and of these, all but seven were filled at either Grider #1 or Grider #2. *See id.* The prescriptions were for such drugs as alprazolam (schedule IV), hydrocodone combined with acetaminophen (schedule III), Demerol (schedule II), and various narcotic cough medicines including Pneumotussin, Z Hist, and Z Tuss Acc.[59] *See id.*

Moreover, CR was simultaneously obtaining prescriptions for narcotics from both Drs. P and C. Typically, CR would receive a prescription for 120 tablets of Vicodin 5 (hydrocodone 5/500mg) for a thirty-day supply from Dr. C, each of which he filled at Grider #1.[60] *See id.* While by themselves these prescriptions would not appear to be suspicious given the quantity and dates of issuance, throughout the period, CR also obtained and filled 49 additional prescriptions for twenty tablets of hydrocodone 7.5/650mg which were issued by Dr. P. *See id.* While the prescriptions issued by Dr. P were generally for only a three or five-day supply, notably, CR filled all but two of these prescriptions at Grider #2.[61] Also, CR obtained seven prescriptions

[56] In their Exceptions, Respondents contend that ''[t]he fact that a patient's surgeon over this period was prescribing small quantities of the same controlled substance, although in varying degrees of strength, that the patient's primary care physician was prescribing would not trigger the need to question either of these doctors' prescriptions.'' Resp. Exceptions at 19. Respondents do not cite any evidence to support this contention, and the statements of Drs. K and W indicate that had they known that JR was obtaining prescriptions they would have taken steps to reduce the quantities that were being prescribed.

[57] With respect to Dr. K's authorization of a new prescription (which was filled on March 26, 2010) based on the theft of JR's OxyContin, Detective Hammond noted that the theft had occurred at the Russell County Hospital and that the incident was captured by a video camera. *Id.* at 2. Detective Hammond interviewed the police officer who responded to this incident and noted that upon reviewing the video tape, JR's ''car was not locked and the person who broke into the vehicle appeared to know exactly where the pills were located'' as she ''was in the vehicle only a short amount of time and did not appear to be searching in the vehicle.'' *Id.* The responding officer also stated that JR ''was very persistent * * * about the pills being stolen and that she [the officer] may have to talk to the doctor so he could get his pain pills. [JR] was also very knowledgeable about the fact that the break in should be caught on video as he was within range of a security camera, [and] in fact he informed [the officer] of this.'' *Id.*

In his report, Detective Hammond also noted various notations in the patient filed maintained by Dr. W. These included a report that on October 29, 2009, JR called and requested a refill of Lortab, which Dr. W apparently rejected as he noted in the chart: ''Hell no! not due.'' *Id.* Moreover, on November 19, 2009, a person called Dr. W's office to report that JR was ''selling his pain pills and Xanax'' to her daughter. *Id.* Also, a chart note dated November 20, 2009 stated: ''Patient needs to bring in pill bottles next week for pill counts and UDS-any day next week.'' According to the chart, on November 23, JR ''brought in his Xanax bottle with 2½ pills left'' and did not have a bottle for the Lortab. *Id.* at 3. The chart further noted: ''Patient stated no Lortab left, no bottle, his yorkies get the lids off.'' *Id.* Notably, Detective Hammond's statements regarding both the November 19 phone call and JR's November 23 visit are corroborated by other evidence in the record. *See* GXs 75 and 76.

In his report, Detective Hammond then noted that while he was at Dr. B's clinic, he was approached by a nurse (JB), who told him that ''she had received a call from a Russell Co. phone number, in which the caller said [JR] was diverting his pain pills to her grandson in exchange for him mowing his yard'' and that ''her grandson is addicted to pain pills.'' *Id.* Also, in his testimony, JR admitted that he had ''loaned'' controlled substances to friends on occasion. Tr. 4317–18, 4320–21.

Accordingly, I find that while JR had a serious medical condition which warranted the prescribing of controlled substances, there is also substantial evidence that he engaged in the diversion of controlled substances.

[58] This figure excludes some twenty-six tramadol prescriptions.

[59] CR filled approximately twenty prescriptions for narcotic cough syrups throughout the nearly thirty-month period covered by the spreadsheet. *See* GX 56, Tab C.

[60] In total, CR received thirty such prescriptions from Dr. C; however, the last two prescriptions, which were also for a thirty-day supply, were for only 90 tablets. GX 56, Tab C, at 7.

[61] On December 26, 2007, CR also obtained a prescription for twenty-eight hydrocodone/apap from NP CR, which he filled at Grider #2.

from Dr. P for Demerol, which he also filled at Grider #2. *See id.*

Notably, while CR testified that Dr. P knew he was also seeing Dr. C, CR testified that he did not tell Dr. P that he was also getting controlled substances from Dr. C and Dr. P did not ask him if he was. Tr. 4028–29. Moreover, on April 9, 2010, the Detective, who had reviewed the medical record maintained by Dr. P on CR, interviewed Dr. P and asked him whether he would have prescribed controlled substances to CR if he had known that CR was getting the same or similar drugs from Dr. P. GX 56, Tab B, at 2. Dr. P answered ''no.'' *Id.*

The Detective also interviewed Dr. C, who said that he had asked CR if he was obtaining controlled substances from any other doctors and that CR said ''he was not.'' GX 56, Tab B, at 1.[62] The Detective then asked Dr. C if he would have prescribed controlled substances to CR if he had known that CR was obtaining the same or similar drugs from other doctors. *Id.* Dr. C answered ''absolutely not.'' *Id.*

Respondents did not call either Dr. P or Dr. C to testify. Instead, they called a Nurse Practitioner C–R,[63] who worked in an emergency room and treated CR after an accident in which he represented that he had hurt his elbow. Tr. 4051–52. NP C–R prescribed twenty-eight tablets of hydrocodone/apap 7.5/650mg, which CR filled at Grider #2. However, six days earlier, CR had filled at Grider #1 a prescription issued by Dr. C for 120 tablets of hydrocodone/apap 5/500mg. *Id.* at 4006–07, 4052; GX 56, Tab C, at 1.

NP C–R did not remember CR or any facts surrounding her treatment and prescribing to him. Tr. 4360–63, 4367. However, upon being shown the evidence that CR had filled the prescription for 120 tablets only six days earlier, NP C–R testified that given the close proximity of the two prescriptions, she would have expected the pharmacist to call her to verify the authenticity of the second prescription. *Id.* at 4429.

Ms. Tanya Moses, Respondent's witness, also testified regarding these two prescriptions. Similar to the testimony of NP C–R, Ms. Moses testified that if NP C–R's prescription had been presented to her, she would have called the physician to let him/her know of the overlapping prescription. *Id.* at 4220–21.

Dr. Sullivan further noted that on multiple occasions, Respondents had filled prescriptions for both hydrocodone tablets and narcotic cough suppressants, which contain hydrocodone. GX 66, at 7. Most significantly, in his report, Dr. Sullivan opined that ''[a] reasonable and prudent pharmacist would have not allowed a patient to take these medications at the same time and noticed this as a potential indication of prescription drug abuse and/or drug diversion.'' *Id.*

In addition to the narcotic prescriptions, the evidence shows that CR received 64 alprazolam prescriptions and refills that were authorized by Dr. P, each of which was for a thirty-day supply, for a total of 1,920 days' supply of the drug during a period of thirty months. *See* 56, Tab C. Of these prescriptions, all but seven of them were filled at Respondents, and of the seven which were not filled by Respondents, CR did not start filling these at another pharmacy until late April 2009. *See id.* Thus, for approximately seventeen months, CR filled all of the alprazolam prescriptions at either Grider #1 or Grider #2. Indeed, the frequency at which CR presented the alprazolam prescriptions and sought refills of them provides compelling evidence that CR was engaged in self-abuse and/or diversion.

For example, on November 23, 2007, Grider #2 filled a thirty-day supply; it also refilled the prescription on December 18 and on January 31, 2008. *See id.* at 1. Yet on December 29, 2007, Grider #1 also filled a thirty-day supply based on a different prescription; it refilled the prescription on January 26, February 23, and March 21, 2008. *See id.* Moreover, notwithstanding that it had dispensed a refill the previous day, on February 1, 2008, Grider #2 filled a new prescription for thirty-day supply, which it refilled on February 29 and March 27, 2008. *See id.* Moreover, on March 31, 2008, Grider #1 dispensed a new prescription, even though it had refilled the previous prescription only ten days earlier and that Grider #2 had refilled a prescription only four days earlier. *Id.*

The evidence shows numerous other instances in which Respondents filled or refilled the alprazolam prescriptions within days of having filled or refilled an earlier prescription. For example, on April 24, 2008, Grider #2 dispensed a refill, and yet, just six days later on April 30, it dispensed a new prescription. *Id.* at 2. Moreover, on April 28, Grider #1 dispensed a refill. *Id.*

Likewise, on May 24, 2008, Grider #1 dispensed a further refill, and yet, on May 27, Grider #2 also dispensed a refill. *Id.* Moreover, on June 20, Grider #1 dispensed another refill, and on June 23, Grider #2 dispensed another refill. *Id.* Grider #2 also dispensed a new prescription on July 3, refilled a previous prescription on July 21 (which was first filled on April 30), and then on July 31, it refilled the July 3rd prescription. *Id.*

As other examples, Grider #1 filled or refilled thirty-day alprazolam prescriptions on December 29, 2008, as well as on January 16 and 27, February 14 and 23, and March 12, 2009. *Id.* at 3–4. Grider #2 also filled or refilled thirty-day prescriptions on January 5, February 27, and and March 27, 2009.[64] *Id.*

Regarding the alprazolam prescriptions, CR offered two explanations, neither of which is credible. First, when questioned about the alprazolam prescriptions he filled on January 31, as well as on February 1, 2008, CR claimed that he got the extra alprazolam because he ''was going out of town for a couple or three weeks.'' Tr. 4013. Yet earlier in his testimony, CR stated that the earliest he ever got a refill was three to four days early; he also testified that he did not regularly go out of town. *Id.* at 3995–96. Moreover, CR had just obtained a refill on January 26. Thus, even if CR actually was going out of town, he had no need for either the January 31 or February 1, 2008 refills and I find that this testimony is patently disingenuous.

Next, when asked about the alprazolam prescriptions he filled on March 21, 27, and 31, 2008, CR testified that Dr. P had written him another prescription because ''I was going through some bad things,'' and that while he was ''not sure,'' Dr. P did so instead of writing a prescription for two

[62] CR testified that he did not recall that the patient history forms he completed for Dr. C had asked about what drugs he was taking. Tr. 4047. However, CR admitted that he never told Dr. C that he was also receiving controlled substances from Dr. P, stating that:

I never had any reason to. I didn't know if he knew or—I mean I just figured everybody knowed [sic]. I thought they could pull these KASPERS I think they call it and find out anything so I didn't think there was anything wrong. I thought you could go from little drug to just a tiny bit stronger. Because Lortab 75's ain't enough to—nothing to even touch what pain I have most days.

Id. at 4039.

[63] NP C–R testified concerning her current practices in prescribing controlled substances and reviewing KASPER reports. Tr. 4340–4434.

[64] As noted above, CR apparently decided to become somewhat less brazen as beginning in late April 2009, he started filling some of the alprazolam prescriptions at a Rite Aid. However, even then there were numerous instances in which he filled or refilled alprazolam prescriptions at Respondents within days of each other. For example, on August 21, 2009, Grider #1 filled a new prescription, and yet, on August 25, Grider #2 refilled a prescription. *See* GX 56, Tab C, at 5. Also, on October 15, 2009, Grider #1 refilled a prescription, and yet on October 22, Grider #2, filled a new prescription. *Id.*

tablets a day or 60 tablets. *Id.* CR then stated that it was his belief that this ''is the way it is done.'' *Id.*

Yet the alprazolam prescriptions (including those in which Dr. P purportedly doubled his dosing) all gave the same dosing instruction of ''one tab at bedtime.'' RX 120, Tab C. Moreover, one would expect that if a doctor was actually doubling a patient's frequency of dosing, the prescription would reflect this as is required by federal regulations. *See* 21 CFR 1306.05(a) (requiring that a prescription list, *inter alia,* a drug's ''strength * * * [the] quantity prescribed, [and the doctor's] directions for use''). Thus, if it had been the case that Dr. P had determined that CR had a legitimate medical need to double his dose of alprazolam, Dr. P should have simply increased the dosing instructions on the prescription. And even if CR's condition required that his dose be doubled, that still would not explain why he filled or refilled the prescription three times within a ten-day period (March 21–31, 2008), or did so an additional three times within a six-day period the following month (April 24–30, 2008). Here again, CR's testimony was patently ludicrous and disingenuous.[65]

Eric Grider, the pharmacist in charge at Grider #2, recalled that CR was seeing Dr. P for some back problems, but did not recall the nature of those back problems. Tr. 3744–45. Moreover, Eric Grider admitted that he did not talk to Dr. P about CR, *id.* at 3786, even though Dr. P's office is in the same building as Grider #2. *Id.* at 3989–90.

Eric Grider further asserted that Grider #2 would not have known about the controlled-substance prescriptions CR filled at other pharmacies (including at Grider #1) because CR was ''a cash-paying patient.'' *Id.* at 3619. In addition, Grider stated that he would be unaware of the prescriptions CR filled at Grider #1 ''unless [he] looked in [the patient's] files,'' and then offered the unconvincing explanation that he ''had no reason to'' do so. *Id.* Grider then testified that he did not recall inquiring with Grider Drug #1 about CR's filling of prescriptions at that location, or that Grider #1 had asked Grider #2 about the latter's filling of CR's prescriptions. *Id.* at 3689, 3694. Also, as found above, Grider testified that he was not signed up to obtain KASPER reports on the pharmacy's patients. *Id.* at 3621.

In addition, on direct examination, Eric Grider asserted that the prescriptions which CR filled at Grider #2 would not, by themselves, raise a red flag or lead him to conclude that CR was a problem patient. *Id.* at 3621–22. He also denied being aware of any unauthorized refills which occurred at Grider #2. *Id.* at 3623. Yet when asked on cross-examination about Grider #2's filling of alprazolam prescriptions (on February 1, 2008, notwithstanding having dispensed a refill of an earlier prescription the day before) and refilling (on April 24 and then April 30, 2008), Grider maintained that ''the only way'' he would have done so was if he checked with the doctor (Dr. P) to ensure it was okay to do so. *Id.* at 3690–3. However, the ALJ found that Grider could not specifically recall if he did so in regards to these prescriptions and I find that he did not. ALJ at 43–44 (citing Tr. 3692–93).

Eric Grider then conceded that CR appeared to be a doctor-shopper who engaged in conduct that fit Grider's definition of a problem patient. *Id.* at 3694, 3696. Moreover, contrary to Grider's claim that he had no reason to check the patient profile maintained on CR by Grider #1, I find that given the numerous early alprazolam prescriptions CR presented, Eric Grider had reason to know that CR was engaged in either drug abuse or diversion and thus, Grider had ample reason to check with Grider #1 to determine whether CR was also filling prescriptions there.[66]

Dr. Sullivan noted that there were ''multiple instances where'' CR filled the alprazolam prescriptions ''early at both pharmacies.'' GX 66, at 7. Indeed, after listing four instances of dispensings made by Respondent which ranged from fifteen to ''twenty-nine days too early,'' Dr. Sullivan observed that ''[t]his pattern of filling alprazolam too early for this patient occurred on at least ten other occasions.'' *Id.* Dr. Sullivan then explained that a ''reasonable and prudent pharmacist would never have filled these alprazolam prescriptions as early as the Grider pharmacies did. This shows a pattern of either abuse and/or drug diversion.'' *Id.* I agree with Dr. Sullivan's conclusion.[67]

SR

SR is a woman in her mid-fifties. GX 57, at Tab A. SR testified that she has Type 2 diabetes, that she had neuropathy in her feet, bad arthritis in her shoulders, hands, back, and knees, and anxiety; she also testified that she had to have a tooth extracted and developed a dry socket following this procedure. Tr. 4694–95.

According to the spreadsheet of her prescriptions, between October 3, 2009 and April 23, 2010, SR filled twenty-four controlled substance prescriptions at Grider #2. GX 57, at Tab C. The prescriptions included sixteen for hydrocodone/apap, one for Endocet (oxycodone), and seven for clonazepam.[68] *Id.* While all of the

[65] As another example of CR's frequently disingenuous testimony, on cross-examination, CR initially denied seeing any physician (other then when he went to an emergency-room) in Florida, where, at the time of the hearing, he was renting a house in Palmetto, Florida with others. Tr. 4103–04, 4109, 4025. However, upon being confronted with a prescription he had obtained (on November 29, 2010) for oxycodone 30mg from a doctor at the Pain Center of Broward, a pain clinic located in Fort Lauderdale, *see* GX 73, CR then changed his testimony claiming that he had ''got to hurting so bad'' because he had ''been cut off'' by his Kentucky doctors in April 2010 (seven months before he got the oxycodone in Florida), apparently after they were interviewed by Detective Hammond. Tr. 4107. Subsequently, CR claimed that the day before he obtain the oxycodone he had hurt his back moving furniture and that his pain level following this incident was an ''[e]leven'' on a scale of ''one to ten.'' *Id.* at 4125.

When asked how he had found out about the Pain Center of Broward, CR claimed that he had woken up at about four in the morning because he ''couldn't breathe'' and had his roommates take him to the emergency room, where he asked the doctor where he could get ''a family doctor'' because he ''was having trouble with [his] back.'' *Id.* at 4131–32. CR then made the absurd assertion that Broward is ''kind of a suburb[] of Tampa.'' *Id.* Pursuant to 5 U.S.C. 556(e) and 21 CFR 1316.59, I take official notice of the map of the State of Florida contained in the 1994 Rand McNally Business Traveler's Road Atlas, at 22–23. As this shows, Palmetto and Fort Lauderdale are located on opposite coasts of the State of Florida and are more than 200 miles apart. This begs the further question of why, if CR's pain level was so high, he would travel more than 200 miles to get drugs instead of seeking treatment closer to where he lived.

At another point in his testimony, CR was asked by the Government if he ''ever g[a]ve his pills away to anybody else?'' *Id.* at 4098. CR replied: ''I'd rather not say. Is that okay? I mean can I get by with that or do I have to answer that?'' *Id.* CR then added: ''I've never sold a pill, I'll put it like that.'' *Id.* at 4099.

In short, much of CR's testimony was transparently disingenuous.

[66] There was also evidence that CR saw a Dr. C, who surgically treated him for a hernia, Tr. 4008–09, as well as other doctors because he believed that Dr. P was planning on retiring. These included a Dr. L (who he saw twice), a Dr. W (who he saw three or four times), and a Dr. B (who he saw two to three times). *Id.* at 4010–11, 4056–57, 4065, 4068–69. There was also testimony that CR obtained hydrocodone and Valium from Dr. W and both a cough syrup containing a controlled substance and several hydrocodone prescriptions from Dr. B. *Id.* at 4056–57, 4061, 4068–69, 4071. While the ALJ found that these prescriptions were filled at Respondent and that Dr. B's prescriptions overlapped with those of Dr. P (ALJ at 41, FoF #s 162–63), with the exception of the prescriptions issued by Dr. C, no further evidence was put forward establishing the dates on which these other prescriptions were filled. I thus do not adopt the ALJ's findings on the prescriptions.

[67] As noted above, Leon Grider, the pharmacist in charge at Grider #1, did not testify in the proceeding.

[68] The spreadsheet also lists a prescription for Fioricet, but it is unclear whether this formulation is controlled.

clonazepam prescriptions were issued by Dr. Z, SR received five of the hydrocodone prescriptions and the Endocet prescription from Dr. H; of the hydrocodone prescriptions, eight were issued by Dr. S, and one prescription each was issued by Dr. M, Dr. W, and Nurse Practitioner H. *Id.*

SR denied that she was a doctor shopper, stating that Dr. Z was her psychiatrist and treating her for anxiety. Tr. 4697, 4711. She also stated that Dr. H was an orthopedic surgeon who had performed surgery on her shoulder in March 2010, *id.* at 4697, 4720; that Dr. S and NP H were in the same practice and that Dr. W had replaced Dr. S and was her family practitioner who was treating her for arthritis;[69] that Dr. JS was her foot doctor; and that Dr. M was a dentist who was in an office which had several dentists. *Id.* at 47087, 4711.

The evidence shows that on October 5, 2009, SR received 42 hydrocodone 5/500, a fourteen-day supply, from Dr. S (her then family practitioner); that on October 13, 2009, SR received twelve hydrocodone 7.5/650 (this being a three-day supply), from Dr. M, a dentist;[70] and that on October 21, 2009, SR received 42 hydrocodone 5/500 from NP H. All three prescriptions were filled at Grider #2. Tr. 3592–94, 3710, 3714–15, 4710–11; GX 57, Tab C & Tab D, at 2.

However, SR's dental records include a list of medications she was taking as of October 8, 2009, the date on which she had a tooth extracted; this list is also repeated on the first page of the chart which is an undated form which includes the type of information which a patient would typically complete on the initial visit (such as Identifying Information, Dental Insurance, Medical History, Acknowledgement of Receipt of Notice of Privacy Practices, and Consent). *See* GX 77. Notably, hydrocodone is not on either list even though SR had been prescribed this drug just three days earlier. *See id.* at 1, 3; GX 57, at Tab C & Tab D, at 2.

RS initially testified that she had just forgotten to list hydrocodone because she has ''trouble with [her] memory.'' Tr. 4716. However, she later denied having written the list of drugs which appears on the first page of the form, *id.* at 4727, and did not recall when she had written out the list on page 3 of the form which is dated ''10/8/09.'' *Id.* at 4726.

In addition, the evidence shows that on March 8, 2010, Dr. S (her family doctor) prescribed 90 tablets of hydrocodone 5/500 (a thirty-day supply) and that after this, Dr. H (her orthopedic surgeon) prescribed her thirty tablets of hydrocodone 7.5/500 on March 10, 18, 24, and April 1; most of the prescriptions had dosing instructions of one tablet every six hours, thus providing a week's supply. GX 57, Tab C. In addition, on April 8, Dr. W (who replaced Dr. S as her family doctor but was in the same office) prescribed her 90 more hydrocodone 5/500 (also a thirty-day supply) and on April 23, Dr. H issued her a prescription for another 30 tablets of hydrocodone 7.5/500. *Id.* In total, between October 5, 2009 and April 23, 2010, SR received sixteen prescriptions for hydrocodone representing a 247-day supply. RX 120A.[71]

On May 7, 2010, Detective Hammond interviewed Dr. H, who acknowledged that he was treating SR for a shoulder injury. GX 57, Tab B, at 1. Dr. H stated that he may have given SR the Endocet prescription ''after surgery or told her to double up on the hydrocodone if he had known she was still receiving them from Dr. S.'' *Id.* at Tab C, at 1. However, Dr. H stated that ''he would not have prescribed * * * hydrocodone [to SR] if he was aware [that] she was receiving it from Dr. S.'' *Id.* Thereafter, Detective Hammond reviewed Dr. H's chart on SR and noted that he ''was aware that she was taking hydrocodone.'' *Id.* Detective Hammond conducted a further interview in which he asked Dr. H about this; Dr. H stated that ''the medication list shown in her records is generated automatically by computer from SR's past visits and that she had been a patient since 2003.'' *Id.* Dr. H further stated ''that at the time in question he did not know [SR] was receiving hydrocodone from Dr. S or he would not have given it to'' her. *Id.* Dr. H also stated that ''he would have contacted Dr. S and they would have decided who would be treating [SR] for pain to avoid an overlap in [her] prescriptions.'' *Id.*

Detective Hammond also interviewed Dr. M, who had performed the extraction. *Id.* at 2. Dr. M stated that if SR had ''disclosed [that] she was receiving hydrocodone from another doctor he would not have prescribed it to her.'' *Id.*

Detective Hammond interviewed Dr. S, her former family physician. Dr. S stated that SR had entered into a contract under which she was not permitted to receive controlled substances from another physician without his prior authorization. *Id.* Dr. S also stated that ''[h]e did not know that that [SR] was receiving pain medication from other doctors,'' and that if he had known, ''he would not have prescribed her anything.'' *Id.* While Dr. S was aware that SR ''was going to have surgery and would potentially receive a controlled substance right after surgery[,] * * * he was not aware that she was receiving controlled substances from the surgeon beyond the initial surgery.'' *Id.*

Finally, on May 19, 2010, Detective Hammond met with Dr. W. *Id.* Dr. W, who had seen SR on April 8, 2010 and had prescribed 90 tablets of hydrocodone to her, stated that she was unaware that SR was receiving controlled substances from Dr. H; she also stated that SR was subject to a controlled-substances contract pursuant to which she could not obtain controlled substances from ''other doctors without notifying'' her practice. *Id.* Dr. W further stated that she would not have prescribed hydrocodone if she had known that SR was getting the drug from ''somewhere else.'' *Id.*

As noted above, all of SR's prescriptions were filled at Grider #2, where Eric Grider was the pharmacist charge. In her decision, the ALJ made the following finding: ''Mr. Eric Grider believes, for it is his practice, that he would have told SR not to take the hydrocodone prescribed to her by Dr. S while she takes the stronger hydrocodone prescribed to her by Dr. M. However, he could not specifically recall doing so in this instance, and he does not make notes regarding such counseling because he usually does not have time.'' ALJ at 44 (citing Tr. 3717–18, 3734–38). However, SR testified that no one at Grider Drugs counseled her about her prescriptions. Tr. 4701–02, 4719. SR also testified that she was never questioned by a pharmacist at Grider Drug #2 about the prescriptions she received from Drs. S, M, or any other practitioners. *Id.* at 4719. She was also unaware of anyone from that pharmacy contacting her prescribers. *Id.* at 4724.

Eric Grider acknowledged that he had an obligation to counsel the patient, given the therapeutic duplication noted in these prescriptions. *Id.* at 3724. He also stated that he possibly would call the prescribing practitioners, but he could not recall whether he called Dr. H, and that he did not call Dr. M.[72] *Id.*

[69] SR also referred to Dr. W by her married name of Dr. D. Tr. 4708.

[70] SR's dental record contains a chart note which indicates that her tooth was extracted on October 8, 2009 and that she was prescribed the twelve hydrocodone on that date. GX 77, at 2.

[71] RX 120A is a computation chart showing these sixteen prescriptions and the Respondent's computation of the number of days each prescription should last if the medication is taken as prescribed.

[72] Eric Grider testified that he was aware that SR was seeing Dr. H for a shoulder injury, and he believed SR had told him that information. Tr. 3708. However, he did not contact Dr. H regarding this surgery. Tr. 3789.

at 3725–26. Likewise, he did not recall whether Dr. W had been contacted regarding the therapeutic duplication involved in SR's prescriptions. *Id.* at 3729. Grider denied that he had an obligation to contact the prescribing practitioner, explaining that he views such contact as a courtesy. *Id.* at 3727–28. Grider also testified that he did not believe he had an obligation to call these physicians if he had counseled the patient concerning the appropriate manner in which to consume these duplicative drugs. Tr. 3730.

Grider also testified that he did not find the quantity of hydrocodone he dispensed to SR to be unusual, given the limited number of days' dosage represented by each prescription. *Id.* at 3597–98, 3716. However, as found above, SR received 247 days of hydrocodone during a period of a little more than six and one-half months' duration.

Dr. Sullivan observed that sixteen of SR's prescriptions were for hydrocodone, and ten of these were filled too early because the patient should still have had medication left from a previous prescription. GX 66, at 7.

Summary of Dr. Sullivan's Testimony

With respect to the six patients discussed above, Dr. Sullivan concluded that ''the evidence presented * * * is overwhelming and shows a pattern of dispensing controlled substances significantly early to patients who [were] either abusing controlled substances themselves or [were] diverting prescription drugs for illegal purposes. There are dozens of instances of this occurring in these six patients.'' GX 66, at 8. The pharmacist should have caught this during the process of conducting prospective [drug utilization reviews] before filling these prescriptions.'' *Id.* at 2. Dr. Sullivan explained that it was ''extremely obvious'' that these patients were ''either abusing controlled substances, obtaining them for the purpose of diversion, or a combination of the two.'' *Id.* at 3. In addition, Dr. Sullivan noted that while a pharmacist may ''on an extremely rare occasion fill a prescription for a controlled substances early,'' he then observed that ''[t]here are dozens of instances'' of Respondents providing early refills to these patients. *Id.* at 8.

Dr. Sullivan thus concluded that any ''reasonable and prudent pharmacist would have * * * refused to dispense controlled substances to all six of these individuals.'' *Id.* Noting that these persons were ''textbook examples'' of persons engaged in ''drug abuse and/or drug diversion,'' Dr. Sullivan explained that ''[a]ny reasonable and prudent pharmacist would quickly recognize this based on their education, training, and experience.'' *Id.* Dr. Sullivan concluded that the Respondents' dispensings to these patients violated the accepted standards of practice observed by pharmacies and pharmacists in the Commonwealth of Kentucky.[73] Tr. 3426. I agree with Dr. Sullivan's conclusions.

Allegation Fifteen—Respondents Violated Kentucky Law by Failing To Provide Complete and Accurate Information to KASPER

The Government also alleged that Respondents violated Kentucky law by failing to file KASPER reports. Gov. Post-Hrng Br. at 12, 88. In support of this allegation, the Government introduced into evidence a letter (dated May 13, 2005) from Dave Sallengs, a Registered Pharmacist and Pharmacist Investigator who is the manager of the Drug Enforcement Professional Practices Branch of the Kentucky Cabinet for Health and Family Services Office of the Inspector General, to Grider #2. GX 28; Tr. 2302–03. Therein, Mr. Sallengs noted that the KASPER records show that Grider #2 had not reported any prescriptions for the periods of February 18 through 27, 2003; July 4 through August 4, 2003; and February 1, 2005 to the date of the letter. GX 28. In addition, the Government noted that the KASPER data reported by Respondents contained numerous inaccuracies (such as the double reporting of prescriptions) or the misreporting (or non-reporting) of various prescriber's DEA registration numbers.

Mr. Sallengs, who was called as a witness by Respondents, equivocated as to whether this letter established a serious breach of state law by Grider #2. Tr. 2394–95. More specifically, Mr. Sallengs testified that while ''it's serious from the standpoint that state law says you have to report, and it has to be within certain days, but in our dealings with it, we understand that a lot of times * * * the pharmacy might not even be aware of this until they get this letter.'' *Id.* at 2394. Mr. Sallengs then explained that if his office did not get a response from a pharmacy to such a letter (which they send out to approximately fifteen to twenty pharmacies a week), it would send out a follow-up letter and copy the letter to

[73] It is acknowledged that Dr. Sullivan is licensed in Ohio but not Kentucky. Because of this, the ALJ explained that she did not recognize Dr. Sullivan as an expert in the obligations of a pharmacy specifically under Kentucky law, Tr. 3401–02, and that she gave less weight to his testimony only as it relates to the unique standards imposed by the Commonwealth of Kentucky. ALJ at 47 n.15. The ALJ did not provide any further explanation as to what testimony of Dr. Sullivan she gave less weight to.

In any event, even after *Gonzalez* v. *Oregon,* 546 U.S. 243 (2006), several courts of appeals ''have applied a general-practice standard when determining whether the practitioner acted in the 'usual course of professional practice.' '' *See United States* v. *Smith,* 573 F.3d 639, 647–48 (8th Cir. 2009); *see also id.* at 648 (discussing *Moore;* ''Thus informed by the Supreme Court and other controlling and persuasive precedent, we believe that it was not improper to measure the 'usual course of professional practice' under § 841(a)(1) and [21 CFR] 1306.04 with reference to generally recognized and accepted medical practices * * *.''); *see also United States* v. *Merrill,* 513 F.3d 1293, 1306 (11th Cir. 2008) (quoting *Moore,* 423 U.S. at 139) (''The appropriate focus is not on the subjective intent of the doctor, but rather it rests upon whether the physician prescribes medicine 'in accordance with a standard of medical practice generally recognized and accepted in the United States.' ''); *United States* v. *Feingold,* 454 F.3d 1001, 1009 (9th Cir. 2006) (''[B]oth the Supreme Court and this Circuit have previously approved jury instructions that refer to a national standard of care.'').

Nor is *Volkman* v. *DEA,* 567 F.3d 215 (6th Cir. 2009), to the contrary. As the Sixth Circuit observed, in *Gonzales,* the Supreme Court invalidated the Attorney General's interpretive rule that ''[a]ssisting suicide is not a 'legitimate medical purpose' within the meaning of 21 CFR 1306.04'' and a violation of the CSA which would subject a practitioner's registration to revocation under 21 U.S.C. 824(a)(4), without regard to whether state law authorized a physician to engage in such conduct. *Id.* at 222 (other citation omitted). The Sixth Circuit further explained that the Supreme Court held in *Gonzales* that ''the Controlled Substances Act does not give the Attorney General the authority to 'define general standards of medical practice.' '' *Id.* at 223. Thus, the Supreme Court invalidated the interpretive rule ''because it was not based on the 'public interest' factors described in 21 U.S.C. § 823(f) but was instead the Attorney General's own judgment on a controversial practice without regard to state law.'' *Id.* However, as the Sixth Circuit further recognized, the Supreme Court affirmed that the CSA '''regulates medical practice insofar as it bars doctors from using their prescription-writing powers as a means to engage in illicit drug-dealing and trafficking.' '' *Id.* Thus, in *Volkman,* the Sixth Circuit rejected a physician's challenge to the denial of his application based on *Gonzales,* noting that the Agency's ''assessment of Volkman's prescribing and record-keeping practices was tethered securely to state law,'' and that the Agency's action was consistent with the CSA's '''recognition of state regulation of the medical profession.' '' *Id.* (quoting 546 U.S. at 272).

It is further noted that although Dr. Sullivan's testimony and report were largely based on generally accepted standards of pharmacy practice, he did review the Kentucky Board of Pharmacy's rule on Drug Utilization Review. Tr. 3410–14; GX 66, at 2. With the possible exception of the issue of whether under Kentucky law, a pharmacy technician (rather than a licensed pharmacist or pharmacy intern) can lawfully contact a prescribing physician to question the legitimacy of a prescription, regarding which Dr. Sullivan testified that ''[t]echnicians should not be making those phone calls, judgment or discussions with physicians, even if it's not that way in Kentucky law,'' Tr. 3463–64, no other evidence was put forward showing that the duties of a pharmacist to which he testified would prohibit conduct permitted under state law. Thus, I find that his testimony regarding a pharmacist's obligations to be generally reliable and probative of whether Respondents (and their pharmacists) violated their corresponding responsibility under federal law.

the state pharmacy board, which would determine whether to cite the pharmacy for a violation. *Id.* at 2395. Mr. Sallengs further explained that the letter would not cause him to believe that a pharmacy was being improperly operated because usually a pharmacy's failure to report is due to either changing a computer system or a maintenance problem with a computer system. *Id.* at 2396–97. With respect to the letter sent to Grider #2, Mr. Sallengs did not know if his office had sent out a second letter to it. *Id.* at 2398.

Moreover, Mr. Sallengs expressed the view that where multiple entries under the same prescription number were reported within a few days of each other, it was likely a result ''of a glitch or a technical error, [an] insurance billing issue, or something like that.'' *Id.* at 2391. Indeed, Mr. Sallengs testified that some pharmacy software systems would report under a single prescription number, both when a patient presented a prescription to a pharmacy but could not pay for it that day, as well as the subsequent dispensing of the prescription. *Id.* at 2338. Mr. Sallengs further noted that there were several innocent explanations for the misreporting of various prescribers' DEA registration numbers, including errors in using the database provided by pharmacy software (which typically use a dropdown menu listing all prescribers in the country and which may include both a practitioner's current and expired registration numbers). *Id.* at 2323–25. Mr. Sallengs also explained that from the inception of KASPER until two months before his testimony, once a pharmacy reported information to the database, it was not able to correct any errors in the data. *Id.* at 2446.

On cross-examination, Mr. Sallengs acknowledged that the May 13 letter set forth violations of state law which are a Class A misdemeanor under Kentucky law. *Id.* at 2418. However, Mr. Sallengs further testified that Kentucky law proscribed only the knowing or intentional failure to transmit the information. *Id.* at 2485. Moreover, Mr. Sallengs testified that while he would ''love for everything to be exactly right'' in the KASPER reports, his office does not consider every error to constitute a violation of the statute.

Allegation Sixteen—Respondents Committed Medicaid Fraud

While not alleged in the Order to Show Cause, the Government provided notice in its initial and supplemental pre-hearing statements that it intended to elicit the testimony of an Agent of the Medicaid Fraud Division of the Kentucky Attorney General's Office. More specifically, the Government provided notice that the Agent ''will speak of the recent indictment of Eric Grider, the son of Leon Grider, on six counts related to devising schemes to defraud the Kentucky Medical Assistance Program (KMAP).'' Gov. Supplemental Pre-Hearing Statement at 5–6.

At the hearing, there ensued nearly three days of testimony by the Agent regarding her investigation of Respondents' billing practices, the execution of a search warrant and the seizure of Respondents' records by state officials, and the subsequent indictment of Eric Grider on six state counts of having submitted fraudulent claims to the KMAP ''for prescriptions not dispensed as billed,'' GX 43. *See* Tr. 842–1372. Regarding the alleged fraud, the Agent testified that ''the patient got what was prescribed'' but that ''Medicaid was billed for something different'' Tr. 1092, if the drug was not in the Medicaid formulary. *Id.* at 1108; *see also id.* at 860 (Agent's testimony that ''if a patient came in with a prescription, that patient would receive what the doctor ordered.''). Throughout the Agent's testimony, there was but a single vague comment relating the allegations of misconduct to Respondents' handling of controlled substances, which occurred when the Agent was asked by Respondent's counsel whether the types of drugs being billed for and the types of drugs being dispensed were controlled or non-controlled drugs, and answered: ''They were across-the-board.'' *Id.* at 1116. Ultimately, the indictment against Eric Grider was dismissed by the state court, after it declared a mistrial. RX 128. No further evidence has been offered establishing that the indictment was reinstated and that Eric Grider (or Respondent) has been convicted of an offense which subjects Respondents to mandatory exclusion from participation in federal health care programs under 42 U.S.C. 1320a–7(a).[74]

Discussion

Section 304(a) of the Controlled Substances Act provides that ''[a] registration * * * to * * * dispense a controlled substance * * * may be suspended or revoked by the Attorney General upon a finding that the registrant * * * has committed such acts as would render [its] registration under section 823 of this title inconsistent with the public interest as determined under such section.'' 21 U.S.C. 824(a)(4).[75] In the case of a practitioner, which includes a pharmacy,[76] the CSA requires that the Agency consider the following factors in making the public interest determination:

(1) The recommendation of the appropriate State licensing board or professional disciplinary authority.

(2) The applicant's experience in dispensing * * * controlled substances.

(3) The applicant's conviction record under Federal or State laws relating to the manufacture, distribution, or dispensing of controlled substances.

(4) Compliance with applicable State, Federal, or local laws relating to controlled substances.

(5) Such other conduct which may threaten the public health and safety. *Id.* § 823(f).

''[T]hese factors are * * * considered in the disjunctive.'' *Robert A. Leslie, M.D.,* 68 FR 15227, 15230 (2003). I may rely on any one or a combination of factors, and may give each factor the weight I deem appropriate in determining whether a registrant has committed acts which render its registration inconsistent with the public interest. *Id.* Moreover, although I ''must consider each of these factors,'' I am not required to make ''explicit findings as to each'' factor. *MacKay* v. *DEA,* 664 F.3d 808, 816 (10th Cir. 2011); *see also Volkman* v. *DEA,* 567 F.3d 215, 222 (6th Cir. 2009) (quoting *Hoxie* v. *DEA,* 419 F.3d 477, 482 (6th Cir. 2005)); *see also Morall* v. *DEA,* 412 F.3d 165, 173–74 (D.C Cir. 2005).

The Government has the burden of proving by a preponderance of the evidence that a Respondent has committed acts which render its registration inconsistent with the public interest. 21 CFR 1301.44(d) & (e). However, where the Government has made out a *prima facie* case, the burden shifts to the Respondent to either refute the Government's case or to '''present [] sufficient mitigating evidence' '' to show why, notwithstanding that it has committed acts which render its registration inconsistent with the public interest, it can be entrusted with a new registration. *Medicine Shoppe-Jonesborough,* 73 FR 364, 387 (2008) (quoting *Samuel S. Jackson,* 72 FR 23848, 23853 (2007) (quoting *Leo R.*

[74] Of course, once the Government was allowed to pursue this allegation, understandably, Respondents did not simply rely on their counsel's cross-examination of the Agent but also put on the testimony of their own witnesses regarding the allegations.

[75] DEA is also authorized to suspend or revoke a registration upon a finding that a registrant ''has been excluded (or directed to be excluded) from participation in a program pursuant to section 1320a–7(a) of Title 42.'' 21 U.S.C. 824(a)(5). However, the Government did not cite this provision as a basis for the proceeding.

[76] *See* 21 U.S.C. 802(21).

Miller, 53 FR 21931, 21932 (1988))), *pet. for rev. denied, Medicine Shoppe-Jonesborough* v. *DEA,* 300 Fed. Appdx. 409 (6th Cir. 2008). *See also MacKay,* 664 F.3d at 817.

''Moreover, because 'past performance is the best predictor of future performance,' *ALRA Labs, Inc.* v. *DEA,* 54 F.3d 450, 452 (7th Cir.1995), [DEA] has repeatedly held that where a registrant has committed acts inconsistent with the public interest, the registrant must accept responsibility for its actions and demonstrate that it will not engage in future misconduct.'' *Medicine Shoppe,* 73 FR at 387; *see also Jackson,* 72 FR at 23853; *John H. Kennedy,* 71 FR 35705, 35709 (2006); *Cuong Trong Tran,* 63 FR 64280, 64283 (1998); *Prince George Daniels,* 60 FR 62884, 62887 (1995).

Having considered all of the factors, I conclude that the evidence pertinent to factors two and four makes out a *prima facie* showing that each Respondent ''has committed such acts as would render [its] registration * * * inconsistent with the public interest.'' [77] 21 U.S.C. 824(a)(4). I further conclude that Respondents have not rebutted the Government's *prima facie* case.

Factors Two and Four—Respondents' Experience in Dispensing Controlled Substances and Record of Compliance With Applicable Laws Related to Controlled Substances

While many of the allegations are not proved by substantial evidence because the Government relied on inadmissible KASPER reports and data (or failed to put forward anything other than conclusory evidence), the record nonetheless establishes numerous violations on the part of each Respondent. More specifically, substantial evidence supports a finding that Leon Grider violated the CSA by distributing controlled substances to several persons who did not have prescriptions for the drugs and that both Respondents (and their pharmacists) violated their corresponding responsibility under 21 CFR 1306.04(a) by dispensing controlled substances to several individuals who were clearly engaged in drug-seeking behavior. In addition, the record shows that Respondents could not account for massive quantities of various controlled substances they handled and thus violated their obligations under 21 U.S.C. 827(a) to maintain complete and accurate records of the controlled substances they purchased, distributed, or dispensed. Finally, there is also substantial evidence establishing that Respondents dispensed controlled substances but could not produce either the original prescription or documentation that a prescription was called in, that it filled (or refilled) prescriptions which were not authorized by the prescriber, and that it failed to report several theft incidents to DEA.

Leon Grider's Distributions to PL, LW, and BL

Under the CSA, ''[p]ersons registered by the Attorney General * * * to manufacture, distribute or dispense controlled substances * * * are authorized to possess, manufacture, distribute, or dispense such substances * * * *to the extent authorized by their registration and in conformity with the other provisions of this subchapter.''* 21 U.S.C. 822(b) (emphasis added). Under 21 U.S.C. 823(f), a pharmacy registration authorizes its holder to dispense controlled substances, *i.e.,* ''to deliver a controlled substance to an ultimate user * * * by, or pursuant to the lawful order of, a practitioner.'' *Id.* § 802(10).

The CSA further provides that ''[e]xcept when dispensed directly by a practitioner, other than a pharmacist, to an ultimate user, no controlled substance in schedule III or IV, which is a prescription drug as determined under the Federal Food, Drug, and Cosmetic Act, may be dispensed without a written or oral prescription in conformity with * * * 21 U.S.C. 353(b).'' 21 U.S.C. 829(b); *see also* 21 CFR 1306.21 (''A pharmacist may dispense directly a controlled substance listed in schedule III, IV, or V which is a prescription drug * * * only pursuant to either a written prescription signed by a practitioner or a facsimile of a written, signed prescription transmitted by the practitioner or [her] agent to the pharmacy or pursuant to an oral prescription made by an individual practitioner and promptly reduced to writing by the pharmacist.'').[78] The CSA thus makes it ''unlawful for any person * * * who is subject to the requirements of part C [the registration provisions] to distribute or dispense a controlled substance in violation of section 829.'' 21 U.S.C. 842(a)(1). *See also* 21 U.S.C. 841(a)(1).

As found above, on October 21, 2003, PL, who was cooperating with law enforcement, went to Grider #1 and presented a methadone prescription to Leon Grider; PL also told Grider that she needed some Zs, a street term for Xanax. Tr. 1420–21. However, PL did not have a prescription for Xanax. *Id.* at 1422. After leaving the pharmacy to have a smoke, PL re-entered the pharmacy and then emerged with a white bag, which she turned over to Detective Hammond. *Id.* at 1421. Upon inspecting the bag, Hammond found a pill bottle holding methadone, as well as thirty orange oval-shape pills, which were loose in the bottom of the bag. *Id.* Hammond took custody of the orange pills and submitted them for testing; the pills tested as Xanax. *Id.* at 1421–22. Substantial evidence thus supports the conclusion that Leon Grider violated the CSA in distributing Xanax to PL. 21 U.S.C. 829, 841(a)(1) & 842(a)(1).

The evidence further shows that Leon Grider unlawfully distributed controlled substances to LW on multiple occasions. On February 24, 2004, Leon Grider gave LW forty tablets of both hydrocodone and alprazolam when LW, accompanied by her boyfriend, went to Grider #1 and told Leon Grider that they were going to court but were short on their pills and were concerned that they would be subjected to a pill count. Tr. 1495–96. LW did not have a prescription for the drugs. *Id.* at 1497. Substantial evidence thus supports the conclusion that Leon Grider violated the CSA in distributing

[77] As to factor one, the Kentucky Board of Pharmacy has not made a recommendation in this matter. *See* 21 U.S.C. 823(f)(1). Moreover, while there is no evidence that the State Board has revoked either Respondent's pharmacy license or the pharmacist's license of either Leon or Eric Grider, DEA has held repeatedly that a registrant's possession of a valid state license is not dispositive of the public interest inquiry. *See Patrick W. Stodola,* 74 FR 20727, 20730 n.16 (2009); *Robert A. Leslie,* 68 FR at 15230. As DEA has long held, ''the Controlled Substances Act requires that the Administrator * * * make an independent determination as to whether the granting of controlled substances privileges would be in the public interest.'' *Mortimer Levin,* 57 FR 8680, 8681 (1992).

It is likewise noted that there is no evidence in the record that either Leon or Eric Grider (or either of the Respondents) has been convicted of any offenses under Federal or state laws related to the distribution or dispensing of controlled substances. 21 U.S.C. 823(f)(3). However, there are multiple reasons why even serious misconduct may not be the subject of a criminal prosecution and thus, ''the absence of such a conviction is of considerably less consequence in the public interest inquiry.'' *MacKay,* 664 F.3d at 818. DEA has therefore recognized that the lack of any criminal convictions related to controlled substances is not dispositive. *See Edmund Chein,* 72 FR 6580, 6593 n.22 (2007).

Accordingly, that both Respondents may still hold Kentucky pharmacy licenses and Leon and Eric Grider may still hold their pharmacist licenses is not dispositive. So too, that neither the Respondents, nor either Leon or Eric Grider, have been convicted of an offense related to controlled substances, is not dispositive.

[78] *See also* 21 CFR 1306.11(d) (except in emergency, ''[a] pharmacist may dispense directly a controlled substance listed in schedule II, which is a prescription drug * * * only pursuant to a written prescription signed by the practitioner'').

both hydrocodone and alprazolam to LW. 21 U.S.C. 829, 841(a)(1) & 842(a)(1).

On June 4, 2004, LW obtained drugs from Leon Grider without a prescription on two occasions. First, in the morning, LW went to Grider #1 and obtained both Lortab (hydrocodone) and Xanax. As LW testified, she just went in and asked Leon Grider for some pills which he gave her loose in a brown bag. Tr. 6033. Given that placing loose pills in a bag is not how a prescription is dispensed in the usual course of professional pharmacy practice, *see* 21 CFR 1306.24, and that Leon Grider did not testify in the proceeding, I conclude that he distributed Lortab and Xanax to LW without a prescription.

Later that day, LW called Leon Grider asked him to bring her some methadone. Tr. 1500. Grider agreed to do so and delivered both methadone, which was in a sealed distributor's bottle and another 60 alprazolam (Xanax), which were in an envelope, to LW at her residence. *Id.* at 1500–01. LW did not have a prescription for either drug. *Id.* Substantial evidence thus supports the conclusion that on June 4, 2004, Leon Grider unlawfully distributed Lortab, methadone, and alprazolam to LW. *See* 21 U.S.C. §§ 829, 841(a)(1), 842(a)(1).

On April 24, 2005, LW participated in a further undercover operation. On this occasion, LW (accompanied by PG) met with Leon Grider at a graveyard and asked him for some Duragesic patches. Tr. 1507–08; GX 27. Leon Grider agreed, and later that day, he met PG at a local supermarket, where he gave PG nineteen or twenty Duragesic patches and 88 Xanax pills. *Id.* at 1508–09; GX 27. Neither LW nor PG had a prescription for the drugs. GX 27, at 2. Moreover, LW testified that she told Leon Grider that she was going to sell the patches because she needed money. Tr. 6092. Once again, substantial evidence supports the conclusion that on April 24, 2005, Leon Grider violated the CSA by unlawfully distributing Duragesic (fentanyl, a schedule II drug) and alprazolam, to LW and PG. *See* 21 U.S.C. §§ 829, 841(a)(1) & 842(a)(1).

In addition to the three undercover operations in which she participated, LW credibly testified regarding other instances in which she obtained controlled substances from Leon Grider. More specifically, LW testified that when she was initially confronted by Detective Hammond, Leon Grider gave her $1,000 and three 500-count bottles of hydrocodone and told her that she ''needed to leave town'' to let the authorities ''slack off of [her] for a while.'' Tr. 5396, 5941–42. It does not matter whether this conduct constituted bribing a witness under Kentucky law. Rather, what matters is that this is another example of Leon Grider's distributing controlled substances to LW when she did not have a prescription authorizing the dispensing. Thus, substantial evidence supports the conclusion that Leon Grider unlawfully distributed 1,500 hydrocodone tablets to LW. *See* 21 U.S.C. §§ 829, 841(a)(1) & 842(a)(1).

LW also testified regarding an incident in which Leon Grider had given her a 500-count bottle at the Key Village store only to have his wife (Anna Mae) walk in on the deal. Tr. 5930–32. While Anna Mae testified in the hearing that she took the bottle from LW and that the pills were actually pinto beans, *id.* at 4803, as found above, in a deposition she had previously given, Mrs. Grider testified that the bottle (which was a white bottle and not a prescription vial) contained hydrocodone. GX 68, at 212–15. Moreover, LW testified that the next day, she called Leon Grider, who agreed to meet her at Grider #1, and that upon meeting, Grider gave her two 500-count bottles. Tr. 5932–33. Once again, substantial evidence supports the conclusion that on this occasion, Leon Grider unlawfully distributed 1,000 hydrocodone tablets to LW. *See* 21 U.S.C. §§ 829, 841(a)(1) & 842(a)(1).

LW further testified that she had also received 98 OxyContin tablets as well some Suboxone, also without a prescription, and that Leon Grider would create false prescription labels to provide cover for LW if she was caught by the police. Tr. 5946, 6095–96, 6125. Thus, substantial evidence supports the conclusion that Leon Grider distributed both OxyContin and Suboxone to LW in violation of the CSA. *See* 21 U.S.C. §§ 829, 841(a)(1) & 842(a)(1).

In addition, substantial evidence supports the conclusion that Leon Grider unlawfully distributed Suboxone to BL when she did not have a prescription for the drug. With respect to this allegation, the evidence included a contemporaneous recording of a phone conversation between BL and Chief Irvin in which BL acknowledged that Leon Grider had given her the Suboxone when she was in the hospital and did not have a prescription for the drug, photos of the vials (and their labels) which Leon Grider used to distribute the drug that was delivered, and the testimony of BL's daughter. In addition, while Respondent produced a copy of a sales report listing BL's prescriptions, and this report shows drugs that had previously been prescribed to her, no refills were authorized under the previous prescription and Respondents did not produce a copy of any prescription corresponding to the prescription listed on the vials. I therefore hold that substantial evidence supports the conclusion that Leon Grider distributed Suboxone to BL in violation of the CSA. *See* 21 U.S.C. §§ 829, 841(a)(1) & 842(a)(1).

I further hold that Leon Grider's conduct in unlawfully distributing controlled substances to PL, LW, and BL, is egregious, and is sufficient, by itself, to support the conclusion that Respondents have committed acts which render their registrations ''inconsistent with the public interest.'' 21 U.S.C. 824(a)(4). Thus, this conduct provides reason alone to revoke each Respondent's registration and to deny their applications to renew their registrations.

Respondents' Violations of 21 CFR 1306.04(a)

Under a longstanding DEA regulation, a prescription for a controlled substance is unlawful unless it has been ''issued for a legitimate medical purpose by an individual practitioner acting in the usual course of his professional practice.'' 21 CFR 1306.04(a). This regulation further provides that while ''[t]he responsibility for the proper prescribing and dispensing of controlled substances is upon the prescribing practitioner, * * * a *corresponding responsibility rests with the pharmacist who fills the prescription*.'' *Id.* (emphasis added). Continuing, the regulation states that ''the person knowingly filling such a purported prescription, as well as the person issuing it, [is] subject to the penalties provided for violations of the provisions of law relating to controlled substances.''[79] *Id.*

DEA has consistently interpreted this provision ''as prohibiting a pharmacist from filling a prescription for a controlled substance when he either 'knows or has reason to know that the prescription was not written for a legitimate medical purpose.' '' *East Main St. Pharmacy,* 75 FR 66149, 66163 (2010) (quoting *Medicine Shoppe-Jonesborough,* 73 FR at 381 (quoting *Medic-Aid Pharmacy,* 55 FR 30043, 30044 (1990))); *see also Frank's Corner Pharmacy,* 60 FR 17574, 17576 (1995); *Ralph J. Bertolino,* 55 FR 4729, 4730

[79] As the Supreme Court has explained, ''the prescription requirement * * * ensures patients use controlled substances under the supervision of a doctor so as to prevent addiction and recreational abuse. As a corollary, [it] also bars doctors from peddling to patients who crave the drugs for those prohibited uses.'' *Gonzales* v. *Oregon,* 546 U.S. 243, 274 (2006) (citing *United States* v. *Moore,* 423 U.S. 122, 135 (1975)).

(1990); *United States* v. *Seelig,* 622 F.2d 207, 213 (6th Cir. 1980). This Agency has further held that ''[w]hen prescriptions are clearly not issued for legitimate medical purposes, a pharmacist may not intentionally close his eyes and thereby avoid [actual] knowledge of the real purpose of the prescription.'' *Bertolino,* 55 FR at 4730 (citations omitted).

As the Government's Expert explained, pharmacists are required under Kentucky law to perform a prospective drug utilization review (DUR) prior to dispensing every prescription. *See* 201 Ky. Admin. Regs. 2:210; § 4. The Kentucky regulation requires that the DUR ''shall include an assessment of a patient's drug therapy and the prescription order.'' *Id.* In addition, the DUR ''shall include a review by the pharmacist of the'' following:

(a) Known allergies;
(b) Rationale for use;
(c) Proper dose, route of administration, and directions;
(d) Synergism with currently employed modalities;
(e) Interaction or adverse reaction with applicable:
1. Drugs;
2. Foods; or
3. Known disease states
(f) Proper utilization for optimum therapeutic outcomes; and
(g) Clinical misuse or abuse.
Id.

The Government's Expert further identified various ''red flags'' that pharmacists are trained to be aware of to identify suspicious and unlawful prescriptions. These include: (1) When a patient is obtaining controlled substances from multiple doctors, (2) when patients are being prescribed duplicate controlled substance medications that treat the same indications, (3) when patients seek early refills, (4) when patients are obtaining prescriptions for large quantities and large doses, and (5) when patients travel long distances from where they live to either the prescriber or the pharmacy. *Id.* at 3404.

While Dr. Sullivan explained that when confronted with a red flag, there are several steps a pharmacist can take including talking to the patient, calling the physician, or refusing to fill the prescription, he further opined that each of the six patients whose prescription profiles were entered into the record were ''textbook examples'' of persons engaged in ''drug abuse and/or drug diversion.'' GX 66, at 8. According to Dr. Sullivan, each patient ''exhibited multiple instances of'' such red flags as obtaining controlled substances from multiple doctors, obtaining duplicate controlled substances to treat the same indication, and seeking early refills, *i.e.,* filling a prescription or seeking a refill when the patient should still have medication left from a prior dispensing. *Id.* at 3. Dr. Sullivan thus concluded that ''any reasonable and prudent pharmacist would have caught this behavior and refused to dispense controlled substances to'' the six patients. *Id.*

For example, TA, who filled all but three of her prescriptions at either Grider #1 or Grider #2, obtained prescriptions from twelve different prescribers including dentists, oral surgeons, pain clinic doctors, a psychiatrist, and a nurse practitioner. The record is replete with instances in which even though TA had recently received controlled substances (and more specifically schedule II (fentanyl and Endocet) and III narcotics (hydrocodone), which provided lengthy supplies (25 to 30 day supplies), TA obtained more prescriptions for the same or a similar drug which Respondents filled notwithstanding that she should have had ample medication left from her previous prescription. This pattern occurred over and over. *See* GX 66, at 4 (Expert noting that it occurred eleven times in a ten-month period). Moreover, even if TA had legitimate dental problems which caused pain, Dr. G, a dentist who treated TA (who was called by Respondent), testified that he would not have prescribed hydrocodone even on a short-term basis if he had known that TA had recently obtained narcotics from pain doctors. Tr. 4467, 4478–80, 4520. Dr. G also testified that he was never called by Grider #1 regarding any of the prescriptions TA was receiving from other practitioners.[80] *Id.* at 4520.

Tonya Moses, a pharmacist and former employee of Respondents who also testified on their behalf, acknowledged that Grider #1 had filled hydrocodone prescriptions from a dentist which overlapped with even stronger hydrocodone prescriptions TA received from a pain management doctor. Ms. Moses further admitted that these prescriptions were not justified and involved therapeutic duplication and that it was ''incumbent upon a pharmacist to verify with the doctor if he sees multiple physicians prescribing, basically, the same medication.'' *Id.* at 4214. And upon being shown TA's prescription profile, Dr. M, another of Respondents' witnesses, acknowledged that TA's pattern of drug use and seeing different doctors ''would be a matter of major concern'' and ''probably'' was ''a doctor-shopping situation.'' *Id.* at 5364–65. Yet Grider #1's pharmacists did not even call the prescribers.

Dr. Sullivan further noted that in addition to such narcotics as hydrocodone and Endocet, TA was also obtaining alprazolam and carisoprodol, ''which are known to be heavily abused.'' GX 66, at 4. Accordingly, I agree with Dr. Sullivan's conclusion that ''any reasonable and prudent pharmacist would have determined that [TA] was either abusing and/or diverting these controlled substances.'' *Id.* I further conclude that substantial evidence supports a finding that Respondents violated their corresponding responsibility in dispensing controlled substances to TA.[81] 21 CFR 1306.04(a).

With respect to RB, the evidence shows that in a twenty-eight month period, she filled 172 controlled substance prescriptions at Respondents, with all but seven being filled at Grider #1. RB's prescriptions were written by two doctors, and were for hydrocodone tablets, alprazolam, and various narcotic cough syrups.

Regarding the latter medications, the Government's Expert gave unrefuted testimony that these drugs are intended for short-term relief of cough and that clinical guidelines were changed in 2006 (before any of the prescriptions at issue were dispensed) to ''strongly discourage the use of any type of cough

[80] TA herself admitted she did not tell the various dentists she saw about the controlled substance prescriptions she was obtaining from her pain management doctor. Tr. 3915–16.

[81] Respondents took exception to the ALJ's conclusion that any evidence as to TA's medical conditions is ''irrelevant'' because there is no evidence that any pharmacist at Grider #1 was aware of her conditions at the time the prescriptions were filled. Resp. Exceptions, at 10 and 22 (citing ALJ at 31 n.12). However, even if Leon Grider was aware of TA's medical condition, there is unrefuted evidence that even where a patient may have a medical condition warranting the prescription of controlled substances, a pharmacist has a duty to determine whether filling a prescription will result in therapeutic duplication and to take appropriate action. Notably, Respondent's witness Ms. Moses testified that she had reviewed the prescriptions of the various patients whose prescriptions were the subject of the Immediate Suspension Order, and while Ms. Moses offered testimony as to why various prescriptions were filled for some of the patients, she offered no testimony regarding any notations on TA's prescriptions establishing that Leon Grider (or other any other pharmacist) notified the prescribing physician that TA was receiving controlled substances from other prescribers. In addition, while Respondents entered into evidence TA's prescriptions, none of them contain a notation that the pharmacist (whether Leon Grider or someone else) had called TA's prescriber. *See* RX 120D. Moreover, Ms. Moses admitted that Grider #1 had filled prescriptions for TA that were unjustified. Tr. 4202–03. I therefore reject this exception.

suppressant in treating any type of cough.'' Tr. 3419. Yet RB filled approximately 100 such prescriptions (for a total of 15,000 ml of the drugs) at Respondents during the period and was obtaining the prescriptions from two doctors. Tr. 3419–21; GX 66, at 4; GX 53, at Tab C. Moreover, in addition to receiving the narcotic cough syrups, RB also filled at Respondents prescriptions for hydrocodone tablets, which she also was obtaining from the two doctors.

In other instances, Respondent filled prescriptions for hydrocodone tablets issued by one doctor, even though RB should still have had a large amount of hydrocodone tablets from a thirty-day prescription she had recently filled which was issued by another doctor. Finally, the evidence also shows that RB obtained early fills or refills of prescriptions for hydrocodone tablets, narcotic cough syrups, and alprazolam, even when the prescriptions had been written (or authorized pursuant to an earlier prescription issued) by a single doctor. Indeed, many of the dispensings were more than five days early, and some were as much as nine to twelve days early.

RB testified that no one at Grider Drugs had ever talked to her about her medications or questioned her about her prescriptions. Tr. 4676, 4688–89. Moreover, while Eric Grider, the pharmacist in charge at Grider #2, where RB filled most of her prescriptions, testified that narcotic cough syrups could be prescribed on a long-term basis for COPD or chronic coronary disease with a cough, he subsequently admitted that he did not know whether RB had either condition and had never asked her doctors if she had either condition. *Id.* at 3673. As for Eric Grider's self-serving testimony that even though RB was obtaining medications from two doctors, he did not see any potential for abuse or misuse of them by her;2 Grider eventually conceded that he should have contacted her doctors to ensure that each was aware that the other was also prescribing to her.[82]

Dr. Sullivan concluded that RB's behavior clearly indicated that she was either abusing and/or diverting controlled substances and that this ''should definitely have been caught by the pharmacist.'' GX 66, at 4. He further noted that RB was obtaining duplicate therapy [83] (in that she was obtaining both narcotic cough suppressants and hydrocodone tablets), and with respect to the Xanax, he concluded that ''[n]o reasonable and prudent pharmacist would fill Xanax prescriptions this early on so many occasions.'' *Id.* at 5. I agree with Dr. Sullivan's conclusions and I further conclude that substantial evidence supports a finding that Respondents violated their corresponding responsibility in dispensing controlled substances to RB. 21 CFR 1306.04(a).

As to JB, the evidence shows that during an eight-month period, Grider #2 repeatedly filled prescriptions for alprazolam and diazepam, which are both benzodiazepines, which she obtained from two doctors. The evidence further shows that Grider #2 frequently did this within days of having filled a previous prescription, and that it even filled (or refilled) prescriptions JB presented for both drugs on the same day. Moreover, during the eight-month period covered by JB's prescription profile, Grider #2 dispensed eight alprazolam prescriptions, each for a thirty-day supply, as well as nine diazepam prescriptions, each being for a twenty-day supply, and thus provided 420-days' supply of these drugs during the period.

Regarding JB, Eric Grider offered the self-serving testimony that JB's prescriptions did not raise a red flag and that they were not a large number given the number of days' supply they provided. Tr. 3613, 3615. However, Grider offered no further explanation as to why it was appropriate to dispense 420-days' worth of alprazolam and diazepam during the eight-month period when these drugs are prescribed for the same indication.

Moreover, Dr. Sullivan observed he could not ''think of any clinical reason why a patient would be using these two drugs at the same time for a period of seven months'' and that ''[a]ny reasonable and prudent pharmacy would not have filled prescriptions for these two medications to be taken at the same time.'' GX 66, at 5. Dr. Sullivan further explained that ''[t]his is an obvious sign of either prescription drug abuse and/or diversion.'' *Id.* I agree with Dr. Sullivan's conclusions and hold that substantial evidence supports a finding that Respondents violated their corresponding responsibility in dispensing controlled substances to JB. 21 CFR 1306.04(a).

As for JR, it is undisputed that JR had been taking painkillers for a back injury for a lengthy period of time and that he had been recently diagnosed with colon cancer and had undergone various procedures, including a colon re-section, and was undergoing chemotherapy. However, while these were undoubtedly serious medical conditions which could cause pain and warrant the prescribing of controlled substances, Respondent Grider #1 filled prescriptions JR was simultaneously obtaining from multiple doctors for narcotics including OxyContin and hydrocodone.

It is acknowledged that Ms. Moses offered credible evidence explaining why several of the short-term prescriptions were filled, as well as why two of the OxyContin prescriptions had been filled early. Moreover, even assuming (as Ms. Moses testified) that the refill request form which Dr. W's office faxed into Grider #1 establishes that Dr. W was aware that JR was taking OxyContin for pain control, it does not explain why Respondents also filled prescriptions for both OxyContin and hydrocodone which JR was obtaining from Drs. K (his surgeon) and B (a pain management specialist) at the same time he was also obtaining hydrocodone from Dr. W.

With respect to JR's OxyContin and hydrocodone prescriptions, Dr. Sullivan noted that while ''on rare occasions, cancer patients will use a second narcotic like hydrocodone for break-through pain on an 'as needed basis' for a short-term period[,] [t]he same doctor would write prescriptions for both.'' GX 66, at 6. As Dr. Sullivan then explained, ''[t]his is a major red flag that the patient was receiving hydrocodone prescriptions from three different doctors and OxyContin from two different doctors at the same time. Any reasonable and prudent pharmacist would have caught this and not filled these prescriptions.'' *Id.* In addition, Dr. Sullivan noted that ''[o]f the thirty-three controlled substance prescriptions filled'' by Grider #1, ''at least eleven times the pharmacy filled the medication too early.'' *Id.*

[82] Grider also asserted that he had no way of knowing whether RB was a doctor shopper because Respondents did not have an account with KASPER. I note that Dr. Sullivan offered no testimony as to whether the standards of pharmacy practice in either Kentucky (or nationally) require that a pharmacist use an available prescription monitoring database where one is available. Thus, I place no weight on Leon or Eric Grider's failure to run KASPER reports on any of the six patients.

While Grider also asserted that because RB did not have insurance, he had no way of knowing whether she was filling prescriptions at other non-Grider stores, Tr. 3602, I note that Grider did not even check to see what prescriptions RB filled at the other Grider stores.

[83] As explained in footnote 52, while Dr. P provided an unsworn statement that RB had ''a legitimate reason to take pain medicine,'' he offered no explanation as to why she needed to obtain narcotics from another doctor. Nor did he explain what condition RB had that warranted the long-term prescribing of narcotic cough syrups or alprazolam. Indeed, Dr. P corroborated Detective Hammond's statement that he did not know RB was seeing another physician until April 2010.

Dr. Sullivan thus concluded that the ''duplicate therapy with both hydrocodone and oxycodone (OxyContin) from more than one prescriber is a clear indication of drug abuse and/or diversion and any reasonable and prudent pharmacist would have detected this.'' [84] *Id.* Accordingly, while JR had a serious medical condition for which the prescribing of controlled substances was warranted, I conclude that substantial evidence supports a finding that Grider #1 violated its corresponding responsibility in dispensing multiple prescriptions for these drugs to him. 21 CFR 1306.04(a).

The evidence with respect to CR shows that between November 2007 and early April 2010, he filled at Respondents approximately 163 prescriptions for such drugs as Demerol, hydrocodone/apap tablets, various narcotic cough syrups, and alprazolam. While CR asserted that he had a back injury, the evidence shows, throughout the period, that while he received prescriptions from Dr. C for 120 tablets of Vicodin 5/500mg (a thirty-day supply), which he filled at Grider #1, he also filled an additional 49 prescriptions for twenty tablets of hydrocodone 7.5/650, which he obtained from Dr. P. Notably, CR filled all but two of Dr. P's hydrocodone prescriptions at Grider #2. In addition, on multiple occasions, CR filled prescriptions for both hydrocodone tablets and narcotic cough suppressants.

In addition, CR obtained 64 alprazolam prescriptions and refills, each being authorized by Dr. P and providing a thirty-day supply. All but seven of these were filled at Respondents, and while CR eventually started filling some of the alprazolam prescriptions at another pharmacy, he did not do so until late April 2009. The evidence further shows that on numerous occasions, Respondents filled or refilled an alprazolam prescription within days of having filled or refilled a prescription for the drug. As found above, CR obtained a total of 1,920 days' supply of alprazolam in a period lasting approximately 900 days.

CR admitted that he did not tell Dr. P that he was also getting controlled substances from Dr. C, and claimed that Dr. P did not ask him. Tr. 4029. Moreover, CR admitted that he never told Dr. C that he was also receiving controlled substances from Dr. P. *Id.* at 4039.

Eric Grider admitted that he did not talk to Dr. P about CR. Moreover, he then offered the self-serving testimony that because CR was a cash-paying patient, he was unaware that CR was filling prescriptions at other pharmacies; indeed, Grider raised the ostrich defense, claiming that he ''had no reason to'' even check to see if CR was filling prescriptions at Grider #1. *Id.* at 3619.

Most remarkably, Grider offered the patently disingenuous testimony that he was unaware of unauthorized refills which occurred at Grider #2, notwithstanding that on February 1, 2008, it filled a new alprazolam prescription even though it had refilled a prescription for the drug the day before. GX 56, Tab C, at 2. Moreover, on April 30, 2008, Grider #2 dispensed a new alprazolam prescription even though it had dispensed a refill of a previous alprazolam prescription six days earlier, and on April 28, Grider #1 also filled an alprazolam prescription for CR. *Id.* Thus, early on in the period covered by the spreadsheet, Eric Grider had reason to know that CR was engaged in either drug abuse or diversion. Yet Eric Grider failed to question CR's doctors to determine if they knew that other doctors were also prescribing to him and could not even be bothered to check to see whether CR was filling prescriptions at Grider #1.

As Dr. Sullivan noted, ''in multiple instances,'' CR filled alprazolam prescriptions ''early at both pharmacies,'' and did so approximately fourteen times, with some of the refills occurring as much as ''twenty-nine days too early.'' GX 66, at 7. As Dr. Sullivan further explained, ''a reasonable and prudent pharmacist would never have filled these alprazolam prescriptions as early as the Grider pharmacies did. This shows a pattern of either abuse and/or drug diversion.'' *Id.* I agree with Dr. Sullivan's conclusions and hold that substantial evidence supports a finding that Respondents violated their corresponding responsibility in dispensing controlled substances to CR.[85] 21 CFR 1306.04(a).

With respect to SR, the evidence shows that during a period of less than seven months, she filled twenty-four controlled substance prescriptions at Grider #2 for hydrocodone, oxycodone, and clonazepam. Five of the hydrocodone prescriptions and one oxycodone prescription were issued by Dr. H, an orthopedic surgeon; eight were issued by Dr. S, a family practitioner; one by NP H, who was in the same practice as Dr. S, and one by Dr. M, who was a dentist. More specifically, on October 5, SR filled a prescription issued by Dr. S for 42 hydrocodone 5/500, this being a fourteen-day supply; on October 13, she filled a prescription from Dr. M for twelve hydrocodone 7.5/650, this being a three-day supply; and on October 21, she filled a prescription issued by NP H for another 42 hydrocodone, also a fourteen-day supply.

Other evidence shows that on October 8, 2009, SR had a tooth extracted and that she was prescribed the hydrocodone for post-operative pain. However, SR's dental records contained no indication that she had reported her use of hydrocodone to Dr. M.

SR's prescriptions in March and April 2010 provide more convincing evidence that she was engaged in doctor-shopping. Specifically, on March 8, 2010, Dr. S (her family doctor) prescribed 90 tablets of hydrocodone 5/500, a thirty-day supply, and on April 8, Dr. W (who replaced Dr. S as her family doctor but was in the same office) prescribed her another 90 tablets. Moreover, on March 10, 18, and 27, as well as April 1 and 23, SR filled prescriptions issued by Dr. H, each being for thirty tablets of hydrocodone 7.5/500.

Detective Hammond interviewed Drs. H, M, S, and W, each of whom told Hammond that they would not have prescribed controlled substances to SR if he/she had been aware that SR was obtaining controlled substances from another physician. Drs. S and W further told Hammond that SR was subject to a pain management contract pursuant to which SR could not obtain controlled substances from another physician without prior authorization. In addition, Dr. H stated that if he had known that SR was receiving controlled substances from Dr. S, he would have contacted Dr. S to ensure that they were not issuing overlapping prescriptions.

By contrast, SR, who testified that she had undergone surgeries on both her elbow and shoulder, testified that she told the admitting nurse prior to a surgery performed by Dr. H that she was taking hydrocodone fives, thus suggesting that Dr. H knew that she was obtaining controlled substances from

[84] As Detective Hammond found in reviewing JR's patient file, there is other reliable evidence establishing that JR engaged in drug abuse and/or diversion. *See supra* n.60. Moreover, as found above, JR admitted to sharing his medications with others. While a pharmacist would not have this information, Respondent did have evidence that JR was obtaining prescriptions for the same drugs from multiple doctors and yet chose to fill the prescriptions anyway.

[85] Upon being shown the evidence that CR had filled a prescription for twenty-eight tablets of hydrocodone only six days after filling a prescription for 120 hydrocodone tablets, Ms. Moses, who testified on behalf of Respondent, stated that she would have called the physician to let her know of the overlapping prescription. Tr. 4429.

her family doctor.[86] Tr. 4721. However, in her decision, the ALJ did not address whether she found SR's testimony, which was vague as to the date of the incident, credible.

In any event, I conclude that it is not necessary to resolve this dispute because Eric Grider acknowledged that SR's prescriptions involved therapeutic duplication and he did not recall having called either Dr. H or Dr. W. Indeed, Grider denied having any obligation to call SR's prescribers, asserting that such contact was ''a courtesy'' and that he fulfilled his obligation if he counseled a patient as to the appropriate manner in which to take the drugs. However, SR testified that she was neither questioned by anyone at Grider #2 about her prescriptions nor counseled as to how to take the medications.

As Dr. Sullivan testified, when confronted with evidence of red flags, there are several things a pharmacist can do, including having an extensive conversation with the patient, calling the physician, or refusing to fill the prescription. *Id.* at 3448–49. However, with respect to SR, Eric Grider did none of the above. Indeed, as Dr. Sullivan testified, it is clear that Respondents did not do prospective DUR with respect to any of the six patients even though this is required by the Kentucky Board of Pharmacy's rules. *Id.* at 3453–54. I therefore conclude that substantial evidence supports a finding that Grider #2 dispensed controlled substances to SR in violation of 21 CFR 1306.04(a).

I further hold that Respondents' dispensing violations are egregious and provide further support for the conclusion that each has committed acts which render its registration ''inconsistent with the public interest'' and thus support the revocation of its registration.[87] 21 U.S.C. 824(a)(4).

The Audits

As found above, DEA Investigators performed two audits of Respondents' handling of controlled substances. However, the Government conceded that the first audit was flawed because it included both purchases and distributions which occurred outside of the audit period. While the supervisory DI performed a second audit on a limited number of controlled substances, this audit was also flawed because it relied on KASPER data (notwithstanding that Kentucky does not guarantee the accuracy of the data, Tr. 2335, and KASPER reports contain this caveat, *id.* at 2337), rather than the dispensing records which Respondents are legally required to maintain under the CSA and DEA regulations to determine the quantities of drugs which they dispensed.

Recordkeeping is one of the CSA's principal tools for preventing the diversion of controlled substances. *Paul H. Volkman,* 73 FR 30630, 30644 (2008). Under the Act, ''every registrant * * * dispensing a controlled substance or substances shall maintain, on a current basis, *a complete and accurate record* of each such substance * * * received, sold, delivered, or otherwise disposed of by him.'' 21 U.S.C. 827(a) (emphasis added). I have further explained that ''a registrant's accurate and diligent adherence to [its recordkeeping] obligations is absolutely essential to protect against the diversion of controlled substances.'' *Volkman,* 73 FR at 30644.

One of the purposes of performing an audit is to assess a registrant's level of compliance with the CSA's recordkeeping requirements. Thus, using data from a non-CSA required record rather than CSA required records, cannot, by definition, provide an accurate picture as to the adequacy of a registrant's compliance with section 827.[88] That error is compounded where, as here, the source of the data expressly disclaims any guarantee that its data is accurate and it is unclear to what degree the reports are accurate. Indeed, the DI acknowledged that he had ''no idea how accurate'' the KASPER data was. Tr. 622. Thus, this audit was also flawed.

Nonetheless, I agree with the ALJ's conclusion that the results of the ''consultation examination'' performed by Stivers and Associates provide substantial evidence that Respondents cannot account for significant quantities of various controlled substances and thus have violated section 827. ALJ at 85–87. Indeed, the shortages and overages that Stivers found at each of the Grider stores are stunning and establish that Respondents have committed egregious recordkeeping violations and likely diverted thousands of dosage units (d.u.) of controlled substances.

As found above, Grider #1 had shortages of the following benzodiazepines: 2,316 d.u. of alprazolam, 6,372 diazepam, and 2,191 lorazepam. With respect to the narcotics it handled, Grider #1 had shortages of 28,097 d.u. of hydrocodone, 462 Duragesic (fentanyl) patches, 500 Lorcet, 375 Lortab, 214 Endocet, and 200 Vicodin. Grider #1 also had overages of 7,568 clonazepam, 3,025 methadone, 1,751 phentermine, 1,335 oxycodone, 514 Stagesic, and 262 OxyContin.

Grider #2 had shortages of 17,875 d.u. of OxyContin, 8,135 hydrocodone, 3,207 methadone, 3,203 phentermine, 2,013 Stagesic, 1,253 lorazepam, 428 Ambien, and 290 Duragesic. It also had overages of 8,615 clonazepam, 2,787 diazepam, 662 Valium, 619 Lorcet, 425 Endocet, 342 Lortab, and 109 Vicodin.

Moreover, even after combining the shortages and overages for all three stores, Respondents had shortages of 1,496 alprazolam, 7,329 diazepam, 4,928 lorazepam, 605 Duragesic (fentanyl) patches, 35,418 hydrocodone, 16,998 OxyContin, and 2,791 phentermine. Respondents also had overages of 31,951 clonazepam, 15,747 methadone, 1,051 Lorcet, 900 oxycodone, 889 Lortab, 871 Endocet, and 872 Valium.[89] As explained in my findings of fact, under the CSA, Respondents are required to maintain accurate and complete records for each registered location and for each finished form of a drug.

In their Exceptions, Respondents contend that its audit ''was not presented as a final and accurate audit

[86] SR also testified that she did not tell her family practitioner about the prescription she had obtained from her dentist ''because it was in between visits when I got the ones from'' the dentist. Tr. 4722. The Government also asked SR whether she told Dr. W that she was receiving controlled substances from Dr. S; SR, who was apparently confused by the question, testified that she told Dr. W that she had gotten pain medicine after her surgery. *Id.* at 4723. However, as noted above, Drs. S and W were both family practitioners who worked at the same office.

[87] Respondents further contend that the Government was ''only able to identify these six instances of what [it] alleges to be 'doctor shopping.' '' Respondent Exceptions, at 21. Suffice it to say that the Government's evidence is more than enough to sustain the allegations, given that several of the patients demonstrated a sustained pattern of obtaining prescriptions for similar drugs issued by different prescribers or presenting numerous early refills.

Respondents also contend that because Dr. Sullivan based his conclusions ''by looking only at the prescription patterns'' of the patients and testified that he was generally unaware of their medical conditions, this does not constitute substantial evidence of doctor-shopping. *Id.* at 21–22 & n.3. However, with respect to several of the patients, several of Respondent's witnesses acknowledged that the prescription patterns were indicative of doctor-shopping. Indeed, even Eric Grider conceded (albeit, grudgingly) that CR was a doctor shopper; he also acknowledged that he should have called RB's and SR's prescribers.

[88] This is not to say that using other data sources would be inappropriate in all cases. For example, if sizeable portions of a registrant's dispensing records are missing, use of data or records from a non-CSA source would be justified to determine whether diversion is occurring. Of course, in such a case, it would already be clear that the registrant had failed to comply with its recordkeeping obligations. However, in this case, there is no evidence that either of the Respondents was missing any dispensing records.

[89] To make clear, under section 827, each registrant is required to maintain complete and accurate records. While I discuss the combined figures for all three stores, as found above, each of the Grider stores could not account for massive quantities of controlled substances.

of the period in question'' but ''was presented to demonstrate that the DEA audit was not reliable.'' Exceptions at 5. Mr. Hicks, however, testified at length as to the procedures his firm employed in performing its examination and it is clear that those procedures provided an accurate result. For example, while Respondents argue that Mr. Hicks ''did not review some prescriptions when he performed the audit,'' his report stated that he tabulated the quantities of the dispensings from the Respondents' pc V computer software system Narcotic and Controlled Substances Drug Sales Report, a record which constitutes a dispensing record for purposes of the CSA. *See* RX 101, at 63.

Because Registrants are required to maintain the dispensing records under federal law and Agency regulations, and those records are required to be ''complete and accurate,'' 21 U.S.C. § 827, an audit is not rendered invalid because the hard copy prescriptions were not reviewed. Indeed, in performing audits, DEA personnel typically review only the dispensing log to determine the respective quantities of the various controlled substances which have been distributed.

Equally unpersuasive is Respondents' claim that the Stivers' results were skewed by ''an inaccurate beginning inventory.'' Exceptions, at 5. As Mr. Hicks explained in his report, his firm ''used the same beginning inventory [May 31, 2003] as the DEA did.'' RX 101, at 62. However, the evidence shows that the beginning inventories which DEA used were actually inventories which Respondents had themselves performed. Thus, if the beginning inventories used by Mr. Hicks's firm were inaccurate, it is because Respondents themselves did not take accurate inventories. Moreover, Mr. Hicks was adamant that the ending inventories were reliable, Tr. 2095, and that he had relied on ''source documentation,'' *i.e.,* records provided by the companies that sold controlled substances to Respondents to determine their purchases. *Id.* at 2102.

Thus, it is patently disingenuous for Respondents to now assert that their own audit is not reliable. And as explained above, each DEA registrant is required to maintain complete and accurate records for each controlled substance it handles. Thus, the testimony of Mr. Hicks that when all the controlled substances are added up across all three stores, the audit shows an overage of 644 pills, which in his view is immaterial, is utter nonsense. Rather, the audit reflects an abject failure on Respondents' part to comply with the CSA's record keeping requirements and gives substantial credence to the Government's contention that Respondents were engaged in massive diversion. This provides further reason to conclude that Respondents have committed acts which render their registrations ''inconsistent with the public interest.'' 21 U.S.C. 824(a)(4).

Other Violations

As explained above, a principal component of the Government's evidence in support of many of the remaining allegations was data or reports obtained from KASPER. However, because the Government did not obtain a court order, it cannot rely on that evidence in this proceeding. Nonetheless, a few of the allegations were proved by substantial evidence.

For example, in several instances, the Government produced copies of labels for various prescriptions which were dispensed and yet they could not find either the original signed prescriptions or a called-in prescription which authorized the dispensing. These included prescriptions for hydrocodone (*see* GX 15, at 4; Tr. 422) and Xanax (GX 16, at 6; Tr. 442). As explained previously, under 21 U.S.C § 829 and 21 CFR 1306.21(a), a pharmacist may dispense controlled substances (in schedules III through V) ''only pursuant to either a written prescription signed by a practitioner or a facsimile of a written, signed prescription transmitted by the practitioner or the practitioner's agent to the pharmacy or pursuant to an oral prescription made by an individual practitioner and promptly reduced to writing by the pharmacist.'' 21 CFR 1306.21(a). Moreover, a pharmacy is required to maintain the prescription for a period of two years.[90] 21 U.S.C. 827(b); 21 CFR 1304.04 (a) & (h).

In addition, the record contains substantial evidence (apart from KASPER data) that Leon Grider provided an unauthorized refill of a Lortab (hydrocodone) prescription to BW. *See* GX 30; GX 70; Tr. 3040, 3050–52, 3054–55. Dr. CS, BW's physician, testified that BW wanted to get off of Lortab and that she was tapering BW off of the drug and had authorized no refills. Nonetheless, Leon Grider provided refills to BW, thus interfering with the clinical judgment of Dr. CS. It is manifest that Grider's action is outrageous and threatened the safety of BW.

The Government further established that a number of the prescription labels Respondent prepared contained the name of a physician other than the one who had actually prescribed the drug. *See* GX 26, at 1–2; 7–8; 9–10. This is a violation of 21 CFR 1306.24(a) (''The pharmacist filling a prescription for a controlled substance listed in schedule III, IV, or V shall affix to the package a label showing the pharmacy name and address, the serial number and date of initial filling, the name of the patient, [and] *the name of the practitioner issuing the prescription * * *.''*) (emphasis added). In addition, other evidence shows that Respondent put false prescription labels on bottles. *See* Tr. 5946, 6095–96, 6126 (testimony by LW) and Tr. 3201, GX 71 (Chief Irvin's testimony and evidence of duplicate pill bottles for BL).

Finally, the Government also established that on several occasions,

[90] Respondents also take exception to the ALJ's finding that they dispensed controlled substances without retaining a hard copy of the prescriptions ''because the only basis for the alleged violations are[sic] the failure of Agent Otero to find the hard copies of the prescriptions in the records he seized'' on August 19, 2004. Resp. Exceptions at 24. Respondents further noted that on November 21, 2005, the State Pharmacy Board seized its prescriptions pursuant to three administrative subpoenas, and that they have been unable to obtain copies of the documents seized by the Pharmacy Board. *Id.*

Respondents thus argue that ''the substantial evidence that the Respondents did not have hard copies of some prescriptions for schedule II drugs was Otero's inability to find those hard copies in the record the DEA seized. There was no evidence presented by the Government that Otero had searched the records seized by the Kentucky Pharmacy Board to determine whether the missing hard copies of the prescriptions in question were there.'' *Id.* at 25.

DI Otero testified, however, that during the search, the Investigators could not find some of the prescriptions, even though under Federal law, Respondents were required to maintain them at the respective registered location. Tr. 213; 671–72. This testimony is more than enough to provide substantial evidence that Respondent could not provide hard copies of various prescriptions. Contrary to Respondents' understanding, the Investigators were not required to conduct a subsequent search to establish this violation, let alone a review of the records seized by another agency more than a year later.

Respondents also contend that because of the ongoing state criminal proceedings against both Leon and Eric Grider, the ALJ ''should not [have] allow[ed] the inability of the Respondents to rebut these alleged violations by providing the requisite hard copies of the prescriptions and call-in scripts carry the day * * * when it is a matter of record that the Respondents have been deprived of their records throughout these proceedings.'' Resp. Exceptions, at 26.

To make clear, DEA did not deprive Respondents of any of their records, but rather allowed them to make copies of the records seized by the Agency. Tr. 214–16. Beyond this, the argument is to no avail because under Federal law and DEA regulations, Respondents were required to have the prescriptions at issue on hand and available on the date of the DEA search. *See* 21 U.S.C. 827(b) (''Every inventory or other record required under this section * * * shall be kept and be available, for at least two years, for inspection and copying by officers or employees of the United States authorized by the Attorney General.''); *see also* 21 CFR 1304.04(a).

Respondents failed to report thefts of controlled substances to DEA. This is a violation of 21 CFR 1301.76(b), which requires that a registrant ''notify the Field Division Office of the Administration in his area, in writing, of the theft and significant loss of any controlled substances within one business day of the discovery of such loss or theft'' and to complete and submit a written report of the incident on DEA Form 106. However, these violations are relatively minor when compared to the other misconduct proved in this matter.

The Government also contends that Respondents violated Kentucky law by failing to provide complete and accurate information to KASPER. *See* Gov. Post-Hearing Br., at 100–101. However, under Kentucky law, only the knowing or intentional failure to transmit such information is a violation and there is no evidence that the State has undertaken enforcement action against Respondents, let alone held them to be in violation. Indeed, much to the Government's dismay, Mr. Sallengs, the director of KASPER, did not seem particularly troubled by Respondents' various reporting errors and omissions. In light of this, I dismiss this allegation.

Factor Five

In its post-hearing brief, the Government also contends that the findings of an investigation of the Kentucky Medicaid Fraud Division establish that Grider #2 engaged in the billing fraud when it billed Medicaid for drugs that were not actually dispensed including controlled substances. Gov. Post-Hrng. Br., at 92. However, in support of its contention, the Government offered nothing more that the conclusory assertion that ''[f]actor five is also relevant to findings of the investigation of the Kentucky Medicaid Fraud Division that * * * Grider Drug #2 unlawfully billed Medicaid (including transactions involving prescriptions for controlled substances) where prior authorization was not provided.'' *Id.* The Government did not cite any authority for its position.

The ALJ agreed with the Government, reasoning that this conduct constitutes ''[s]uch other conduct which may threaten public health and safety'' because ''[w]hen a registrant clearly engages in conduct involving controlled substances that is untruthful, that registrant creates yet another risk of diversion.'' ALJ at 93–94 (citing *Alexander Drug Company, Inc.,* 66 FR 18299, 18304 (2001); *Nicholas A. Sychak, d/b/a Medicap Pharmacy,* 65 FR 75959,75968 (2000); *Arthur Sklar, d/b/a King Pharmacy,* 54 FR 34623, 34627 (1989)). Based on her finding that Eric Grider and another pharmacist ''reported to Medicaid one medication when they actually dispensed another'' and that ''[t]hese medications included controlled substances,'' the ALJ further explained that ''the prescription check and balance such Medicaid reporting creates was circumvented by this false method of reporting'' and that ''[w]ithout such trust and truthfulness, the system of monitoring the transit of controlled substances falls apart.'' *Id.* at 94.

However, while two of the three cases cited by the ALJ arguably support the proposition that billing fraud constitutes conduct which is actionable under factor five, in both cases the creation of a fraudulent record was clearly part of a scheme to divert controlled substances. For example, in *Alexander Drug,* a pharmacist had dispensed lorazepam to himself ''without a prescription issued by a practitioner in the usual course of professional practice'' and then created a false prescription in his wife's name because her insurance did not require a co-payment. 66 FR at 18301. Likewise, in *Sychak,* there were findings which support the conclusion that the billing fraud was engaged in as part of a scheme to divert drugs. *Id.* at 75965 (noting interview of pharmacy employee that when she reviewed her prescription profile, she ''discovered numerous prescriptions listed as billed to her insurance carrier that were allegedly issued to her by various physicians she had never seen for drugs she had never received'' and that when the employee confronted the pharmacist, he replied: ''How do you think I pay for your health insurance?'').[91]

Most significantly, more than seven weeks before the ALJ issued her decision in this matter, I issued my Decision in *Terese, Inc., D/B/A Peach Orchard Drugs,* 76 FR 46843 (2011). Yet the ALJ failed to even acknowledge *Terese,* let alone explain why it is not controlling.

In *Terese,* the Agency sought, pursuant to its public interest authority, to revoke a pharmacy registration issued to the spouse of a pharmacist, who had opened up a new pharmacy, after her spouse and his pharmacy had been convicted of health care billing fraud. *Id.* Therein, the Government alleged four reasons for doing so: (1) The pharmacy owner's spouse had been convicted of health care fraud and mandatorily excluded from participation in federal health care programs pursuant to 42 U.S.C. 1320a–7(a); (2) that the pharmacy had materially falsified its state Medicaid application; (3) that the pharmacy had failed to provided information that was requested by the state Medicaid program; and (4) that the convicted pharmacist had unlawfully dispensed Medicaid controlled substance prescriptions. *Id.* There was, however, no evidence substantiating the allegation that the convicted pharmacist (and his pharmacy) had committed violations of the CSA. *Id.* at 46846.

In rejecting the Government's contentions, I noted that the CSA, as originally enacted, authorized the revocation of a registration only on the following three grounds: (1) Where a registrant has materially falsified an application for registration; (2) where a registrant has been convicted of a felony related to controlled substances; and (3) where a registrant is no longer authorized by state law to handle controlled substances. *See* 21 U.S.C. 824(a)(1)–(3). I further noted that it was not until 1984 that Congress, having concluded that the existing grounds had proved '''overly limited''' and had '''a severe adverse impact on Federal anti-diversion efforts,''' amended the CSA to add the public interest authority. 76 FR at 46847–48 (quoting H.R. Rep. No. 98–1030, at 266 (1984)).[92] However, in *Terese,* I also noted that Congress did not amend section 824 to grant the Agency authority to revoke the registration of an individual or entity subject to mandatory exclusion by the Secretary of HHS from Medicare or Medicaid until three years after it enacted public interest provisions. *Id.* at 46848 (discussing history of 21 U.S.C. 824(a)(5)).

Moreover, as I explained in *Terese,* under 42 U.S.C. 1320a–7(a), the Secretary's mandatory exclusion is triggered *only* when an individual or entity *has been convicted* of one of four categories of offenses such as for ''program-related crimes,'' which includes, in part, ''a criminal offense related to the delivery of an item or service under * * * 42 U.S.C. §§ 1395 *et seq.* * * * or under any State health care program,'' or ''a conviction 'under Federal or State law, in connection with the delivery of a health care item or service or with respect to any act or omission in a health program * * * operated by or financed by any Federal, State, or local government agency, of a criminal offense consisting of a felony relating to fraud, theft, embezzlement

[91] As for *Sklar,* that case contains no discussion of billing fraud and whether it is actionable conduct under factor five.

[92] The House Report was reprinted in 1984 U.S.C.C.A.N. 3182, 3448.

* * * or other financial misconduct.''' 42 U.S.C. 1320a–7(a) (emphasis added). Accordingly, a person or entity's DEA registration is not subject to revocation under section 824(a)(5) unless he/it has been convicted of an offense falling within one of the four enumerated categories. Notably, section 824(a)(5) does not give the Agency authority to revoke the registration of a person or entity which is subject only to the Secretary's permissive exclusion authority, even though the Medicare/Medicaid exclusion statute contains some sixteen separate grounds for permissive exclusion, many of which involve acts of misconduct which reflect adversely on the truthfulness of the person subject to the exclusion. *See* 42 U.S.C. 1320A–7(b).

In *Terese,* I further explained that under the Government's interpretation of the scope of its authority under the CSA's public interest provisions, there was no need for Congress to enact section 824(a)(5) and that its interpretation would render this provision, and the limitation it imposes, meaningless. 76 FR at 46848. However, as I noted, statutes ''are not to be construed in a manner that renders their texts superfluous.'' *Id.* (citing *Bloate* v. *United States,* 130 S.Ct. 1345 1355 (2010) (quoting *Duncan* v. *Walker,* 533 U.S. 167, 174 (2001) (''[A] statute ought, upon, the whole, to be so construed that, if it can be prevented, no clause, sentence or word shall be superfluous, void, or insignificant.''))). In short, were an allegation that a Registrant has committed Medicaid fraud actionable under factor five of the public interest standard as ''such other conduct which may threaten public health and safety,'' then Congress did not need to amend section 824 by adding subsection (a)(5). Yet not only did Congress amend the statute, it then limited the Agency's revocation authority to those instances in which a registrant has been convicted of a felony enumerated in 42 U.S.C. 1320A–7(a).

In *Terese,* I also explained that where an allegation both implicates a public interest factor (or another of the Agency' revocation authorities), as well as falls within the Secretary's permissive exclusion authority, DEA retains authority to revoke under the applicable authority of section 824. However, as *Terese* makes clear, the Agency cannot disregard clear statutory text and the CSA's history. Thus, even though it is indisputable that committing billing fraud is egregious misconduct, simply overcharging the Government without more does not necessarily threaten ''threaten public health and safety.'' 21 U.S.C. 824(a)(5).

As explained above, the ALJ concluded that Respondent's alleged Medicaid billing falls within factor five because ''the prescription check and balance such Medicaid reporting creates was circumvented by this false method of reporting'' and that ''[w]ithout such trust and truthfulness, the system of monitoring of controlled substances falls apart.'' ALJ at 94.

However, there is no evidence in this proceeding that Medicaid billing records are used to monitor the disposition of controlled substances and whether they are being diverted, and as explained above, the CSA creates its own scheme of recordkeeping to monitor the disposition of controlled substances. Second, to the extent the Government's evidence even constitutes substantial evidence of billing fraud—an issue which need not be decided—there is no evidence that Grider #2's pharmacists engaged in the fraud as part of a scheme to divert controlled substances.

As the KBI agent testified, the fraud involved billing for a drug in the Medicaid formulary when a patient brought in a prescription for a drug which was not covered by the formulary and would require pre-authorization. However, the KBI Agent testified that the patient received the drug that the doctor prescribed. Indeed, while in response to the question of whether the drugs involved controlled or non-controlled substances, the KBI Agent testified that ''[t]hey were across-the-board,'' Tr. 1116, neither the Agent in her testimony, nor any of the Interview Summaries of Respondents' employees, provide any basis for concluding that Respondents engaged in the scheme to facilitate the diversion of controlled substances.

In short, the Government's evidence simply establishes run-of-the-mill billing fraud, without any further proof as to how the fraud threatened public health or safety as required under factor five. Moreover, no evidence was offered that either Eric Grider or Grider #2 has been convicted of health care fraud and is subject to mandatory exclusion from participation in federal health care programs pursuant to 42 U.S.C. 1320a7(a).

This is not to deny the ALJ's well-placed concern that the commission of health care fraud raises a serious question as to the trustworthiness of a registrant. However, with respect to allegations that a registrant has engaged in health care fraud, because the CSA limits the Agency's revocation authority to those instances in which a registrant has been convicted of an offense which subjects it to mandatory exclusion, absent evidence that the fraud was engaged in as part of scheme to divert controlled substances, the CSA clearly contemplates that these allegations are to be litigated in the first instance in federal and state criminal courts, and not in DEA registration proceedings.[93] The allegation is thus not properly considered in this proceeding.

Summary of the Government's Case

As found above, under factors two and four, the Government has proved with substantial evidence numerous violations of the CSA. These include: (1) Leon Grider's distribution of controlled substances either without a prescription or by providing refills which were not authorized by the prescribing physician; (2) Respondents' repeated dispensing of controlled substances to persons who were obviously either engaged in drug abuse or diversion; (3) Respondents' clear inability to account for substantial amounts of the controlled substances they handle; (4) their inability to provide prescriptions for various dispensings; and (5) the creation of false prescription labels. In sum, Respondents (and their principals, Leon and Eric Grider) have committed egregious misconduct which supports the further finding that they have ''committed such acts as would render [their] registration[s] * * * inconsistent with the public interest'' and which supports the revocation of their registrations. 21 U.S.C. 824(a)(4). I further conclude that the allegations underlying the Immediate Suspension Order have been proved by substantial evidence.

Sanction

Where, as here, the Government has made out a *prima facie* case, the burden shifts to the Respondents to '' 'present[ ] sufficient mitigating evidence' '' to show why, notwithstanding that it has committed acts which render its registration inconsistent with the public interest, it can be entrusted with a new registration. *Medicine Shoppe-Jonesborough,* 73 FR 364, 387 (2008) (quoting *Samuel S Jackson,* 72 FR 23848, 23853 (2007) (quoting *Leo R. Miller,* 53 FR 21931, 21932 (1988))), *pet.*

[93] Even where there is evidence that billing fraud was engaged in as a part of a scheme to divert controlled substances, the fraud is, at most, secondary to the diversion and adds little to the Government's case. In this matter, the Government's decision to litigate the issue resulted in at least five days of additional testimony (if not more) and prompted an interlocutory appeal, thus further delaying the resolution of the serious charges raised in this matter. Notwithstanding the importance of the issue to its case (at least as presented at the hearing), the Government's discussion of the allegation produced but a single sentence in its brief.

for rev. denied, Medicine Shoppe-Jonesborough v. *DEA,* 300 Fed. Appdx. 409 (6th Cir. 2008). *See also MacKay,* 664 F.3d at 817.

''Moreover, because 'past performance is the best predictor of future performance,' *ALRA Labs, Inc.* v. *DEA,* 54 F.3d 450, 452 (7th Cir.1995), [DEA] has repeatedly held that where a registrant has committed acts inconsistent with the public interest, the registrant must accept responsibility for its actions and demonstrate that it will not engage in future misconduct.'' *Medicine Shoppe,* 73 FR at 387; *see also Jackson,* 72 FR at 23853; *John H. Kennedy,* 71 FR 35705, 35709 (2006); *Cuong Trong Tran,* 63 FR 64280, 64283 (1998); *Prince George Daniels,* 60 FR 62884, 62887 (1995).

Respondents have utterly failed to rebut the Government's *prima facie* case. With respect to Grider #1, as the ALJ noted, Leon Grider, the pharmacist in charge at Grider #1, and the principal owner of both pharmacies, did not testify in the proceeding.[94] Moreover, Grider #1 produced no evidence as to corrective measures it has undertaken to prevent a re-occurrence of the misconduct it has committed. Thus, Respondent has produced no evidence that it (as well as its owner and pharmacist in charge) accept responsibility for their misconduct and that they will not engage in future misconduct.[95] *Cf. Baxter* v. *Palmigiano,* 425 U.S 308, 319 (1976) (''[T]he Fifth Amendment does not forbid adverse inferences against parties to civil actions when they refuse to testify in response to probative evidence offered against them.'').

While Eric Grider testified regarding the violations committed by Grider #2, he acknowledged that only one of the patients (CR) to whom Grider #2 had unlawfully dispensed controlled substances was engaged in doctor-shopping, and even then, did so grudgingly. Moreover, when taken as a whole, Eric Grider's testimony manifests that he neither accepts responsibility for his misconduct nor has implemented corrective measures to prevent diversion in the future. For example, when confronted with evidence of a patient obtaining prescriptions from multiple doctors, Grider testified that he nonetheless considers calling the prescriber to be a courtesy. As a further example, Grider testified that he would not even check to see if a patient was obtaining controlled substances from his father's store. Finally, Grider offered no evidence as to any remedial measures which have been undertaken at Grider #2. Thus, I conclude that Eric Grider remains utterly indifferent as to the scope of his and Grider #2's obligations under both Kentucky and Federal law to prevent the abuse and diversion of controlled substances. Accordingly, I conclude that Respondents have failed to rebut the Government's case.

Respondents nonetheless argue that I should reject the ALJ's conclusions that because Leon Grider did not testify, there is no evidence that he is remorseful or has implemented any corrective measures. Resp. Exceptions at 6. Noting that they made ''repeated efforts to stay this proceeding,'' Respondents argue that because Leon Grider was under two state court indictments at the time of this hearing, the ALJ should have stayed this proceeding until the conclusion of the two state criminal cases so as not to '' 'undermine the party's Fifth Amendment privilege against self-incrimination.' '' *Id.* at 8–9 (quoting *SEC* v. *Dresser Industries, Inc.,* 628 F.2d1368, 1375–76 (D.C Cir. 1980)).[96]

Respondents acknowledge that '' 'as a general matter, due process is not infringed merely because an accused person is subjected, without his consent, to an administrative hearing concerning matters involved in a pending criminal proceedings.' '' *Id.* at 9 (quoting 628 F.2d at 1376 n.21). However, Respondents point to *Dresser Industries'* further dictum that ''an administrative proceeding can in some circumstances prejudice the rights of a citizen or the government,'' and that '' '[i]n such cases the agencies and courts may have a duty to take appropriate correction action.' '' *Id.* Thus, they argue that Leon Grider's decision ''not to testify in this proceeding should not be used against the Respondents in any way in these proceedings,'' and that ''having declined to continue these proceedings despite Leon Grider facing two pending state criminal indictments, this tribunal cannot in turn penalize Leon Grider for declining to testify in this hearing.'' *Id.*

Respondents' argument gives no reason to reject the ALJ's conclusions.[97] The Fifth Amendment protects a witness only from being compelled to testify against himself. Notably, the Government did not call Leon Grider as a witness, and in any event, the Fifth Amendment privilege is not ''a sword whereby a claimant asserting the privilege [is] freed from adducing proof in support of a burden which would otherwise have been his.'' *United States* v. *Rylander,* 460 U.S 752, 758 (1983). *See also MacKay,* 664 F.3d at 820 (quoting *Keating* v. *Office of Thrift Supervision,* 45 F.3d 322, 326 (9th Cir. 1995)).

As explained above, it is settled that where the Government has established a *prima facie* case, ''the burden shifts to the [registrant] to show why [its] continued registration would be consistent with the public interest.'' *MacKay,* 664 F.3d 817 (citing cases). Because Respondents have failed to rebut the Government's *prima facie* case, I will revoke the existing

[94] The Government did not call Leon Grider to testify; nor did he testify on Respondents' behalf.

[95] Other evidence, while not essential to reach this conclusion, supports this finding. Specifically, the evidence shows that even though Leon Grider was aware that he was under investigation, he continued to unlawfully distribute controlled substances to persons such as LW and BL.

[96] On June 4, 2008, Respondent filed a motion ''to stay the proceedings until after October 10, 2008, the date Leon Grider's Kentucky State Court Trial is presently scheduled to conclude.'' Therein, Respondents ''stipulated and agreed that any continuance of the Russell Circuit Court trial beyond October 10, 2008 will not be a basis to extend the stay of proceedings, should the Administrative Judge grant this motion and order the requested stay of proceedings.'' Motion for Stay, at 3. Having made this representation, Respondents cannot now complain that the ALJ eventually lifted the stay.

[97] As *Dresser Industries* notes, ''[t]he civil and regulatory laws of the United States frequently overlap with the criminal laws creating the possibility of parallel [administrative] and criminal proceedings, either successive or simultaneous'' and that ''[i]n the absence of substantial prejudice to the rights of the parties involved, such parallel proceedings are unobjectionable.'' 628 F.2d at 1374. As the D.C. Circuit observed: ''[t]he Constitution * * * does not ordinarily require a stay of civil proceedings pending the outcome of criminal proceedings.'' *Id.* at 1375.

While the D.C. Circuit further explained that ''the strongest case for deferring civil proceedings is where a party under indictment for a serious offense is required to defend a civil or administrative action involving the same matter,'' the potential harm to a party's Fifth Amendment privilege is just one of four reasons which may justify staying the noncriminal proceeding. *Id.* at 1375–76. Continuing, the court explained that ''[i]f delay of the noncriminal proceedings *would not seriously injure the public interest,* a court may be justified in deferring it.'' *Id.* (emphasis added).

It is, of course, commonplace that matters involving DEA registrants will lead to both a revocation proceeding and a criminal investigation and subsequent charges at either the federal or state level. Moreover, the very purpose of a proceeding brought under 21 U.S.C. 823(f) and 824(a)(4) is to protect the public interest.

Here, it is noted that the ALJ did stay the proceeding for approximately nine months (between June 2008 and March 2009). Moreover, even after the stay was lifted, the actual hearing did not commence until August 11, 2009, five months later, and Respondents did not start putting on their case until December 2009. At that point, the two criminal cases against Leon Grider had been pending since August 2005, and thus for more than four years.

It is further noted that during the period of the stay, Respondents continued diverting controlled substances. Thus, the delay of this proceeding did cause serious injury to the public interest. As this case demonstrates, under *Dresser,* a stay of a DEA revocation proceeding brought under section 824(a)(4) is unlikely to ever be justified.

registration of Grider Drug #1 and deny the pending application of both Grider Drug #1 and Grider Drug #2.[98]

[98] Respondents further contend that an email from the supervisory DI to the DI he initially assigned to conduct the investigation, evidences ''bad faith or malicious government tactics'' and that the tribunal therefore has ''a duty to take appropriate corrective actions'' to ensure that Leon Grider's decision not to testify, because of the two state criminal cases, is not used against Respondents ''*in any way.*'' Resp. Exceptions at 10 (citing RX 103) (emphasis added).

In support of their contention, Respondents quote the following paragraph from an email the supervisory DI wrote to his subordinate, who had expressed concern as to whether she could handle the matter:

All we need to do with [Leon Grider] is document how many scripts are bad for possible criminal sanctions, how many civil violations he has for nonconformance and a fine, and what we intend to do when we have the full picture (revocation/suspension/etc.). It will just take a while, that's all. He got off the hook before. We will not give him the opportunity this time. We cannot cut corners with him. We will drown him in violations. The more concrete the violation, the better.

Id. (quoting RX 103).

This email does not even remotely establish bad faith or malicious intent on the part of the supervisory DI. Indeed, in a subsequent portion of the email, the supervisory DI told his subordinate to ''look[] for bogus scripts, unauthorized refills, and failure to comply with prescriptions requirements, such as refilling schedule II's,'' each of which constitutes a violation of the CSA. RX 103. He then instructed her ''to be methodical. Pick a doctor with lots of scripts and question them. Record the bad ones and write a report. Look at whether any of these were filled early per KASPER, per early refill book, that would confirm fraudulent reporting.'' *Id.*

Notably, nowhere did the supervisory DI instruct his subordinate to find violations even in the absence of probable cause or to violate Leon Grider's constitutional rights. And ultimately, Respondents were allowed to test the Government's evidence with respect to every violation of the CSA which it alleged. Likewise, each of the two state criminal proceedings was initiated by indictment, which requires a finding of probable cause.

I therefore reject Respondent's contention that it was improper for the ALJ to rely on Leon Grider's silence in concluding that Respondents had not rebutted the Government's *prima facie* case.

Order

Pursuant to the authority vested in me by 21 U.S.C. 823(f) and 824(a)(4), as well as 28 CFR 0.100(b), I order that DEA Certificate of Registration AG3498347, issued to Grider Drug #1, be, and it hereby is revoked. I further order that any pending applications of Grider Drug #1 and Grider Drug #2, be, and they hereby are, denied. This Order is effective immediately.[99]

Dated: July 13, 2012.

Michele M. Leonhart,

Administrator.

[FR Doc. 2012–17973 Filed 7–25–12; 8:45 am]

BILLING CODE 4410–09–P

[99] Based on the extensive and egregious acts of diversion proved on this record, I concluded that the public interest necessitates that this Order be effective immediately. *See* 21 CFR 1316.67.

Reader Aids

Federal Register

Vol. 77, No. 144

Thursday, July 26, 2012

CUSTOMER SERVICE AND INFORMATION

Federal Register/Code of Federal Regulations	
General Information, indexes and other finding aids	**202–741–6000**
Laws	**741–6000**
Presidential Documents	
Executive orders and proclamations	**741–6000**
The United States Government Manual	**741–6000**
Other Services	
Electronic and on-line services (voice)	**741–6020**
Privacy Act Compilation	**741–6064**
Public Laws Update Service (numbers, dates, etc.)	**741–6043**
TTY for the deaf-and-hard-of-hearing	**741–6086**

ELECTRONIC RESEARCH

World Wide Web

Full text of the daily Federal Register, CFR and other publications is located at: **www.fdsys.gov.**

Federal Register information and research tools, including Public Inspection List, indexes, and links to GPO Access are located at: **www.ofr.gov.**

E-mail

FEDREGTOC-L (Federal Register Table of Contents LISTSERV) is an open e-mail service that provides subscribers with a digital form of the Federal Register Table of Contents. The digital form of the Federal Register Table of Contents includes HTML and PDF links to the full text of each document.

To join or leave, go to **http://listserv.access.gpo.gov** and select *Online mailing list archives, FEDREGTOC-L, Join or leave the list (or change settings);* then follow the instructions.

PENS (Public Law Electronic Notification Service) is an e-mail service that notifies subscribers of recently enacted laws.

To subscribe, go to **http://listserv.gsa.gov/archives/publaws-l.html** and select *Join or leave the list (or change settings);* then follow the instructions.

FEDREGTOC-L and **PENS** are mailing lists only. We cannot respond to specific inquiries.

Reference questions. Send questions and comments about the Federal Register system to: **fedreg.info@nara.gov**

The Federal Register staff cannot interpret specific documents or regulations.

Reminders. Effective January 1, 2009, the Reminders, including Rules Going Into Effect and Comments Due Next Week, no longer appear in the Reader Aids section of the Federal Register. This information can be found online at **http://www.regulations.gov.**

CFR Checklist. Effective January 1, 2009, the CFR Checklist no longer appears in the Federal Register. This information can be found online at **http://bookstore.gpo.gov/.**

FEDERAL REGISTER PAGES AND DATE, JULY

39143–39384 2
39385–39616 3
39617–39894 5
39895–40248 6
40249–40458 9
40459–40778 10
40779–41040 11
41041–41242 12
41243–41662 13
41663–41884 16
41885–42174 17
42175–42416 18
42417–42620 19
42621–42948 20
42949–43148 23
43149–43486 24
43487–43708 25
43709–44106 26

CFR PARTS AFFECTED DURING JULY

At the end of each month the Office of the Federal Register publishes separately a List of CFR Sections Affected (LSA), which lists parts and sections affected by documents published since the revision date of each title.

3 CFR

Proclamations:
8840 39885
8841 42943
8842 43703

Executive Orders:
12382 (amended by 13618) 40779
12472 (revoked by 13618) 40779
13618 40779
13619 41243
13620 43483

Administrative Orders:
Memorandums:
Memo. of July 11, 2012 42945
Memorandum of July 19, 2012 43699
Notices:
Notice of July 17, 2012 42415
Notice of July 18, 2012 42619
Notice of July 24, 2012 43707
Presidential Determinations:
No. 2012–10 of June 25, 2012 39615
No. 2012 of July 12, 2012 42947

5 CFR

315 42902
532 41247
550 42903
591 42903
792 42905
831 42909
842 42909
890 42417
2634 39143

Proposed Rules:
890 42914
892 42914
894 42914
Ch. XCVIII 42673

7 CFR

2 40249
305 42621
319 42621
520 40249
759 41248
762 41248
915 39150
930 40250
966 43709
1485 41885
1777 43149
1902 41256
1945 41248
1980 40785
3560 40253

Proposed Rules:
51 41707
457 41709
925 39184
1220 40529
1710 43723
1717 43723
1721 43723
1724 43723
1730 43723

9 CFR

55 42625
81 42625
417 39895

Proposed Rules:
1 41716
2 41716
107 42195

10 CFR

Ch. I 39899
2 39385
30 43544
31 43544
32 43544
40 43544
70 43544
171 39385
1703 41258

Proposed Rules:
2 39442
20 41107
30 ..... 41107, 43666
31 43666
32 43666
40 ..... 41107, 43666
50 41107
61 40817
70 ..... 41107, 43666
72 41107
171 39442
430 40530
431 43015

12 CFR

362 ..... 43151, 43155
404 ..... 41885, 42949
614 39387
1005 40459
1070 39617
1090 42874

Proposed Rules:
1254 41107

13 CFR

115 41663

Proposed Rules:
121 ..... 42197, 42211, 42441

14 CFR

1 ..... 39388, 40478
23 42949
25 40255
33 39623
39 ..... 39153, 39156, 39157, 39159, 39624, 40479, 40481, 40485, 41041, 41045, 41886, 41889, 41891, 41895, 41897, 42419, 42421, 42424, 42874, 42952, 42954, 42956, 42958, 42962, 42964, 42971
67 39389
71 ..... 40488, 40489, 40490, 40492, 41259, 42425, 42427, 42428, 42430, 42874
93 39911
97 ..... 41666, 41668, 42627
117 40790
129 40493

Proposed Rules:

Ch. 1 40310
25 41930
33 42677
39 ..... 39186, 39188, 39444, 39446, 40307, 40820, 40822, 40823, 40826, 40830, 40832, 41931, 41934, 41937, 42225, 42454, 42455, 42457, 42459, 43176, 43178, 43545, 43547, 43550, 43552, 43734, 43736, 43738
71 ..... 39651, 39652, 39653, 40834, 41108, 41939, 42228, 43181, 43183
120 39194
121 39654
382 39800

15 CFR

732 42973
734 39354
738 ..... 39354, 42973
740 ..... 39354, 40493
742 ..... 39354, 40493
743 39354
744 39354
746 ..... 39354, 42973
748 ..... 39354, 40258, 40493
750 40493
752 ..... 39354, 40493
760 40493
770 39354
772 ..... 39354, 41670
774 ..... 39162, 39354, 41670, 42973, 43711
902 42629
922 43942

16 CFR

Proposed Rules:

23 39201

17 CFR

Ch. I 41260
1 39626
39 42560
229 ..... 39380, 42175
240 ..... 39380, 39626, 41602, 41671, 43487
241 42980
249 ..... 41602, 42176, 43487

Proposed Rules:

Ch. I 41110, 41214
15 43968
16 43968
17 43968
18 43968
20 43968
23 41109
39 41940

18 CFR

35 41482
284 43711
376 43488

Proposed Rules:

2 43184
35 ..... 39447, 40414, 43184
37 40414
40 ..... 39858, 43190
101 40414

19 CFR

12 41266

Proposed Rules:

4 43740
10 43740
18 43740
19 43740
113 43740
122 43740
123 43740
141 43740
142 43740
143 43740
144 43740
146 43740
151 43740
181 43740
201 41120
210 41120
351 ..... 40534, 41952

20 CFR

404 43492
416 43492
418 43496

21 CFR

74 39921
177 41899
522 39380
556 39380
870 39924

Proposed Rules:

16 40736
172 42229
175 41953
801 40736
803 40736
806 40736
810 40736
814 40736
820 40736
821 40736
822 40736
830 40736
890 39953

22 CFR

126 39392
232 40790

24 CFR

Proposed Rules:

232 40310
Ch. IX 39452

25 CFR

Proposed Rules:

543 43196
547 43196

26 CFR

1 ..... 41048, 41270
301 43157
602 ..... 41048, 41270

Proposed Rules:

1 ..... 39452, 39655, 42462
301 42462

28 CFR

Proposed Rules:

16 40539

29 CFR

1614 43498
1926 42988
1983 40494
2550 41678
4022 41270

Proposed Rules:

1926 43018
1952 42462
2550 41716

30 CFR

75 43721
914 41680
948 40793
950 40796

Proposed Rules:

938 40836
1206 42230

31 CFR

Proposed Rules:

Ch. X 41334

32 CFR

223 43506
239 39627
706 ..... 39629, 42989
2003 40261

Proposed Rules:

199 39655

33 CFR

84 42637
100 ..... 39393, 39395, 39398, 39630, 39632, 39633, 41902, 43158, 43161, 43511, 43513
110 43514
115 42637
117 ..... 40265, 40266, 40509, 41685, 42432, 42433, 42637, 43164, 43165
147 39164
165 ..... 39169, 39170, 39172, 39174, 39398, 39402, 39404, 39406, 39408, 39411, 39413, 39413, 39418, 39420, 39422, 39633, 39638, 40266, 40509, 40511, 40513, 40515, 40518, 40521, 40798, 40800, 41048, 41271, 41686, 41688, 41902, 41909, 41911, 41914, 42176, 42179, 42638, 42640, 42642, 42644, 42647, 42649, 43167, 43517
334 ..... 42651, 42652, 42653
401 40802

Proposed Rules:

100 ..... 39453, 42464, 42465, 42467
151 43741
155 43741
156 43741
157 43741
165 ..... 39453, 40541, 40544, 41717, 43554, 43557

34 CFR

690 40805

Proposed Rules:

Ch. III 43560
674 42086
682 42086
685 42086

36 CFR

4 39927
294 39576

Proposed Rules:

7 40547
1195 39656

37 CFR

1 42150
41 42150
202 40268

Proposed Rules:

1 ..... 43742, 43759

38 CFR

0 41273
3 ..... 40524, 40525

Proposed Rules:

64 42230

39 CFR

111 40527

Proposed Rules:

111 43561
501 41336
3050 41336

40 CFR

Ch. I 42181
9 ..... 41692, 42990, 43520
50 43521
51 43521
52 ..... 39177, 39180, 39181, 39425, 39938, 39943, 40150, 41051, 41276, 41278, 41279, 41697, 41914, 41916, 42997, 43000
63 41075
81 43521
131 39949
141 ..... 39182, 43523
142 ..... 39182, 43523
171 39640
180 ..... 40271, 40806, 40812, 41081, 41284, 42433, 42654, 43524
261 43002
271 41292
272 41292
300 43529
370 41300
721 ..... 41692, 42990, 43520

Proposed Rules:

9 42679
50 ..... 39205, 39959
51 ..... 39205, 39959, 42834
52 ..... 39205, 39456, 39458, 39657, 39659, 40315, 40317, 40550, 41132, 41337, 41343, 41954, 42470, 42682, 42686, 43018, 43023, 43032, 43196,

43205, 43206
53 39205
58 39205
60 42368
63 ....41146, 42368
81 41132
122 42679
180 ....39962, 41346, 43562
261 41720
271 41348
272 41348
300 ....40318, 43567

41 CFR

128–1 41316

42 CFR

Proposed Rules:
409 41548
413 40952
417 40952
424 41548
431 41548
484 41548
488 41548
489 41548
498 41548

44 CFR

64 ....39642, 41320, 43004
67 41323

45 CFR

156 42658

46 CFR

Proposed Rules:
197 43741

47 CFR

2 ....41919, 43535
10 41331
15 43008
20 ....41919, 43536
54 ....39435, 42185
64 ....42187, 43538
73 ....39439, 40276, 42672
76 40276

Proposed Rules:
2 43567
15 39206
54 43773
64 41955
73 43216
95 43567
301 41956

48 CFR

Ch. 1 ....44046, 44066
1 ....44047, 44065
2 44047
4 44047
16 ....44059, 44062, 44065
22 44065
29 44063
32 44059
52 ....44047, 44059, 44065
53 44064
215 43470
225 43470
252 43470
1002 40302
1032 40302
1052 40302
9904 43542

Proposed Rules:
1 43039
8 43780
12 43780
15 40552
16 43780
25 43039
52 ....43039, 43780
204 43477
212 43474
252 ....43474, 43477
1401 43782
1452 43782
1480 43782

49 CFR

375 41699

Proposed Rules:
171 39662
173 39662
178 39662
552 43216
557 43216
571 ....39206, 40843

50 CFR

17 ....41088, 43170
600 42189
622 ....39647, 42192
635 39648
648 ....40527, 41704
665 43721
679 ....39183, 39440, 39441, 39649, 40305, 40816, 41332, 42193, 42439, 42629
680 42629

Proposed Rules:
17 ....39666, 39670, 39965, 40172, 40222, 40706, 41147, 42238, 43218, 43222, 43796, 43799, 43906
20 ....39983, 42920
32 41002
Ch. II 41728
Ch. III 41728
300 40553
Ch. IV 41728
Ch. V 41728
Ch. VI 41728
600 ....39459, 43803
622 ....39460, 40561, 42251, 42476, 42688

LIST OF PUBLIC LAWS

This is a continuing list of public bills from the current session of Congress which have become Federal laws. It may be used in conjunction with "P L U S" (Public Laws Update Service) on 202–741–6043. This list is also available online at *http://www.archives.gov/federal-register/laws*.

The text of laws is not published in the **Federal Register** but may be ordered in "slip law" (individual pamphlet) form from the Superintendent of Documents, U.S. Government Printing Office, Washington, DC 20402 (phone, 202–512–1808). The text will also be made available on the Internet from GPO's Federal Digital System (FDsys) at *http://www.gpo.gov/fdsys*. Some laws may not yet be available.

H.R. 3902/P.L. 112–145
District of Columbia Special Election Reform Act (July 18, 2012; 126 Stat. 1133)

S. 2061/P.L. 112–146
Former Charleston Naval Base Land Exchange Act of 2012 (July 18, 2012; 126 Stat. 1135)

Last List July 11, 2012

Public Laws Electronic Notification Service (PENS)

PENS is a free electronic mail notification service of newly enacted public laws. To subscribe, go to *http://listserv.gsa.gov/archives/publaws-l.html*

Note: This service is strictly for E-mail notification of new laws. The text of laws is not available through this service. **PENS** cannot respond to specific inquiries sent to this address.