AUTHENTICATED
U.S. GOVERNMENT
INFORMATION
GPO

FEDERAL REGISTER

Vol. 77 Friday,

No. 165 August 24, 2012

Pages 51459–51680

OFFICE OF THE FEDERAL REGISTER

The **FEDERAL REGISTER** (ISSN 0097–6326) is published daily, Monday through Friday, except official holidays, by the Office of the Federal Register, National Archives and Records Administration, Washington, DC 20408, under the Federal Register Act (44 U.S.C. Ch. 15) and the regulations of the Administrative Committee of the Federal Register (1 CFR Ch. I). The Superintendent of Documents, U.S. Government Printing Office, Washington, DC 20402 is the exclusive distributor of the official edition. Periodicals postage is paid at Washington, DC.

The **FEDERAL REGISTER** provides a uniform system for making available to the public regulations and legal notices issued by Federal agencies. These include Presidential proclamations and Executive Orders, Federal agency documents having general applicability and legal effect, documents required to be published by act of Congress, and other Federal agency documents of public interest.

Documents are on file for public inspection in the Office of the Federal Register the day before they are published, unless the issuing agency requests earlier filing. For a list of documents currently on file for public inspection, see *www.ofr.gov.*

The seal of the National Archives and Records Administration authenticates the Federal Register as the official serial publication established under the Federal Register Act. Under 44 U.S.C. 1507, the contents of the **Federal Register** shall be judicially noticed.

The **Federal Register** is published in paper and on 24x microfiche. It is also available online at no charge at *www.fdsys.gov*, a service of the U.S. Government Printing Office.

The online edition of the **Federal Register** is issued under the authority of the Administrative Committee of the Federal Register as the official legal equivalent of the paper and microfiche editions (44 U.S.C. 4101 and 1 CFR 5.10). It is updated by 6:00 a.m. each day the **Federal Register** is published and includes both text and graphics from Volume 59, 1 (January 2, 1994) forward. For more information, contact the GPO Customer Contact Center, U.S. Government Printing Office. Phone 202-512-1800 or 866-512-1800 (toll free). E-mail, *gpo@custhelp.com.*

The annual subscription price for the **Federal Register** paper edition is $749 plus postage, or $808, plus postage, for a combined **Federal Register, Federal Register** Index and List of CFR Sections Affected (LSA) subscription; the microfiche edition of the **Federal Register** including the **Federal Register** Index and LSA is $165, plus postage. Six month subscriptions are available for one-half the annual rate. The prevailing postal rates will be applied to orders according to the delivery method requested. The price of a single copy of the daily **Federal Register,** including postage, is based on the number of pages: $11 for an issue containing less than 200 pages; $22 for an issue containing 200 to 400 pages; and $33 for an issue containing more than 400 pages. Single issues of the microfiche edition may be purchased for $3 per copy, including postage. Remit check or money order, made payable to the Superintendent of Documents, or charge to your GPO Deposit Account, VISA, MasterCard, American Express, or Discover. Mail to: U.S. Government Printing Office—New Orders, P.O. Box 979050, St. Louis, MO 63197-9000; or call toll free 1-866-512-1800, DC area 202-512-1800; or go to the U.S. Government Online Bookstore site, see *bookstore.gpo.gov.*

There are no restrictions on the republication of material appearing in the **Federal Register.**

How To Cite This Publication: Use the volume number and the page number. Example: 77 FR 12345.

Postmaster: Send address changes to the Superintendent of Documents, Federal Register, U.S. Government Printing Office, Washington, DC 20402, along with the entire mailing label from the last issue received.

SUBSCRIPTIONS AND COPIES

PUBLIC

Subscriptions:

Paper or fiche	**202–512–1800**
Assistance with public subscriptions	**202–512–1806**

General online information **202–512–1530; 1–888–293–6498**

Single copies/back copies:

Paper or fiche	**202–512–1800**
Assistance with public single copies	**1–866–512–1800 (Toll-Free)**

FEDERAL AGENCIES

Subscriptions:

Paper or fiche	**202–741–6005**
Assistance with Federal agency subscriptions	**202–741–6005**

FEDERAL REGISTER WORKSHOP

THE FEDERAL REGISTER: WHAT IT IS AND HOW TO USE IT

FOR: Any person who uses the Federal Register and Code of Federal Regulations.

WHO: Sponsored by the Office of the Federal Register.

WHAT: Free public briefings (approximately 3 hours) to present:

1. The regulatory process, with a focus on the Federal Register system and the public's role in the development of regulations.
2. The relationship between the Federal Register and Code of Federal Regulations.
3. The important elements of typical Federal Register documents.
4. An introduction to the finding aids of the FR/CFR system.

WHY: To provide the public with access to information necessary to research Federal agency regulations which directly affect them. There will be no discussion of specific agency regulations.

WHEN: Tuesday, September 11, 2012
9 a.m.–12:30 p.m.

WHERE: Office of the Federal Register
Conference Room, Suite 700
800 North Capitol Street, NW.
Washington, DC 20002

RESERVATIONS: (202) 741–6008

Printed on recycled paper.

Contents

Federal Register

Vol. 77, No. 165

Friday, August 24, 2012

Agriculture Department
See Farm Service Agency
See Food Safety and Inspection Service
See Forest Service
NOTICES
Agency Information Collection Activities; Proposals, Submissions, and Approvals, 51511

Air Force Department
NOTICES
Meetings:
US Air Force Scientific Advisory Board, 51526–51527

Alcohol, Tobacco, Firearms, and Explosives Bureau
NOTICES
Agency Information Collection Activities; Proposals, Submissions, and Approvals:
Firearms Transaction Record, Part 1, Over-the-Counter, 51576–51577
National Response Team Customer Satisfaction Survey, 51577–51578

Architectural and Transportation Barriers Compliance Board

NOTICES
Meetings:
Ad Hoc Rulemaking Committees, etc., 51513–51514

Army Department
See Engineers Corps

Arts and Humanities, National Foundation
See National Foundation on the Arts and the Humanities

Blind or Severely Disabled, Committee for Purchase From People Who Are
See Committee for Purchase From People Who Are Blind or Severely Disabled

Centers for Medicare & Medicaid Services
NOTICES
Medicare and Medicaid Programs:
Application from Hospital for Waiver for Organ Procurement Service Area, 51539–51540
Continued Approval of Det Norske Veritas Healthcare's Hospital Accreditation Program, 51537–51539
Medicare Program:
Advisory Panel on Hospital Outpatient Payment; Requests for Nominations, 51542–51543
Renewal of Deeming Authority of the Accreditation Association for Ambulatory Health Care, Inc., etc., 51540–51542

Coast Guard
RULES
Drawbridge Operations:
Gulf Intracoastal Waterway, St. Petersburg/Tampa, FL, 51470–51471
Safety Zones:
Apache Pier Labor Day Fireworks; Myrtle Beach, South Carolina, 51475–51477
Bostock 50th Anniversary Fireworks, Long Island Sound; Manursing Island, NY, 51473–51475
Swim Around Charleston, Charleston, SC, 51471–51473

Commerce Department
See International Trade Administration
See National Institute of Standards and Technology
See National Oceanic and Atmospheric Administration
NOTICES
Agency Information Collection Activities; Proposals, Submissions, and Approvals, 51514

Committee for Purchase From People Who Are Blind or Severely Disabled
NOTICES
Procurement List; Additions and Deletions, 51521–51523

Community Development Financial Institutions Fund
NOTICES
Meetings:
Community Development Advisory Board, 51616

Council of the Inspectors General on Integrity and Efficiency

NOTICES
Senior Executive Service Performance Review Board Membership, 51523–51526

Defense Department
See Air Force Department
See Engineers Corps
See Navy Department
PROPOSED RULES
Federal Acquisition Regulations:
Basic Safeguarding of Contractor Information Systems, 51496–51499

Energy Department
NOTICES
Agency Information Collection Activities; Proposals, Submissions, and Approvals, 51530

Engineers Corps
NOTICES
Environmental Impact Statements; Availability, etc.:
Proposed Widening of the Pascagoula Lower Sound/Bayou Casotte Channel, Jackson County, MS, 51527

Environmental Protection Agency
RULES
2012 Technical Corrections, Clarifying and Other Amendments to the Greenhouse Gas Reporting Rule, etc., 51477–51495
Source Specific Federal Implementation Plans:
Implementing Best Available Retrofit Technology for Four Corners Power Plant; Navajo Nation, 51620–51648
NOTICES
Amended Environmental Impact Statement Filing System Guidance, 51530–51532
Environmental Impact Statements; Weekly Receipt, 51532

Meetings:
Good Neighbor Environmental Board, 51533–51534
SFIREG POM Working Committee, 51533
Prospective Purchaser Agreements, 51534

Equal Employment Opportunity Commission
RULES
Change of Address for Merit Systems Protection Board, 51469–51470

Farm Service Agency
RULES
End-Use Certificate Program Requirements; suspension, 51459

Federal Aviation Administration
RULES
Airworthiness Directives:
BRP–Powertrain GmbH & Co KG Rotax Reciprocating Engine, 51462–51464
Pratt and Whitney Division Turbofan Engines, 51459–51462
Amendments of Class E Airspace:
Augusta, GA, 51464–51465
NOTICES
Agency Information Collection Activities; Proposals, Submissions, and Approvals:
Commercial Space Transportation Licensing Regulations, 51608

Federal Deposit Insurance Corporation
NOTICES
Agency Information Collection Activities; Proposals, Submissions, and Approvals, 51534–51535

Federal Emergency Management Agency
NOTICES
Major Disaster Declarations:
Colorado; Amendment No. 4, 51546

Federal Trade Commission
NOTICES
Agency Information Collection Activities; Proposals, Submissions, and Approvals, 51535–51536

Fish and Wildlife Service
PROPOSED RULES
Endangered and Threatened Wildlife and Plants:
Impact Analyses of Critical Habitat, 51503–51510
NOTICES
Environmental Assessments; Availability, etc.:
Great Lakes Islands National Wildlife Refuges in Michigan and Wisconsin; Draft Comprehensive Conservation Plan, 51552–51553
Environmental Impact Statements; Availability, etc.:
Habitat Conservation Plan and Application for Incidental Take Permit; Beech Ridge Energy, 51554–51555
Sheldon National Wildlife Refuge, Humboldt County and Washoe County, NV, also Lake County, OR; Final Comprehensive Conservation Plan, 51556–51557

Food Safety and Inspection Service
NOTICES
Meetings:
Codex Alimentarius Commission, Committee on Processed Fruits and Vegetables, 51511–51512

Foreign Assets Control Office
NOTICES
Additional Designations, Foreign Narcotics Kingpin Designation Act, 51616–51617

Forest Service
NOTICES
Meetings:
Allegheny Resource Advisory Committee, 51512–51513
Lawrence County Resource Advisory Committee, 51513

General Services Administration
PROPOSED RULES
Federal Acquisition Regulations:
Basic Safeguarding of Contractor Information Systems, 51496–51499

Geological Survey
NOTICES
Agency Information Collection Activities; Proposals, Submissions, and Approvals:
National Cooperative Geologic Mapping Program, 51557–51558

Health and Human Services Department
See Centers for Medicare & Medicaid Services
See Health Resources and Services Administration
See National Institutes of Health
See Substance Abuse and Mental Health Services Administration
NOTICES
Meetings:
National Biodefense Science Board, 51537
National Vaccine Advisory Committee, 51536–51537

Health Resources and Services Administration
NOTICES
Meetings:
National Advisory Committee on Rural Health and Human Services, 51543–51544

Homeland Security Department
See Coast Guard
See Federal Emergency Management Agency
NOTICES
Exercise of Authority under the Immigration and Nationality Act, 51545

Housing and Urban Development Department
RULES
Strengthening Risk Management through Responsible FHA–Approved Lenders, 51465–51469
NOTICES
Federal Properties Suitable as Facilities to Assist Homeless, 51546–51551

Indian Affairs Bureau
NOTICES
Environmental Impact Statements; Availability, etc.:
Proposed Pokagon Band Tribal Village Fee-to-Trust Acquisition and Casino Project, City of South Bend, St. Joseph County, IN, 51558–51559

Interior Department
See Fish and Wildlife Service
See Geological Survey
See Indian Affairs Bureau
See Land Management Bureau

See National Park Service
See Ocean Energy Management Bureau
NOTICES
Agency Information Collection Activities; Proposals, Submissions, and Approvals:
Alternatives Process in Hydropower Licensing, 51551–51552

Internal Revenue Service
PROPOSED RULES
Prohibited Payment Option under Single-Employer Defined Benefit Plan of Plan Sponsor in Bankruptcy:
Hearing Cancellation, 51496

International Trade Administration
NOTICES
Antidumping Duty Investigations; Results, Extensions, Amendments, etc.:
Steel Wire Garment Hangers from Socialist Republic of Vietnam, Preliminary Affirmative Determination of Critical Circumstances, 51514–51518

International Trade Commission
NOTICES
Antidumping and Countervailing Duty Investigations; Results, Extensions, Amendments, etc.:
Large Residential Washers from Korea and Mexico; Scheduling of Final Phase, 51569–51570
Antidumping and Countervailing Duty Orders; Investigations; Results, Extensions, Amendments, etc.:
Certain Lined Paper School Supplies from China, India, and Indonesia, 51570–51571
Complaints:
Certain Wireless Communication Devices, Portable Music and Data Processing Devices, Computers, etc., 51571
Investigations:
Certain Wireless Consumer Electronics Devices and Components Thereof, 51572–51573
Investigations; Determinations, Results, etc.:
Certain Automated Media Library Devices, 51573–51574
Investigations; Terminations, Modifications and Rulings, etc.:
Certain Devices with Secure Communication Capabilities, etc., 51575

Justice Department
See Alcohol, Tobacco, Firearms, and Explosives Bureau
See Justice Programs Office
NOTICES
Lodgings of Consent Decrees:
Comprehensive Environmental Response, Compensation and Liability Act, 51575–51576
Lodgings of Proposed Consent Decrees:
Clean Air Act; Fourth Amendment, 51576

Justice Programs Office
NOTICES
Agency Information Collection Activities; Proposals, Submissions, and Approvals:
National Corrections Reporting Program, 51578–51579

Labor Department
NOTICES
Meetings:
Advisory Committee on Veterans Employment, Training and Employer Outreach, 51579

Land Management Bureau
NOTICES
Environmental Assessments; Availability, etc.:
Proposed Cameron to Milford-138 kV Transmission Line Project, etc., Cedar City Field Office, Cedar City, UT, 51559–51560
Filings of Plats of Surveys:
North Dakota, 51560
Realty Actions:
Termination of Recreation and Public Purposes Act Classifications and Opening of Lands; Wyoming, 51560–51561
Temporary Restriction Order for Skinny Dipper Hot Springs, Boise County, Idaho, 51561–51562

National Aeronautics and Space Administration
PROPOSED RULES
Federal Acquisition Regulations:
Basic Safeguarding of Contractor Information Systems, 51496–51499

National Foundation on the Arts and the Humanities
NOTICES
Meetings:
Humanities Panel; Correction, 51579

National Highway Traffic Safety Administration
RULES
Federal Motor Vehicle Safety Standards:
Motorcycle Brake Systems, 51650–51680
PROPOSED RULES
Greenhouse Gas Emissions Standards and Fuel Efficiency Standards:
Medium- and Heavy-Duty Engines and Vehicles, 51499–51503
NOTICES
Agency Information Collection Activities; Proposals, Submissions, and Approvals, 51609–51610
Funding Availabilities:
Distracted Driving Grant Program, 51610–51612
Petitions for Exemptions from Vehicle Theft Prevention Standard:
Mitsubishi Motors R and D of America, Inc., 51612–51614

National Institute of Standards and Technology
NOTICES
Alternative Personnel Management System, 51518–51519

National Institutes of Health
NOTICES
Meetings:
Center for Scientific Review, 51544–51545
National Institute of Arthritis and Musculoskeletal and Skin Diseases, 51544
National Institute of Biomedical Imaging and Bioengineering, 51544

National Oceanic and Atmospheric Administration
PROPOSED RULES
Endangered and Threatened Wildlife and Plants:
Impact Analyses of Critical Habitat, 51503–51510
NOTICES
Applications
Marine Mammals; File No. 17403, 51519–51520
Endangered and Threatened Species:
Take of Anadromous Fish, 51520
Meetings:
New England Fishery Management Council, 51521

North Pacific Fishery Management Council, 51521

National Park Service
NOTICES
Intents to Repatriate Cultural Items:
U.S. Department of Agriculture, Forest Service, Coconino National Forest, Flagstaff, AZ, 51562
Inventory Completions:
Herrett Center for Arts and Science, College of Southern Idaho, Twin Falls, ID, 51564–51565
Southern Oregon Historical Society, Medford, OR, 51565–51566
Thomas Burke Memorial Washington State Museum, University of Washington, Seattle, WA, 51564
University of Washington, Department of Anthropology, Seattle, WA, 51563
National Register of Historic Places:
Pending Nominations and Related Actions, 51566–51568

Navy Department
NOTICES
Environmental Impact Statements; Availability, etc.:
Proposed Modernization and Expansion of Townsend Bombing Range, GA, 51527–51528
Public Hearings:
Draft Environmental Impact Statement for Outdoor Research, Development, Test and Evaluation Activities, Naval Surface Warfare Center, Dahlgren Division, Dahlgren, VA, 51528–51530

Nuclear Regulatory Commission
NOTICES
Applications:
License to Export High-Enriched Uranium, 51579–51580
Meetings:
Advisory Committee on Reactor Safeguards, 51580–51581
Requests for Export Licenses:
Nuclear Grade Graphite, 51581–51582

Ocean Energy Management Bureau
NOTICES
Outer Continental Shelf, Gulf of Mexico, Oil and Gas Lease Sales:
Western Planning Area Lease Sale 233 and Central Planning Area Lease Sale 231, 51568–51569

Pension Benefit Guaranty Corporation
NOTICES
Agency Information Collection Activities; Proposals, Submissions, and Approvals:
Qualified Domestic Relations Orders Submitted to PBGC, 51582–51583

Postal Regulatory Commission
NOTICES
New Postal Products, 51583

Postal Service
NOTICES
Product Changes:
First-Class Package Service Negotiated Service Agreement, 51583–51584

Securities and Exchange Commission
NOTICES
Agency Information Collection Activities; Proposals, Submissions, and Approvals, 51584–51589
Applications and Temporary Orders:
ReconTrust Co., N.A., et al., 51589–51590
Self-Regulatory Organizations; Proposed Rule Changes:
BATS Exchange, Inc., 51602–51604
EDGA Exchange, Inc., 51594–51595
EDGX Exchange, Inc., 51593–51594
ICE Clear Credit LLC, 51600–51602
New York Stock Exchange LLC, 51596–51599
NYSE MKT LLC, 51590–51593

State Department
NOTICES
Certifications Related to Khmer Rouge Tribunal, 51604–51606
Culturally Significant Objects Imported for Exhibition:
Extravagant Inventions; The Princely Furniture of the Roentgens, etc., 51606
Requests for Environmental Experts:
To Assist CAFTA–DR Secretariat for Environmental Matters with Preparation of Factual Records, 51606–51607

State Justice Institute
NOTICES
Meetings:
Board of Directors, 51607–51608

Substance Abuse and Mental Health Services Administration

NOTICES
Meetings:
Center for Mental Health Services; Amendment, 51545

Surface Transportation Board
NOTICES
Abandonment Exemptions:
CSX Transportation, Inc., Niagara County, NY, 51614
Union Pacific Railroad Co., Polk County, Iowa, 51614–51615
Acquisitions of Control Exemptions:
DMH Trust fbo Martha M. Head; Twin Cities and Western Railroad Co., Minnesota Prairie Line, Inc. and Sisseton Milbank Railroad Co., 51615–51616

Transportation Department
See Federal Aviation Administration
See National Highway Traffic Safety Administration
See Surface Transportation Board
NOTICES
Funding Availabilities:
Small Business Transportation Resource Center Program; Extension, 51608

Treasury Department
See Community Development Financial Institutions Fund
See Foreign Assets Control Office
See Internal Revenue Service

Separate Parts In This Issue

Part II
Environmental Protection Agency, 51620–51648

Part III
Transportation Department, National Highway Traffic Safety Administration, 51650–51680

Reader Aids

Consult the Reader Aids section at the end of this page for phone numbers, online resources, finding aids, reminders, and notice of recently enacted public laws.

To subscribe to the Federal Register Table of Contents LISTSERV electronic mailing list, go to http://listserv.access.gpo.gov and select Online mailing list archives, FEDREGTOC-L, Join or leave the list (or change settings); then follow the instructions.

CFR PARTS AFFECTED IN THIS ISSUE

A cumulative list of the parts affected this month can be found in the Reader Aids section at the end of this issue.

7 CFR
782 51459

14 CFR
39 (2 documents) 51459, 51462
71 51464

24 CFR
25 51465
30 51465
201 51465
202 51465
203 51465
206 51465

26 CFR
Proposed Rules:
1 51496

29 CFR
1614 51469

33 CFR
117 51470
165 (3 documents) 51471, 51473, 51475

40 CFR
49 51620
98 51477

48 CFR
Proposed Rules:
4 51496
7 51496
12 51496
42 51496
52 51496

49 CFR
571 51650
Proposed Rules:
535 51499

50 CFR
Proposed Rules:
424 51503

Rules and Regulations

Federal Register
Vol. 77, No. 165
Friday, August 24, 2012

This section of the FEDERAL REGISTER contains regulatory documents having general applicability and legal effect, most of which are keyed to and codified in the Code of Federal Regulations, which is published under 50 titles pursuant to 44 U.S.C. 1510.

The Code of Federal Regulations is sold by the Superintendent of Documents. Prices of new books are listed in the first FEDERAL REGISTER issue of each week.

DEPARTMENT OF AGRICULTURE

Farm Service Agency

7 CFR Part 782

Suspension of End-Use Certificate Program Requirements

AGENCY: Farm Service Agency, USDA.

ACTION: Final rule.

SUMMARY: This final rule suspends indefinitely the Farm Service Agency (FSA) regulation requiring end-use certificates and tracking of wheat produced in Canada that enters the United States. This action is being taken in response to the discontinuation of Canada's end-use certificate program. As a result of these changes, importers and end-users of Canadian produced wheat are no longer required to provide FSA end-use certificates or consumption and resale reports on wheat produced in Canada.

DATES: Effective August 31, 2012.

FOR FURTHER INFORMATION CONTACT: Helen Linden, Farm Service Agency, Commodity Operations Division, telephone (202) 690–4321, or email *Helen.linden@wdc.usda.gov*.

SUPPLEMENTARY INFORMATION: Section 321(f) of the North American Free Trade Agreement (NAFTA) Implementation Act requires the Secretary of Agriculture to:

(1) Establish end-use certificates for imports of wheat and barley from a foreign country that requires end-use certificates for imports of U.S. produced wheat or barley; and

(2) Suspend end-use certificate requirements if the foreign countries that have similar requirements terminate such requirements. Canada was the only country requiring end-use certificates, and wheat was the only commodity subject to end-use certificate requirements.

FSA regulations regarding the U.S. end-use certificate program were implemented in 7 CFR part 782, End Use Certificate Program. These regulations provide, in part, that the provisions of the regulations will be suspended 30 calendar days following the date Canada eliminates its end-use certificate requirement.

Canada announced that effective August 1, 2012, it will no longer require end-use certificates on U.S. produced wheat entering Canada. Therefore, by the statutory and regulatory authorities mentioned above, effective August 31, 2012, FSA is suspending the End-Use Certificate filing requirements in 7 CFR part 782. Accordingly, beginning August 31, 2012, importers and end-users of Canadian wheat will no longer be required to file either the End-Use Certificate for Wheat (FSA–750) or the End-Use Certificate Program Canadian Wheat Consumption and Resale Report (FSA–751).

List of Subjects in 7 CFR Part 782

Administrative practice and procedure, Barley, Reporting and recordkeeping requirements, Wheat.

PART 782—[SUSPENDED]

■ Accordingly, under the authority of 7 U.S.C. 6932, 15 U.S.C. 714b and 714c and 19 U.S.C. 3391, the Farm Security administration suspends indefinitely 7 CFR part 782.

Signed on August 3, 2012.

Juan M. Garcia,

Administrator, Farm Service Agency.

[FR Doc. 2012–20983 Filed 8–23–12; 8:45 am]

BILLING CODE 3410–05–P

DEPARTMENT OF TRANSPORTATION

Federal Aviation Administration

14 CFR Part 39

[Docket No. FAA–2012–0079; Directorate Identifier 2012–NE–06–AD; Amendment 39–17148; AD 2012–16–01]

RIN 2120–AA64

Airworthiness Directives; Pratt & Whitney Division Turbofan Engines

AGENCY: Federal Aviation Administration (FAA), DOT.

ACTION: Final rule.

SUMMARY: We are adopting a new airworthiness directive (AD) for Pratt & Whitney Division PW4052, PW4152, PW4056, PW4156A, PW4060, PW4060A, PW4060C, PW4062, PW4062A, PW4158, PW4460, PW4462, PW4164, PW4164C, PW4164C/B, PW4168, and PW4168A turbofan engines with certain high-pressure turbine (HPT) stage 1 front hubs installed. This AD was prompted by Pratt & Whitney's updated low-cycle-fatigue analysis that indicated certain HPT stage 1 front hubs could initiate a crack prior to the published life limit. This AD requires removing the affected HPT stage 1 front hubs from service using a drawdown plan. We are issuing this AD to prevent failure of the HPT stage 1 front hub, which could lead to an uncontained engine failure and damage to the airplane.

DATES: This AD is effective September 28, 2012.

The Director of the Federal Register approved the incorporation by reference of certain publications listed in the AD as of September 28, 2012.

ADDRESSES: For service information identified in this AD, contact Pratt & Whitney, 400 Main St., East Hartford, CT 06108; phone: 860–565–7700; fax: 860–565–1605. You may view this service information at the FAA, Engine & Propeller Directorate, 12 New England Executive Park, Burlington, MA. For information on the availability of this material at the FAA, call 781–238–7125.

Examining the AD Docket

You may examine the AD docket on the Internet at *http://www.regulations.gov;* or in person at the Docket Management Facility between 9 a.m. and 5 p.m., Monday through Friday, except Federal holidays. The AD docket contains this AD, the regulatory evaluation, any comments received, and other information. The address for the Docket Office (phone: 800–647–5527) is Document Management Facility, U.S. Department of Transportation, Docket Operations, M–30, West Building Ground Floor, Room W12–140, 1200 New Jersey Avenue SE., Washington, DC 20590.

FOR FURTHER INFORMATION CONTACT: James Gray, Aerospace Engineer, Engine Certification Office, FAA, 12 New England Executive Park, Burlington, MA; phone: 781–238–7742; fax: 781–238–7199; email: *james.e.gray@faa.gov*.

SUPPLEMENTARY INFORMATION:

Discussion

We issued a notice of proposed rulemaking (NPRM) to amend 14 CFR part 39 to include an AD that would apply to the specified products. That NPRM published in the **Federal Register** on March 23, 2012 (77 FR 16967). That NPRM proposed to require removing the affected HPT stage 1 front hubs from service using a drawdown plan.

Comments

We gave the public the opportunity to participate in developing this AD. The following presents the comments received on the proposal and the FAA's response to each comment.

Support for the NPRM

One commenter, The Boeing Company, supported the contents of the proposed AD (77 FR 16967, March 23, 2012), as written.

Request To Modify Applicability

Commenters United Airlines, United Parcel Service Co. (UPS), Pratt & Whitney (P&W), and MNG Airlines requested that part numbers (P/Ns) 52L301 and 51L201–021 be added to the applicability paragraphs (c)(1) and (c)(2) of the proposed AD (77 FR 16967, March 23, 2012). The commenters noted that the applicability of the proposed AD is inconsistent since it includes some assembly P/Ns and some detail P/Ns.

We agree. We revised the applicability paragraphs of this AD to include the referenced P/Ns for consistency.

Request To Change Compliance Time

Commenters UPS, MNG Airlines, and Onur Air requested that the compliance time be changed to ''at next piece-part exposure after the effective date of this AD or before accumulating the number of cycles listed in this AD, whichever occurs later.'' MNG Airlines indicated that its engines would lose 1,382 flight cycles, which would cost more than $1,000,000 and force early shop visits. Onur Air noted that its engines would lose 1,300 cycles and it would cause stub life problems on other life limited parts. UPS also expressed its concern over the increased shop burden from a hub life reduction.

We do not agree. We determined that removal of the HPT stage 1 front hubs according to the compliance times in paragraph (f) of this AD provides an acceptable level of safety for the fleet. This acceptable level of safety would not be maintained if all HPT stage 1 front hubs were allowed to remain in service until the next piece-part exposure above the number of cycles listed in this AD. For this reason, we also cannot adjust the compliance time to account for potential stub life problems that might occur in the other rotors. We did not change the AD.

Request To Reference the PW4000 Engine Manual Chapter 05 Life Limits

Commenters MNG Airlines and P&W requested that the phrase ''former life limits cannot be exceeded'' be added to compliance paragraphs (f)(1)(ii) and (f)(2)(ii) of the proposed AD (77 FR 16967, March 23, 2012), or that some other reference to the PW4000 Engine Manual Chapter 05 life limits be added when the stage 1 front hub is operating during the 1,000 cycle drawdown. United commented that a reference to the reduced life limits be included in Chapter 05 of the Airworthiness Limitations Section (ALS) of the PW4000 Engine Manual.

We do not agree. The Chapter 05 life limits cannot be exceeded. For those hubs beneath the Chapter 05 life limit, this AD requires removal according to the drawdown schedule in the AD, which is before the Chapter 05 limit is reached. This AD's requirements are independent from the Chapter 05 life limits in the ALS of the PW4000 Engine Manual. We did not change the AD.

Request Revisions to Service Information To Be Incorporated by Reference

P&W, UPS, and United requested revisions to the service information that is incorporated by reference in the AD. P&W requested that the AD reference the new P&W Alert Service Bulletin (ASB) No. PW4ENG A72–821, dated July 6, 2012 and P&W ASB No. PW4G–100–A72–246, dated June 28, 2012, which address the unsafe condition and contain the affected part numbers by serial number for the PW4000–94'' and PW4000–100'' engines. UPS also asked that the AD be revised to note that any subsequent revision of the service bulletin (SB) can be used for compliance.

We agree in part. Our proposed AD (77 FR 16967, March 23, 2012), referenced the P/N-serial number (S/N) tables of affected parts in the old SBs. We agree that we should use the new P&W SBs. We changed paragraph (c) of this AD to incorporate the P/N–S/N tables from the new P&W ASBs, specifically from P&W ASB No. PW4ENG A72–821, dated July 6, 2012 and P&W ASB No. PW4G–100–A72–246, dated June 28, 2012.

We disagree that the AD should be revised to incorporate future revisions of an ASB because we do not know the contents of SBs not yet published. We did not change the AD based on UPS's comment.

Request To Modify Compliance Wording

P&W requested that the phrase ''or at the next piece-part exposure after the effective date of this AD, whichever occurs first'' be removed from the compliance paragraphs (f)(1)(ii) and (f)(2)(ii). P&W indicated that, based on the proposed AD, operators may not be able to run HPT stage 1 front hubs, identified in paragraphs (c)(1)(i) and (c)(1)(ii), that are exposed at piece-part between 17,000 and 18,000 cycles-since-new (CSN) and HPT stage 1 front hubs, identified in paragraphs (c)(2) and (c)(3), that are exposed between 12,700 and 13,700 CSN, to the full 1,000 cycle drawdown.

We partially agree. We agree that the AD if adopted as proposed could have forced removal of HPT stage 1 front hubs prior to reaching 18,000 CSN and 13,700 CSN, respectively. We disagree that we should remove the at piece-part exposure wording from paragraphs (f)(1)(ii) and (f)(2)(ii) of the AD, because HPT stage 1 front hubs that are exposed at piece-part after 18,000 CSN and 13,700 CSN should not go back into service, even if they have not accumulated an additional 1,000 cycles in service. We therefore, revised paragraphs (f)(1)(ii) and (f)(2)(ii) of the proposed AD (77 FR 16967, March 23, 2012), to clarify that these HPT stage 1 front hubs should be removed at the next piece-part exposure above 18,000 CSN and 13,700 CSN, respectively, rather than at the next piece-part exposure after the effective date of the AD. This change is consistent with the installation prohibition for HPT stage 1 front hubs in paragraph (g) of this AD.

Request for Allowance for Mixed-Model Management

United asked that the AD include an allowance for mixed-model management.

We do not agree. The AD does not restrict use of mixed-model management. If an operator uses mixed-model management, then 18,000 CSN and 13,700 CSN should be used in the calculation for the respective engine models included in paragraph (c) of this AD. We did not change the AD.

Request To Add Credit for Prior Compliance

FedEx Express (FedEx) asked that the AD include credit for compliance to prior SBs.

We do not agree. Operators can take credit for previous actions based on paragraph (e) of this AD. We did not change the AD.

Request To Clarify Requirements for P/N 51L901

FedEx asked that the AD requirements for stage 1 front hub, P/N 51L901, be clarified. FedEx claimed that the relevant service information section of the AD and its applicability are contradictory.

We do not agree. We reviewed the P/N references and find no contradictions between the two sections. We did not change the AD.

Revision to Cost of Compliance

In reviewing our cost of compliance estimate made in the NPRM (77 FR 16967, March 23, 2012), we found that our estimate was wrong. Specifically, we found that we based our estimate on the number of engines installed on airplanes worldwide rather than just on the U.S. fleet. Therefore, we changed our estimate to reflect U.S. operators only. This change reduced the number of engines affected from 954 to 289 and the total cost estimate from $23,049,537 to $6,981,578.

Conclusion

We reviewed the relevant data, considered the comments received, and determined that air safety and the public interest require adopting the AD with the changes described previously. We also determined that these changes will not increase the economic burden on any operator nor increase the scope of the AD.

Costs of Compliance

We estimate that this AD would affect 289 engines installed on airplanes of U.S. registry. About 183 engines use a 20,000 CSN life limit for the HPT stage 1 front hub. For these engines, we estimate the lost part life to have a value of about $25,400 per engine. About 106 engines use a 15,000 CSN life limit. For these engines, we estimate the lost life to have a value of about $22,013 per engine. Based on these figures, we estimate the total cost of the AD to U.S. operators is $6,981,578.

Authority for This Rulemaking

Title 49 of the United States Code specifies the FAA's authority to issue rules on aviation safety. Subtitle I, section 106, describes the authority of the FAA Administrator. Subtitle VII: Aviation Programs, describes in more detail the scope of the Agency's authority.

We are issuing this rulemaking under the authority described in Subtitle VII, Part A, Subpart III, Section 44701: ''General requirements.'' Under that section, Congress charges the FAA with promoting safe flight of civil aircraft in air commerce by prescribing regulations for practices, methods, and procedures the Administrator finds necessary for safety in air commerce. This regulation is within the scope of that authority because it addresses an unsafe condition that is likely to exist or develop on products identified in this rulemaking action.

Regulatory Findings

This AD will not have federalism implications under Executive Order 13132. This AD will not have a substantial direct effect on the States, on the relationship between the national government and the States, or on the distribution of power and responsibilities among the various levels of government.

For the reasons discussed above, I certify that this AD:

(1) Is not a ''significant regulatory action'' under Executive Order 12866,

(2) Is not a ''significant rule'' under DOT Regulatory Policies and Procedures (44 FR 11034, February 26, 1979),

(3) Will not affect intrastate aviation in Alaska, and

(4) Will not have a significant economic impact, positive or negative, on a substantial number of small entities under the criteria of the Regulatory Flexibility Act.

List of Subjects in 14 CFR Part 39

Air transportation, Aircraft, Aviation safety, Incorporation by reference, Safety.

Adoption of the Amendment

Accordingly, under the authority delegated to me by the Administrator, the FAA amends 14 CFR part 39 as follows:

PART 39—AIRWORTHINESS DIRECTIVES

■ 1. The authority citation for part 39 continues to read as follows:

Authority: 49 U.S.C. 106(g), 40113, 44701.

§ 39.13 [Amended]

■ 2. The FAA amends § 39.13 by adding the following new airworthiness directive (AD):

2012–16–01 Pratt & Whitney Division: Amendment 39–17148; Docket No. FAA–2012–0079; Directorate Identifier 2012–NE–06–AD.

(a) Effective Date

This AD is effective September 28, 2012.

(b) Affected ADs

None.

(c) Applicability

This AD applies to the following Pratt & Whitney Division turbofan engines:

(1) PW4052, PW4152, and PW4056 turbofan engines, including models with any dash number suffix, with a high-pressure turbine (HPT) stage 1 front hub part number (P/N) listed in Table 1 to paragraph (c) of this AD installed.

(2) PW4156A, PW4060, PW4060A, PW4060C, PW4062, PW4062A, PW4158, PW4460, and PW4462 turbofan engines, including models with any dash number suffix, with an HPT stage 1 front hub P/N listed in Table 1 to paragraph (c) of this AD installed.

TABLE 1 TO PARAGRAPH (C)

P/N 51L601	All serial numbers (S/Ns).
P/N 52L401	With a S/N not listed in Table 5 of the Accomplishment Instructions of Pratt & Whitney Alert Service Bulletin (ASB) No. PW4ENG A72–821, dated July 6, 2012.
P/N 51L201, P/N 51L201–001, P/N 51L201–021	All S/Ns.
P/N 51L901, P/N 52L301	With an S/N not listed in Table 7 of the Accomplishment Instructions of Pratt & Whitney ASB No. PW4ENG A72–821, dated July 6, 2012.

(3) PW4164, PW4164C, PW4164C/B, PW4168, and PW4168A turbofan engines with an HPT stage 1 front hub, P/N 51L901, installed with an S/N not listed in Table 3 of the Accomplishment Instructions of Pratt & Whitney ASB No. PW4G–100–A72–246, dated June 28, 2012.

(d) Unsafe Condition

This AD was prompted by Pratt & Whitney's updated low-cycle-fatigue analysis that indicated certain HPT stage 1 front hubs could initiate a crack prior to the published

life limit. This AD requires removing the affected HPT stage 1 front hubs from service using a drawdown plan. We are issuing this AD to prevent failure of the HPT stage 1 front hub, which could lead to an uncontained engine failure and damage to the airplane.

(e) Compliance

Comply with this AD within the compliance times specified, unless already done.

(f) Removal of HPT Stage 1 Front Hubs From Service

(1) For HPT stage 1 front hubs listed in paragraph (c)(1) of this AD, do the following:

(i) If the HPT stage 1 front hub has accumulated 17,000 or fewer cycles-since-new (CSN) on the effective date of this AD, remove the HPT stage 1 front hub from service before accumulating 18,000 CSN.

(ii) If the HPT stage 1 front hub has accumulated more than 17,000 CSN on the effective date of this AD, remove the HPT stage 1 front hub from service before accumulating an additional 1,000 cycles-in-service (CIS) or at the next piece-part exposure above 18,000 CSN, whichever occurs first.

(2) For HPT stage 1 front hubs listed in paragraphs (c)(2) and (c)(3) of this AD, do the following:

(i) If the HPT stage 1 front hub has accumulated 12,700 or fewer CSN on the effective date of this AD, remove the HPT stage 1 front hub from service before accumulating 13,700 CSN.

(ii) If the HPT stage 1 front hub has accumulated more than 12,700 CSN on the effective date of this AD, remove the HPT stage 1 front hub from service before accumulating an additional 1,000 CIS or at the next piece-part exposure above 13,700 CSN, whichever occurs first.

(g) Installation Prohibition

After the effective date of this AD, do not install into any engine any HPT stage 1 front hubs listed in paragraph (c)(1) of this AD that are at piece-part exposure and exceed 18,000 CSN, or any HPT stage 1 front hubs listed in paragraphs (c)(2) and (c)(3) of this AD that are at piece-part exposure and exceed 13,700 CSN.

(h) Definition

For the purpose of this AD, piece-part exposure means that the part is completely disassembled and removed from the engine.

(i) Alternative Methods of Compliance (AMOCs)

The Manager, Engine Certification Office, may approve AMOCs for this AD. Use the procedures found in 14 CFR 39.19 to make your request.

(j) Related Information

For more information about this AD, contact James Gray, Aerospace Engineer, Engine Certification Office, FAA, 12 New England Executive Park, Burlington, MA; phone: 781–238–7742; fax: 781–238–7199; email: *james.e.gray@faa.gov.*

(k) Material Incorporated by Reference

(1) The Director of the Federal Register approved the incorporation by reference (IBR) of the following service information under 5 U.S.C. 552(a) and 1 CFR part 51.

(2) You must use the following service information to do the actions required by this AD, unless the AD specifies otherwise:

(i) Pratt & Whitney Alert Service Bulletin (ASB) No. PW4ENG A72–821, dated July 6, 2012.

(ii) Pratt & Whitney ASB No. PW4G–100–A72–246, dated June 28, 2012.

(3) For service information identified in this AD, contact Pratt & Whitney, 400 Main St., East Hartford, CT 06108; phone: 860–565–7700; fax: 860–565–1605.

(4) You may review this service information at the FAA, Engine & Propeller Directorate, 12 New England Executive Park, Burlington, MA. For information on the availability of this material at the FAA, call 781–238–7125.

(5) You may also review the service information that is incorporated by reference at the National Archives and Records Administration (NARA). For information on the availability of this material at NARA, call 202–741–6030, or go to: *http://www.archives.gov/federal-register/cfr/ibr-locations.html.*

Issued in Burlington, Massachusetts, on July 26, 2012.

Peter A. White,

Manager, Engine & Propeller Directorate, Aircraft Certification Service.

[FR Doc. 2012–20842 Filed 8–23–12; 8:45 am]

BILLING CODE 4910–13–P

DEPARTMENT OF TRANSPORTATION

Federal Aviation Administration

14 CFR Part 39

[Docket No. FAA–2012–0603; Directorate Identifier 2012–NE–17–AD; Amendment 39–17160; AD 2012–16–13]

RIN 2120–AA64

Airworthiness Directives; BRP-Powertrain GmbH & Co KG Rotax Reciprocating Engines

AGENCY: Federal Aviation Administration (FAA), DOT.

ACTION: Final rule; request for comments.

SUMMARY: We are adopting a new airworthiness directive (AD) for BRP-Powertrain GmbH & Co KG Rotax 912 F2; 912 F3; 912 F4; 912 S2; 912 S3; and 912 S4 reciprocating engines. This AD requires replacing the pressure side fuel hose on certain fuel pumps and inspecting the carburetors connected to those fuel pumps for contamination within 5 flight hours after the effective date of this AD. This AD was prompted by reports of fuel pumps having pressure side fuel hoses not meeting the design specification. We are issuing this AD to prevent pressure side fuel hose deterioration and contamination of the carburetor, which could result in an in-flight engine shutdown, forced landing and damage to the airplane.

DATES: This AD becomes effective September 10, 2012.

We must receive comments on this AD by October 9, 2012.

The Director of the Federal Register approved the incorporation by reference of BRP-Powertrain GmbH & Co KG, Rotax Aircraft Engines Alert Service Bulletin No. ASB–912–061R1, dated May 31, 2012, listed in the AD as of September 10, 2012.

ADDRESSES: You may send comments by any of the following methods:

- *Federal eRulemaking Portal:* Go to *http://www.regulations.gov* and follow the instructions for sending your comments electronically.
- *Mail:* U.S. Department of Transportation, 1200 New Jersey Avenue SE., West Building Ground Floor, Room W12–140, Washington, DC 20590–0001.
- *Hand Delivery:* Deliver to Mail address above between 9 a.m. and 5 p.m., Monday through Friday, except Federal holidays.
- *Fax:* 202–493–2251.

For service information identified in this AD, contact BRP-Powertrain GmbH & Co KG, Welser Strasse 32, A–4623 Gunskirchen, Austria, or go to: *http://www.rotax-aircraft-engines.com.* You may view this service information at the FAA, Engine & Propeller Directorate, 12 New England Executive Park, Burlington, MA 01803. For information on the availability of this material at the FAA, call 781–238–7125.

Examining the AD Docket

You may examine the AD docket on the Internet at *http://www.regulations.gov;* or in person at the Docket Operations office between 9 a.m. and 5 p.m., Monday through Friday, except Federal holidays. The AD docket contains this AD, the regulatory evaluation, any comments received, and other information. The street address for the Docket Operations office (phone: 800–647–5527) is the same as the Mail address provided in the **ADDRESSES** section. Comments will be available in the AD docket shortly after receipt.

FOR FURTHER INFORMATION CONTACT: Alan Strom, Aerospace Engineer, Engine Certification Office, FAA, Engine & Propeller Directorate, 12 New England Executive Park, Burlington, MA 01803; email: *alan.strom@faa.gov;* phone: 781–238–7143; fax: 781–238–7199.

SUPPLEMENTARY INFORMATION:

Discussion

The European Aviation Safety Agency (EASA), which is the Technical Agent for the Member States of the European Community, has issued EASA AD 2012–0097–E, dated May 31, 2012, and AD 2012–0097R1, dated June 1, 2012 (referred to after this as ''the MCAI''), to correct an unsafe condition for the specified products. The MCAI states:

> Reports from the field confirmed a non-compliance of the pressure side fuel hoses installed on certain P/N 893114 fuel pumps, which may have resulted in a latent defect on a limited number of engines. The affected hoses may not be fuel resistant in accordance with the specification. This condition, if not corrected, could lead to detachment of particles from the fuel hose and irregularities in the carburetor function, possibly resulting in in-flight engine shutdown, and forced landing, damage to the aeroplane and injury to occupants.

You may obtain further information by examining the MCAI in the AD docket.

Relevant Service Information

BRP-Powertrain GmbH & Co KG has issued Alert Service Bulletin No. ASB–912–061R1, dated May 31, 2012. The actions described in this service information are intended to correct the unsafe condition identified in the MCAI.

FAA's Determination and Requirements of This AD

This product has been approved by the aviation authority of Austria, and is approved for operation in the United States. Pursuant to our bilateral agreement with the European Community, EASA has notified us of the unsafe condition described in the MCAI and service information referenced above. We are issuing this AD because we evaluated all information provided by EASA and determined the unsafe condition exists and is likely to exist or develop on other products of the same type design. This AD requires replacing the pressure side fuel hose on certain fuel pumps and inspecting the carburetors connected to those fuel pumps for contamination within 5 flight hours after the effective date of the AD.

FAA's Determination of the Effective Date

An unsafe condition exists that requires the immediate adoption of this AD. The FAA has found that the risk to the flying public justifies waiving notice and comment prior to adoption of this rule because the compliance time in this AD is within 5 flight hours after the effective date of the AD. Therefore, we determined that notice and opportunity for public comment before issuing this AD are impracticable and that good cause exists for making this amendment effective in fewer than 30 days.

Comments Invited

This AD is a final rule that involves requirements affecting flight safety, and we did not precede it by notice and opportunity for public comment. We invite you to send any written relevant data, views, or arguments about this AD. Send your comments to an address listed under the **ADDRESSES** section. Include ''Docket No. FAA–2012–0603; Directorate Identifier 2012–NE–17–AD'' at the beginning of your comments. We specifically invite comments on the overall regulatory, economic, environmental, and energy aspects of this AD. We will consider all comments received by the closing date and may amend this AD because of those comments.

We will post all comments we receive, without change, to *http://www.regulations.gov,* including any personal information you provide. We will also post a report summarizing each substantive verbal contact with FAA personnel concerning this AD. Using the search function of the Web site, anyone can find and read the comments in any of our dockets, including, if provided, the name of the individual who sent the comment (or signed the comment on behalf of an association, business, labor union, etc.). You may review the DOT's complete Privacy Act Statement in the **Federal Register** published on April 11, 2000 (65 FR 19477–78).

Authority for This Rulemaking

Title 49 of the United States Code specifies the FAA's authority to issue rules on aviation safety. Subtitle I, section 106, describes the authority of the FAA Administrator. ''Subtitle VII: Aviation Programs,'' describes in more detail the scope of the Agency's authority.

We are issuing this rulemaking under the authority described in ''Subtitle VII, Part A, Subpart III, Section 44701: General requirements.'' Under that section, Congress charges the FAA with promoting safe flight of civil aircraft in air commerce by prescribing regulations for practices, methods, and procedures the Administrator finds necessary for safety in air commerce. This regulation is within the scope of that authority because it addresses an unsafe condition that is likely to exist or develop on products identified in this rulemaking action.

Regulatory Findings

We determined that this AD will not have federalism implications under Executive Order 13132. This AD will not have a substantial direct effect on the States, on the relationship between the national government and the States, or on the distribution of power and responsibilities among the various levels of government.

For the reasons discussed above, I certify this AD:

1. Is not a ''significant regulatory action'' under Executive Order 12866;
2. Is not a ''significant rule'' under the DOT Regulatory Policies and Procedures (44 FR 11034, February 26, 1979); and
3. Will not have a significant economic impact, positive or negative, on a substantial number of small entities under the criteria of the Regulatory Flexibility Act.

We prepared a regulatory evaluation of the estimated costs to comply with this AD and placed it in the AD docket.

List of Subjects in 14 CFR Part 39

Air transportation, Aircraft, Aviation safety, Incorporation by reference, Safety.

Adoption of the Amendment

Accordingly, under the authority delegated to me by the Administrator, the FAA amends 14 CFR part 39 as follows:

PART 39—AIRWORTHINESS DIRECTIVES

■ 1. The authority citation for part 39 continues to read as follows:

Authority: 49 U.S.C. 106(g), 40113, 44701.

§ 39.13 [Amended]

■ 2. The FAA amends § 39.13 by adding the following new airworthiness directive (AD):

2012–16–13 BRP-Powertrain GmbH & Co. KG (formerly BRP-Rotax GmbH & Co KG, Bombardier-Rotax GmbH & Co. KG, and Bombardier-Rotax GmbH): Amendment 39–17160; Docket No. FAA–2012–0603; Directorate Identifier 2012–NE–17–AD.

(a) Effective Date

This airworthiness directive (AD) becomes effective September 10, 2012.

(b) Affected ADs

None.

(c) Applicability

This AD applies to BRP-Powertrain GmbH & Co KG Rotax 912 F2; 912 F3; 912 F4; 912 S2; 912 S3; and 912 S4 reciprocating engines, with a fuel pump part number (P/N) 893114 having a serial number (S/N) listed in Table 1 to paragraph (c) of this AD:

TABLE 1 TO PARAGRAPH (C)—AFFECTED FUEL PUMP S/NS

11.3117 through 11.3325 inclusive.
11.4036 through 11.4355 inclusive.
11.4516 through 11.4595 inclusive.
12.0251 through 12.0270 inclusive.

(d) Reason

This AD was prompted by reports of fuel pumps having pressure side fuel hoses not meeting the design specification. We are issuing this AD to prevent pressure side fuel hose deterioration and contamination of the carburetor, which could result in an in-flight engine shutdown, forced landing and damage to the airplane.

(e) Actions and Compliance

Unless already done, within 5 flight hours after the effective date of the AD do the following:

(1) Replace the pressure side fuel hose on the fuel pump with a fuel hose eligible for installation on the pressure side of the fuel pump.

(2) Inspect the carburetors for contamination. Use paragraph 3.1.2 of BRP-Powertrain GmbH & Co KG, Rotax Aircraft Engines Alert Service Bulletin No. ASB–912–061R1, dated May 31, 2012, to perform your inspection.

(f) Definition

For the purpose of this AD, a fuel hose eligible for installation is one that was not from any of the affected fuel pumps with an S/N listed in Table 1 to paragraph (c) of this AD.

(g) Installation Prohibition

(1) After the effective date of this AD, do not install a P/N 893114 fuel pump with an S/N listed in Table 1 to paragraph (c) of this AD onto any engine, unless the pressure side fuel hose has been replaced as required by this AD.

(2) After the effective date of this AD, do not install a Rotax 912 engine with a P/N 893114 fuel pump with an S/N listed in Table 1 to paragraph (c) of this AD in any airplane unless it has been inspected and the pressure side fuel hose replaced as required by this AD.

(3) After the effective date of this AD, do approve for return to service any product or article with a fuel hose removed from a P/N 893114 fuel pump with an S/N listed in Table 1 to paragraph (c) of this AD.

(h) Alternative Methods of Compliance (AMOCs)

The Manager, Engine Certification Office, may approve AMOCs for this AD. Use the procedures found in 14 CFR 39.19 to make your request.

(i) Related Information

(1) For more information about this AD, contact Alan Strom, Aerospace Engineer, Engine Certification Office, FAA, Engine & Propeller Directorate, 12 New England Executive Park, Burlington, MA 01803; email: *alan.strom@faa.gov;* phone: 781–238–7143; fax: 781–238–7199.

(2) Refer to European Aviation Safety Agency AD 2012–0097–E, dated May 31, 2012, and AD 2012–0097R1, dated June 1, 2012, for related information.

(j) Material Incorporated by Reference

(1) The Director of the Federal Register approved the incorporation by reference (IBR) of the service information listed in this paragraph under 5 U.S.C. 552(a) and 1 CFR part 51.

(2) You must use this service information as applicable to do the actions required by this AD, unless the AD specifies otherwise.

(i) BRP-Powertrain GmbH & Co KG, Rotax Aircraft Engines Alert Service Bulletin No. ASB–912–061R1, dated May 31, 2012.

(ii) Reserved.

(3) For BRP-Powertrain GmbH & Co KG service information identified in this AD, contact BRP-Powertrain GmbH & Co KG, Welser Strasse 32, A–4623 Gunskirchen, Austria, or go to: *http://www.rotax-aircraft-engines.com.*

(4) You may view this service information at the FAA, Engine & Propeller Directorate, 12 New England Executive Park, Burlington, MA. For information on the availability of this material at the FAA, call 781–238–7125.

(5) You may view this service information at the National Archives and Records Administration (NARA). For information on the availability of this material at NARA, call 202–741–6030, or go to: *http://www.archives.gov/federal-register/cfr/ibr-locations.html.*

Issued in Burlington, Massachusetts, on July 30, 2012.

Peter A. White,

Manager, Engine & Propeller Directorate, Aircraft Certification Service.

[FR Doc. 2012–20748 Filed 8–23–12; 8:45 am]

BILLING CODE 4910–13–P

DEPARTMENT OF TRANSPORTATION

Federal Aviation Administration

14 CFR Part 71

[Docket No. FAA–2011–1334; Airspace Docket No. 11–ASO–43]

Amendment of Class E Airspace; Augusta, GA

AGENCY: Federal Aviation Administration (FAA), DOT.

ACTION: Final rule.

SUMMARY: This action amends Class E Airspace in Augusta, GA. The Bushe Non-Directional Beacon (NDB) and the Burke County NDB have been decommissioned and new Standard Instrument Approach Procedures have been developed at Augusta Regional Airport at Bush Field, Augusta, GA, and Burke County Airport, Waynesboro, GA, respectively. Airspace reconfiguration is necessary for the continued safety and management of instrument flight rules (IFR) operations within the Augusta, GA, airspace area. This action also updates the geographic coordinates of Burke County Airport.

DATES: Effective 0901 UTC, November 15, 2012. The Director of the Federal Register approves this incorporation by reference action under title 1, Code of Federal Regulations, part 51, subject to the annual revision of FAA Order 7400.9 and publication of conforming amendments.

FOR FURTHER INFORMATION CONTACT: John Fornito, Operations Support Group, Eastern Service Center, Federal Aviation Administration, P.O. Box 20636, Atlanta, Georgia 30320; telephone (404) 305–6364.

SUPPLEMENTARY INFORMATION:

History

On April 10, 2012, the FAA published in the **Federal Register** a notice of proposed rulemaking (NPRM) to amend Class E airspace in the Augusta, GA area (77 FR 21506). Interested parties were invited to participate in this rulemaking effort by submitting written comments on the proposal to the FAA. No comments were received. Subsequent to publication, the FAA found an error in the latitudinal coordinate for Burke County Airport and makes the correction in the rule. Except for editorial changes, and the change noted above, this rule is the same as published in the NPRM.

Class E airspace designations are published in paragraph 6005 of FAA Order 7400.9V dated August 9, 2011, and effective September 15, 2011, which is incorporated by reference in 14 CFR 71.1. The Class E airspace designations listed in this document will be published subsequently in the Order.

The Rule

This amendment to Title 14, Code of Federal Regulations (14 CFR) part 71 amends Class E airspace extending upward from 700 feet above the surface at Augusta, GA. Airspace reconfiguration is necessary due to the decommissioning of the Bushe NDB at Augusta Regional at Bush Field Airport, Augusta, GA, and the Burke County NDB at Burke County Airport, Waynesboro, GA, thereby cancelling the NDB approaches. This action ensures the continued safety and management of IFR operations within the Augusta, GA airspace area. This action also adjusts the latitude degree coordinate of the Burke County Airport from 32° to 33° to be in concert with the FAA's aeronautical database.

The FAA has determined that this regulation only involves an established

body of technical regulations for which frequent and routine amendments are necessary to keep them operationally current, is non-controversial and unlikely to result in adverse or negative comments. It, therefore, (1) is not a ''significant regulatory action'' under Executive Order 12866; (2) is not a ''significant rule'' under DOT Regulatory Policies and Procedures (44 FR 11034; February 26, 1979); and (3) does not warrant preparation of a Regulatory Evaluation as the anticipated impact is so minimal. Since this is a routine matter that will only affect air traffic procedures and air navigation, it is certified that this rule, when promulgated, will not have a significant economic impact on a substantial number of small entities under the criteria of the Regulatory Flexibility Act.

The FAA's authority to issue rules regarding aviation safety is found in Title 49 of the United States Code. Subtitle I, Section 106 describes the authority of the FAA Administrator. Subtitle VII, Aviation Programs, describes in more detail the scope of the agency's authority.

This rulemaking is promulgated under the authority described in Subtitle VII, Part A, Subpart I, Section 40103. Under that section, the FAA is charged with prescribing regulations to assign the use of airspace necessary to ensure the safety of aircraft and the efficient use of airspace. This regulation is within the scope of that authority as it amends controlled airspace in the Augusta, GA area.

Environmental Review

The FAA has determined that this action qualifies for categorical exclusion under the National Environmental Policy Act in accordance with FAA Order 1050.1E, ''Environmental Impacts: Policies and Procedures,'' paragraph 311a. This airspace action is not expected to cause any potentially significant environmental impacts, and no extraordinary circumstances exist that warrant preparation of an environmental assessment.

Lists of Subjects in 14 CFR Part 71

Airspace, Incorporation by reference, Navigation (air).

Adoption of the Amendment

In consideration of the foregoing, the Federal Aviation Administration proposes to amend 14 CFR part 71 as follows:

PART 71—DESIGNATION OF CLASS A, B, C, D, AND E AIRSPACE AREAS; AIR TRAFFIC SERVICE ROUTES; AND REPORTING POINTS

■ 1. The authority citation for part 71 continues to read as follows:

Authority: 49 U.S.C. 106(g); 40103, 40113, 40120; E.O. 10854, 24 FR 9565; 3 CFR, 1959–1963; Comp., p. 389.

§ 71.1 [Amended]

■ 2. The incorporation by reference in 14 CFR 71.1 of Federal Aviation Administration Order 7400.9V, Airspace Designations and Reporting Points, dated August 9, 2011, effective September 15, 2011, is amended as follows:

Paragraph 6005 Class E airspace areas extending upward from 700 feet or more above the surface of the earth.

* * * * *

ASO GA E5 Augusta, GA [Amended]

Augusta Regional at Bush Field Airport, GA
(Lat. 33°22′12″ N., long. 81°57′52″ W.)
Emory NDB
(Lat. 33°27′46″ N., long. 81°59′49″ W.)
Daniel Field
(Lat. 33°27′59″ N., long. 82°02′22″ W.)
Waynesboro, Burke County Airport, GA
(Lat. 33°02′29″ N., long. 82°00′10″ W.)
Millen Airport
(Lat. 32°53′37″ N., long. 81°57′55″ W.)
Millen NDB
(Lat. 32°53′41″ N., long. 81°58′01″ W.)

That airspace extending upward from 700 feet above the surface within an 8.6-mile radius of Augusta Regional at Bush Field Airport, and within 3.2 miles either side of the 168° bearing from the airport extending from the 8.6-mile radius to 12.5 miles south of the airport, and within a 7-mile radius of Daniel Field Airport, and within 8 miles west and 4 miles east of the 349° bearing from the Emory NDB extending from the 7-mile radius to 16 miles north of the Emory NDB, and within a 6.6-mile radius of Burke County Airport, and within a 7.3-mile radius of the Millen Airport, and within 4 miles east and 8 miles west of the 357° bearing from the Millen NDB extending from the 7.3-mile radius to 16 miles north of the airport.

Issued in College Park, Georgia, on August 16, 2012.

Barry A. Knight,

Manager, Operations Support Group, Eastern Service Center, Air Traffic Organization.

[FR Doc. 2012–20809 Filed 8–23–12; 8:45 am]

BILLING CODE 4910–13–P

DEPARTMENT OF HOUSING AND URBAN DEVELOPMENT

24 CFR Parts 25, 30, 201, 202, 203, and 206

[Docket No. FR–5622–F–01]

RIN 2502–AJ13

Federal Housing Administration: Strengthening Risk Management Through Responsible FHA-Approved Lenders

AGENCY: Office of the Assistant Secretary for Housing—Federal Housing Commissioner, HUD.

ACTION: Final rule; clarification and correction.

SUMMARY: As part of HUD's efforts to strengthen the risk management practices of the Federal Housing Administration (FHA), HUD published a final rule on April 20, 2010, revising its regulations pertaining to the FHA-approval of mortgage lenders. The April 20, 2010, final rule increased the net worth requirement for FHA-approved lenders and mortgagees, eliminated HUD's approval of loan correspondents, and amended the general approval standards for lenders and mortgagees. This final rule makes several nonsubstantive clarifications and corrections to the provisions of the April 20, 2010, final rule. The changes will improve the clarity of HUD's regulatory requirements and, thereby, facilitate program participant compliance and improve HUD's ability to monitor and enforce its risk management regulations.

DATES: *Effective Date:* September 24, 2012.

FOR FURTHER INFORMATION CONTACT: Richard Toma, Deputy Director, Office of Lender Activities and Program Compliance, Office of Housing, Department of Housing and Urban Development, 490 L'Enfant Plaza East SW., Room P3214, Washington, DC 20024–8000; telephone number 202–708–1515 (this is not a toll-free number). Persons with hearing or speech impairments may access this number through TTY by calling the toll-free Federal Relay Service at 800–877–8339.

SUPPLEMENTARY INFORMATION:

I. Background

As part of HUD's efforts to strengthen FHA risk management, HUD published a final rule on April 20, 2010, entitled, ''Federal Housing Administration: Continuation of FHA Reform; Strengthening Risk Management Through Responsible FHA-Approved

Lenders'' (75 FR 20718). The April 20, 2010, final rule increased the net worth requirement for FHA-approved lenders and mortgagees, eliminated HUD's approval of loan correspondents, and amended the general approval standards for lenders and mortgagees. This final rule makes the following nonsubstantive clarifications and corrections to the provisions of the April 20, 2010, final rule. The changes will improve the clarity of HUD's regulatory requirements and, thereby, facilitate program participant compliance and improve HUD's ability to monitor and enforce its risk management regulations.

A. Liquidity REQUIREMENTS for FHA-Approved Lenders and Mortgagees

The revised net worth requirements established by the April 20, 2010, final rule are codified in 24 CFR 202.5(n). As of May 20, 2011, FHA-approved non-small business lenders and mortgagees were required to have a minimum net worth of $1 million ''of which no less than 20 percent must be liquid assets consisting of cash or its equivalent acceptable to the Secretary'' (§ 202.5(n)(2)(iii)). As of that same date, existing FHA-approved small business lenders and mortgagees were required to have a minimum net worth of $500,000 ''of which no less than 20 percent must be liquid assets consisting of cash or its equivalent acceptable to the Secretary'' (§ 202.5(n)(2)(iv)).[1]

By May 20, 2013, all FHA-approved lenders and mortgagees, irrespective of size, are required to have a minimum net worth of $1 million, plus an additional net worth of one percent of the total volume in excess of $25 million of FHA single-family insured mortgages originated, underwritten, purchased, or serviced during the prior fiscal year. Further, the regulations require that ''[n]o less than 20 percent of the * * * required net worth must be liquid assets consisting of cash or its equivalent acceptable to the Secretary'' (§ 202.5(n)(3)(i)).

As the quoted language above indicates, the wording of the liquidity requirement differs slightly between § 202.5(n)(2)(iii) and (iv) (which establishes the requirements effective on May 20, 2011) and § 202.5(n)(3)(i) (which establishes the requirements effective on May 20, 2013). Specifically, § 202.5(n)(2)(iii) and (iv) omit the word ''required'' when referring to the portion of net worth that must be held in liquid assets. This difference is due to the grammatical context in which these provisions are located.

While the intent of the final rule was that the liquidity requirements apply solely to the *required minimum* net worth, HUD is concerned that the variation in wording is unclear and has the potential to confuse lenders and regulators alike. HUD has consistently interpreted the liquidity requirements as applying to the *required minimum* net worth; however, questions have arisen whether FHA-approved lenders and mortgagees are required to maintain liquid assets equivalent to 20 percent of their *total* net worth. In order to alleviate confusion and institute clarity, this final rule amends § 202.5(n)(2)(iii) and (iv) to explicitly refer to the approved lender or mortgagee's *required minimum* net worth.

In addition, this final rule makes a related technical correction to § 202.7, which sets forth requirements governing nonsupervised lenders and mortgagees. This final rule removes outdated paragraph (b)(2) of § 202.7, which formerly contained the liquidity requirements for nonsupervised lenders and mortgagees, but has been superseded by the liquidity requirements established by the April 20, 2010, final rule at § 202.5(n). Section 202.5(n) specifies that the new net worth and liquidity requirements ''apply to supervised and nonsupervised lenders and mortgagees.''

B. Definition of Sponsored Third-Party Originator

The April 20, 2010, final rule eliminated HUD's approval of loan correspondents. Loan correspondents may continue to participate in the origination of FHA mortgage loans as sponsored third-party originators through association with a sponsoring FHA-approved mortgagee, but sponsored third-party originators are no longer subject to the FHA lender approval process.

Removing the required HUD approval for loan correspondents was not meant to preclude FHA-approved mortgagees from acting as sponsored third-party originators. However, the current definition of a sponsored third-party originator in § 202.8(a)(3) could be read as prohibiting FHA-approved mortgagees from acting as sponsored third-party originators. It states that a ''third-party originator does not hold a Title I Contract of Insurance or Title II Origination Approval agreement * * *.'' This final rule revises the definition of a sponsored third-party originator to clarify that a sponsored third-party originator may hold a Title I Contract of Insurance or Title II Origination Approval Agreement if it is also an FHA-approved lender or mortgagee.

C. Consistent Use of the Term ''Sponsored Third-Party Originator'' in FHA Regulations

In addition, this rule will make technical corrections to HUD's regulations by removing references to loan correspondents, loan originators, and other outdated terms, where applicable. Where appropriate, this final rule replaces these terms with ''sponsored third-party originator.'' However, since HUD does not approve sponsored third-party originators, references to loan correspondents, loan originators, and like phrases will be removed without replacement where the regulations are applicable only to FHA-approved entities.

The HUD regulations affected by these corrections are those governing the Mortgagee Review Board (24 CFR part 25), civil money penalties (24 CFR part 30), FHA Title I property improvements and manufactured home loans (24 CFR part 201), approval of lending institutions and mortgagees (24 CFR part 202), single-family mortgage insurance (24 CFR part 203) and home equity conversions mortgage insurance (24 CFR part 206). The specific regulations revised by this final rule are §§ 25.3, 25.5, 25.6, 30.10, 30.36, 30.60, 201.2, 202.8, 203.5, 203.255, and 206.31.

II. Justification for Final Rulemaking

In general, HUD publishes a rule for public comment before issuing a rule for effect, in accordance with HUD's regulations on rulemaking at 24 CFR part 10. Part 10, however, provides, in § 10.1, for exceptions from that general rule where HUD finds good cause to omit advance notice and public participation. The good cause requirement is satisfied when the prior public procedure is ''impracticable, unnecessary, or contrary to the public interest.''

HUD finds that good cause exists to publish this rule for effect without soliciting public comment, on the basis that public procedure is unnecessary. All of the changes made by this rule are technical in nature and do not make any substantive changes to HUD's requirements for individuals and entities participating in FHA programs. This rule merely makes conforming changes to provisions regarding the liquidity requirements of FHA-approved lenders and mortgagees in order to provide clarification, removes or replaces obsolete references to ''loan

[1] A small business lender or mortgagee is an existing lender or mortgagee whose size is less than or equal to ''the size standard for its industry classification established by the Small Business Administration at 13 CFR 121.201 Sector 52 (Finance and Insurance), Subsector 522 (Credit Intermediation and Related Activities).''

correspondents'' and other outdated terms, and clarifies the original intent of the sponsored third-party originator definition.

III. Findings and Certifications

Regulatory Flexibility Act

The Regulatory Flexibility Act (RFA) (5 U.S.C. 601 *et seq.*) generally requires an agency to conduct a regulatory flexibility analysis of any rule subject to notice and comment rulemaking requirements unless the agency certifies that the rule will not have a significant economic impact on a substantial number of small entities. As discussed above in this preamble, this rule does not establish or revise any FHA program requirements. This final rule is limited to conforming changes, technical corrections, and clarifications that reflect existing requirements. The rule does not make any substantive changes to HUD's regulations and, therefore, does not affect a substantial number of small entities. Accordingly, for the above reasons, the undersigned certifies that this rule will not have a significant economic impact on a substantial number of small entities.

Executive Order 13132, Federalism

Executive Order 13132 (entitled ''Federalism'') prohibits an agency from publishing any rule that has federalism implications if the rule either imposes substantial direct compliance costs on state and local governments and is not required by statute, or the rule preempts state law, unless the agency meets the consultation and funding requirements of section 6 of the Executive Order. This rule will not have federalism implications and would not impose substantial direct compliance costs on state and local governments or preempt state law within the meaning of the Executive Order.

Environmental Impact

This rule does not direct, provide for assistance or loan and mortgage insurance for, or otherwise govern or regulate, real property acquisition, disposition, leasing, rehabilitation, alteration, demolition or new construction, or establish, revise, or provide for standards for construction or construction materials, manufactured housing, or occupancy. This rule is limited to clarification and corrections to HUD's regulations. Accordingly, under 24 CFR 50.19(c)(1), this rule is categorically excluded from environmental review under the National Environmental Policy Act of 1969 (42 U.S.C. 4321).

Unfunded Mandates Reform Act

Title II of the Unfunded Mandates Reform Act of 1995 (2 U.S.C. 1531–1538) (UMRA) establishes requirements for federal agencies to assess the effects of their regulatory actions on state, local, and tribal governments, and on the private sector. This final rule would not impose any federal mandates on any state, local, or tribal governments, or on the private sector, within the meaning of the UMRA.

Catalogue of Federal Domestic Assistance

The Catalogue of Federal Domestic Assistance Number for the principal FHA single-family mortgage insurance program is 14.117.

List of Subjects

24 CFR Part 25

Administrative practice and procedure, Loan programs—housing and community development, Organization and functions (Government agencies), Reporting and recordkeeping requirements.

24 CFR Part 30

Administrative practice and procedure, Grant programs—housing and community development, Loan programs—housing and community development, Mortgages, Penalties.

24 CFR Part 201

Claims, Health facilities, Historic preservation, Home improvement, Loan programs—housing and community development, Manufactured homes, Mortgage insurance, Reporting and recording requirements.

24 CFR Part 202

Administrative practice and procedure, Home improvement, Manufactured homes, Mortgage insurance, Reporting and recordkeeping requirements.

24 CFR Part 203

Hawaiian Natives, Home improvement, Indians—lands, Loan programs—housing and community development, Mortgage insurance, Reporting and recordkeeping requirements, Solar energy.

24 CFR Part 206

Aged, Condominiums, Loan programs—housing and community development, Mortgage insurance, Reporting and recordkeeping requirements.

Accordingly, for the reasons stated in the preamble, HUD amends 24 CFR parts 25, 30, 201, 202, 203, and 206, as follows:

PART 25—MORTGAGEE REVIEW BOARD

■ 1. The authority citation for part 25 continues to read as follows:

Authority: 12 U.S.C. 1708(c), 1708(d), 1709(s), 1715b, and 1735(f)–14; 42 U.S.C. 3535(d).

■ 2. In § 25.3, remove the definition of ''*Loan correspondent''* and revise the definition of ''*Mortgagee''* to read as follows:

§ 25.3 Definitions.

* * * * *

Mortgagee. For purposes of this part, the term ''mortgagee'' includes:

(1) The original lender under the mortgage, as that term is defined at sections 201(a) and 207(a)(1) of the National Housing Act (12 U.S.C. 1707(a), 1713(a)(1));

(2) A lender, as defined in this section;

(3) A branch office or subsidiary of the mortgagee or lender; or

(4) Successors and assigns of the mortgagee or lender, as are approved by the Commissioner.

* * * * *

■ 3. In § 25.5, revise paragraphs (d)(1)(ii) and (e)(1)(ii) to read as follows:

§ 25.5 Administrative actions.

* * * * *

(d) * * *

(1) * * *

(ii) During the period of suspension, a lender may not originate new Title I loans under its Title I Contract of Insurance or apply for a new Contract of Insurance.

* * * * *

(e) * * *

(1) * * *

(ii) During the period of withdrawal, a lender may not originate new Title I loans under its Title I Contract of Insurance or apply for a new Contract of Insurance. The Board may limit the geographical extent of the withdrawal, or limit its scope (e.g., to either the single family or multifamily activities of a withdrawn mortgagee). Upon the expiration of the period of withdrawal, the mortgagee may file a new application for approval under 24 CFR part 202.

* * * * *

■ 4. Revise § 25.6(cc) to read as follows:

§ 25.6 Violations creating grounds for administrative action.

* * * * *

(cc) Violation by a Title I lender of any of the applicable provisions of this section or 24 CFR 202.11(a)(2).

* * * * *

PART 30—CIVIL MONEY PENALTIES: CERTAIN PROHIBITED CONDUCT

■ 5. The authority citation for part 30 continues to read as follows:

Authority: 12 U.S.C. 1701q–1, 1703, 1723i, 1735f–14, and 1735f–15; 15 U.S.C. 1717a; 28 U.S.C. 2461 note; 42 U.S.C. 1437z–1 and 3535(d).

■ 6. In § 30.10, remove the definition of ''*Loan correspondent''* and add the definition of ''*Sponsored third-party originator''* in alphabetical order to read as follows:

§ 30.10 Definitions.

* * * * *

*Sponsored third-party originato*r. A sponsored third-party originator as defined at § 202.8 of this title.

■ 7. Revise § 30.36(a)(8) to read as follows:

§ 30.36 Other participants in FHA programs.

(a) * * *

(8) Sponsored third-party originators;

* * * * *

■ 8. In § 30.60, revise the section heading, paragraph (a) introductory text, and paragraph (a)(3) to read as follows:

§ 30.60 Dealers or sponsored third-party originators.

(a) General. The Assistant Secretary for Housing-Federal Housing Commissioner, or his or her designee, may initiate a civil money penalty action against any dealer or sponsored third-party originator that violates section 2(b)(7) of the National Housing Act (12 U.S.C. 1703). Such violations include, but are not limited to:

* * * * *

(3) Failing to sign a credit application if the dealer or sponsored third-party originator assisted the borrower in completing the application;

* * * * *

PART 201—TITLE I PROPERTY IMPROVEMENT AND MANUFACTURED HOME LOANS

■ 9. The authority citation for part 201 is amended to read as follows:

Authority: 12 U.S.C. 1703; 42 U.S.C. 3535(d).

■ 10. In § 201.2, remove the definition of ''*Loan correspondent''* and revise the definition of ''*Lender''* to read as follows:

§ 201.2 Definitions.

* * * * *

Lender means a financial institution that:

(1) Holds a valid Title I contract of insurance and is approved by the Secretary under 24 CFR part 202 to originate, purchase, hold, service, and/or sell loans insured under this part; or

(2) Is under suspension or holds a Title I contract of insurance that has been terminated, but that remains responsible for servicing or selling Title I loans that it holds and is authorized to file insurance claims on such loans.

* * * * *

PART 202—APPROVAL OF LENDING INSTITUTIONS AND MORTGAGEES

■ 11. The authority citation for part 202 continues to read as follows:

Authority: 12 U.S.C. 1703, 1709, and 1715b; 42 U.S.C. 3535(d).

■ 12. In § 202.5, revise paragraphs (n)(2)(iii) and (iv) to read as follows:

§ 202.5 General approval standards.

* * * * *

(n) * * *

(2) * * *

(iii) *Net worth requirements for non-small businesses.* Each approved lender or mortgagee that exceeds the size standard for its industry classification established by the Small Business Administration at 13 CFR 121.201 Sector 52 (Finance and Insurance), Subsector 522 (Credit Intermediation and Related Activities) shall have a required minimum net worth of not less than $1,000,000. No less than 20 percent of the approved lender or mortgagee's required minimum net worth must be liquid assets consisting of cash or its equivalent acceptable to the Secretary.

(iv) *Net worth requirements for small businesses.* Each approved lender or mortgagee that meets the size standard for its industry classification established by the Small Business Administration at 13 CFR 121.201 Sector 52 (Finance and Insurance), Subsector 522 (Credit Intermediation and Related Activities) shall have a required minimum net worth of not less than $500,000. No less than 20 percent of the approved lender or mortgagee's required minimum net worth must be liquid assets consisting of cash or its equivalent acceptable to the Secretary. If, based on the audited financial statement or other financial report that is required to be prepared at the end of its fiscal year and provided to HUD at the commencement of the new fiscal year, an approved lender or mortgagee no longer meets the Small Business Administration size standard for its industry classification, the approved lender or mortgagee shall meet the net worth requirements set forth in paragraph (n)(2)(iii) of this section for a non-small business approved lender or mortgagee by the last day of the fiscal year in which the audited financial statement or other financial report, as applicable, was submitted.

* * * * *

■ 13. In § 202.7, revise paragraph (b)(1), remove paragraph (b)(2), and redesignate paragraphs (b)(3), (4), and (5) as paragraphs (b)(2), (3), and (4), respectively.

The revision reads as follows:

§ 202.7 Nonsupervised lenders and mortgagees.

* * * * *

(b) * * *

(1) *Net worth and liquid assets.* The net worth and liquidity requirements appear in § 202.5(n).

* * * * *

■ 14. In § 202.8:

■ a. Revise the section heading;

■ b. In paragraph (a), revise the definition of ''Sponsored third-party originator'';

■ c. Revise paragraph (b); and

■ d. Remove paragraph (c).

The revisions read as follows:

§ 202.8 Sponsored third-party originators.

* * * * *

(a) * * *

Sponsored third-party originator. A sponsored third-party originator may hold a Title I Contract of Insurance or Title II Origination Approval Agreement if it is an FHA-approved lender or mortgagee. If the sponsored third-party originator is not an FHA-approved lender or mortgagee, then the sponsored third-party originator may not hold a Title I Contract of Insurance or Title II Origination Approval Agreement. A sponsored third-party originator is authorized to originate Title I direct loans or Title II mortgage loans for sale or transfer to a sponsor or sponsors, as defined in this section, that holds a valid Title I Contract of Insurance or Title II Origination Approval Agreement and is not under suspension, subject to the sponsor determining that the third-party originator has met the eligibility criteria of paragraph (b) of this section.

(b) *Eligibility to originate loans to be insured by FHA.* A sponsored third-party originator may originate loans to be insured by FHA, provided that:

(1) The sponsored third-party originator is working with and through an FHA-approved lender or mortgagee; and

(2) The sponsored third-party originator or an officer, partner, director, principal, manager, supervisor, loan processor, or loan originator of the

sponsored third-party originator has not been subject to the sanctions or administrative actions listed in § 202.5(j), as determined and verified by the FHA-approved lender or mortgagee.

■ 15. Revise § 202.12(a)(1)(ii) to read as follows:

§ 202.12 Title II.

* * * * *

(a) * * *

(1) * * *

(ii) *Customary lending practices.* The customary lending practices of a mortgagee include all single family insured mortgages originated by the mortgagee, including mortgages that were originated by the mortgagee's sponsored third-party originator(s).

* * * * *

PART 203—SINGLE FAMILY MORTGAGE INSURANCE

■ 16. The authority citation for part 203 continues to read as follows:

Authority: 12 U.S.C. 1709, 1710, 1715b, 1715z–16, 1715u, and 1717z-21; 42 U.S.C. 3535(d).

■ 17. Revise § 203.5(e)(3) to read as follows:

§ 203.5 Direct Endorsement process.

* * * * *

(e) * * *

(3) A mortgagee and an appraiser must ensure that an appraisal and related documentation satisfy FHA appraisal requirements, and both bear responsibility for the quality of the appraisal in satisfying such requirements. A Direct Endorsement Mortgagee that submits, or causes to be submitted, an appraisal or related documentation that does not satisfy FHA requirements is subject to administrative sanction by the Mortgagee Review Board pursuant to parts 25 and 30 of this title.

■ 18. Revise § 203.255(b)(11) to read as follows:

§ 203.255 Insurance of mortgage.

* * * * *

(b) * * *

(11) A mortgage certification on a form prescribed by the Secretary, stating that the authorized representative of the mortgagee who is making the certification has personally reviewed the mortgage documents and the application for insurance endorsement, and certifying that the mortgage complies with the requirements of paragraph (b) of this section. The certification shall incorporate each of the mortgagee certification items that apply to the mortgage loan submitted for endorsement, as set forth in the applicable handbook or similar publication that is distributed to all Direct Endorsement mortgagees;

* * * * *

PART 206—HOME EQUITY CONVERSION MORTGAGE INSURANCE

■ 19. The authority citation for part 206 continues to read as follows:

Authority: 12 U.S.C. 1715b, 1715z–1720; 42 U.S.C. 3535(d).

■ 20. In § 206.31, revise paragraph (a)(1) to read as follows:

§ 206.31 Allowable charges and fees.

(a) * * *

(1) A charge to compensate the mortgagee for expenses incurred in originating and closing the mortgage loan, which may be fully financed with the mortgage. The Secretary may establish limitations on the amount of any such charge. HUD will publish any such limit in the **Federal Register** at least 30 days before the limitation takes effect. The mortgagor is not permitted to pay any additional origination fee of any kind to a mortgage broker or sponsored third-party originator. A mortgage broker's fee can be included as part of the origination fee only if the mortgage broker is engaged independently by the homeowner and there is no financial interest between the mortgage broker and the mortgagee.

* * * * *

Dated: August 20, 2012.

Carol J. Galante,

Acting Assistant Secretary for Housing—Federal Housing Commissioner.

[FR Doc. 2012–20924 Filed 8–23–12; 8:45 am]

BILLING CODE 4210–67–P

EQUAL EMPLOYMENT OPPORTUNITY COMMISSION

29 CFR Part 1614

RIN 3046–ZA00

Change of Address for Merit Systems Protection Board

AGENCY: Equal Employment Opportunity Commission.

ACTION: Final rule.

SUMMARY: This final rule revises an existing EEOC regulation to correct the address of the Merit Systems Protection Board.

DATES: Effective August 24, 2012.

FOR FURTHER INFORMATION CONTACT: Thomas J. Schlageter, Assistant Legal Counsel, (202) 663–4668, or Danielle J. Hayot, Senior Attorney, (202) 663–4695, Office of Legal Counsel, 131 M St. NE., Washington, DC 20507. Copies of this final rule are available in the following alternate formats: Large print, Braille, electronic computer disk, and audio-tape. Requests for this notice in an alternative formal should be made to the Publications Center at 1–800–699–3362 (voice), 1–800–800–3302 (TTY), or 703–821–2098 (Fax—this is not a toll free number).

SUPPLEMENTARY INFORMATION:

Regulatory Procedures

Executive Order 12866

This action pertains to agency organization, management or personnel matters and therefore is not a rule within the meaning of section 3(d)(3) of Executive Order 12866.

Paperwork Reduction Act

This regulation contains no new information collection requirements subject to review by the Office of Management and Budget under the Paperwork Reduction Act (44 U.S.C. chapter 35).

Regulatory Flexibility Act

The Commission certifies under 5 U.S.C. 605(b) that this rule will not have a significant economic impact on a substantial number of small entities because it does not affect any small business entities. The regulation affects only federal agencies, federal employees, and applicants for federal employment. For this reason, a regulatory flexibility analysis is not required.

Unfunded Mandates Reform Act of 1995

This final rule will not result in the expenditure by State, local, or tribal governments, in the aggregate, or by the private sector, of $100 million or more in any one year, and it will not significantly or uniquely affect small governments. Therefore, no actions were deemed necessary under the provisions of the Unfunded Mandates Reform Act of 1995.

Congressional Review Act

This action pertains to the Commission's management, personnel and organization and does not substantially affect the rights or obligations of non-agency parties and, accordingly, is not a ''rule'' as that term is used by the Congressional Review Act (Subtitle E of the Small Business Regulatory Enforcement Fairness Act of 1996 (SBREFA)). Therefore, the reporting requirement of 5 U.S.C. 801 does not apply.

List of Subjects in 29 CFR Part 1614

Administrative practice and procedure, equal employment opportunity, government employees.

For the Commission.

Dated: August 2, 2012.

Jacqueline A. Berrien,

Chair.

Accordingly, the Equal Employment Opportunity Commission amends 29 CFR part 1614 as follows:

PART 1614—FEDERAL SECTOR EQUAL EMPLOYMENT OPPORTUNITY

■ 1. The authority citation for part 1614 continues to read as follows:

Authority: 29 U.S.C. 206(d), 633a, 791 and 794a; 42 U.S.C. 2000e–16 and 2000ff–6(e); E.O. 10577, 3 CFR, 1954–1958 Comp., p. 218; E.O. 11222, 3 CFR 1964–1965 Comp., p. 306; E.O. 11478, 3 CFR, 1969 Comp., p. 133; E.O. 12106, 3 CFR, 1978 Comp., p. 263; Reorg. Plan No. 1 of 1978, 3 CFR, 1978 Comp., p. 321.

§ 1614.303 [Amended]

■ 2. In § 1614.303, paragraph (d) is amended by removing the text ''Clerk of the MSPB, 1120 Vermont Ave.'' and adding, in its place, the text ''Clerk of the Board, MSPB, 1615 M Street''.

[FR Doc. 2012–20867 Filed 8–23–12; 8:45 am]

BILLING CODE 6570–01–P

DEPARTMENT OF HOMELAND SECURITY

Coast Guard

33 CFR Part 117

[Docket No. USCG–2012–0746]

Drawbridge Operation Regulations; Gulf Intracoastal Waterway, St. Petersburg/Tampa, FL

AGENCY: Coast Guard, DHS.

ACTION: Notice of temporary deviations from regulations.

SUMMARY: The Coast Guard has issued temporary deviations from the operating schedules that govern seven bridges in St. Petersburg and Tampa, Florida. The deviations are necessary to allow for the safe transportation of officials and participants to the Republican National Convention (RNC). These deviations will result in the seven bridges remaining in the closed position for the time periods listed. This temporary deviation affects the following bridges: The Walsingham Road/Indian Rocks Beach (CR 688) Bridge; the Park Boulevard (CR 694) Bridge; the Welch/Tom Stuart Causeway/150th Avenue Bridge; the Treasure Island Causeway Bridge; the Corey Causeway/Pasadena Avenue Bridge; the Pinellas Bayway Structure ''C'' (SR 679) Bridge; and Johns Pass Bridge.

DATES: These deviations are effective from 3 p.m. on August 26, 2012 through 7 p.m. on August 30, 2012.

ADDRESSES: Documents mentioned in this preamble as being available in the docket are part of docket USCG–2012–0746 and are available online by going to *http://www.regulations.gov,* inserting USCG–2012–0746 in the ''Keyword'' box and then clicking ''Search''. They are also available for inspection or copying at the Docket Management Facility (M–30), U.S. Department of Transportation, West Building Ground Floor, Room W12–140, 1200 New Jersey Avenue SE., Washington, DC 20590, between 9 a.m. and 5 p.m., Monday through Friday, except Federal holidays.

FOR FURTHER INFORMATION CONTACT: If you have questions on this rule, call or email Michael Lieberum, Seventh District Bridge Branch, Coast Guard; telephone (305) 415–6744, email *Michael.B.Lieberum@uscg.mil.* If you have questions on viewing the docket, call Renee V. Wright, Program Manager, Docket Operations, telephone (202) 366–9826.

SUPPLEMENTARY INFORMATION: Coast Guard Sector St Petersburg, FL has requested temporary modifications to the operating schedules of seven bridges in St. Petersburg and Tampa, FL. Unrestricted vehicle access on these bridges during peak traffic periods is necessary to ensure the security and safety of delegates and officials at the RNC. Bridge openings during the listed times could disrupt or endanger the safe transit of officials and delegates between their hotels and the site of the RNC. Numerous Federal, State, and local agencies, including U.S. Secret Service, Federal Bureau of Investigation, Customs and Border Protection, U.S. Coast Guard, and the Joint Terrorism Task Force have developed comprehensive security plans to protect participants and the public during the RNC. As part of the comprehensive effort, these bridge deviations are necessary for the security and safety of delegates, officials, and participants for the 2012 Republican National Convention.

The seven bridges affected by this temporary deviation are: the Walsingham Road/Indian Rocks Beach (CR 688) Bridge; the Park Boulevard (CR 694) Bridge; the Welch/Tom Stuart Causeway/150th Avenue Bridge; the Treasure Island Causeway Bridge; the Corey Causeway/Pasadena Avenue Bridge; the Pinellas Bayway Structure ''C'' (SR 679) Bridge; and Johns Pass Bridge across Johns Pass, Madeira Beach, Florida.

These deviations will result in these seven bridges remaining in the closed position at certain times during the RNC from August 26, 2012, through August 30, 2012. The temporary deviations will close these bridges during the following periods: from 3:30 p.m. through 7:30 p.m. on August 26, 2012; 11 a.m. to 2 p.m. and 3:30 p.m. to 6:30 p.m. on August 27, 2012; 3:30 p.m. to 6:30 p.m. on August 28, 2012; 3:30 p.m. to 6:30 p.m. on August 29, 2012; and from 3:30 p.m. to 6:30 p.m. on August 30, 2012. Tugs and tugs with tows are not exempt from this deviation.

The details and regular operating schedule for each bridge are set forth below.

1. *Walsingham Road/Indian Rocks Beach (CR 688) Bridge, mile 128.2.* The normal operating schedule for the Walsingham Road/Indian Rocks Beach (CR 688) Bridge is set forth in 33 CFR 117.5. 33 CFR 117.5 requires the bridge to open promptly and fully for the passage of vessels when a request or signal to open is given in accordance with this subpart. This bascule bridge has a vertical clearance of 21 feet in the closed position. Vessels are permitted to transit under this bridge in the closed position.

2. *Park Boulevard (CR 694) Bridge, mile 126.0.* The normal operating schedule for the Park Boulevard Bridge is set forth in 33 CFR 117.5. 33 CFR 117.5 requires the bridge to open promptly and fully for the passage of vessels when a request or signal to open is given in accordance with this subpart. This bascule bridge has a vertical clearance of 20 feet in the closed position. Vessels are permitted to transit under this bridge in the closed position.

3. *Welch/Tom Stuart Causeway/150th Avenue Bridge, mile 122.8.* The normal operating schedule for the Welch/Tom Stuart Causeway/150th Avenue Bridge is set forth in 33 CFR 117.287(h). 33 CFR 117.287(h) requires the bridge to open on signal, except that from 9:30 a.m. to 6 p.m. on Saturdays, Sundays, and Federal holidays, the draw need be opened only on the hour, 20 minutes after the hour and 40 minutes after the hour. This bascule bridge has a vertical clearance of 25 feet in the closed position. Vessels are permitted to transit under this bridge in the closed position.

4. *Treasure Island Causeway Bridge, mile 119.0.* The normal operating schedule for the Treasure Island Causeway Bridge is set forth in 33 CFR 117.5. 33 CFR 117.5 requires the bridge to open promptly and fully for the

passage of vessels when a request or signal to open is given in accordance with this subpart. This bascule bridge has a vertical clearance of 21 feet in the closed position. Vessels are permitted to transit under this bridge in the closed position.

5. *Corey Causeway/Pasadena Avenue Bridge, mile 117.7.* The normal operating schedule for the Corey Causeway/Pasadena Avenue Bridge is set forth in 33 CFR 117.287(f). 33 CFR 117.287(f) requires the bridge to open on signal, except that from 8 a.m. to 7 p.m. Monday through Friday and 10 a.m. to 7 p.m. on Saturdays, Sundays, and Federal holidays, the draw need be opened only on the hour, 20 minutes after the hour and 40 minutes after the hour. This bascule bridge has a vertical clearance of 23 feet in the closed position. Vessels are permitted to transit under this bridge in the closed position.

6. *Pinellas Bayway Structure ''C'' (SR 679) Bridge, mile 114.0.* The normal operating schedule for the Pinellas Bayway Structure ''C'' (SR 679) Bridge is set forth in 33 CFR 117.287(e). 33 CFR 117.287(e) requires the bridge to open on signal, except that from 7 a.m. to 7 p.m., the draw need open only on the hour, 20 minutes after the hour and 40 minutes after the hour. This bascule bridge has a vertical clearance of 25 feet in the closed position. Vessels are permitted to transit under this bridge in the closed position.

7. *Johns Pass Bridge, mile 1.0.* The normal operating schedule for the Johns Pass Bridge is set forth in 33 CFR 117.5. 33 CFR 117.5 requires the bridge to open promptly and fully for the passage of vessels when a request or signal to open is given in accordance with this subpart. This bascule bridge has a vertical clearance of 28 feet in the closed position. Vessels are permitted to transit under this bridge in the closed position.

Any vessel requiring emergency opening of any of these seven bridges should make a request to the Captain of the Port St. Petersburg by telephone at (727) 824–7524.

In accordance with 33 CFR 117.35(e), these drawbridges must return to their regular operating schedules immediately at the end of the designated time period. These deviations from the operating regulations are authorized under 33 CFR 117.35.

Dated: August 15, 2012.

B.L. Dragon,

Bridge Program Director, Seventh Coast Guard District.

[FR Doc. 2012–20829 Filed 8–23–12; 8:45 am]

BILLING CODE 9110–04–P

DEPARTMENT OF HOMELAND SECURITY

Coast Guard

33 CFR Part 165

[Docket No. USCG–2012–0137]

RIN 1625–AA00

Safety Zone; Swim Around Charleston, Charleston, SC

AGENCY: Coast Guard, DHS.

ACTION: Temporary final rule.

SUMMARY: The Coast Guard is establishing a temporary moving safety zone during the Swim Around Charleston, a swimming race occurring on waters of the Wando River, the Cooper River, Charleston Harbor, and the Ashley River, in Charleston, South Carolina. The Swim Around Charleston is scheduled to take place on Sunday, September 23, 2012. The temporary safety zone is necessary for the safety of the swimmers, participant vessels, spectators, and the general public during the event. Persons and vessels are prohibited from entering, transiting through, anchoring in, or remaining within the safety zone unless authorized by the Captain of the Port Charleston or a designated representative.

DATES: This rule is effective from 7 a.m. until 2 p.m. on September 23, 2012.

ADDRESSES: Documents mentioned in this preamble are part of docket USCG–2012–0137. To view documents mentioned in this preamble as being available in the docket, go to *http://www.regulations.gov*, type the docket number in the ''SEARCH'' box and click ''SEARCH.'' Click on Open Docket Folder on the line associated with this rulemaking. You may also visit the Docket Management Facility in Room W12–140 on the ground floor of the Department of Transportation West Building, 1200 New Jersey Avenue SE., Washington, DC 20590, between 9 a.m. and 5 p.m., Monday through Friday, except Federal holidays.

FOR FURTHER INFORMATION CONTACT: If you have questions on this rule, call or email Lieutenant Junior Grade John R. Santorum, Sector Charleston Office of Waterways Management, Coast Guard; telephone 843–740–3184, email *John.R.Santorum@uscg.mil*. If you have questions on viewing or submitting material to the docket, call Renee V. Wright, Program Manager, Docket Operations, telephone 202–366–9826.

SUPPLEMENTARY INFORMATION:

Table of Acronyms

DHS Department of Homeland Security
FR **Federal Register**
NPRM Notice of Proposed Rulemaking

A. Regulatory History and Information

On March, 13 2012, we published a notice of proposed rulemaking (NPRM) entitled Safety Zone; Swim Around Charleston, Charleston, SC in the **Federal Register** (77 FR 14700). We received no comments on the proposed rule. No public meeting was requested, and none was held.

Under 5 U.S.C. 553(d)(3), the Coast Guard finds that good cause exists for making this rule effective less than 30 days after publication in the **Federal Register**. This event will occur before 30 days have elapsed after the publication of the rule in the **Federal Register**. Insufficient time was available to provide both a period for meaningful comment and also a 30 day period after publication for the effective date of this temporary final rule.

B. Basis and Purpose

(a) The legal basis for the rule is the Coast Guard's authority to establish regulated navigation areas and other limited access areas: 33 U.S.C. 1231; 46 U.S.C. Chapter 701, 3306, 3703; 50 U.S.C. 191, 195; 33 CFR 1.05–1, 6.04–1, 6.04–6, 160.5; Pub. L. 107–295, 116 Stat. 2064; Department of Homeland Security Delegation No. 0170.1.

(b) The purpose of the rule is to ensure the safety of the swimmers, participant vessels, spectators, and the general public during the Swim Around Charleston.

C. Discussion of Comments, Changes and the Final Rule

The Coast Guard did not receive any comments to the proposed rule, and no changes were made to the regulatory text.

D. Regulatory Analyses

We developed this rule after considering numerous statutes and executive orders related to rulemaking. Below we summarize our analyses based on 13 of these statutes or executive orders.

1. Regulatory Planning and Review

This rule is not a significant regulatory action under section 3(f) of Executive Order 12866, Regulatory Planning and Review, as supplemented by Executive Order 13563, Improving Regulation and Regulatory Review, and does not require an assessment of potential costs and benefits under section 6(a)(3) of Executive Order 12866 or under section 1 of Executive Order 13563. The office of Management and Budget has not reviewed it under those

Orders. The economic impact of this rule is not significant for the following reasons: (1) The safety zone will only be enforced for a total of seven hours; (2) the safety zone will move with the participant vessels so that once the swimmers clear a portion of the waterway, the safety zone will no longer be enforced in that portion of the waterway; (3) although persons and vessels may not enter, transit through, anchor in, or remain within the safety zone without authorization from the Captain of the Port Charleston or a designated representative, they may operate in the surrounding area during the enforcement period; (4) persons and vessels may still enter, transit through, anchor in, or remain within the safety zone if authorized by the Captain of the Port Charleston or a designated representative; and (5) the Coast Guard will provide advance notification of the safety zone to the local maritime community by Local Notice to Mariners and Broadcast Notice to Mariners.

2. Impact on Small Entities

The Regulatory Flexibility Act of 1980 (RFA), 5 U.S.C. 601–612, as amended, requires federal agencies to consider the potential impact of regulations on small entities during rulemaking. The term ''small entities'' comprises small businesses, not-for-profit organizations that are independently owned and operated and are not dominant in their fields, and governmental jurisdictions with populations of less than 50,000. The Coast Guard certifies under 5 U.S.C. 605(b) that this rule will not have a significant economic impact on a substantial number of small entities.

(1) This rule would affect the following entities, some of which may be small entities: The owners or operators of vessels intending to transit or anchor in a portion of the Wando River, the Cooper River, Charleston Harbor, or the Ashley River in Charleston, South Carolina from 7 a.m. until 2 p.m. on September 23, 2012.

(2) For the reasons discussed in the Regulatory Planning and Review section above, this rule will not have a significant economic impact on a substantial number of small entities.

3. Assistance for Small Entities

Under section 213(a) of the Small Business Regulatory Enforcement Fairness Act of 1996 (Pub. L. 104–121), we want to assist small entities in understanding this rule. If the rule would affect your small business, organization, or governmental jurisdiction and you have questions concerning its provisions or options for compliance, please contact the person listed in the **FOR FURTHER INFORMATION CONTACT**, above.

Small businesses may send comments on the actions of Federal employees who enforce, or otherwise determine compliance with, Federal regulations to the Small Business and Agriculture Regulatory Enforcement Ombudsman and the Regional Small Business Regulatory Fairness Boards. The Ombudsman evaluates these actions annually and rates each agency's responsiveness to small business. If you wish to comment on actions by employees of the Coast Guard, call 1–888–REG–FAIR (1–888–734–3247). The Coast Guard will not retaliate against small entities that question or complain about this rule or any policy or action of the Coast Guard.

4. Collection of Information

This rule will not call for a new collection of information under the Paperwork Reduction Act of 1995 (44 U.S.C. 3501–3520).

5. Federalism

A rule has implications for federalism under Executive Order 13132, Federalism, if it has a substantial direct effect on States, on the relationship between the national government and the States, or on the distribution of power and responsibilities among the various levels of government. We have analyzed this rule under that Order and determined that this rule does not have implications for federalism.

6. Protest Activities

The Coast Guard respects the First Amendment rights of protesters. Protesters are asked to contact the person listed in the **FOR FURTHER INFORMATION CONTACT** section to coordinate protest activities so that your message can be received without jeopardizing the safety or security of people, places or vessels.

7. Unfunded Mandates Reform Act

The Unfunded Mandates Reform Act of 1995 (2 U.S.C. 1531–1538) requires Federal agencies to assess the effects of their discretionary regulatory actions. In particular, the Act addresses actions that may result in the expenditure by a State, local, or tribal government, in the aggregate, or by the private sector of $100,000,000 (adjusted for inflation) or more in any one year. Though this rule will not result in such an expenditure, we do discuss the effects of this rule elsewhere in this preamble.

8. Taking of Private Property

This rule will not cause a taking of private property or otherwise have taking implications under Executive Order 12630, Governmental Actions and Interference with Constitutionally Protected Property Rights.

9. Civil Justice Reform

This rule meets applicable standards in sections 3(a) and 3(b)(2) of Executive Order 12988, Civil Justice Reform, to minimize litigation, eliminate ambiguity, and reduce burden.

10. Protection of Children

We have analyzed this rule under Executive Order 13045, Protection of Children from Environmental Health Risks and Safety Risks. This rule is not an economically significant rule and does not create an environmental risk to health or risk to safety that may disproportionately affect children.

11. Indian Tribal Governments

This rule does not have tribal implications under Executive Order 13175, Consultation and Coordination with Indian Tribal Governments, because it does not have a substantial direct effect on one or more Indian tribes, on the relationship between the Federal Government and Indian tribes, or on the distribution of power and responsibilities between the Federal Government and Indian tribes.

12. Energy Effects

This action is not a ''significant energy action'' under Executive Order 13211, Actions Concerning Regulations That Significantly Affect Energy Supply, Distribution, or Use.

13. Technical Standards

This rule does not use technical standards. Therefore, we did not consider the use of voluntary consensus standards.

14. Environment

We have analyzed this rule under Department of Homeland Security Management Directive 023–01 and Commandant Instruction M16475.lD, which guide the Coast Guard in complying with the National Environmental Policy Act of 1969 (NEPA) (42 U.S.C. 4321–4370f), and have determined that this action is one of a category of actions that do not individually or cumulatively have a significant effect on the human environment. This rule involves a temporary moving safety zone on waters of the Wando River, the Cooper River, Charleston Harbor, and the Ashley River, in Charleston, South Carolina during the Swim Around Charleston event on Sunday, September 23, 2012. Persons and vessels are prohibited from

entering, transiting through, anchoring in, or remaining within the safety zone unless authorized by the Captain of the Port Charleston or a designated representative. This rule is categorically excluded from further review under paragraph (34)(g) of Figure 2–1 of the Commandant Instruction. We seek any comments or information that may lead to the discovery of a significant environmental impact from this rule.

List of Subjects in 33 CFR Part 165

Harbors, Marine safety, Navigation (water), Reporting and recordkeeping requirements, Security measures, Waterways.

For the reasons discussed in the preamble, the Coast Guard amends 33 CFR part 165 as follows:

PART 165—REGULATED NAVIGATION AREAS AND LIMITED ACCESS AREAS

■ 1. The authority citation for part 165 continues to read as follows:

Authority: 33 U.S.C. 1231; 46 U.S.C. Chapter 701, 3306, 3703; 50 U.S.C. 191, 195; 33 CFR 1.05–1, 6.04–1, 6.04–6, 160.5; Pub. L. 107–295, 116 Stat. 2064; Department of Homeland Security Delegation No. 0170.1.

■ 2. Add a temporary § 165.T07–0137 to read as follows:

§ 165.T07–0137 Safety Zone; Swim Around Charleston, Charleston, SC.

(a) *Regulated Area.* The following regulated area is a moving safety zone: All waters within a 75-yard radius around Swim Around Charleston participant vessels that are officially associated with the swim. The Swim Around Charleston swimming race consists of a 10-mile course that starts at Remley's Point on the Wando River in approximate position 32°48′49″ N, 79°54′27″ W, crosses the main shipping channel of Charleston Harbor, and finishes at the General William B. Westmoreland Bridge on the Ashley River in approximate position 32°50′14″ N, 80°01′23″ W. All coordinates are North American Datum 1983.

(b) *Definition.* The term ''designated representative'' means Coast Guard Patrol Commanders, including Coast Guard coxswains, petty officers, and other officers operating Coast Guard vessels, and Federal, state, and local officers designated by or assisting the Captain of the Port Charleston in the enforcement of the regulated area.

(c) *Regulations.* (1) All persons and vessels are prohibited from entering, transiting through, anchoring in, or remaining within the regulated area unless authorized by the Captain of the Port Charleston or a designated representative.

(2) Persons and vessels desiring to enter, transit through, anchor in, or remain within the regulated area may contact the Captain of the Port Charleston by telephone at 843–740–7050, or a designated representative via VHF radio on channel 16, to request authorization. If authorization to enter, transit through, anchor in, or remain within the regulated area is granted by the Captain of the Port Charleston or a designated representative, all persons and vessels receiving such authorization must comply with the instructions of the Captain of the Port Charleston or a designated representative.

(3) The Coast Guard will provide notice of the regulated area by Local Notice to Mariners, Broadcast Notice to Mariners, and on-scene designated representatives.

(d) *Effective Date.* This rule is effective from 7 a.m. until 2 p.m. on September 23, 2012.

Dated: August 11, 2012.

M.F. White,

Captain, U.S. Coast Guard, Captain of the Port Charleston.

[FR Doc. 2012–20830 Filed 8–23–12; 8:45 am]

BILLING CODE 9110–04–P

DEPARTMENT OF HOMELAND SECURITY

Coast Guard

33 CFR Part 165

[Docket Number USCG–2012–0385]

RIN 1625–AA00

Safety Zone; Bostock 50th Anniversary Fireworks, Long Island Sound; Manursing Island, NY

AGENCY: Coast Guard, DHS.

ACTION: Final rule.

SUMMARY: The Coast Guard is establishing a temporary safety zone on the navigable waters of Long Island Sound in the vicinity of Manursing Island, NY for a fireworks display. This temporary safety zone is necessary to protect spectators and vessels from the hazards associated with fireworks displays. This rule is intended to restrict all vessels from a portion of Long Island Sound before, during, and immediately after the fireworks event.

DATES: This rule is effective from 9:45 p.m. until 10:50 p.m. on September 8, 2012.

ADDRESSES: Documents mentioned in this preamble are part of docket [USCG–2012–0385]. To view documents mentioned in this preamble as being available in the docket, go to *http://www.regulations.gov*, type the docket number in the ''SEARCH'' box and click ''SEARCH.'' Click on Open Docket Folder on the line associated with this rulemaking. You may also visit the Docket Management Facility in Room W12–140 on the ground floor of the Department of Transportation West Building, 1200 New Jersey Avenue SE., Washington, DC 20590, between 9 a.m. and 5 p.m., Monday through Friday, except Federal holidays.

FOR FURTHER INFORMATION CONTACT: If you have questions on this rule, call or email Ensign Kimberly Farnsworth, Coast Guard; Telephone (718) 354–4163, email *Kimberly.A.Farnsworth@uscg.mil*. If you have questions on viewing or submitting material to the docket, call Renee V. Wright, Program Manager, Docket Operations, telephone (202) 366–9826.

SUPPLEMENTARY INFORMATION:

Table of Acronyms

DHS Department of Homeland Security
FR **Federal Register**
NPRM Notice of Proposed Rulemaking
COTP Captain of the Port

A. Regulatory History and Information

On June 12, 2012, we published a notice of proposed rulemaking (NPRM) entitled Bostock 50th Anniversary Fireworks, Long Island Sound; Manursing Island, NY in the **Federal Register** (77 FR 34894). We received no comments on the proposed rule. No public meeting was requested and none was held.

Under 5 U.S.C. 553(d)(3), the Coast Guard finds that good cause exists for making this rule effective less than 30 days after publication in the **Federal Register**. This event will occur before 30 days have elapsed after the publication of the rule. The event sponsor is unable to postpone this event because the date of this event was chosen based on an anniversary date. In addition, any change to the date of the event would cause economic hardship on the marine event sponsor and negatively impact other activities being held in conjunction with this event.

B. Basis and Purpose

The legal basis for this rule is 33 U.S.C. 1231; 46 U.S.C. Chapter 701, 3306, 3703; 50 U.S.C. 191, 195; 33 CFR 1.05–1, 6.04–1, 6.04–6, 160.5; Public Law 107–295, 116 Stat. 2064; Department of Homeland Security Delegation No. 0170.1.

This temporary safety zone is necessary to ensure the safety of spectators and vessels from hazards associated with the fireworks display. The safety zone will be enforced for 65

minutes, which includes the launch and cool down requirements.

C. Discussion of Comments, Changes and the Final Rule

No comments were received. The Coast Guard did not make any changes in this final rule that were not published in the NPRM.

D. Regulatory Analyses

We developed this rule after considering numerous statutes and executive orders related to rulemaking. Below we summarize our analyses based on 13 of these statutes or executive orders.

1. Regulatory Planning and Review

This rule is not a significant regulatory action under section 3(f) of Executive Order 12866, Regulatory Planning and Review, as supplemented by Executive Order 13563, Improving Regulation and Regulatory Review, and does not require an assessment of potential costs and benefits under section 6(a)(3) of Executive Order 12866 or under section 1 of Executive Order 13563. The Office of Management and Budget has not reviewed it under those Orders.

We expect the economic impact of this rule to be very minimal. Although this regulation may have some impact on the public, the potential impact will be minimized for the following reasons. Vessels will only be restricted from the safety zone for a short duration of time. Before activating the zone, we will notify mariners by appropriate means including but not limited to Local Notice to Mariners and Broadcast Notice to Mariners. Furthermore, vessels may be authorized to transit the zones with permission of the COTP New York or designated representative.

2. Impact on Small Entities

The Regulatory Flexibility Act of 1980 (RFA), 5 U.S.C. 601–612, as amended, requires federal agencies to consider the potential impact of regulations on small entities during rulemaking. The Coast Guard received no comments from the Small Business Administration on this rule. The Coast Guard certifies under 5 U.S.C. 605(b) that this rule will not have a significant economic impact on a substantial number of small entities.

(1) This rule would affect the following entities, some of which might be small entities: The owners or operators of vessels intending to transit or anchor in a portion of Long Island Sound during the effective period.

(2) This safety zone will not have a significant economic impact on a substantial number of small entities for the following reasons. This safety zone will be enforced for only 65 minutes. Vessel traffic can pass safely through the safety zone with permission from the COTP or a designated representative. Before activating the zone, we will notify mariners by appropriate means including but not limited to Local Notice to Mariners and Broadcast Notice to Mariners.

3. Assistance for Small Entities

Under section 213(a) of the Small Business Regulatory Enforcement Fairness Act of 1996 (Pub. L. 104–121), we want to assist small entities in understanding this rule. If the rule would affect your small business, organization, or governmental jurisdiction and you have questions concerning its provisions or options for compliance, please contact the person listed in the **FOR FURTHER INFORMATION CONTACT**, above.

Small businesses may send comments on the actions of Federal employees who enforce, or otherwise determine compliance with, Federal regulations to the Small Business and Agriculture Regulatory Enforcement Ombudsman and the Regional Small Business Regulatory Fairness Boards. The Ombudsman evaluates these actions annually and rates each agency's responsiveness to small business. If you wish to comment on actions by employees of the Coast Guard, call 1–888–REG–FAIR (1–888–734–3247). The Coast Guard will not retaliate against small entities that question or complain about this rule or any policy or action of the Coast Guard.

4. Collection of Information

This rule will not call for a new collection of information under the Paperwork Reduction Act of 1995 (44 U.S.C. 3501–3520).

5. Federalism

A rule has implications for federalism under Executive Order 13132, Federalism, if it has a substantial direct effect on the States, on the relationship between the national government and the States, or on the distribution of power and responsibilities among the various levels of government. We have analyzed this rule under that Order and determined that this rule does not have implications for federalism.

6. Protest Activities

The Coast Guard respects the First Amendment rights of protesters. Protesters are asked to contact the person listed in the **FOR FURTHER INTFORMATION CONTACT** section to coordinate protest activities so that your message can be received without jeopardizing the safety or security of people, places or vessels.

7. Unfunded Mandates Reform Act

The Unfunded Mandates Reform Act of 1995 (2 U.S.C. 1531–1538) requires Federal agencies to assess the effects of their discretionary regulatory actions. In particular, the Act addresses actions that may result in the expenditure by a State, local, or tribal government, in the aggregate, or by the private sector of $100,000,000 (adjusted for inflation) or more in any one year. Though this rule will not result in such an expenditure, we do discuss the effects of this rule elsewhere in this preamble.

8. Taking of Private Property

This rule will not cause a taking of private property or otherwise have taking implications under Executive Order 12630, Governmental Actions and Interference with Constitutionally Protected Property Rights.

9. Civil Justice Reform

This rule meets applicable standards in sections 3(a) and 3(b)(2) of Executive Order 12988, Civil Justice Reform, to minimize litigation, eliminate ambiguity, and reduce burden.

10. Protection of Children

We have analyzed this rule under Executive Order 13045, Protection of Children from Environmental Health Risks and Safety Risks. This rule is not an economically significant rule and does not create an environmental risk to health or risk to safety that may disproportionately affect children.

11. Indian Tribal Governments

This rule does not have tribal implications under Executive Order 13175, Consultation and Coordination with Indian Tribal Governments, because it does not have a substantial direct effect on one or more Indian tribes, on the relationship between the Federal Government and Indian tribes, or on the distribution of power and responsibilities between the Federal Government and Indian tribes.

12. Energy Effects

This action is not a ''significant energy action'' under Executive Order 13211, Actions Concerning Regulations That Significantly Affect Energy Supply, Distribution, or Use.

13. Technical Standards

This rule does not use technical standards. Therefore, we did not consider the use of voluntary consensus standards.

14. Environment

We have analyzed this rule under Department of Homeland Security Management Directive 023–01 and Commandant Instruction M16475.lD, which guide the Coast Guard in complying with the National Environmental Policy Act of 1969 (NEPA) (42 U.S.C. 4321–4370f), and have determined that this action is one of a category of actions that do not individually or cumulatively have a significant effect on the human environment. This rule involves establishing a temporary safety zone. This rule is categorically excluded from further review under paragraph 34(g) of Figure 2–1 of the Commandant Instruction. An environmental analysis checklist supporting this determination and a Categorical Exclusion Determination are available in the docket where indicated under **ADDRESSES**. We seek any comments or information that may lead to the discovery of a significant environmental impact from this rule.

List of Subjects in 33 CFR Part 165

Marine safety, Navigation (water), Reporting and recordkeeping requirements, Waterways.

For the reasons discussed in the preamble, the Coast Guard amends 33 CFR part 165 as follows:

PART 165—REGULATED NAVIGATION AREAS AND LIMITED ACCESS AREA

■ 1. The authority citation for part 165 continues to read as follows:

Authority: 33 U.S.C 1231; 46 U.S.C Chapter 701, 3306, 3703; 50 U.S.C. 191, 195; 33 CFR 1.05–1, 6.04–1, 6.04–6, 160.5; Pub. L. 107–295, 116 Stat. 2064; Department of Homeland Security Delegation No. 0170.1.

■ 2. Add § 165.T01–0385 to read as follows:

§ 165.T01–0385 Safety Zone; Bostock 50th Anniversary Fireworks, Long Island Sound, Manursing Island, NY.

(a) *Regulated Area.* The following area is a temporary safety zone: All navigable waters of the Long Island Sound within a 240-yard radius of the fireworks barge located in approximate position 40°58′01″ N, 073°39′24″ W, in the vicinity of Manursing Island, NY.

(b) *Effective Period.* This rule will be effective from 9:45 p.m. to 10:50 p.m. on September 8, 2012.

(c) *Definitions.* The following definitions apply to this section:

(1) *Designated Representative.* A ''*designated representative*'' is any Coast Guard commissioned, warrant or petty officer of the U.S. Coast Guard who has been designated by the Captain of the Port Sector New York (COTP), to act on his or her behalf. The designated representative may be on an official patrol vessel or may be on shore and will communicate with vessels via VHF–FM radio or loudhailer. In addition, members of the Coast Guard Auxiliary may be present to inform vessel operators of this regulation.

(2) *Official Patrol Vessels.* Official patrol vessels may consist of any Coast Guard, Coast Guard Auxiliary, state, or local law enforcement vessels assigned or approved by the COTP.

(3) *Spectators.* All persons and vessels not registered with the event sponsor as participants or official patrol vessels.

(d) *Regulations.* (1) The general regulations contained in 33 CFR 165.23, as well as the following regulations, apply.

(2) No vessels, except for fireworks barge and accompanying vessels, will be allowed to transit the safety zone without the permission of the COTP.

(3) All persons and vessels shall comply with the instructions of the COTP or the designated representative. Upon being hailed by a U.S. Coast Guard vessel by siren, radio, flashing light or other means, the operator of a vessel shall proceed as directed.

(4) Vessel operators desiring to enter or operate within the regulated area shall contact the COTP or the designated representative via VHF channel 16 or 718–354–4353 (Sector New York command center) to obtain permission to do so.

Dated: August 14, 2012.

G. Loebl,

Captain, U.S. Coast Guard, Captain of the Port New York.

[FR Doc. 2012–20831 Filed 8–23–12; 8:45 am]

BILLING CODE 9110–04–P

DEPARTMENT OF HOMELAND SECURITY

Coast Guard

33 CFR Part 165

[Docket No. USCG–2012–0727]

RIN 1625–AA00

Safety Zone; Apache Pier Labor Day Fireworks; Myrtle Beach, SC

AGENCY: Coast Guard, DHS.

ACTION: Temporary final rule.

SUMMARY: The Coast Guard is establishing a temporary safety zone on the waters of the Atlantic Ocean in the vicinity of Apache Pier in Myrtle Beach, SC, during the Labor Day fireworks demonstration. This regulation is necessary to protect life and property on the navigable waters of the Atlantic Ocean off the coast of Myrtle Beach, SC. Persons and vessels are prohibited from entering, transiting through, anchoring in, or remaining within the safety zone unless authorized by the Captain of the Port Charleston or a designated representative.

DATES: This rule is effective from 9 p.m. on September 1, 2012, until 10:15 p.m. on September 2, 2012. This rule will only be enforced on September 2, 2012, if the event is postponed from September 1, 2012.

ADDRESSES: Documents listed in this preamble are part of docket USCG–2012–0727. To view documents mentioned in this preamble as being available in the docket, go to *http://www.regulations.gov*, type the docket number in the ''SEARCH'' box and click ''SEARCH.'' Click on the Open Docket Folder on the line associated with this rulemaking. You may also visit the Docket Management Facility in Room W12–140 on the ground floor of the Department of Transportation West Building, 1200 New Jersey Avenue SE., Washington, DC 20590, between 9 a.m. and 5 p.m., Monday through Friday, except Federal holidays.

FOR FURTHER INFORMATION CONTACT: If you have questions on this rule, call or email Lieutenant Junior Grade John R. Santorum, Sector Charleston Office of Waterways Management, U.S. Coast Guard; telephone (843) 740–3188, email *John.R.Santorum@uscg.mil.* If you have questions on viewing or submitting material to the docket, call Renee V. Wright, Program Manager, Docket Operations, telephone (202) 366–9826.

SUPPLEMENTARY INFORMATION:

Table of Acronyms

DHS Department of Homeland Security
FR **Federal Register**
NPRM Notice of Proposed Rulemaking

A. Regulatory Information

The Coast Guard is issuing this temporary final rule without prior notice and opportunity to comment pursuant to authority under section 4(a) of the Administrative Procedure Act (APA) (5 U.S.C. 553(b)). This provision authorizes an agency to issue a rule without prior notice and opportunity to comment when the agency for good cause finds that those procedures are ''impracticable, unnecessary, or contrary to the public interest.'' Under 5 U.S.C. 553(b)(B), the Coast Guard finds that good cause exists for not publishing a notice of proposed rulemaking (NPRM) with respect to this rule because the Coast Guard did not receive necessary

information regarding the fireworks displays until July 24, 2012. As a result, the Coast Guard did not have sufficient time to publish an NPRM and to receive public comments prior to the fireworks display. Any delay in the effective date of this rule would be contrary to the public interest because immediate action is needed to minimize potential danger to the public during the fireworks displays.

Under 5 U.S.C. 553(d)(3), the Coast Guard finds that good cause exists for making this rule effective less than 30 days after publication in the **Federal Register** for the reason stated above. The Coast Guard will issue a Local Notice to Mariners and Broadcast Notice to Mariners to advise mariners of the restriction.

B. Basis and Purpose

The legal basis for the rule is the Coast Guard's authority to establish regulated navigation areas and other limited access areas: 33 U.S.C. 1231; 46 U.S.C. Chapter 701, 3306, 3703; 50 U.S.C. 191, 195; 33 CFR 1.05–1, 6.04–1, 6.04–6, 160.5; Public Law 107–295, 116 Stat. 2064; Department of Homeland Security Delegation No. 0170.1.

The purpose of the rule is to protect the public from the hazards associated with the launching of fireworks over navigable waters of the United States.

C. Regulatory Analyses

We developed this rule after considering numerous statutes and executive orders related to rulemaking. Below we summarize our analyses based on 14 of these statutes and executive orders.

1. Regulatory Planning and Review

This rule is not a significant regulatory action under section 3(f) of Executive Order 12866, Regulatory Planning and Review, as supplemented by Executive Order 13563, Improving Regulation and Regulatory Review, and does not require an assessment of potential costs and benefits under section 6(a)(3) of Executive Order 12866 or under Section 1 of Executive Order 13563. The Office of Management and Budget has not reviewed it under those Orders.

The economic impact of this rule is not significant for the following reasons: (1) The safety zone will be enforced for a maximum of 1.25 hours on either September 1 or September 2, 2012; (2) vessel traffic in the area is expected to be minimal during the enforcement period; (3) although persons and vessels will not be able to enter, transit through, anchor in, or remain within the safety zone without authorization from the Captain of the Port Charleston or a designated representative, they may operate in the surrounding area during the enforcement period; (4) persons and vessels may still enter, transit through, anchor in, or remain within the safety zone if authorized by the Captain of the Port Charleston or a designated representative; and (5) the Coast Guard will provide advance notification of the safety zone to the local maritime community by Marine Safety Information Bulletins, Local Notice to Mariners and Broadcast Notice to Mariners.

2. Impact on Small Entities

The Regulatory Flexibility Act of 1980 (RFA), 5 U.S.C. 601–612, as amended, requires federal agencies to consider the potential impact of regulations on small entities during rulemaking. The term ''small entities'' comprises small businesses, not-for-profit organizations that are independently owned and operated and are not dominant in their fields, and governmental jurisdictions with populations of less than 50,000. The Coast Guard certifies under 5 U.S.C. 605(b) that this rule will not have a significant economic impact on a substantial number of small entities.

(1) This rule would affect the following entities, some of which might be small entities: The owners or operators of vessels intending to transit or anchor within the safety zone from 9 p.m. to 10:15 p.m. on September 1, 2012.

(2) For the reasons discussed in the Regulatory Planning and Review section above, this rule will not have a significant economic impact on a substantial number of small entities.

3. Assistance for Small Entities

Under section 213(a) of the Small Business Regulatory Enforcement Fairness Act of 1996 (Pub. L. 104–121), we want to assist small entities in understanding this rule. If the rule would affect your small business, organization, or governmental jurisdiction and you have questions concerning its provisions or options for compliance, please contact the person listed in the **FOR FURTHER INFORMATION CONTACT**, above.

Small businesses may send comments on the actions of Federal employees who enforce, or otherwise determine compliance with, Federal regulations to the Small Business and Agriculture Regulatory Enforcement Ombudsman and the Regional Small Business Regulatory Fairness Boards. The Ombudsman evaluates these actions annually and rates each agency's responsiveness to small business. If you wish to comment on actions by employees of the Coast Guard, call 1–888–REG–FAIR (1–888–734–3247). The Coast Guard will not retaliate against small entities that question or complain about this rule or any policy or action of the Coast Guard.

4. Collection of Information

This rule will not call for a new collection of information under the Paperwork Reduction Act of 1995 (44 U.S.C. 3501–3520).

5. Federalism

A rule has implications for federalism under Executive Order 13132, Federalism, if it has a substantial direct effect on the States, on the relationship between the national government and the States, or on the distribution of power and responsibilities among the various levels of government. We have analyzed this rule under that Order and have determined that it does not have implications for federalism.

6. Protest Activities

The Coast Guard respects the First Amendment rights of protesters. Protesters are asked to contact the person listed in the **FOR FURTHER INFORMATION CONTACT** section to coordinate protest activities so that your message can be received without jeopardizing the safety or security of people, places or vessels.

7. Unfunded Mandates Reform Act

The Unfunded Mandates Reform Act of 1995 (2 U.S.C. 1531–1538) requires Federal agencies to assess the effects of their discretionary regulatory actions. In particular, the Act addresses actions that may result in the expenditure by a State, local, or tribal government, in the aggregate, or by the private sector of $100,000,000 (adjusted for inflation) or more in any one year. Though this rule will not result in such an expenditure, we do discuss the effects of this rule elsewhere in this preamble.

8. Taking of Private Property

This rule will not cause a taking of private property or otherwise have taking implications under Executive Order 12630, Governmental Actions and Interference with Constitutionally Protected Property Rights.

9. Civil Justice Reform

This rule meets applicable standards in sections 3(a) and 3(b)(2) of Executive Order 12988, Civil Justice Reform, to minimize litigation, eliminate ambiguity, and reduce burden.

10. Protection of Children

We have analyzed this rule under Executive Order 13045, Protection of Children from Environmental Health Risks and Safety Risks. This rule is not an economically significant rule and does not create an environmental risk to health or risk to safety that may disproportionately affect children.

11. Indian Tribal Governments

This rule does not have tribal implications under Executive Order 13175, Consultation and Coordination with Indian Tribal Governments, because it does not have a substantial direct effect on one or more Indian tribes, on the relationship between the Federal Government and Indian tribes, or on the distribution of power and responsibilities between the Federal Government and Indian tribes.

12. Energy Effects

This action is not a ''significant energy action'' under Executive Order 13211, Actions Concerning Regulations That Significantly Affect Energy Supply, Distribution, or Use.

13. Technical Standards

This rule does not use technical standards. Therefore, we did not consider the use of voluntary consensus standards.

14. Environment

We have analyzed this rule under Department of Homeland Security Management Directive 023–01 and Commandant Instruction M16475.lD, which guide the Coast Guard in complying with the National Environmental Policy Act of 1969 (NEPA) (42 U.S.C. 4321–4370f), and have determined that this action is one of a category of actions that do not individually or cumulatively have a significant effect on the human environment. This rule involves establishing a temporary safety zone that will be enforced for no more than 1.25 hours. This rule is categorically excluded from further review under paragraph 34(g) of Figure 2–1 of the Commandant Instruction. An environmental analysis checklist supporting this determination and a Categorical Exclusion Determination are available in the docket where indicated under **ADDRESSES**. We seek any comments or information that may lead to the discovery of a significant environmental impact from this rule.

List of Subjects in 33 CFR Part 165

Harbors, Marine safety, Navigation (water), Reporting and recordkeeping requirements, Security measures, Waterways.

For the reasons discussed in the preamble, the Coast Guard amends 33 CFR part 165 as follows:

PART 165—REGULATED NAVIGATION AREAS AND LIMITED ACCESS AREAS

■ 1. The authority citation for part 165 continues to read as follows:

Authority: 33 U.S.C. 1231; 46 U.S.C. Chapter 701, 3306, 3703; 50 U.S.C. 191, 195; 33 CFR 1.05–1, 6.04–1, 6.04–6, 160.5; Pub. L. 107–295, 116 Stat. 2064; Department of Homeland Security Delegation No. 0170.1.

■ 2. Add a temporary § 165.T07–0727 to read as follows:

§ 165.T07–0727 Safety Zone; Apache Pier, Myrtle Beach, SC.

(a) *Regulated Area.* The Coast Guard is establishing a temporary safety zone with a 1000 foot radius around Apache Pier, Myrtle Beach, SC in approximate position 33°45′41.26″ N, 078°46′47.52″ W. All coordinates are North American Datum 1983.

(b) *Definition.* The term ''designated representative'' means Coast Guard Patrol Commanders, including Coast Guard coxswains, petty officers, and other officers operating Coast Guard vessels, and Federal, state, and local officers designated by or assisting the Captain of the Port Charleston in the enforcement of the regulated areas.

(c) *Regulations.* (1) All persons and vessels are prohibited from entering, transiting through, anchoring in, or remaining within the regulated area unless authorized by the Captain of the Port Charleston or a designated representative.

(2) Persons and vessels desiring to enter, transit through, anchor in, or remain within the regulated area may contact the Captain of the Charleston by telephone at 843–740–7050, or a designated representative via VHF radio on channel 16, to request authorization. If authorization to enter, transit through, anchor in, or remain within the regulated area is granted by the Captain of the Port Charleston or a designated representative, all persons and vessels receiving such authorization must comply with the instructions of the Captain of the Port Charleston or a designated representative.

(3) The Coast Guard will provide notice of the regulated area by Marine Safety Information Bulletins, Local Notice to Mariners, Broadcast Notice to Mariners, and on-scene designated representatives.

(d) *Effective Date.* This rule is effective from 9 p.m. on September 1, 2012, until 10:15 p.m. on September 2, 2012. This rule will only be enforced on September 2, 2012, if the event is postponed from September 1, 2012.

Dated: August 12, 2012.

M.F. White,

Captain, U.S. Coast Guard, Captain of the Port Charleston.

[FR Doc. 2012–20832 Filed 8–23–12; 8:45 am]

BILLING CODE 9110–04–P

ENVIRONMENTAL PROTECTION AGENCY

40 CFR Part 98

[EPA–HQ–OAR–2011–0147; FRL–9714–3]

RIN 2060–AR53

2012 Technical Corrections, Clarifying and Other Amendments to the Greenhouse Gas Reporting Rule, and Confidentiality Determinations for Certain Data Elements of the Fluorinated Gas Source Category

AGENCY: Environmental Protection Agency (EPA).

ACTION: Final rule.

SUMMARY: The EPA is amending specific provisions of the Greenhouse Gas Reporting Rule to provide greater clarity and flexibility to facilities subject to reporting emissions from the industrial waste landfill, petroleum and natural gas systems, fluorinated gas production, and electronics manufacturing source categories. These source categories will report greenhouse gas data for the first time in September 2012. The changes do not significantly change the overall calculation and monitoring requirements of the Greenhouse Gas Reporting Rule or add additional requirements for reporters. The EPA is also making confidentiality determinations for four new data elements for the fluorinated gas production source category of the Greenhouse Gas Reporting Rule. Lastly, we are finalizing an amendment to the general provisions to defer the reporting deadline for a data element used as an input to an emission equation in the fluorinated gas production source category until 2015.

DATES: This final rule is effective on August 24, 2012, except for the amendments to 40 CFR 98.3(c)(4) and the confidentiality determinations for subpart L described in section II.D of the Supplementary Information, which are effective on September 24, 2012.

ADDRESSES: The EPA has established a docket for this action under Docket ID No. EPA–HQ–OAR–2011–0147. All documents in the docket are listed in

the *http://www.regulations.gov* index. Although listed in the index, some information is not publicly available, e.g., CBI or other information whose disclosure is restricted by statute. Certain other material, such as copyrighted material, is not placed on the Internet and is publicly available only in hard copy. Publicly available docket materials are available either electronically in *http://www.regulations.gov* or in hard copy at the Air Docket, EPA/DC, EPA West Building, Room 3334, 1301 Constitution Ave. NW., Washington, DC. This Docket Facility is open from 8:30 a.m. to 4:30 p.m., Monday through Friday, excluding legal holidays. The telephone number for the Public Reading Room is (202) 566–1744, and the telephone number for the Air Docket is (202) 566–1742.

FOR FURTHER INFORMATION CONTACT: Carole Cook, Climate Change Division, Office of Atmospheric Programs (MC–6207J), Environmental Protection Agency, 1200 Pennsylvania Ave. NW., Washington, DC 20460; telephone number: (202) 343–9263; fax number: (202) 343–2342; email address: *GHGReportingRule@epa.gov.* For technical information and implementation materials, please go to the Greenhouse Gas Reporting Rule Program Web site at *http://www.epa.gov/climatechange/emissions/ghgrulemaking.html.* To submit a question, select Rule Help Center, followed by ''Contact Us.''

Worldwide Web (WWW). In addition to being available in the docket, an electronic copy of this final rule will also be available through the WWW. Following the Administrator's signature, a copy of this action will be posted on the EPA's Greenhouse Gas Reporting Program Web site at *http://www.epa.gov/climatechange/emissions/ghgrulemaking.html.*

SUPPLEMENTARY INFORMATION:

Regulated Entities. The Administrator determined that this action is subject to the provisions of Clean Air Act (CAA) section 307(d). See CAA section 307(d)(1)(V) (the provisions of section 307(d) apply to ''such other actions as the Administrator may determine''). These amended regulations could affect owners or operators of direct emitters of GHGs. Regulated categories and affected entities may include those listed in Table 1 of this preamble:

TABLE 1—EXAMPLES OF AFFECTED ENTITIES BY CATEGORY

Category	NAICS	Examples of affected facilities
Petroleum and Natural Gas Systems	486210	Pipeline transportation of natural gas.
	221210	Natural gas distribution facilities.
	211	Extractors of crude petroleum and natural gas.
	211112	Natural gas liquid extraction facilities.
Electronics Manufacturing	334111	Microcomputers manufacturing facilities.
	334413	Semiconductor, photovoltaic (solid-state) device manufacturing facilities.
	334419	LCD unit screens manufacturing facilities.
	334419	MEMS manufacturing facilities.
Fluorinated Gas Production	325120	Industrial gases manufacturing facilities.
Industrial Waste Landfills	562212	Solid waste landfills.
	322110	Pulp mills.
	322121	Paper mills.
	322122	Newsprint mills.
	322130	Paperboard mills.
	311611	Meat processing facilities.
	311411	Frozen fruit, juice, and vegetable manufacturing facilities.
	311421	Fruit and vegetable canning facilities.
	221320	Sewage treatment facilities.

Table 1 of this preamble is not intended to be exhaustive, but rather lists the types of facilities that the EPA is now aware could be potentially affected by the reporting requirements. Other types of facilities not listed in the table could also be affected. To determine whether you are affected by this action, you should carefully examine the applicability criteria found in 40 CFR part 98, subpart A or the relevant criteria in the sections related to direct emitters of GHGs. If you have questions regarding the applicability of this action to a particular facility, consult the person listed in the preceding **FOR FURTHER INFORMATION CONTACT** section.

What is the effective date? This final rule is effective on August 24, 2012, except for the amendments to 40 CFR 98.3(c)(4) (the subpart A amendments that affect subpart I) and the confidentiality determinations for subpart L, which are effective on September 24, 2012. Section 553(d) of the Administrative Procedure Act (APA), 5 U.S.C. Chapter 5, generally provides that rules may not take effect earlier than 30 days after they are published in the **Federal Register**. EPA is issuing this final rule under section 307(d)(1) of the Clean Air Act, which states: ''The provisions of section 553 through 557 * * * of Title 5 shall not, except as expressly provided in this section, apply to actions to which this subsection applies.'' Thus, section 553(d) of the APA does not apply to this rule. EPA is nevertheless acting consistently with the purposes underlying APA section 553(d) in making the final rule provisions, except for the amendments to 40 CFR 98.3(c)(4) (the subpart A amendments that affect subpart I) and the subpart L confidentiality determinations, effective on August 24, 2012. This final rule, except for the amendments to 40 CFR 98.3(c)(4) (the subpart A amendments that affect subpart I) and the subpart L confidentiality determinations, temporarily requires less detailed reporting under subpart L than would otherwise have been required by the November 2010 Subpart L final rule (75 FR 74774), defers the deadline for reporting a data element used as an input to emission equations under subpart L, removes a data reporting requirement and otherwise provides flexibilities under subpart W, and removes the requirement for some facilities to report under subpart TT. A shorter effective date in such circumstances is consistent with the purposes of APA section 553(d), which provides an exception for any action that grants or recognizes an exemption or relieves a restriction.

Judicial Review. Under section 307(b)(1) of the CAA, judicial review of

this final rule is available only by filing a petition for review in the U.S. Court of Appeals for the District of Columbia Circuit (the Court) by October 23, 2012. Under CAA section 307(d)(7)(B), only an objection to this final rule that was raised with reasonable specificity during the period for public comment can be raised during judicial review. Section 307(d)(7)(B) of the CAA also provides a mechanism for the EPA to convene a proceeding for reconsideration, ''[i]f the person raising an objection can demonstrate to EPA that it was impracticable to raise such objection within [the period for public comment] or if the grounds for such objection arose after the period for public comment (but within the time specified for judicial review) and if such objection is of central relevance to the outcome of the rule.'' Any person seeking to make such a demonstration to us should submit a Petition for Reconsideration to the Office of the Administrator, Environmental Protection Agency, Room 3000, Ariel Rios Building, 1200 Pennsylvania Ave., NW., Washington, DC 20460, with a copy to the person listed in the preceding **FOR FURTHER INFORMATION CONTACT** section, and the Associate General Counsel for the Air and Radiation Law Office, Office of General Counsel (Mail Code 2344A), Environmental Protection Agency, 1200 Pennsylvania Ave. NW., Washington, DC 20004. Note, under CAA section 307(b)(2), the requirements established by this final rule may not be challenged separately in any civil or criminal proceedings brought by the EPA to enforce these requirements.

Acronyms and Abbreviations. The following acronyms and abbreviations are used in this document.

CAA Clean Air Act
CBI confidential business information
CFR Code of Federal Regulations
CH_4 methane
CO_2 carbon dioxide
DOC degradable organic carbon
EF emission factor
EPA U.S. Environmental Protection Agency
FR **Federal Register**
GHG greenhouse gas
GHGRP Greenhouse Gas Reporting Program
kg/ft^3 kilograms per cubic foot
CO_2e carbon dioxide equivalent
N_2O nitrous oxide
NAICS North American Industry Classification System
NTTAA National Technology Transfer and Advancement Act
OMB Office of Management and Budget
psia pounds per square inch absolute
QSARs quantitative structure activity relationships
RFA Regulatory Flexibility Act
SF_6 sulfur hexafluoride
U.S. United States
UMRA Unfunded Mandates Reform Act of 1995

Organization of This Document. The following outline is provided to aid in locating information in this preamble.

I. Background
A. Organization of This Preamble
B. Background on the Final Rule
C. Legal Authority
D. How do these amendments apply to 2012 reports?
E. How do these amendments affect confidentiality determinations?
II. Final Amendments and Responses to Public Comments
A. Subpart A—General Provisions
B. Subpart TT—Industrial Waste Landfills
C. Subpart W—Petroleum and Natural Gas Systems
D. Subpart L—Fluorinated Gas Production
III. Statutory and Executive Order Reviews
A. Executive Order 12866: Regulatory Planning and Review and Executive Order 13563: Improving Regulation and Regulatory Review
B. Paperwork Reduction Act
C. Regulatory Flexibility Act (RFA)
D. Unfunded Mandates Reform Act (UMRA)
E. Executive Order 13132: Federalism
F. Executive Order 13175: Consultation and Coordination With Indian Tribal Governments
G. Executive Order 13045: Protection of Children From Environmental Health Risks and Safety Risks
H. Executive Order 13211: Actions That Significantly Affect Energy Supply, Distribution, or Use
I. National Technology Transfer and Advancement Act
J. Executive Order 12898: Federal Actions To Address Environmental Justice in Minority Populations and Low-Income Populations
K. Congressional Review Act

I. Background

A. Organization of This Preamble

This preamble consists of three sections. The first section provides background on 40 CFR part 98 and describes the purpose and legal authority for this action.

The second section of this preamble summarizes the revisions made to the specific requirements for the general provisions (subpart A), industrial waste landfills (subpart TT), petroleum and natural gas systems (subpart W) and fluorinated gas production (subpart L) of 40 CFR part 98. It also describes the major changes made to these source categories since proposal and provides a brief summary of significant public comments and EPA's responses on issues specific to each source category. Additional responses to significant comments can be found in the document ''2012 Technical Corrections, Clarifying and Other Amendments to the Greenhouse Gas Reporting Rule, and Confidentiality Determinations for Certain Data Elements of the Fluorinated Gas Source Category—Responses to Public Comment'' in the docket to this rulemaking.

The third section of this preamble discusses the various statutory and executive order requirements applicable to this rulemaking.

B. Background on the Final Rule

This action finalizes amendments to provisions in 40 CFR part 98, subparts A, TT, W, and L. The 2009 final GHG Reporting Rule was published in the **Federal Register** on October 30, 2009 (74 FR 56260, hereafter referred to as the ''2009 final rule'' or ''Part 98''). The 2009 final rule, which finalized reporting requirements for 30 source categories, did not include subparts TT, W, and L. Subsequent notices were published in 2010 finalizing the requirements for subpart TT (75 FR 39736, July 12, 2010), subpart W (75 FR 74458, November 30, 2010), and subpart L (75 FR 74774, December 1, 2010). Following the promulgation of these subparts, the EPA finalized four technical corrections and clarifying amendments to these and other subparts under the Greenhouse Gas Reporting Program (GHGRP).[1]

In a separate recent action, the EPA proposed corrections, clarifying, and other amendments to subparts A, TT, W, and L on May 21, 2012 (77 FR 29935), hereinafter ''2012 Technical Corrections Proposal.'' In that action, the EPA proposed several amendments to specific provisions in these subparts to provide greater clarity and flexibility to facilities subject to reporting in 2012. The EPA also proposed an amendment to Table A–7 of subpart A to add a subpart L data element that was inadvertently omitted in the final deferral rule[2] to defer its reporting deadline until 2015. In this action, the EPA is finalizing amendments to provisions in subparts A, TT, W, and L.

On January 10, 2012 (77 FR 1434), the EPA proposed confidentiality determinations for data elements (excluding those used as inputs to emission equations) in eight subparts of Part 98, including subpart L. In the 2012 Technical Corrections Proposal, the EPA proposed, among other things, four new data elements for subpart L and confidentiality status for those four new subpart L data elements. In this action, the EPA is finalizing the addition of four

[1] 75 FR 66434, October 28, 2010; 75 FR 79092, December 17, 2010; 76 FR 73866, November 29, 2011; 76 FR 80554, December 23, 2011.

[2] 76 FR 53057, August 25, 2011.

new data elements to subpart L and their confidentiality determinations.

C. Legal Authority

The EPA is promulgating these rule amendments under its existing CAA authority, specifically authorities provided in CAA section 114. As stated in the preamble to the 2009 final rule (74 FR 56260, October 30, 2009) and the Response to Comments on the April 10, 2009 initial proposed rule,[3] Volume 9, Legal Issues, CAA section 114 provides the EPA broad authority to require the information proposed to be gathered by this rule because such data would inform and are relevant to the EPA's carrying out a wide variety of CAA provisions. As discussed in the preamble to the initial proposed rule (74 FR 16448, April 10, 2009), CAA section 114(a)(1) authorizes the Administrator to require emissions sources, persons subject to the CAA, manufacturers of control or process equipment, or persons who the Administrator believes may have necessary information to monitor and report emissions and provide such other information the Administrator requests for the purposes of carrying out any provision of the CAA. For further information about the EPA's legal authority, see the preambles to the 2009 proposed and final rules and EPA's Response to Comments, Volume 9.

In addition, the EPA is making confidentiality determinations for four data elements in subpart L, under its authorities provided in sections 114, 301, and 307 of the CAA. As mentioned above, CAA section 114 provides the EPA authority to obtain the information in Part 98, including the four new data elements we have added to subpart L. Section 114(c) requires that the EPA make information obtained under section 114 publicly available, except where information qualifies for confidential treatment. Section 114(c) excludes emission data from qualifying for confidential treatment. The Administrator has determined that this action (amendment and confidentiality determination) is subject to the provisions of section 307(d) of the CAA.

D. How do these amendments apply to 2012 reports?

As explained in the preamble to the 2012 Technical Corrections Proposal, our response to comments, and this notice, we believe that it is feasible for reporters to implement the changes for the 2011 reporting year, for which reports are due by September 28, 2012. The revisions that apply to the reporting for 2011 are primarily technical corrections, and provide clarification regarding the existing regulatory requirements or reduce the amount of information that is required to be reported.

In the case of 40 CFR part 98, subpart A, the amendment is merely a harmonizing change to a technical correction finalized in February 2012 for subpart I (see 77 FR 10373). This change is effective for reporting year 2012 and does not affect reporting year 2011. The February 2012 subpart I technical correction required reporters to calculate emissions of certain additional fluorinated heat transfer fluids under subpart I; however, the February 2012 correction inadvertently omitted an amendment to a corresponding requirement in subpart A to include those calculated emissions in the annual GHG report. This action corrects this omission by requiring that reporters include these emissions from heat transfer fluids in their facility level totals reported to the EPA in the annual GHG report. Additionally, as proposed, this rule adds one data element to Table A–7 to Subpart A (Table A–7 lists data elements whose reporting deadline is deferred until 2015). This element was inadvertently omitted in the final deferral rule defers the reporting of one additional input until 2015. Because this reduces the reporting requirements, the EPA has determined that it is feasible for this amendment to apply to the reporting year 2011; therefore this data element would not need to be reported until 2015.

In the case of 40 CFR part 98, subpart TT, this final rule excludes some facilities from the reporting requirements and reduces the burden by making it easier for facilities to determine applicability of subpart TT under the GHG Reporting Rule. The excluded facilities are not expected to emit GHGs since they receive only inert wastes that do not generate methane.

In the case of 40 CFR part 98, subpart W, the amendments include technical corrections that, while important to allow reporters to calculate emissions accurately, do not materially affect the actions facilities must take to comply with the rule. For example, in this action the EPA has corrected the emission factors in Table W–1A of subpart W for the onshore petroleum and natural gas production segment, due to an error in the December 23, 2011 Technical Revisions to the Petroleum and Natural Gas Systems Category of the Greenhouse Gas Reporting Rule (76 FR 80554, December 23, 2011, referred to hereinafter as the ''December 2011 technical corrections final rule''), where EPA incorrectly revised several of the emission factors in this table. This final rule corrects this error but does not materially affect the actions a facility must undertake to comply with subpart W.

In the case of 40 CFR part 98, subpart L, facilities subject to subpart L will report greenhouse gas emissions in a more aggregated manner in 2012 and 2013. This amendment is temporary (i.e., for 2012 and 2013 only) to allow the EPA time to fully evaluate concerns recently raised by stakeholders regarding reporting, and subsequent EPA release, of certain emission data.

As explained above, we have concluded that it is appropriate to have these amendments to subpart A, Table A–7 and subparts TT and W apply to the 2011 reporting year, for which reporting occurs on September 28, 2012. For additional background information regarding some of these amendments, please refer to the Technical Support Document for the 2012 Technical Corrections, Clarifying and Other Amendments to Certain Provisions of the Greenhouse Gas Reporting Rule proposal, available in the docket for this rulemaking (EPA–HQ–OAR–2011–0147–0041).

E. How do these amendments affect confidentiality determinations?

The amendments in this action do not affect the confidentiality determinations for subpart A data elements finalized in the ''Confidentiality Determinations for Data Required Under the Mandatory Greenhouse Gas Reporting Rule and Amendments to Special Rules Governing Certain Information Obtained Under the Clean Air Act,'' [4] (hereinafter referred to as the ''2011 Final CBI rule'') or the proposed determinations for subparts W,[5] L,[6] and TT.[7] In this notice, we are also finalizing confidentiality determinations for the four new subpart L data elements also added in this rule. The confidentiality determinations for these new data elements together with

[3] See *http://www.epa.gov/climatechange/emissions/responses.html.*

[4] See 75 FR 30782, May 26, 2011.

[5] See 77 FR 11039, February 24, 2012.

[6] See 77 FR 1434, January 10, 2012.

[7] See 75 FR 30782, May 26, 2011 for final confidentiality determination for subpart TT. See 77 FR 1434, January 10, 2012 for proposed confidentiality determinations for new subpart TT data elements added by the December 2011 technical corrections final rule subsequent to the final confidentiality determinations made in 75 FR 30782. For the final determinations for the new subpart TT data elements, see the recently signed action titled *Final Confidentiality Determinations For Nine Subparts and Amendments to Subparts A and I Under the Mandatory Reporting of Greenhouse Gases Rule.*

our rationale are discussed in Section II.D.1 of this preamble.

This rule does not include confidentiality determinations for subparts A, W, and TT. For the subpart A amendments, we are not making any confidentiality determinations because the data element being added is a subset of another data element in subpart I for which we have already proposed a CBI determination. Additionally, we are not making any confidentiality determination at this time for the subpart L data element added to Table A–7 of subpart A to defer the deadline for reporting until 2015. For subpart W, in addition to deleting an existing data element, the amendments in this action make only minor clarifications to the existing reporting requirements in that subpart, which do not change the type of data to be reported. Therefore, there is no change to the proposed confidentiality determinations for the data elements in that subpart. There are no amendments to the reporting requirements for subpart TT.

II. Final Amendments and Responses to Public Comments

In this action, the EPA is amending several provisions in subparts A, TT, W, and L of 40 CFR part 98 to provide greater clarity and flexibility. The amendments are listed in this section by subpart, followed by a more detailed summary of the final amendments to the various provisions and the EPA's responses to major comments submitted on those amendments. We indicate where an amendment is being finalized as proposed and where an amendment differs from that which was proposed in the 2012 Technical Corrections Proposal. For additional comments and EPA's response to those comments please see the comment response document available in Docket ID No. EPA–HQ–OAR–2011–0147.

A. Subpart A—General Provisions

1. Summary of Final Amendments

As proposed, this action amends the general reporting requirements of 40 CFR 98.3(c)(4) of subpart A, which specifies the types of data and format for reporting emissions in the annual GHG reports (e.g., annual emissions from each source category by GHG). In addition to the proposed amendments to 98.3(c)(4), EPA has included one additional edit to 40 CFR 98.3(c)(4) that did not appear in the proposal. This additional amendment adds the text ''and each fluorinated heat transfer fluid (as defined in § 98.98)'' to the introductory sentence of 40 CFR 98.3(c)(4). Although this edit was not proposed in the 2012 Technical Corrections Proposal, it is being added as a clarifying change to the regulatory language. EPA has determined that this additional edit does not substantively change the amendments that were proposed and is administrative in nature. The amendment to subpart A that was proposed in the 2012 Technical Corrections proposal specifies that facilities subject to subpart I must include all fluorinated HTFs listed in Table A–1 of subpart A in the computation of CO_2e that is required by 40 CFR 98.3(c)(4)(i). Specifically, facilities must report each fluorinated HTF that is also a fluorinated GHG under 40 CFR 98.3(c)(4)(iii)(E) and each fluorinated HTF that is not a fluorinated GHG in the new data element, 40 CFR 98.3(c)(4)(iii)(F). This change, effective for reporting year 2012, conforms with the amendments to reporting requirements for heat transfer fluids (fluorinated HTFs) that were published on February 22, 2012 (77 FR 10373). This change simplifies reporting for facilities and reduces burden by amending subpart A to be consistent with the requirements in subpart I. Given that facilities are already required to calculate emissions of fluorinated HTFs under subpart I, reporters already have the necessary data to comply with the final rule amendments.

As proposed in the 2012 Technical Corrections Proposal, we are also amending Table A–7 to subpart A to add a subpart L data element used as an input to an emission equation (Equation L–6) that was inadvertently omitted in the final deferral rule. Table A–7 to subpart A lists the inputs to emission equations whose reporting deadlines have been deferred until March 31, 2015. Table A–7 to subpart A is amended to include the data element, ''the mass of each fluorine-containing product produced by the process'' (40 CFR 98.126(b)(7)); as is already the case with all other subpart L data elements assigned to the inputs to equations data category, this change defers the reporting deadline for this data element until March 31, 2015.

2. Summary of Comments and Responses

We received no comments on the proposed amendments to subpart A.

B. Subpart TT—Industrial Waste Landfills

1. Summary of Final Amendments

As proposed, we are amending subpart TT to exempt industrial waste landfills that receive only inert materials from reporting under this subpart. As discussed in the preamble to the proposed rule (77 FR 29935, May 21, 2012), this amendment ensures that landfills that are not expected to emit GHGs are excluded from reporting under this subpart. Specifically, we are adding, as proposed, a degradable organic content (DOC) value exclusion (provided in weight percent on a wet basis) as 40 CFR 98.460(c)(2)(xiii).

2. Summary of Comments and Responses

We received two comments on the proposed amendment to subpart TT. Both comments supported EPA's proposed amendments.

This section contains a brief summary of one of the comments received on the proposed changes to subpart TT and our response. Additional comments and responses thereto can be found in the document, ''Response to Comments: 2012 Technical Corrections, Clarifying and Other Amendments of the Mandatory Reporting of Greenhouse Gases Rule, and Confidentiality Determinations for Certain Data Elements of the Fluorinated Gas Source Category'' (see EPA–HQ–OAR–2011–0147).

Comment: One commenter requested clarification on the number of test results from the use of the anaerobic biodegradation test that are required to determine whether or not a facility meets the definition of the source category under this subpart.

Response: One representative sample must be taken and tested using an anaerobic biodegradation test in order to determine if a waste stream is inert and therefore the landfill is exempted from reporting under 40 CFR 98.460(c)(2)(xiii). This is consistent with the number of samples required for determining an exemption using the volatile solids concentration under 40 CFR 98.460(c)(2)(xii). The EPA agrees that a clarification is needed because Part 98 currently does not specify the number of samples necessary to determine whether the exemption applies. Therefore, we have added text to 40 CFR 98.464(b) to provide this clarification. The EPA notes that while only one representative sample must be taken from each waste stream to be tested, the anaerobic biodegradation test must be performed according to the steps described in 40 CFR 98.464(b)(i), which requires multiple waste samples to be tested. Therefore, if only one representative sample is taken from a waste stream, the sample taken must be of sufficient size to be subdivided and tested according to the requirements in 40 CFR 98.464(b)(i).

C. Subpart W—Petroleum and Natural Gas Systems

1. Summary of Final Amendments

The EPA is finalizing several technical corrections and amendments to subpart W as proposed in the 2012 Technical Corrections Proposal to correct equations and otherwise clarify provisions in the rule to ensure consistency across the calculation, monitoring, and reporting requirements in subpart W and thereby facilitate reporting. The EPA is finalizing the following technical corrections and amendments as proposed:

- Removing a factor of 1,000 from the denominator of Equation W–6 in 40 CFR 98.233(e)(5) so that the emissions are calculated in standard cubic feet rather than thousand standard cubic feet.
- Providing reporters with the option to take and use more than the prescribed number of sample measurements per unique well tubing diameter and pressure group combination per sub-basin.
- Changing the parameter ''FRp'' to ''FR'' in Equation W–7 in 40 CFR 98.233(f)(1) to avoid confusion.
- Amending the parameter ''Tp'' and its definition in Equation W–7 to clarify that it refers to the cumulative amount of time in hours of venting for each well as opposed to the time for the measured well(s).
- Revising the definition of parameter ''SPp'' in Equation W–8 in 40 CFR 98.233(f)(2) to clarify that the reporter must take a ratio of casing to tubing pressure.
- Updating Equation W–8 and also Equation W–9 in 40 CFR 98.233(f)(2) and (f)(3) by replacing the subscript ''q'' with ''p'' in parameter ''SFR'' to match the definition of parameter ''SFRp.''
- Clarifying that the terms ''Vp'' and ''HRp,q'' in Equations W–8 and W–9 are to be monitored per unloading event.
- Clarifying that Calculation Methodology 3 applies to well venting, not ''each'' well venting and that parameter ''W'' in Equation W–9 is the total number of wells with plunger lift assist.
- Revising the term ''backflow'' to read ''flowback'' in 40 CFR 98.233(g) and (g)(1).
- Adding subscript ''s'' to several parameters in Equations W–10A and W–10B to clarify that these parameters are at standard conditions.
- Clarifying that the flow volume variable ''FVs,p'' in Equation W–10B is at standard cubic feet.
- Clarifying that the outputs of Equations W–11A and W–11B are at actual conditions by inserting the word ''actual'' in the definition of flow rate, ''FR,'' and also adding a subscript ''a'' to denote inputs at actual conditions.
- Adding a reference to Equation W–12 in 40 CFR 98.233(g)(1)(iii) in the parameter definition ''FRs,p'' to convert ''FRa'' to standard conditions.
- In Equations W–11A and W–11B, clarifying the definition of orifice cross sectional area, ''A'' to state ''Cross sectional open area of the restriction orifice (m^2).'' (Adding the terms ''open'' and ''the restriction.'')
- Providing reporters with the option to take and use more than the prescribed number of sample measurements per sub-basin and well type (horizontal or vertical).
- Amending Equation W–13 to clarify that the output is a sum of emissions from all completions and workovers without hydraulic fracturing within a sub-basin.
- Revising parameter ''Es,n'' in the parameter description to match the letter case of the term in Equation W–14B, revising the term ''Ta'' to ''Ta,p'' in Equation W–14B, and clarifying that the temperature is for each blowdown ''p.''
- Revising 40 CFR 98.233(j)(5) to clarify that the term ''throughput'' refers to ''average daily throughput of oil.''
- Revising the definition of ''Count'' in Equation W–15 of 40 CFR 98.233(j)(5) to clarify that the reporters are to count only the separators or wells that feed oil directly to the storage tank.
- Revising the parameter definition of ''1000'' to accurately describe the conversion occurring through this parameter.
- Revising the definition of ''PR'' in Equation W–17B of 40 CFR 98.233(l)(3) to clarify that the production rate is in actual and not standard conditions.
- Removing and reserving 40 CFR 98.233(n)(7) to harmonize the language with the reporting requirements in 40 CFR 98.236.
- Providing the proper notation for the summations in Equations W–23, W–24, W–27, and W–28 so that owners and operators may correctly calculate GHG emissions from centrifugal and reciprocating compressors.
- Amending 40 CFR 98.233(o)(7) to remove the word ''thousand'' in parameter ''EF_i'' in Equation W–25.
- Revising the definition of parameter EFi in Equation W–25 in 40 CFR 98.233(o)(7) by deleting the term ''thousand.''
- Amending an incorrect reference in 40 CFR 98.233(r)(2) to ''Table W–1A'' instead of ''Table 1–A.''
- Revising the phrase ''meter or regulator'' in 40 CFR 98.233(r)(6)(ii) and replacing it with ''meter/regulator.''
- Revising 40 CFR 98.233(t) to clarify that reporters do not need to alter their calculation results to standard conditions if the results already reflect standard conditions.
- Revising the definition of parameter ''ρi'' in Equation W–36 to amend the density value of CH_4 to be 0.0192 kg/ft3. Replacing the parameter ''E_{CO2}'' with ''$E_{a,CO2}$'' in the parameter definition for Equation W–39A in 40 CFR 98.233(z)(2)(iii) to match the parameters in the equation.
- Revising the definition of ''HHV'' in Equation W–40 in 40 CFR 98.233(z)(2)(vi) to reflect the ''higher'' heating value represented by the acronym.
- Amending 40 CFR 98.236(c)(5)(ii)(D) to clarify that the average internal casing diameter of all wells, as opposed to each well, must be reported.
- Amending 40 CFR 98.236(c)(9) to remove reference to the optical gas imaging instrument.
- Amending 40 CFR 98.236(c)(13)(iii)(C) to replace the units of ''cubic feet per hour'' with ''metric tons of CO_2e for each gas'' to align the units of this data reporting element to those of the general provisions of Part 98, 40 CFR 98.3(c)(4)(i), which require reporting of annual emissions in units of mass in metric tons of CO_2e.
- Updating the incorrect reference to ''Equation W–30'' in 40 CFR 98.236(c)(15)(i)(B) to read ''Equation W–30A,'' updating the incorrect reference to ''Equation W–30'' in 40 CFR 98.236(c)(15)(i)(C) to read ''Equation W–30A,'' and deleting the unnecessary reference to ''parameter GHGi'' in 40 CFR 98.236(c)(15)(i)(C).
- Removing the text references to ''(a)(4)'' and ''W–3'' in 40 CFR 98.236(c)(15)(ii)(A) by deleting the unnecessary references to ''(a)(8).''
- Deleting ''and CH4'' from the reporting requirements for EOR injection pumps in 40 CFR 98.236(c)(17)(v) to make the data reporting requirements consistent with the calculation procedures in Equation W–37.
- Revising the incorrect title of Table W–1A of subpart W by deleting ''Table A–1A'' and correcting it to ''Table W–1A.''
- Correcting the emission factors in Table W–1A of subpart W as proposed.
- Amending Table W–5 of subpart W to provide the cross-reference for footnote 2, by adding a reference associated with footnote 2 to Vapor Recovery Compressor.

In addition to finalizing the amendments proposed in the 2012 Technical Corrections Proposal, the EPA is finalizing several additional corrections to address areas where further clarifications to the subpart W were considered appropriate based on comments received on the 2012 Technical Corrections Proposal:

- Removing the factors 365 days and ''T'' from Equation W–6 of subpart W and adding a new factor ''N'' for the number of dehydrator openings in the calendar year.
- Correcting the definition of parameter ''SPp'' in Equations W–8 to state that casing pressure is to be measured for wells with no packer, as opposed to taking the shut-in pressure or surface pressure measurement for wells with no packers.
- Correcting the definition of the term ''PRs,p'' in Equation W–10A to remove the phrase ''under actual conditions, converted to standard conditions.''
- Correcting the definition of the terms ''SGs,p'' and ''EnFs,p'' in Equation W–10A to include omitted subscripts in the parameter references.
- Correcting the definition of the term ''W'' in Equation W–12 by replacing the word ''formation'' with ''combination.''
- Amending 40 CFR 98.233(o)(5), (o)(6), (o)(7), (p)(7), and (p)(7)(i) to clarify that the annual emissions must be estimated for each compressor for each mode-source combination measured in the reporting year.
- Correcting the definitions of the terms ''Es,n'' and ''Ea,n'' in Equation W–33 by deleting the parentheses around the terms ''FRs,p'' and ''FRa,p'', respectively.
- Amending 40 CFR 98.236(c)(6), (c)(13)(i)(G), (c)(13)(ii)(C), (c)(13)(iii)(C),

(c)(13)(iv), (c)(13)(v)(B), (c)(14)(i)(C), (c)(14)(ii)(C), (c)(14)(iii)(C), (c)(14)(iv), and (c)(14)(v)(B) to clarify emission reporting requirements for compressors.

Since the amendments to subpart W finalized in this action do not change the type of information that must be collected, the methods used to collect the data, or materially affect how the emissions are calculated, we are requiring reporters to implement the amendments finalized in this action for the September 28, 2012 reporting deadline.

2. Summary of Comments and Responses

This section contains a brief summary of comments on the proposed changes to subpart W and responses. Additional comments and responses thereto can be found in the document, ''Response to Comments: 2012 Technical Corrections, Clarifying and Other Amendments of the Mandatory Reporting of Greenhouse Gases Rule, and Confidentiality Determinations for Certain Data Elements of the Fluorinated Gas Source Category'' (see EPA–HQ–OAR–2011–0147).

The EPA received several comments on the 2012 Technical Corrections Proposal that the EPA has determined to be out of the scope of this rulemaking. These comments were diverse in nature, and covered several provisions within subpart W. Some of the comments were more technical in nature, for example, one comment included a revised definition of parameter ''Tp'' of Equation W–7 to allow for reporters to use alternative methods such as engineering estimates based on best available data to determine the cumulative amount of time in hours of venting for specific wells. Other comments included more substantive revisions and clarifications to the final provisions, for example several comments were submitted on the monitoring provisions for both centrifugal and reciprocating compressors and included revisions to equation parameters and definitions and address concerns previously raised by reporters. Also, by way of a third example, some of the comments submitted were requests for clarification on the final provisions, for example, one comment included a request for clarification on the requirement in 40 CFR 98.236 for reporting of ''annual throughput as determined by engineering estimate based on best available data.'' The EPA has reviewed these comments, and although these comments are out of the scope of the 2012 Technical Corrections proposal, the EPA is considering ways to address these comments including possible future rulemakings or development of materials to post on EPA's subpart W Web site.

Comment: One commenter recommended that Equation W–6 be amended to account for situations where desiccant dehydrator molecular sieves are used. The commenter further stated that this change was necessary because natural gas processors commonly use desiccant dehydrator molecular sieves which typically only require the dehydrator to be opened to the atmosphere once every 3 or 4 years when the molecular sieves are replaced. The commenter noted that the proposed Equation W–6 accounts for the number of dehydrator vessel openings by dividing 365 days per year by the number of days ''T'' between refilling. The commenter recommended revising Equation W–6 by removing both the 365 day factor in the numerator and the variable ''T'' in the denominator and adding a new term ''N'' (number of dehydrator change-outs per year) to the numerator.

Response: The EPA has reviewed the commenter's suggested change to Equation W–6 to account for situations where desiccant dehydrator molecular sieves are used in desiccant dehydrators such that the equation will accurately adjust for the number of times the dehydrator vessel is opened to the atmosphere when it may occur less frequently than once per year. While the revision that EPA proposed in the 2012 Technical Corrections Proposal included a proposed amendment to Equation W–6 separate from what the commenter suggested, we agree that Equation W–6 can be amended as noted by the commenter to adjust for dehydrator vessels that are opened once over a multiple year time period. In these cases where vessels are opened less frequently than once per year, using Equation W–6 as written in the final subpart W rule would result in an inaccurate estimate of emissions. Therefore, we have amended Equation W–6 of subpart W as recommended by the commenter. EPA believes that finalizing this technical correction does not change the type of information collected by reporters who would use this equation, and that it is feasible to implement this correction for the 2011 reporting year.

Comment: Two commenters expressed support for EPA's proposed technical corrections to Equations W–23, W–24, W–27, and W–28. However, two commenters further noted that even though the 2012 Technical Corrections Proposal correctly proposed removing the summation terms in Equations W–23, W–24, W–27 and W–28, the equations for calculating emissions from centrifugal compressors (Equations W–23 and W–24) and reciprocating compressors (Equations W–27 and W–28) were still incomplete because either the parameters or the definitions of those parameters did not fully align with the proposed technical amendments. Commenters recommended either revising the parameter definition for ''$E_{s,i}$'' or including a definition for the operator ''m'' in the equation definitions for Equation W–23 and W–27. Commenters also recommended including a definition for the parameter ''$MT_{m,p}$'' in Equation W–24 and W–28.

Response: In the 2012 Technical Corrections Proposal, the EPA proposed to make corrections, though few, to Equations W–23, W–24, W–27 and W–28 so that owners and operators would correctly calculate GHG emissions using those equations. In this action, the EPA is finalizing the amendments to both the centrifugal compressor and reciprocating compressor emission sources as proposed in the 2012 Technical Corrections Proposal. In response to those comments, the EPA is finalizing a limited set of additional corrections for both the centrifugal and reciprocating compressor emission sources. Specifically, in Equations W–23 and W–27, the EPA has finalized a correction to the definition for parameter ''$E_{s,i}$'' such that the proposed amendments in the 2012 Technical Corrections Rule would correctly align with the proposed amendment to remove the erroneous summation sign from these equations. EPA has reviewed the comments submitted, and in this action is revising the definition for parameter ''$E_{s,i}$'' in Equations W–23 and W–27, by adding the subscript ''m'' so the parameter now reads ''$E_{s,i,m}$''. EPA has also revised the parameter definition to clarify that the annual volumetric GHG emissions are to be calculated for each centrifugal compressor (for Equation W–23) and for each reciprocating compressor (Equation W–27) for each of the mode-source combination in cubic feet. Similarly, for Equations W–24 and W–28 the EPA has revised the definition for parameters ''$MT_{m,p}$'' and ''m'' in response to comments received on the 2012 Technical Corrections proposed rule. The definition for parameter ''$MT_{m,p}$'' has been clarified to state that this parameter refers to the flow measurement from all compressor sources in each mode-source combination in standard cubic feet per hour, and the definition for parameter

''m'' has been clarified to state that this parameter refers to each compressor mode-source combination.

Comment: One commenter agreed with the proposed change to 40 CFR 98.236(c)(13)(iii)(C) to correct the units for the centrifugal compressor emission source to be reported in units of mass as opposed to units of cubic feet per hour. This same commenter further noted that EPA should also apply a correction to the data reporting requirements for other provisions in 40 CFR 98.236(c)(13) and (c)(14) such that data from these two emissions sources, centrifugal compressors and reciprocating compressors would be reported consistently on a mass unit basis. The commenter also noted that the references to the equations in 40 CFR 98.233 that are cited in the data reporting requirements for 40 CFR 98.236(c)(13) and (14) should be removed.

Response: In the 2012 Technical Corrections Proposal, the EPA proposed a correction to the reporting units for centrifugal compressors such that the data would be reported in mass units for carbon dioxide equivalent instead of units of cubic feet per minute. EPA agrees with the commenters and has corrected the units for the applicable provisions in 40 CFR 98.236(c)(13) and (14) such that the data will be reported consistently on a mass basis. The EPA recognizes that corrections to the units to the data reporting requirements in 40 CFR 98.236(c)(13) and (14) were not proposed in the 2012 Technical Corrections Proposal; however, the EPA believes that applying the correction proposed in the 2012 Technical Corrections Proposal throughout the data reporting requirements for these emission sources would be logical, and would also assist reporters in submitting the data. Subpart W reporters are required to submit their data to the EPA by September 28, 2012 for data collected in 2011. Because these reports are being submitted for the first time, the EPA considers this amendment necessary to ensure that the units for these data reporting requirements are consistent. Further, the EPA believes that this change is a technical correction that is logical in nature to apply to similar provisions for these two emission sources. Further, EPA believes that this change would result in less burden on reporters. Lastly, in line with the commenters suggestion to remove the 40 CFR 98.233 equation references found within specific data elements in 40 CFR 98.236(c)(13) and (14), EPA has agreed with the commenter and in this action has removed the 40 CFR 98.233 equation references from the following data reporting elements, 40 CFR 98.236(c)(13)(i)(G), 98.236(c)(13)(ii)(C), 98.236(c)(13)(iii)(C), 98.236(c)(14)(i)(C), 98.236(c)(14)(ii)(C), 98.236(c)(14)(iii)(C), and 98.236(c)(14)(iv).

Comment: One commenter questioned the proposed amendments to the population emission factors in Table W–1A of subpart W. This commenter specifically questioned why the EPA increased the emission factors for valves, flanges, connectors, open-ended lines, and ''other'' components as listed in Table W–1A to Subpart W. The commenter further noted that the values previously included in Table W–1A were close to the commenter's estimates when rounded up. Finally, the commenter recommended EPA not revise the Table W–1A emission factors for valves, flanges, connectors, open-ended lines, and ''other'' components.

Response: The EPA disagrees with the commenter that the Table W–1A population emission factors should not be revised. In the December 2011 technical corrections final rule (76 FR 80592), the emission factors were converted from a standard temperature of 68 °F to a standard temperature of 60 °F. In the December 2011 Final Rule, the EPA inadvertently used an incorrect intermediary version of Table W–1A to convert the emission factors, including the emission factors for the components noted by the commenter. The emission factors proposed in the 2012 Technical Corrections for Table W–1A show the emission factors correctly adjusted to a standard temperature of 60 °F. In this action, EPA is finalizing the emission factors in Table W–1A as proposed in the 2012 Technical Corrections Proposal.

Comment: One commenter stated that Equation W–14A contains an error in the purge factor that causes the equation to yield erroneous results. The commenter further stated that because the volume being purged is converted from actual cubic feet to standard cubic feet, inconsistent units were being subtracted, (i.e. standard cubic feet purged and actual cubic feet ''purge factor'') in Equation W–14A. The commenter also stated that the inconsistency would result in a negative number if the volume of the purged item in standard cubic feet was less than that of actual cubic feet, (i.e. actual conditions are hotter or a lower pressure than standard conditions). Finally, the commenter stated that if the item is not being purged, the commenter believes the calculation should not be used, as there would be no GHG emissions from the blowdown stack.

Response: The EPA agrees with the commenter that the natural gas remaining in the unique physical volume after the blowdown is complete without purging is at actual conditions. However, after a blowdown, ''actual conditions'' are essentially equivalent to atmospheric conditions, or standard conditions (as a simplifying assumption explained further below).

Equation W–14A calculates the volume of natural gas emitted from blowdowns. When equipment is depressurized, the gas contained in the unique volume expands as it goes from actual conditions (process pressure and temperature) to standard conditions (i.e., atmospheric pressure and temperature). Equation W–14A accounts for this physical change. After expansion (i.e., venting), some gas will remain in the equipment or unique physical volume if the equipment is not purged. This unvented gas should be subtracted from the volume of expanded gas. If the remaining gas in the equipment is purged, then the purge factor in Equation W–14A equals zero and nothing will be subtracted from the emissions calculated earlier in the equation as all of the expanded gas volume has been emitted to the atmosphere. If the remaining gas is not purged, then the purge factor equals one and the unique physical volume will be subtracted as it was not vented and released to the atmosphere. There are several simplifying assumptions in the equation to facilitate its use. It is assumed that the process temperature and/or pressure are significantly different than standard conditions. It is also assumed that the equipment is fully vented to the atmosphere, resulting in the final condition of the gas being at atmospheric temperature and pressure. It is also assumed that the atmospheric temperature and pressure are not significantly different than standard conditions. These simplifying assumptions are true in a majority, if not all cases.

D. Subpart L—Fluorinated Gas Production

1. Summary of Final Amendments and Confidentiality Determinations

Final amendments. As explained in Section I.D of this preamble, the EPA is deferring detailed reporting of GHG emissions from fluorinated gas production facilities until 2014 in today's final rule. In the meantime, the EPA is requiring that GHG emissions be reported in a more aggregated manner than previously required for the initial two years of reporting under subpart L. These changes pertain only to subpart L, and are temporary (i.e., for reporting in 2012 and 2013) to allow the EPA

sufficient time to fully evaluate concerns raised by stakeholders that reporting, and subsequent EPA release, of certain emissions would reveal trade secrets.

For reporting in 2012 and 2013, we are requiring owners and operators of facilities producing fluorinated gases to report annual total facility-wide fluorinated GHG emissions from 2011 and 2012 respectively in tons of CO_2e.[8] The facilities are not required to report process level emissions or individual fluorinated GHGs in 2012 and 2013. These amendments do not change any other requirements of Part 98 or affect the deferral of the reporting deadline for subpart L data elements used as inputs to emission equations until March 31, 2015 (76 FR 53057, August 25, 2011). These amendments do not change the requirement that these subpart L data elements in today's final rule be retained as records in a form that is suitable for expeditious inspection and review (required for all Part 98 records by 40 CFR 98.3(g)).

As proposed, this final rule provides that owners and operators of facilities producing fluorinated gases are not required to submit the data elements listed below until March 31, 2014:

- 40 CFR 98.3(c)(4)(iii)
- 40 CFR 98.126 (a)(2), (a)(3), (a)(4), (a)(6), (b), (c), (d), (e), (f), (g), and (h).

Fluorinated gas producers subject to subpart L are required to report only the data elements in 40 CFR 98.126(a)(5) (the methods used) and in paragraph 40 CFR 98.126(j) (facility-level CO_2e emissions) for reporting of 2011 and 2012 emissions in 2012 and 2013. Consistent with 40 CFR 98.126(e), a facility must include any excess emissions, converted to CO_2e, that result from malfunctions of the destruction device when reporting total facility CO_2e under 40 CFR 98.126(j). However, as noted in 40 CFR 98.126(j), these excess emissions do not need to be reported separately, but must be included in the facility-wide CO_2e reported. In this action, we have also amended 98.126(a)(5) as proposed to require facilities to report the methods used to determine emissions at a facility level rather than linking each method to a particular process.

The EPA requires that facilities use Equation A–1 of subpart A to calculate CO_2e from the mass of fluorinated GHG emissions. For fluorinated GHGs that do not have a global warming potential (GWP) listed in Table A–1, facilities are required to use either a default GWP or their best estimate of the GWP, based on the information described in 40 CFR 98.123(c)(1)(vi)(A)(*3*).[9] As discussed further in Section II.D.2 of this preamble, we have clarified that use of quantitative structure activity relationships (QSARs), which are based on the chemical structure of the compound, is an acceptable method for estimating the GWP in situations where neither pure standards of the compound nor fourier transform infrared spectroscopy (FTIR) spectra for the chemicals mixed with the compound (i.e., impurities) are available.

As proposed, the default GWP used depends on the type of fluorinated GHG. For fully fluorinated GHGs, the default GWP is 10,000, which is based on the average GWP of the fully fluorinated GHGs in Table A–1 of subpart A. For the purposes of subpart L, the EPA is finalizing as proposed the addition of the definition of ''fully fluorinated GHGs'' to 40 CFR 98.128: ''Fluorinated GHGs that contain only single bonds and in which all available valence locations are filled by fluorine atoms. This includes, but is not limited to saturated perfluorocarbons, SF_6, NF_3, SF_5CF_3, fully fluorinated linear, branched and cyclic alkanes, fully fluorinated ethers, fully fluorinated tertiary amines, fully fluorinated aminoethers, and perfluoropolyethers.'' As proposed, for other fluorinated GHGs, the default GWP is 2,000, which is based on the average GWP of the other fluorinated GHGs on Table A–1 of subpart A.

As proposed, we are adding four new data elements to the subpart L reporting requirements. Facilities that use one or more default or best-estimate GWPs are required to report the amounts of CO_2e emissions that were calculated using each of the two default values as well as using best-estimate GWPs. This enables the EPA to understand the potential impact of the default or best-estimate GWPs on the uncertainty of the overall estimated emissions of the facility. (Default and best-estimate GWPs are likely to have higher uncertainties than GWPs from Table A–1.) Also as proposed, facilities using default or best-estimate GWPs for fluorinated GHGs without GWPs in Table A–1 of subpart A are required to keep records of the GWP they used for each GHG. As proposed, facilities using best-estimate GWPs are also required to keep records of the data and analysis that were used to develop the GWPs, in a form that is suitable for expeditious inspection and review (required for all Part 98 records by 40 CFR 98.3(g)). As discussed further in Section II.D.2 of this preamble, we are updating the proposed recordkeeping requirement to specify that where QSARs are used to estimate GWPs, facilities must retain information related to the reliability of GWPs based on the QSARs.

Final Confidentiality Determinations. We are finalizing the confidentiality determinations for the four new subpart L data elements (listed in Table 2 of this preamble) as proposed. In the proposal, we assigned these four data elements to the ''Emissions'' data category because they describe emissions exhausted to the atmosphere, and apply to these data elements the categorical confidentiality determination the EPA made in the 2011 Final CBI rule for that data category, i.e., the data elements in this data category are ''emission data'' under CAA section 114(c) and 40 CFR 2.301(a)(2)(i). We received no comments on our proposed category assignment and confidentiality determination described above. We are therefore finalizing the determination that these data elements are ''emission data,'' which are not eligible for confidential treatment under section 114(c) of the CAA.

[8] This includes emissions from all fluorinated gas production processes, all fluorinated gas transformation processes that are not part of a fluorinated gas production process, all fluorinated gas destruction processes that are not part of a fluorinated gas production process or a fluorinated gas transformation process, and venting of residual fluorinated GHGs from containers returned from the field.

[9] This is part of the provision of subpart L that allows facilities to request to use provisional GWPs to calculate whether they must use stack testing to establish an emission factor for a vent. Note that EPA is not requiring approval of best-estimate GWPs in this action.

TABLE 2—REPORTING DATA ELEMENTS AND CONFIDENTIALITY DETERMINATIONS

	Citation	Data element	Data category (finalized CBI determination [10])
1	98.126(j)(3)	You must report the total fluorinated GHG emissions of the facility, expressed in tons of CO_2e.	Emissions (Emission Data: Made available to the public).
2	98.126(j)(3)(ii)	Provide the total annual emissions across fluorinated GHGs for the entire facility, in metric tons of CO_2e, that were calculated using the default GWP of 2000.	Emissions (Emission Data: Made available to the public).
3	98.126(j)(3)(iii)	Provide the total annual emissions across fluorinated GHGs for the entire facility, in metric tons of CO_2e, that were calculated using the default GWP of 10,000.	Emissions (Emission Data: Made available to the public).
4	98.126(j)(3)(iv)	Provide the total annual emissions across fluorinated GHGs for the entire facility, in metric tons of CO_2e, that were calculated using your best estimate of the GWP.	Emissions (Emission Data: Made available to the public).

2. Summary of Comments and Responses

This section contains a brief summary of comments on the proposed changes to subpart L and responses.

Additional comments and responses thereto can be found in the document, ''Response to Comments: 2012 Technical Corrections, Clarifying and Other Amendments of the Mandatory Reporting of Greenhouse Gases Rule, and Confidentiality Determinations for Certain Data Elements of the Fluorinated Gas Source Category'' (see EPA–HQ–OAR–2011–0147).

Comment: One commenter recommended that 40 CFR 98.126(j) be revised to clarify that comparable methods for best-estimate GWPs based on use of professional judgment are acceptable if they result in accuracy that is comparable to the accuracy associated with the methods described in 40 CFR 98.123(c)(1)(vi)(A)(3). This commenter stated that measurement of the low-pressure gas phase infrared absorption spectrum for a particular fluorinated GHG is not possible where neither pure standards of the ''target'' fluorinated GHG nor FTIR spectra for the impurities are available. In such circumstances, the commenter recommended the EPA allow reporters to use quantitative structure activity relationships (QSARs) that mathematically relate the radiative forcing and/or atmospheric lifetime (i.e., reaction rate) of a compound to the chemical's structure (i.e., type of compound, number of carbon-halogen bonds, etc.). The commenter believes that QSARs are a valid approach for obtaining a ''best estimate'' of GWP in situations where infrared spectroscopy cannot be used and that this approach is consistent with the methods that are described in 40 CFR 98.123(c)(1)(vi)(A)(3). The commenter also stated that comparisons between measured and QSAR-derived GWPs have shown that the uncertainty associated with QSAR-derived estimates of radiative forcing is between 18 to 23 percent and that the uncertainty associated with QSAR-derived estimates of the atmospheric lifetime is 30 percent on average for a given class of compounds. The commenter stated that the overall uncertainty of QSAR-derived GWPs is a combination of these two uncertainties, but that use of a QSAR-based GWP is still more accurate than the default GWPs of 2,000 or 10,000 provided in the rule.

Response: The EPA agrees with the commenter that for purposes of this rule, use of QSARs is an acceptable alternative method for estimating GWPs of fluorinated GHGs that do not have a GWP listed in Table A–1 of subpart A. QSARs are based on statistical analysis correlating the chemical or biological activity of compounds (including, e.g., radiative forcing and reaction rates) with their molecular structure and/or properties. The activity of one or more compounds is estimated (modeled) based on the activity of compounds with similar structures. The accuracy of QSAR-derived estimates depends on the structural similarity between the ''target'' compound and the group of compounds (often called ''analogs'') used to model it and on the quantity and quality of the measurements of the activity of the analogs, among other factors. We are finding use of QSARs acceptable for purposes of this rule because they can provide reasonable estimates of the likely radiative forcing [11] and lifetime of the compound, which is what the provisions described at 40 CFR 98.123(c)(1)(vi)(A)(*3*) are intended to ensure.

As requested by the commenter, we have revised 40 CFR 98.126(j) to specify that the use of QSARs for determining GWPs is an acceptable method for situations where the infrared spectrum of a fluorinated GHG cannot be measured because neither pure standards of the ''target'' fluorinated GHG nor FTIR spectra for the impurities are available. In addition, we have revised the proposed recordkeeping requirements at 40 CFR 98.127 to require retention of information related to the reliability of GWPs based on QSARs. This includes information on how the structure of the ''target'' fluorinated GHG is similar to the structures of the fluorinated GHGs used to model the radiative forcing and/or reaction rate of the ''target'' fluorinated GHG, the quality and quantity of the measurements of the radiative forcings and/or reaction rates of the fluorinated GHGs used to model these parameters for the ''target'' fluorinated GHG, any estimated uncertainties of the modeled forcings and/or reaction rates, and descriptions and results of any efforts to validate the QSAR model(s).

Although we find the use of QSARs to be acceptable in this situation, we disagree with the commenter's recommendation that the rule be revised to state that any comparable methods based on use of professional judgment are acceptable if they result in accuracy that is comparable to the accuracy associated with the methods described in 40 CFR 98.123(c)(1)(vi)(A)(3). Since the commenter provided no description of any other alternative methods, we are unable to assess whether other methods based on professional judgment would

[10] The CBI determinations of these data categories were finalized in the 2011 Final CBI Rule (May 26, 2011, 76 FR 30782).

[11] Note that the actual radiative forcing also depends on other variables, such as whether or not the gas is sufficiently long-lived to become well-mixed in the atmosphere.

provide an acceptable level of accuracy. Thus, we are not including a blanket provision permitting use of comparable methods based on professional judgment.

III. Statutory and Executive Order Reviews

A. Executive Order 12866: Regulatory Planning and Review and Executive Order 13563: Improving Regulation and Regulatory Review

This final rule, which finalizes several corrections to specific provisions in subparts A, TT, W, and L to provide greater clarity and flexibility to facilities subject to reporting in 2012 and finalizes confidentiality determinations for amended subpart L reporting requirements, is not a ''significant regulatory action'' under the terms of Executive Order 12866 (58 FR 51735, October 4, 1993) and is therefore not subject to review under Executive Orders 12866 and 13563 (76 FR 3821, January 21, 2011).

B. Paperwork Reduction Act

These final rule amendments and confidentiality determinations do not increase the recordkeeping and reporting burden associated with Part 98. The amendments to subpart L result in a net decrease in burden since they result in less detailed reporting under subpart L than would otherwise have been required by the December 2010 subpart L final rule. Although we have added new recordkeeping provisions to subpart L, these apply only to those facilities electing to use the optional QSAR approach to determining GWPs instead of the default factors provided in the rule. Additionally, the subpart L confidentiality determinations do not impose any additional burden. The subpart A amendment is merely a harmonizing change to a technical correction finalized in February 2012 for subpart I that clarifies the existing reporting requirements. The subpart TT amendment excludes some facilities from the reporting requirements and reduces the burden by making it easier for facilities to determine applicability of subpart TT under the GHG Reporting Rule. Finally, the subpart W amendments are technical corrections and clarifications that help clarify GHG calculations and reporting and do not materially affect the actions facilities must take to comply with the rule or add any additional reporting requirements. The OMB has previously approved the information collection requirements for subparts A on October 30, 2009, subpart L on December 1, 2010, subpart W promulgated on November 30, 2010, subpart TT promulgated on July 12, 2010 under 40 CFR part 98 under the provisions of the *Paperwork Reduction Act,* 44 U.S.C. 3501 *et seq.,* and has assigned OMB control numbers 2060–0629; 2060–0650; and 2060–0647; and 2060–0649 respectively. The OMB control numbers for the EPA's regulations in 40 CFR are listed in 40 CFR part 9. Further information on the EPA's assessment on the impact on burden can be found in the 2012 Technical Corrections and Amendments Cost Memo in docket number EPA–HQ–OAR–2011–0147.

C. Regulatory Flexibility Act (RFA)

The RFA generally requires an agency to prepare a regulatory flexibility analysis of any rule subject to notice and comment rulemaking requirements under the Administrative Procedure Act or any other statute unless the agency certifies that the rule will not have a significant economic impact on a substantial number of small entities. Small entities include small businesses, small organizations, and small governmental jurisdictions.

For purposes of assessing the impacts of this final rule on small entities, a small entity is defined as: (1) A small business as defined by the Small Business Administration's regulations at 13 CFR 121.201; (2) a small governmental jurisdiction that is a government of a city, county, town, school district or special district with a population of less than 50,000; and (3) a small organization that is any not-for-profit enterprise which is independently owned and operated and is not dominant in its field.

After considering the economic impacts of these final rule amendments on small entities, I certify that this action will not have a significant economic impact on a substantial number of small entities. These rule amendments and confidentiality determinations will not impose any additional burden on small entities beyond that currently required by 40 CFR part 98, subpart A promulgated on October 30, 2009; subpart TT promulgated on July 12, 2010; subpart W promulgated on November 30, 2010, or subpart L promulgated on December 1, 2010. The EPA is promulgating the amendments in this action to provide clarity, add flexibility, to address ambiguity in the rule provisions, and to make corrections where necessary to assist reporters in implementation of these subparts.

Further, the EPA took several steps to reduce the impact of 40 CFR part 98 on small entities when developing the final GHG reporting rules in 2009 and 2010. Specifically, the EPA determined appropriate thresholds that reduced the number of small businesses reporting. In addition, the EPA conducted several meetings with industry associations to discuss regulatory options and the corresponding burden on industry, such as recordkeeping and reporting. Finally, the EPA continues to conduct significant outreach on the GHG reporting program and maintains an ''open door'' policy for stakeholders to help inform the EPA's understanding of key issues for the industries.

D. Unfunded Mandates Reform Act (UMRA)

This final rule does not contain a Federal mandate that may result in expenditures of $100 million or more for state, local, and tribal governments, in the aggregate, or the private sector in any one year. Thus, the final rule amendments and confidentiality determinations for are not subject to the requirements of section 202 and 205 of the UMRA. This rule is also not subject to the requirements of section 203 of UMRA because it contains no regulatory requirements that might significantly or uniquely affect small governments. The final amendments will not impose any new requirements that are not currently required for 40 CFR part 98, and the final rule amendments will not unfairly apply to small governments. Therefore, this action is not subject to the requirements of section 203 of the UMRA.

E. Executive Order 13132: Federalism

The final rule amendments and confidential determinations to part 98 do not have federalism implications. They will not have substantial direct effects on the states, on the relationship between the national government and the states, or on the distribution of power and responsibilities among the various levels of government, as specified in Executive Order 13132. These amendments and confidentiality determinations apply directly to facilities that supply certain products that would result in GHGs when released, combusted or oxidized and facilities that directly emit greenhouse gases. They do not apply to governmental entities unless the government entity owns a facility that directly emits GHGs above threshold levels, so relatively few government facilities would be affected. This regulation also does not limit the power of states or localities to collect GHG data and/or regulate GHG emissions. Thus, Executive Order 13132 does not apply to this action.

Although section 6 of Executive Order 13132 does not apply to this action, the EPA did consult with state and local officials or representatives of state and local governments in developing subparts A on October 30, 2009; subpart TT promulgated on July 12, 2010; subpart W promulgated on November 30, 2010; and subpart L promulgated on December 1, 2010. A summary of the EPA's consultations with state and local governments is provided in Section VIII.E of the preamble to the 2009 final rule.

F. Executive Order 13175: Consultation and Coordination With Indian Tribal Governments

This action does not have tribal implications, as specified in Executive Order 13175 (65 FR 67249, November 9, 2000). This final rule, which finalizes several corrections to specific provisions in subparts A, TT, W, and L to provide greater clarity and flexibility to facilities subject to reporting in 2012 and finalizes confidentiality determinations for amended subpart L reporting requirements, will not increase the burden associated with the current requirements of 40 CFR part 98. Thus, Executive Order 13175 does not apply to this action.

G. Executive Order 13045: Protection of Children From Environmental Health Risks and Safety Risks

The EPA interprets Executive Order 13045 (62 FR 19885, April 23, 1997) as applying only to those regulatory actions that concern health or safety risks, such that the analysis required under section 5–501 of the Executive Order has the potential to influence the regulation. This action is not subject to Executive Order 13045 because it does not establish an environmental standard intended to mitigate health or safety risks.

H. Executive Order 13211: Actions That Significantly Affect Energy Supply, Distribution, or Use

This action is not subject to Executive Order 13211 (66 FR 28355, May 22, 2001), because it is not a significant regulatory action under Executive Order 12866.

I. National Technology Transfer and Advancement Act

Section 12(d) of the National Technology Transfer and Advancement Act of 1995 (NTTAA), Public Law 104–113 (15 U.S.C. 272 note) directs the EPA to use voluntary consensus standards in its regulatory activities unless to do so would be inconsistent with applicable law or otherwise impractical. Voluntary consensus standards are technical standards (e.g., materials specifications, test methods, sampling procedures, and business practices) that are developed or adopted by voluntary consensus standards bodies. NTTAA directs the EPA to provide Congress, through OMB, explanations when the EPA decides not to use available and applicable voluntary consensus standards. The final rule amendments do not involve technical standards. Therefore, the EPA did not consider the use of any voluntary consensus standards.

J. Executive Order 12898: Federal Actions to Address Environmental Justice in Minority Populations and Low-Income Populations

Executive Order 12898 (59 FR 7629, February 16, 1994) establishes federal executive policy on environmental justice. Its main provision directs federal agencies, to the greatest extent practicable and permitted by law, to make environmental justice part of their mission by identifying and addressing, as appropriate, disproportionately high and adverse human health or environmental effects of their programs, policies, and activities on minority populations and low-income populations in the United States.

The EPA has determined that the final rule amendments and confidentiality determinations will not have disproportionately high and adverse human health or environmental effects on minority or low-income populations because it does not affect the level of protection provided to human health or the environment because it is a rule addressing information collection and reporting procedures.

K. Congressional Review Act

The Congressional Review Act, 5 U.S.C. 801 *et seq.,* as added by the Small Business Regulatory Enforcement Fairness Act of 1996 (SBREFA), generally provides that before a rule may take effect, the agency promulgating the rule must submit a rule report, which includes a copy of the rule, to each House of the Congress and to the Comptroller General of the United States. The EPA will submit a report containing this rule and other required information to the U.S. Senate, the U.S. House of Representatives, and the Comptroller General of the United States prior to publication in the **Federal Register**. A major rule cannot take effect until 60 days after it is published in the **Federal Register**. This action is not a ''major rule'' as defined by 5 U.S.C. 804(2). This final rule is effective on August 24, 2012, except for the amendments to 40 CFR 98.3(c)(4) (the subpart A amendments that affect subpart I) and the confidentiality determinations for subpart L, which are effective on September 24, 2012.

List of Subjects in 40 CFR Part 98

Environmental protection, Administrative practice and procedure, Greenhouse gases, Suppliers, Reporting and recordkeeping requirements.

Dated: August 3, 2012.

Lisa P. Jackson,

Administrator.

For the reasons stated in the preamble, title 40, chapter I, of the Code of Federal Regulations is amended as follows:

PART 98—[AMENDED]

■ 1. The authority citation for part 98 continues to read as follows:

Authority: 42 U.S.C. 7401 *et seq.*

Subpart A—[Amended]

■ 2. Amend § 98.3 by:
■ a. Revising paragraphs (c)(4) introductory text, (c)(4)(i), and (c)(4)(iii)(E);
■ b. Adding paragraph (c)(4)(iii)(F); and
■ c. Revising paragraph (c)(4)(vi).
■ The additions and revisions read as follows:

§ 98.3 What are the general monitoring, reporting, recordkeeping and verification requirements of this part?

* * * * *

(c) * * *

(4) For facilities, except as otherwise provided in paragraph (c)(12) of this section, report annual emissions of CO_2, CH_4, N_2O, each fluorinated GHG (as defined in § 98.6), and each fluorinated heat transfer fluid (as defined in § 98.98) as follows.

(i) Annual emissions (excluding biogenic CO_2) aggregated for all GHG from all applicable source categories, expressed in metric tons of CO_2e calculated using Equation A–1 of this subpart. For electronics manufacturing (as defined in § 98.90), starting in reporting year 2012 the CO_2e calculation must include each fluorinated heat transfer fluid (as defined in § 98.98) whether or not it is also a fluorinated GHG.

* * * * *

(iii) * * *

(E) Each fluorinated GHG (as defined in § 98.6), including those not listed in Table A–1 of this subpart.

(F) For electronics manufacturing (as defined in § 98.90), each fluorinated heat transfer fluid (as defined in § 98.98) that is not also a fluorinated GHG as specified under (c)(4)(iii)(E) of this

section. This requirement applies beginning in reporting year 2012.

* * * * *

(vi) When applying paragraph (c)(4)(i) of this section to fluorinated GHGs and fluorinated heat transfer fluids, calculate and report CO_2e for only those fluorinated GHGs and fluorinated heat transfer fluids listed in Table A–1 of this subpart.

* * * * *

■ 3. Amend Table A–7 to subpart A of part 98 by revising the entries for subpart L to read as follows:

TABLE A–7 TO SUBPART A OF PART 98—DATA ELEMENTS THAT ARE INPUTS TO EMISSION EQUATIONS AND FOR WHICH THE REPORTING DEADLINE IS MARCH 31, 2015

Subpart	Rule citation (40 CFR part 98)	Specific data elements for which reporting date is March 31, 2015 ("All" means all data elements in the cited paragraph are not required to be reported until March 31, 2015)
*	*	*
L	98.126(b)(1)	Only data used in calculating the absolute errors and data used in calculating the relative errors.
L	98.126(b)(2)	All.
L	98.126(b)(6)	Only mass of each fluorine-containing reactant fed into the process.
L	98.126(b)(7)	Only mass of each fluorine-containing product produced by the process.
L	98.126(b)(8)(i)	Only mass of each fluorine-containing product that is removed from the process and fed into the destruction device.
L	98.126(b)(8)(ii)	Only mass of each fluorine-containing by-product that is removed from the process and fed into the destruction device.
L	98.126(b)(8)(iii)	Only mass of each fluorine-containing reactant that is removed from the process and fed into the destruction device.
L	98.126(b)(8)(iv)	Only mass of each fluorine-containing by-product that is removed from the process and recaptured.
L	98.126(b)(8)(v)	All.
L	98.126(b)(9)(i)	All.
L	98.126(b)(9)(ii)	All.
L	98.126(b)(9)(iii)	All.
L	98.126(b)(10)	All.
L	98.126(b)(11)	All.
L	98.126(b)(12)	All.
L	98.126(c)(1)	Only quantity of the process activity used to estimate emissions.
L	98.126(c)(2)	All.
L	98.126(d)	Only estimate of missing data.
L	98.126(f)(1)	All.
L	98.126(g)(1)	All.
L	98.126(h)(2)	All.
*	*	*

Subpart L—[Amended]

■ 4. Amend § 98.126 by:

■ a. Revising paragraphs (a) introductory text and (a)(5); and

■ b. Adding paragraph (j).

The additions and revisions read as follows:

§ 98.126 Data reporting requirements.

(a) *All facilities.* In addition to the information required by § 98.3(c), you must report the information in paragraphs (a)(2) through (a)(6) of this section according to the schedule in paragraph (a)(1) of this section, except as otherwise provided in paragraph (j) of this section or in § 98.3(c)(4)(vii) and Table A–7 of Subpart A of this part.

* * * * *

(5) The methods used to determine the mass emissions of each fluorinated GHG, i.e., mass balance, process-vent-specific emission factor, or process-vent-specific emission calculation factor, at the facility. If you use the process-vent-specific emission factor or process-vent-specific emission calculation factor method, report the methods used to estimate emissions from equipment leaks.

* * * * *

(j) *Special provisions for reporting years 2011 and 2012 only.* For reporting years 2011 and 2012, the owner or operator of a facility must comply with paragraphs (j)(1), (j)(2), and (j)(3) of this section.

(1) *Timing.* The owner or operator of a facility is not required to report the data elements at § 98.3(c)(4)(iii) and § 98.126(a)(2), (a)(3), (a)(4), (a)(6), (b), (c), (d), (e), (f), (g), and (h) of this section until the later of March 31, 2014 or the date set forth for that data element at § 98.3(c)(4)(vii) and Table A–7 of Subpart A of this part.

(2) *Excess emissions.* Excess emissions of fluorinated GHGs resulting from destruction device malfunctions must be reflected in the reported facility-wide CO_2e emissions but are not required to be reported separately.

(3) *Calculation and reporting of CO_2e.* You must report the total fluorinated

GHG emissions covered by this subpart, expressed in metric tons of CO_2e. This includes emissions from all fluorinated gas production processes, all fluorinated gas transformation processes that are not part of a fluorinated gas production process, all fluorinated gas destruction processes that are not part of a fluorinated gas production process or a fluorinated gas transformation process, and venting of residual fluorinated GHGs from containers returned from the field. To convert fluorinated GHG emissions to CO_2e for reporting under this section, use Equation A–1 of § 98.2. For fluorinated GHGs whose GWPs are not listed in Table A–1 of Subpart A of this part, use either the default GWP specified below or your best estimate of the GWP based on the information described in § 98.123(c)(1)(vi)(A)(*3*). Use of quantitative structure activity relationships (QSARs) is an acceptable method for determining GWPs in situations where pure standards of the ''target'' fluorinated GHG are not available, the ''target'' fluorinated GHG cannot be isolated from gas streams, and FTIR spectra for the impurities are not available.

(i) If you choose to use a default GWP rather than your best estimate of the GWP for fluorinated GHGs whose GWPs are not listed in Table A–1 to this subpart, use a default GWP of 10,000 for fluorinated GHGs that are fully fluorinated GHGs and use a default GWP of 2000 for other fluorinated GHGs.

(ii) Provide the total annual emissions across fluorinated GHGs for the entire facility, in metric tons of CO_2e, that were calculated using the default GWP of 2000.

(iii) Provide the total annual emissions across fluorinated GHGs for the entire facility, in metric tons of CO_2e, that were calculated using the default GWP of 10,000.

(iv) Provide the total annual emissions across fluorinated GHGs for the entire facility, in metric tons of CO_2e, that were calculated using your best estimate of the GWP.

■ 5. Amend § 98.127 by:
■ a. Revising the introductory text.
■ b. Adding paragraph (k).

The addition and revisions read as follows:

§ 98.127 Records that must be retained.

In addition to the records required by § 98.3(g), you must retain the dated records specified in paragraphs (a) through (k) of this section, as applicable.

* * * * *

(k) For fluorinated GHGs whose GWPs are not listed in Table A–1 to subpart A of this part, maintain records of the GWPs used to calculate facility-wide CO_2e emissions under § 98.127(j). Where you used your best estimate of the GWP, maintain records of the data and analysis used to develop that GWP, including the data elements at § 98.123(c)(1)(vi)(A)(*1*)through (*3*). If you have used QSARs to estimate the GWP, include information documenting the level of accuracy of the QSAR-derived GWP, including information on how the structure of the ''target'' fluorinated GHG is similar to the structures of the fluorinated GHGs used to model the radiative forcing and/or reaction rate of the ''target'' fluorinated GHG, the quality and quantity of the measurements of the radiative forcings and/or reaction rates of the fluorinated GHGs used to model these parameters for the ''target'' fluorinated GHG, any estimated uncertainties of the modeled forcings and/or reaction rates, and descriptions and results of any efforts to validate the QSAR model(s).

■ 6. Amend § 98.128 by adding the definition of ''Fully fluorinated GHGs'' in alphabetical order to read as follows:

§ 98.128 Definitions.

* * * * *

Fully fluorinated GHGs means fluorinated GHGs that contain only single bonds and in which all available valence locations are filled by fluorine atoms. This includes but is not limited to saturated perfluorocarbons, SF_6, NF_3, SF_5CF_3, fully fluorinated linear, branched and cyclic alkanes, fully fluorinated ethers, fully fluorinated tertiary amines, fully fluorinated aminoethers, and perfluoropolyethers.

* * * * *

Subpart W—[Amended]

■ 7. Amend § 98.233 by:
■ a. In paragraph (e)(5), revising Equation W–6 and all of its definitions;
■ b. Revising paragraph (f)(1) introductory text, Equation W–7, and the definition of parameter ''T_p'' in Equation W–7, removing the definition of parameter ''FR_p'', and adding in its place the definition of parameter ''FR'';
■ c. Revising paragraphs (f)(1)(i) introductory text and (f)(1)(i)(A).
■ d. In paragraph (f)(2), revising Equation W–8 and the definitions of parameters ''SP_p'', ''V_p'', and ''$HR_{p,q}$'' in Equation W–8;
■ e. Revising paragraph (f)(3) introductory text, Equation W–9, and the definitions of parameters ''W'', ''V_p'', and ''$HR_{p,q}$'' in Equation W–9;
■ f. In paragraph (g), revising Equations W–10A and W–10B, removing the definitions of ''FRM'', ''PR_p'', ''EnF_p'', ''SG_p'', and ''FV_p'', and adding in their place respectively the definitions of ''FRM_s'', ''$PR_{s,p}$'', ''$EnF_{s,p}$'', ''$SG_{s,p}$'', and ''$FV_{s,p}$'';
■ g. Revising paragraph (g)(1) introductory text;
■ h. In paragraph (g)(1)(ii), revising Equations W–11A and W–11B, and the definitions of parameter ''A'' in both Equations W–11A and W–11B, and removing the definitions of parameter ''FR'' in both Equations W–11A and W–11B,, and adding in their place respectively the definitions of parameter ''FR_a'';
■ i. In paragraph (g)(1)(iii), revising Equation W–12, and all of its definitions;
■ j. Revising paragraph (g)(3)(i);
■ k. In paragraph (h), revising the definition of parameter ''$E_{s,n}$'' in Equation W–13;
■ l. In paragraph (i)(3), revising the definition of parameter ''$E_{S,N}$'' in Equation W–14A, revising Equation W–14B, removing the definition of parameter ''T_a'' in Equation W–14B, and adding in its place the definition of parameter ''$T_{a,p}$'';
■ m. Revising paragraph (j)(5) introductory text and the definition of parameters ''Count'' and ''1,000'' in Equation W–15;
■ n. In paragraph (l)(3) introductory text revising the definition of parameter ''PR'' in Equation W–17B;
■ o. Removing and reserving paragraph (n)(7);
■ p. In paragraph (o)(5) introductory text, revising Equation W–23, removing the definition of parameter ''$E_{s,i}$'', and adding in its place the definition of parameter ''$E_{s,i,m}$'' .
■ q. In paragraph (o)(6), revising Equation W–24 and the definition of parameter ''m'', and removing the definition of parameter ''MT_m'', and adding in its place the definition of parameter ''$MT_{m,p}$'';
■ r. In paragraph (o)(7), revising the definition of ''EF_i'' in Equation W–25;
■ s. In paragraph (p)(7) introductory text, revising Equation W–27, removing the definition of parameter ''$E_{s,i}$'' in Equation W–27, and adding in its place the definition of parameter ''$E_{s,i,m}$'';
■ t. In paragraph (p)(7)(i) introductory text, revising Equation W–28 and the definition of parameter ''m'', and removing the definition of parameter ''MT_m'', and adding in its place the definition of parameter ''$MT_{m,p}$'';
■ u. Revising paragraph (r)(2) introductory text;
■ v. Revising paragraph (r)(6)(ii) introductory text;
■ w. Revising paragraph (t) introductory text, paragraph (t)(1) introductory text, and the definition of parameters ''$E_{s,n}$'' and ''$E_{a,n}$'' in Equation W–33;

■ x. In paragraph (v), revising the definition of ''ρ_i'' in Equation W–36;

■ y. In paragraph (z)(2)(iii), removing the definition of ''E_{CO2}'' in Equations W–39A and W–39B, and adding in its place the definition of ''$E_{a,CO2}$'';

■ z. In paragraph (z)(2)(vi), revising the definition of parameter ''HHV'' in Equation W–40.

The addition and revisions read as follows:

§ 98.233 Calculating GHG emissions.

* * * * *

(e) * * *

(5) * * *

$$E_{s,n} = \frac{(H*D^2*P*P_2*\%G*N)}{(4*P_1*100)} \qquad \text{(Eq. W-6)}$$

Where:

$E_{s,n}$ = Annual natural gas emissions at standard conditions in cubic feet.

H = Height of the dehydrator vessel (ft).

D = Inside diameter of the vessel (ft).

P_1 = Atmospheric pressure (psia).

P_2 = Pressure of the gas (psia).

P = pi (3.14).

%G = Percent of packed vessel volume that is gas.

N = Number of dehydrator openings in the calendar year.

100 = Conversion of %G to fraction.

* * * * *

(f) * * *

(1) *Calculation Methodology 1.* For at least one well of each unique well tubing diameter group and pressure group combination in each sub-basin category (see § 98.238 for the definitions of tubing diameter group, pressure group, and sub-basin category), where gas wells are vented to the atmosphere to expel liquids accumulated in the tubing, a recording flow meter shall be installed on the vent line used to vent gas from the well (e.g., on the vent line off the wellhead separator or atmospheric storage tank) according to methods set forth in § 98.234(b). Calculate emissions from well venting for liquids unloading using Equation W–7 of this section.

$$E_{a,n} = \sum_{p=1}^{h} T_p FR \qquad \text{(Eq. W-7)}$$

* * * * *

T_p = Cumulative amount of time in hours of venting for each well, p, of the same tubing diameter group and pressure group combination in a sub-basin during the year.

FR = Average flow rate in cubic feet per hour for all measured wells venting for the duration of the liquids unloading, under actual conditions as determined in paragraph (f)(1)(i) of this section.

(i) Determine the well vent average flow rate as specified under paragraph (f)(1)(i) of this section for at least one well in a unique well tubing diameter group and pressure group combination in each sub-basin category.

(A) The average flow rate per hour of venting is calculated for each unique tubing diameter group and pressure group combination in each sub-basin category by dividing the recorded total flow by the recorded time (in hours) for all measured liquid unloading events with venting to the atmosphere.

* * * * *

(2) * * *

$$E_{s,n} = \sum_{p=1}^{W}\left[V_p \times \left(\left(0.37\times10^{-3}\right)\times CD_p^2 \times WD_p \times SP_p\right) + \sum_{q=1}^{V_p}\left(SFR_p \times \left(HR_{p,q} - 1.0\right)\times Z_{p,q}\right)\right] \qquad \text{(Eq. W-8)}$$

* * * * *

SP_p = For each well, p, shut-in pressure or surface pressure for wells with tubing production or casing pressure for each well with no packers in pounds per square inch absolute (psia); or casing-to-tubing pressure ratio of one well with no packer from the same sub-basin multiplied by the tubing pressure of each well, p, in the sub-basin, in pounds per square inch absolute (psia).

V_p = Number of unloading events per year per well, p.

* * * * *

$HR_{p,q}$ = Hours that each well, p, was left open to the atmosphere during each unloading event, q.

* * * * *

(3) *Calculation Methodology 3.* Calculate emissions from well venting to the atmosphere for liquids unloading with plunger lift assist using Equation W–9 of this section.

$$E_{s,n} = \sum_{p=1}^{W}\left[V_p \times \left(\left(0.37\times10^{-3}\right)\times TD_p^2 \times WD_p \times SP_p\right) + \sum_{q=1}^{V_p}\left(SFR_p \times \left(HR_{p,q} - 0.5\right)\times Z_{p,q}\right)\right] \qquad \text{(Eq. W-9)}$$

* * * * *

W = Total number of wells with plunger lift assist and well venting for liquids unloading for each sub-basin.

* * * * *

V_p = Number of unloading events per year for each well, p.

* * * * *

$HR_{p,q}$ = Hours that each well, p, was left open to the atmosphere during each unloading event, q.

* * * * *

(g) * * *

$$E_{s,n} = \sum_{p=1}^{W} \left[T_p \times FRM_s \times PR_{s,p} - EnF_{s,p} - SG_{s,p} \right] \quad \text{(Eq. W-10A)}$$

$$E_{s,n} = \sum_{p=1}^{W} \left[FV_{s,p} - EnF_{s,p} \right] \quad \text{(Eq. W-10B)}$$

* * * * *

FRM_s = Ratio of flowback during well completions and workovers from hydraulic fracturing to 30-day production rate from Equation W–12.

$PR_{s,p}$ = First 30-day average production flow rate in standard cubic feet per hour of each well p, as required in paragraph (g)(1) of this section.

$EnF_{s,p}$ = Volume of CO_2 or N_2 injected gas in cubic feet at standard conditions that was injected into the reservoir during an energized fracture job for each well p. If the fracture process did not inject gas into the reservoir, then $EnF_{s,p}$ is 0. If injected gas is CO_2 then $EnF_{s,p}$ is 0.

$SG_{s,p}$ = Volume of natural gas in cubic feet at standard conditions that was recovered into a flow-line for well p as per paragraph (g)(3) of this section. This parameter includes any natural gas that is injected into the well for clean-up. If no gas was recovered, $SG_{s,p}$ is 0.

$FV_{s,p}$ = Flow volume of each well (p) in standard cubic feet measured using a recording flow meter (digital or analog) on the vent line to measure flowback during the completion or workover according to methods set forth in § 98.234(b).

(1) The average flow rate for flowback during well completions and workovers from hydraulic fracturing shall be determined using measurement(s) for Calculation Methodology 1 or calculation(s) for Calculation Methodology 2 described in this paragraph (g)(1) of this section. If Equation W–10A is used, the number of measurements or calculations shall be determined per sub-basin and well type (horizontal or vertical) as follows: at least one measurement or calculation for less than or equal to 25 completions or workovers; at least two measurements or calculations for 26 to 50 completions or workovers; at least three measurements or calculations for 51 to 100 completions or workovers; at least four measurements or calculations for 101 to 250 completions or workovers; and at least five measurements or calculations for greater than 250 completions or workovers.

* * * * *

(ii) * * *

$$FR_a = 1.27 * 10^5 * A * \sqrt{3430 * T_u * \left[\left(\frac{P_2}{P_1} \right)^{1.515} - \left(\frac{P_2}{P_1} \right)^{1.758} \right]} \quad \text{(Eq. W-11A)}$$

Where:

FR_a = Average flow rate in cubic feet per hour, under actual subsonic flow conditions.

A = Cross sectional open area of the restriction orifice (m^2).

* * * * *

$$FR_a = 1.27 * 10^5 * A * \sqrt{187.08 * T_u} \quad \text{(Eq. W-11B)}$$

Where:

FR_a = Average flow rate in cubic feet per hour, under actual sonic flow conditions.

A = Cross sectional open area of the restriction orifice (m^2).

* * * * *

(iii) * * *

$$FRM_s = \frac{\sum_{p=1}^{N} FR_{s,p}}{\sum_{p=1}^{N} PR_{s,p}} \quad \text{(Eq. W-12)}$$

Where:

FRM_s = Ratio of flowback rate during well completions and workovers from hydraulic fracturing to 30-day production rate.

$FR_{s,p}$ = Measured flowback rate from Calculation Methodology 1 described in paragraph (g)(1)(i) of this section or calculated flow rate from Calculation Methodology 2 described in paragraph (g)(1)(ii) of this section in standard cubic feet per hour for well(s) p for each sub-basin and well type (horizontal or vertical) combination. Measured and calculated FR_a values shall be converted from actual conditions (FR_a) to standard conditions ($FR_{s,p}$) for each well p using Equation W–33 in paragraph (t) of this section. You may not use flow volume as used in Equation W–10B converted to a flow rate for this parameter.

$PR_{s,p}$ = First 30-day production rate in standard cubic feet per hour for each well p that was measured in the sub-basin and well type combination.

N = Number of measured or calculated well completions or workovers using hydraulic fracturing in a sub-basin and well type combination.

* * * * *

(3) * * *

(i) Use the factor $SG_{s,P}$ in Equation W–10A of this section, to adjust the emissions estimated in paragraphs (g)(1) through (g)(4) of this section by the magnitude of emissions captured using purpose designed equipment that separates saleable gas from the flowback as determined by engineering estimate based on best available data.

* * * * *

(h) * * *

* * * * *

$E_{s,n}$ = Annual natural gas emissions in standard cubic feet from gas well venting during well completions and workovers without hydraulic fracturing.

* * * * *

(i) * * *

(3) * * *

* * * * *

$E_{s,n}$ = Annual natural gas venting emissions at standard conditions from blowdowns in cubic feet.

* * * * *

$$E_{s,n} = \sum_{p=1}^{N}\left[V\left(\frac{(459.67+T_s)(P_{a,b,p}-P_{a,e,p})}{(459.67+T_{a,p})P_s}\right)\right] \quad \text{(Eq. W-14B)}$$

* * * * *

$T_{a,p}$ = Temperature at actual conditions in the unique physical volume (°F) for each blowdown ''p''.

* * * * *

(j) * * *

(5) *Calculation Methodology 5.* For well pad gas-liquid separators and for wells flowing off a well pad without passing through a gas-liquid separator with annual average daily throughput of oil less than 10 barrels per day use Equation W–15 of this section:

* * * * *

Count = Total number of separators or wells with annual average daily throughput less than 10 barrels per day. Count only separators or wells that feed oil directly to the storage tank.

1,000 = Conversion from thousand standard cubic feet to standard cubic feet.

* * * * *

(l) * * *

(3) * * *

* * * * *

PR = Average annual production rate in actual cubic feet per day for the gas well(s) being tested.

* * * * *

(o) * * *

(5) * * *

$$E_{s,i,m} = EF_m * T_m * GHG_i \quad \text{(Eq. W-23)}$$

* * * * *

$E_{s,i,m}$ = Annual total volumetric GHG emissions at standard conditions from each centrifugal compressor for mode-source combination m, in cubic feet.

* * * * *

(6) * * *

$$EF_m = \frac{\sum_{p=1}^{Count_m} MT_{m,p}}{Count_m} \quad \text{(Eq. W-24)}$$

* * * * *

$MT_{m,p}$ = Flow measurements from all centrifugal compressor sources in each mode-source combination, m, for each measured compressor, p, in standard cubic feet per hour.

m = Compressor mode-source combination as listed in paragraphs (o)(1)(i) through (o)(1)(iii).

* * * * *

(7) * * *

Where:

EF_i = Emission factor for GHG_i. Use 1.2×10^7 standard cubic feet per year per compressor for CH_4 and 5.30×10^5 standard cubic feet per year per compressor for CO_2 at 60 °F and 14.7 psia.

* * * * *

(p) * * *

(7) * * *

$$E_{s,i,m} = EF_m * T_m * GHG_i \quad \text{(Eq. W-27)}$$

* * * * *

$E_{s,i,m}$ = Annual total volumetric GHG emissions at standard conditions from each reciprocating compressor for mode-source combination m, in cubic feet.

(i) * * *

$$EF_m = \frac{\sum_{p=1}^{Count_m} MT_{m,p}}{Count_m} \quad \text{(Eq. W-28)}$$

* * * * *

$MT_{m,p}$ = Flow measurements from all reciprocating compressor sources in each mode-source combination, m, for each measured compressor, p, in standard cubic feet per hour.

m = Compressor mode-source combination as listed in (p)(1) through (p)(3).

* * * * *

(r) * * *

(2) Onshore petroleum and natural gas production facilities shall use the appropriate default population emission factors listed in Table W–1A of this subpart for equipment leaks from valves, connectors, open ended lines, pressure relief valves, pump, flanges, and other. Major equipment and components associated with gas wells are considered gas service components in reference to Table W–1A of this subpart and major natural gas equipment in reference to Table W–1B of this subpart. Major equipment and components associated with crude oil wells are considered crude service components in reference to Table W–1A of this subpart and major crude oil equipment in reference to Table W–1C of this subpart. Where facilities conduct EOR operations the emissions factor listed in Table W–1A of this subpart

shall be used to estimate all streams of gases, including recycle CO_2 stream. The component count can be determined using either of the methodologies described in this paragraph (r)(2). The same methodology must be used for the entire calendar year.

* * * * *

(6) * * *

(ii) Emissions from all above grade metering-regulating stations (including above grade TD transfer stations) shall be calculated by applying the emission factor calculated in Equation W–32 and the total count of meter/regulator runs at all above grade metering-regulating stations (inclusive of TD transfer stations) to Equation W–31. The facility wide emission factor in Equation W–32 will be calculated by using the total volumetric GHG emissions at standard conditions for all equipment leak sources calculated in Equation W–30B in paragraph (q)(8) of this section and the count of meter/regulator runs located at above grade transmission-distribution transfer stations that were monitored over the years that constitute one complete cycle as per paragraph (q)(8)(i) of this section. A meter on a regulator run is considered one meter/regulator run. Reporters that do not have above grade T–D transfer stations shall report a count of above grade metering-regulating stations only and do not have to comply with § 98.236(c)(16)(xix).

* * * * *

(t) *Volumetric emissions.* If equation parameters in § 98.233 are already at standard conditions, which results in volumetric emissions at standard conditions, then this paragraph does not apply. Calculate volumetric emissions at standard conditions as specified in paragraphs (t)(1) or (2) of this section, with actual pressure and temperature determined by engineering estimates based on best available data unless otherwise specified.

(1) Calculate natural gas volumetric emissions at standard conditions using actual natural gas emission temperature and pressure, and Equation W–33 of this section for conversions of $E_{a,n}$ or conversions of FR_a (whether sub-sonic or sonic).

* * * * *

$E_{s,n}$ = Natural gas volumetric emissions at standard temperature and pressure (STP) conditions in cubic feet, except $E_{s,n}$ equals $FR_{s,p}$ for each well p when calculating either subsonic or sonic flowrates under 98.233(g).

$E_{a,n}$ = Natural gas volumetric emissions at actual conditions in cubic feet, except $E_{a,n}$ equals $FR_{a,p}$ for each well p when calculating either subsonic or sonic flowrates under 98.233(g).

* * * * *

(v) * * *

* * * * *

P_i = Density of GHG_i. Use 0.0526 kg/ft³ for CO_2 and N_2O, and 0.0192 kg/ft³ for CH_4 at 60°F and 14.7 psia.

* * * * *

(z) * * *

(2) * * *

(iii) * * *

* * * * *

$E_{a,CO2}$ = Contribution of annual CO_2 emissions from portable or stationary fuel combustion sources in cubic feet, under actual conditions.

* * * * *

(vi) * * *

* * * * *

HHV = For the higher heating value for field gas or process vent gas, use 1.235×10^{-3} mmBtu/scf for HHV.

* * * * *

■ 8. Section 98.236 is amended by:

■ a. Revising paragraph (c)(5)(ii)(D).

■ b. Revising paragraph (c)(9) introductory text.

■ c. Revising paragraphs (c)(13)(i)(G), (c)(13)(ii)(C), (c)(13)(iii)(C), (c)(13)(iv), and (c)(13)(v)(B).

■ d. Revising paragraphs (c)(14)(i)(C), (c)(14)(ii)(C), (c)(14)(iii)(C), (c)(14)(iv), and (c)(14)(v)(B).

■ e. Revising paragraphs (c)(15)(i)(B), (c)(15)(i)(C), and (c)(15)(ii)(A).

■ f. Revising paragraph (c)(17)(v). The revisions read as follows:

§ 98.236 Data reporting requirements.

* * * * *

(c) * * *

(5) * * *

(ii) * * *

(D) Average internal casing diameter, in inches, for all wells, where applicable.

* * * * *

(9) For transmission tank emissions identified in § 98.233(k) from scrubber dump valves report the following:

* * * * *

(13) * * *

(i) * * *

(G) Report seal oil degassing vent emissions for compressors measured and for compressors not measured in metric tons of CO_2e for each gas.

(ii) * * *

(C) Report blowdown vent emissions when in operating mode in metric tons of CO_2e for each gas.

(iii) * * *

(C) Report the isolation valve leakage emissions in not operating, depressurized mode in metric tons of CO_2e for each gas.

(iv) Report total annual compressor emissions from all modes of operation in metric tons of CO_2e for each gas.

(v) * * *

(B) Report annual emissions in metric tons of CO_2e for each gas (refer to Equation W–25 of § 98.233) collectively.

(14) * * *

(i) * * *

(C) Report rod packing emissions for compressors measured and for compressors not measured in metric tons of CO_2e for each gas.

(ii) * * *

(C) Report blowdown vent emissions when in operating and standby pressurized modes in metric tons of CO_2e for each gas.

(iii) * * *

(C) Report isolation valve leakage emissions in not operating, depressurized mode in metric tons of CO_2e for each gas.

(iv) Report total annual compressor emissions from all modes of operation in metric tons of CO_2e for each gas.

(v) * * *

(B) Report annual emissions in metric tons of CO_2e for each gas collectively (refer to Equation W–29 of § 98.233).

(15) * * *

(i) * * *

(B) For onshore natural gas processing, range of concentrations of CH_4 and CO_2 (refer to Equation W–30A of § 98.233).

(C) Annual CO_2 and CH_4 emissions in metric tons CO_2e for each gas (refer to Equation W–30A of § 98.233), by component type.

(ii) * * *

(A) For source categories § 98.230(a)(5), (a)(6), and (a)(7), total count for each component type in Tables W–4, W–5, and W–6 of this subpart for which there is a population emission factor, listed by major heading and component type.

* * * * *

(17) * * *

(v) For each EOR pump, report annual CO_2 emissions, expressed in metric tons CO_2e for each gas.

* * * * *

■ 9. Revise Table A–1A of Subpart W of part 98 to read as follows:

TABLE A–1A OF SUBPART W—DEFAULT WHOLE GAS EMISSION FACTORS FOR ONSHORE PETROLEUM AND NATURAL GAS PRODUCTION

Onshore petroleum and natural gas production	Emission factor (scf/hour/component)
Eastern U.S.	
Population Emission Factors—All Components, Gas Service [1]	
Valve	0.027
Connector	0.003
Open-ended Line	0.061
Pressure Relief Valve	0.040
Low Continuous Bleed Pneumatic Device Vents [2]	1.39
High Continuous Bleed Pneumatic Device Vents [2]	37.3
Intermittent Bleed Pneumatic Device Vents [2]	13.5
Pneumatic Pumps [3]	13.3
Population Emission Factors—All Components, Light Crude Service [4]	
Valve	0.05
Flange	0.003
Connector	0.007
Open-ended Line	0.05
Pump	0.01
Other [5]	0.30
Population Emission Factors—All Components, Heavy Crude Service [6]	
Valve	0.0005
Flange	0.0009
Connector (other)	0.0003
Open-ended Line	0.006
Other [5]	0.003
Western U.S.	
Population Emission Factors—All Components, Gas Service [1]	
Valve	0.121
Connector	0.017
Open-ended Line	0.031
Pressure Relief Valve	0.193
Low Continuous Bleed Pneumatic Device Vents [2]	1.39
High Continuous Bleed Pneumatic Device Vents [2]	37.3
Intermittent Bleed Pneumatic Device Vents [2]	13.5
Pneumatic Pumps [3]	13.3

TABLE A–1A OF SUBPART W—DEFAULT WHOLE GAS EMISSION FACTORS FOR ONSHORE PETROLEUM AND NATURAL GAS PRODUCTION—Continued

Onshore petroleum and natural gas production	Emission factor (scf/hour/component)
Population Emission Factors—All Components, Light Crude Service [4]	
Valve	0.05
Flange	0.003
Connector (other)	0.007
Open-ended Line	0.05
Pump	0.01
Other [5]	0.30
Population Emission Factors—All Components, Heavy Crude Service [6]	
Valve	0.0005
Flange	0.0009
Connector (other)	0.0003
Open-ended Line	0.006
Other [5]	0.003

[1] For multi-phase flow that includes gas, use the gas service emissions factors.
[2] Emission Factor is in units of "scf/hour/device."
[3] Emission Factor is in units of "scf/hour/pump."
[4] Hydrocarbon liquids greater than or equal to 20°API are considered "light crude."
[5] "Others" category includes instruments, loading arms, pressure relief valves, stuffing boxes, compressor seals, dump lever arms, and vents.
[6] Hydrocarbon liquids less than 20°API are considered "heavy crude."

■ 10. Amend Table W–5 of Subpart W of part 98 by revising the entry for "Vapor Recovery Compressor" to read as follows:

TABLE W–5 OF SUBPART W—DEFAULT METHANE EMISSION FACTORS FOR LIQUEFIED NATURAL GAS (LNG) STORAGE

LNG Storage	Emission factor (scf/hour/component)
* * * * *	
Vapor Recovery Compressor [2]	4.17

TABLE W–5 OF SUBPART W—DEFAULT METHANE EMISSION FACTORS FOR LIQUEFIED NATURAL GAS (LNG) STORAGE—Continued

LNG Storage	Emission factor (scf/hour/component)
* * * * *	

[2] Emission Factor is in units of "scf/hour/device."

* * * * *

Subpart TT—[Amended]

■ 11. Amend § 98.460 by adding paragraph (c)(2)(xiii) to read as follows:

§ 98.460 Definition of source category.

* * * * *

(c) * * *

(2) * * *

(xiii) Other waste material that has a DOC value of 0.3 weight percent (on a wet basis) or less. DOC value must be determined using a 60-day anaerobic biodegradation test procedure identified in § 98.464(b)(4)(i)(A).

* * * * *

■ 12. Section 98.464(b) is revised to read as follows:

§ 98.464 Monitoring and QA/QVC requirements.

* * * * *

(b) For each waste stream placed in the landfill during the reporting year for which you choose to determine volatile solids concentration for the purposes of § 98.460(c)(2)(xii) or choose to determine a landfill-specific DOCx for use in Equation TT–1 of this subpart or for the purposes of § 98.460(c)(2)(xiii) of this subpart, you must collect and test a representative sample of that waste stream using the methods specified in paragraphs (b)(1) through (b)(4) of this section.

* * * * *

[FR Doc. 2012–19957 Filed 8–23–12; 8:45 am]

BILLING CODE 6560–50–P

Proposed Rules

Federal Register
Vol. 77, No. 165
Friday, August 24, 2012

This section of the FEDERAL REGISTER contains notices to the public of the proposed issuance of rules and regulations. The purpose of these notices is to give interested persons an opportunity to participate in the rule making prior to the adoption of the final rules.

DEPARTMENT OF THE TREASURY

Internal Revenue Service

26 CFR Part 1

[REG–113738–12]

RIN 1545–BK94

Amendment of Prohibited Payment Option Under Single-Employer Defined Benefit Plan of Plan Sponsor in Bankruptcy; Hearing Cancellation

AGENCY: Internal Revenue Service (IRS), Treasury.

ACTION: Cancellation of notice of public hearing on proposed rulemaking.

SUMMARY: This document cancels a public hearing on proposed regulations under section 411(d)(6) of the Internal Revenue Code. The proposed regulations provide guidance under the anti-cutback rules of section 411(d)(6) of the Internal Revenue Code, which generally prohibit plan amendments eliminating or reducing accrued benefits, early retirement benefits, retirement-type subsidies, and optional forms of benefit under qualified retirement plans.

DATES: The public hearing, originally scheduled for August 24, 2012 at 10 a.m. is cancelled.

FOR FURTHER INFORMATION CONTACT: Oluwafunmilayo Taylor of the Publications and Regulations Branch, Legal Processing Division, Associate Chief Counsel (Procedure and Administration) at (202) 622–7180 (not a toll-free number).

SUPPLEMENTARY INFORMATION: A notice of proposed rulemaking and a notice of public hearing that appeared in the **Federal Register** on Thursday, June 21, 2012 (77 FR 37349) announced that a public hearing was scheduled for August 24, 2012, at 10 a.m. in the IRS Auditorium, Internal Revenue Building, 1111 Constitution Avenue NW., Washington, DC. The subject of the public hearing was under the sections 411(d)(6) of the Internal Revenue Code.

The public comment period for these regulations expired on August 16, 2012. The notice of proposed rulemaking and notice of public hearing instructed those interested in testifying at the public hearing to submit a request to speak and an outline of the topics to be addressed. The public hearing scheduled for August 24, 2012, is cancelled.

LaNita VanDyke,

Chief, Publications and Regulations Branch, Legal Processing Division, Associate Chief Counsel, (Procedure and Administration).

[FR Doc. 2012–20995 Filed 8–22–12; 4:15 pm]

BILLING CODE 4830–01–P

DEPARTMENT OF DEFENSE

GENERAL SERVICES ADMINISTRATION

NATIONAL AERONAUTICS AND SPACE ADMINISTRATION

48 CFR Parts 4, 7, 12, 42, and 52

[FAR Case 2011–020; Docket 2011–0020; Sequence 1]

RIN 9000–AM19

Federal Acquisition Regulation; Basic Safeguarding of Contractor Information Systems

AGENCY: Department of Defense (DoD), General Services Administration (GSA), and National Aeronautics and Space Administration (NASA).

ACTION: Proposed rule.

SUMMARY: DoD, GSA, and NASA are proposing to amend the Federal Acquisition Regulation (FAR) to add a new subpart and contract clause for the basic safeguarding of contractor information systems that contain information provided by or generated for the Government (other than public information) that will be resident on or transiting through contractor information systems.

DATES: Interested parties should submit written comments to the Regulatory Secretariat at one of the addressees shown below on or before October 23, 2012 to be considered in the formation of the final rule.

ADDRESSES: Submit comments in response to FAR Case 2011–020 by any of the following methods:

- *Regulations.gov: http://www.regulations.gov.* Submit comments via the Federal eRulemaking portal by searching for ''FAR Case 2011–020.'' Select the link ''Submit a Comment'' that corresponds with ''FAR Case 2011–020.'' Follow the instructions provided at the ''Submit a Comment'' screen. Please include your name, company name (if any), and ''FAR Case 2011–020'' on your attached document.
- *Fax:* 202–501–4067.
- *Mail:* General Services Administration (MVCB), ATTN: Hada Flowers, 1275 First Street NE., 7th Floor, Washington, DC 20417.

Instructions: Please submit comments only and cite FAR Case 2011–020, in all correspondence related to this case. All comments received will be posted without change to *http://www.regulations.gov,* including any personal and/or business confidential information provided.

FOR FURTHER INFORMATION CONTACT: Ms. Patricia Corrigan, Procurement Analyst, at 202–208–1963, for clarification of content. For information pertaining to status or publication schedules, contact the Regulatory Secretariat at 202–501–4755. Please cite FAR Case 2011–020.

SUPPLEMENTARY INFORMATION:

I. Background

The FAR presently does not specifically address the safeguarding of contractor information systems that contain or process information provided by or generated for the Government (other than public information). DoD published an Advance Notice of Proposed Rulemaking (ANPR) and notice of public meeting in the **Federal Register** at 75 FR 9563 on March 3, 2010, under Defense Federal Acquisition Regulation Supplement (DFARS) Case 2008–D028, Safeguarding Unclassified Information. The ANPR addressed basic and enhanced safeguarding procedures for the protection of DoD unclassified information. Basic protection measures are first-level information technology security measures used to deter unauthorized disclosure, loss, or compromise. The ANPR also addressed enhanced information protection measures that included requirements for encryption and network intrusion protection.

Resulting public comments of the DFARS rule were considered in drafting a proposed FAR rule under FAR case

2009–030, which focused on the basic safeguarding of unclassified Government information within contractor information systems. The Councils agreed to the draft proposed FAR rule, but it was not published. On June 29, 2011, the contents of FAR case 2009–030 were rolled into FAR case 2011–020, which is not limited to a single category of Government information, *e.g.,* unclassified.

This proposed FAR rule would add a contract clause to address requirements for the basic safeguarding of contractor information systems that contain or process information provided by or generated for the Government (other than public information). DoD, GSA, and NASA concluded that these requirements are an extension of the requirements, under the Federal Information Security Management Act (FISMA) of 2002, for Federal agencies to provide information security for information and information systems that support the operations and assets of the agency, including those managed by contractors. 44 U.S.C. 3544(a)(1)(A)(ii) describes Federal agency security responsibilities as including ''information systems used or operated by an agency or by a contractor of an agency or other organization on behalf of an agency.'' The safeguarding measures would not apply to public information as defined at 44 U.S.C. 3502.

II. Proposed Rule

The proposed FAR changes would add a new subpart at 4.17, Basic Safeguarding of Contractor Information Systems. The other FAR changes include the following:

- Definitions at FAR 4.1701, for ''information'' derived from the Committee on National Security Systems Instruction 4009, April 26, 2010, and ''information system'' and ''public information'' from 44 U.S.C. 3502;
- Applicability at FAR 4.1702, which applies the rule to commercial items and commercial-off-the-shelf items when a contractor's information system contains information provided by or generated for the Government (other than public information) that will be resident on or transiting through contractor information systems. It also may be applied under the simplified acquisition threshold when the contracting officer determines that inclusion of the clause is appropriate.
- Applicability added to FAR 12.301, Solicitation provisions and contract clauses for the acquisition of commercial items;
- A clause at FAR 52.204–XX, Basic Safeguarding of Contractor Information Systems, which requires the contractor to provide protective measures to information provided by or generated for the Government (other than public information) that will be resident on or transiting through contractor information systems in the following areas:
  - Public computers or Web sites.
  - Transmitting electronic information.
  - Transmitting voice and fax information.
  - Physical and electronic barriers.
  - Sanitization.
  - Intrusion protection.
  - Transfer limitations.
- Conforming changes were made at FAR subparts 7.1, Acquisition Plans and 42.3, Contract Administration Office Functions.

The proposed FAR changes address only basic requirements for the safeguarding of contractor information systems, and may be altered as necessary to align with any future direction given in response to ongoing efforts led by the National Archives and Records Administration in the implementation of Executive Order 13556 of November 4, 2010, ''Controlled Unclassified Information,'' published in the **Federal Register** at 75 FR 68675, on November 9, 2010. Further, the clause prescribed in the proposed rule is not intended to implement any other, more specific safeguarding requirements, or to conflict with any contract clauses or requirements that specifically address the safeguarding of information or information systems. If any restrictions or authorizations in this clause are inconsistent with a requirement of any other clause in a contract, the requirement of the other clause shall take precedence over the requirement of the clause at FAR 52.204–XX.

There are other pending rules that are related to this rule, but this rule does not duplicate, overlap, or conflict with the other rules. The other FAR rules are as follows:

- FAR Case 2011–001, Organizational Conflict of Interest and Contractor Access to Nonpublic Information; and
- FAR Case 2011–010, Sharing Cyber Threat Information.

The status of DFARS and FAR cases can be tracked at *http://www.acq.osd.mil/dpap/dars/case_status.html.*

II. Executive Order 12866 and 13563

Executive Orders (E.O.s) 12866 and 13563 direct agencies to assess all costs and benefits of available regulatory alternatives and, if regulation is necessary, to select regulatory approaches that maximize net benefits (including potential economic, environmental, public health and safety effects, distributive impacts, and equity). E.O. 13563 emphasizes the importance of quantifying both costs and benefits, of reducing costs, of harmonizing rules, and of promoting flexibility. This is a significant regulatory action and, therefore, was subject to review under section 6(b) of Executive Order 12866, Regulatory Planning and Review, dated September 30, 1993. This rule is not a major rule under 5 U.S.C. 804.

III. Regulatory Flexibility Act

The change may have a significant economic impact on a substantial number of small entities within the meaning of the Regulatory Flexibility Act 5 U.S.C. 601, *et seq.* The Initial Regulatory Flexibility Analysis (IRFA) is summarized as follows:

This action is being implemented to revise the Federal Acquisition Regulation (FAR) to protect against the compromise of contractor computer networks on which information provided by or generated for the Government (other than public information) that will be resident on or transiting through contractor information systems.

The objective of this rule is to improve the protection of information provided by or generated for the Government (other than public information) that will be resident on or transiting through contractor information systems by employing basic security measures, as identified in the clause to appropriately protect information provided by or generated for the Government (other than public information) that will be resident on or transiting through contractor information systems from unauthorized disclosure, loss, or compromise.

This proposed rule applies to all Federal contractors and appropriate subcontractors regardless of size or business ownership. The resultant cost impact is considered not significant, since the first-level protective measures (*i.e.,* updated virus protection, the latest security software patches, etc.) are typically employed as part of the routine course of doing business. It is recognized that the cost of not using basic information technology system protection measures would be a significant detriment to contractor and Government business, resulting in reduced system performance and the potential loss of valuable information. It is also recognized that prudent business practices designed to protect an information technology system are typically a common part of everyday operations. As a result, the benefit of securely receiving and processing information provided by or generated for the Government (other than public information) that will be resident on or transiting through contractor information systems offers substantial value to contractors and the Government by reducing vulnerabilities to contractor systems by keeping information

provided by or generated for the Government (other than public information) that will be resident on or transiting through contractor information systems safe.

There are no known significant alternatives to the rule that would further minimize any economic impact of the rule on small entities.

The Regulatory Secretariat will be submitting a copy of the Initial Regulatory Flexibility Analysis (IRFA) to the Chief Counsel for Advocacy of the Small Business Administration. A copy of the IRFA may be obtained from the Regulatory Secretariat. The Councils invite comments from small business concerns and other interested parties on the expected impact of this rule on small entities.

DoD, GSA, and NASA will also consider comments from small entities concerning the existing regulations in subparts affected by this rule in accordance with 5 U.S.C. 610. Interested parties must submit such comments separately and should cite 5 U.S.C. 610 (FAR Case 2011–020) in correspondence.

IV. Paperwork Reduction Act

The proposed rule does not contain any information collection requirements that require the approval of the Office of Management and Budget under the Paperwork Reduction Act (44 U.S.C. chapter 35).

List of Subjects in 48 CFR Parts 4, 7, 12, 42, and 52

Government procurement.

Dated: August 17, 2012.

Laura Auletta,

Director, Office of Governmentwide Acquisition Policy, Office of Acquisition Policy, Office of Governmentwide Policy.

Therefore, DoD, GSA, and NASA propose amending 48 CFR parts 4, 7, 12, 42, and 52 as set forth below:

1. The authority citation for 48 CFR parts 4, 7, 12, 42, and 52 are revised to read as follows:

Authority: 40 U.S.C. 121(c); 10 U.S.C. chapter 137; and 51 U.S.C. 20113.

PART 4—ADMINISTRATIVE MATTERS

2. Add Subpart 4.17 to read as follows.

Subpart 4.17—Basic Safeguarding of Contractor Information Systems

Sec.

4.1700 Scope of subpart.
4.1701 Definitions.
4.1702 Applicability.
4.1703 Solicitation provision and contract clause.

Subpart 4.17—Basic Safeguarding of Contractor Information Systems

4.1700 Scope of subpart.

This subpart prescribes policies and procedures for safeguarding information provided by or generated for the Government (other than public information) that will be resident on or transiting through contractor information systems.

4.1701 Definitions.

As used in this subpart—

Information means any communication or representation of knowledge such as facts, data, or opinions in any medium or form, including textual, numerical, graphic, cartographic, narrative, or audiovisual.

Information system means a discrete set of information resources organized for the collection, processing, maintenance, use, sharing, dissemination, or disposition of information (44 U.S.C. 3502).

Public information means any information, regardless of form or format, that an agency discloses, disseminates, or makes available to the public (44 U.S.C. 3502).

Safeguarding means measures or controls that are prescribed to protect information.

4.1702 Applicability.

This subpart applies to all solicitations, contracts (including orders and those for commercial items and commercially available off-the-shelf items), when a contractor's information system may contain information provided by or generated for the Government (other than public information).

4.1703 Solicitation provision and contract clause.

Use the clause at 52.204–XX, Basic Safeguarding of Contractor Information Systems, in solicitations and contracts above the simplified acquisition threshold when the contractor or a subcontractor at any tier may have information residing in or transiting through its information system, where such information is provided by or generated for the Government (other than public information). The clause may also be used in contracts below the simplified acquisition threshold when the contracting officer determines that inclusion of the clause is appropriate.

PART 7—ACQUISITION PLANNING

3. Amend section 7.105 by revising paragraph (b)(18) to read as follows.

7.105 Contents of written acquisition plans.

* * * * *

(b) * * *

(18) *Security considerations.*

(i) For acquisitions dealing with classified matters, discuss how adequate security will be established, maintained, and monitored (see subpart 4.4).

(ii) For information technology acquisitions, discuss how agency information security requirements will be met.

(iii) For acquisitions requiring routine contractor physical access to a Federally-controlled facility and/or routine access to a Federally controlled information system, discuss how agency requirements for personal identity verification of contractors will be met (see subpart 4.13).

(iv) For acquisitions that may require information provided by or generated for the Government (other than public information) to reside on or transit through contractor information systems, discuss how this information will be protected (see subpart 4.17).

* * * * *

PART 12—ACQUISITION OF COMMERCIAL ITEMS

4. Amend section 12.301 by redesignating paragraph (d)(2) as paragraph (d)(4), and adding a new paragraph (d)(2) to read as follows:

12.301 Solicitation provisions and contract clauses for the acquisition of commercial items.

* * * * *

(d) * * *

(2) Insert the clause at 52.204–XX, Basic Safeguarding of Contractor Information Systems, in solicitations and contracts, as prescribed in 4.1703.

* * * * *

PART 42—CONTRACT MANAGEMENT

5. Amend section 42.302 by redesignating paragraphs (a)(21) through (a)(71) as paragraphs (a)(22) through (a)(72); and adding a new paragraph (a)(21) to read as follows.

42.302 Contract administration functions.

(a) * * *

(21) Ensure that the contractor has protective measures in place, consistent with the requirements of the clause at 52.204–XX.

* * * * *

PART 52—SOLICITATION PROVISIONS AND CONTRACT CLAUSES

6. Add section 52.204–XX to read as follows:

52.204–XX Basic Safeguarding of Contractor Information Systems.

As prescribed in 4.1703, use the following clause:

Basic Safeguarding of Contractor Information Systems (Date)

(a) *Definitions.* As used in this clause—

Clearing means removal of data from an information system, its storage devices, and other peripheral devices with storage capacity, in such a way that the data may not be reconstructed using common system capabilities (*i.e.,* through the keyboard); however, the data may be reconstructed using laboratory methods.

Compromise means disclosure of information to unauthorized persons, or a violation of the security policy of a system in which unauthorized intentional or unintentional disclosure, modification, destruction, or loss of an object may have occurred. This includes copying the data through covert network channels or the copying of data to unauthorized media.

Data means a subset of information in an electronic format that allows it to be retrieved or transmitted.

Information means any communication or representation of knowledge such as facts, data, or opinions, in any medium or form, including textual, numerical, graphic, cartographic, narrative, or audiovisual.

Information system means a discrete set of information resources organized for the collection, processing, maintenance, use, sharing, dissemination, or disposition of information (44 U.S.C. 3502).

Intrusion means an unauthorized act of bypassing the security mechanisms of a system.

Media means physical devices or writing surfaces including but not limited to magnetic tapes, optical disks, magnetic disks, large scale integration memory chips, and printouts (but not including display media, *e.g.,* a computer monitor, cathode ray tube (CRT) or other (transient) visual output) onto which information is recorded, stored, or printed within an information system.

Public information means any information, regardless of form or format, that an agency discloses, disseminates, or makes available to the public (44 U.S.C. 3502).

Safeguarding means measures or controls that are prescribed to protect information.

Voice means all oral information regardless of transmission protocol.

(b) *Safeguarding requirements and procedures.* The Contractor shall apply the following basic safeguarding requirements to protect information provided by or generated for the Government (other than public information) which resides on or transits through its information systems from unauthorized access and disclosure:

(1) *Protecting information on public computers or Web sites:* Do not process information provided by or generated for the Government (other than public information) on public computers (*e.g.,* those available for use by the general public in kiosks, hotel business centers) or computers that do not have access control. Information provided by or generated for the Government (other than public information) shall not be posted on Web sites that are publicly available or have access limited only by domain/Internet Protocol restriction. Such information may be posted to web pages that control access by user ID/password, user certificates, or other technical means, and that provide protection via use of security technologies. Access control may be provided by the intranet (versus the Web site itself or the application it hosts).

(2) *Transmitting electronic information.* Transmit email, text messages, blogs, and similar communications that contain information provided by or generated for the Government (other than public information), using technology and processes that provide the best level of security and privacy available, given facilities, conditions, and environment.

(3) *Transmitting voice and fax information.* Transmit information provided by or generated for the Government (other than public information), via voice and fax only when the sender has a reasonable assurance that access is limited to authorized recipients.

(4) *Physical and electronic barriers.* Protect information provided by or generated for the Government (other than public information), by at least one physical and one electronic barrier (*e.g.,* locked container or room, login and password) when not under direct individual control.

(5) *Sanitization.* At a minimum, clear information on media that have been used to process information provided by or generated for the Government (other than public information), before external release or disposal. Overwriting is an acceptable means of clearing media in accordance with National Institute of Standards and Technology 800–88, Guidelines for Media Sanitization, at *http://csrc.nist.gov/publications/nistpubs/800-88/NISTSP800-88_rev1.pdf.*

(6) *Intrusion protection.* Provide at a minimum the following protections against computer intrusions and data compromise:

(i) Current and regularly updated malware protection services, *e.g.,* anti-virus, anti-spyware.

(ii) Prompt application of security-relevant software upgrades, *e.g.,* patches, service-packs, and hot fixes.

(7) *Transfer limitations.* Transfer information provided by or generated for the Government (other than public information), only to those subcontractors that both require the information for purposes of contract performance and provide at least the same level of security as specified in this clause.

(c) *Subcontracts.* The Contractor shall include the substance of this clause, including this paragraph (c), in all subcontracts under this contract that may have information residing in or transiting through its information system, where such is provided by or generated for the Government (other than public information).

(d) *Other contractual requirements regarding the safeguarding of information.* This clause addresses basic requirements, and is subordinate to any other contract clauses or requirements that specifically address the safeguarding of information or information systems. If any restrictions or authorizations in this clause are inconsistent with a requirement of any other such clause in this contract, the requirement of the other clause shall take precedence over the requirement of this clause.

[FR Doc. 2012–20881 Filed 8–23–12; 8:45 am]

BILLING CODE 6820–EP–P

DEPARTMENT OF TRANSPORTATION

National Highway Traffic Safety Administration

49 CFR Part 535

[NHTSA 2012–0126]

RIN 2127–AK74

Greenhouse Gas Emissions Standards and Fuel Efficiency Standards for Medium- and Heavy-Duty Engines and Vehicles

AGENCY: National Highway Traffic Safety Administration (NHTSA), DOT.

ACTION: Denial of petition for rulemaking.

SUMMARY: The National Highway Traffic Administration (NHTSA) is denying the petition of Plant Oil Powered Diesel Fuel Systems, Inc. (''POP Diesel'') to amend the final rules establishing fuel efficiency standards for medium- and heavy-duty vehicles. NHTSA does not believe that POP Diesel has set forth a basis for rulemaking. The agency disagrees with the petitioner's assertion that a failure to specifically consider pure vegetable oil, and technology to enable its usage, as a feasible technology in heavy-duty vehicles, led to the adoption of less stringent standards. NHTSA also disagrees with POP's assertion that the agency failed to adequately consider the rebound effect in setting the standards.

FOR FURTHER INFORMATION CONTACT:

For Non-Legal Issues: James Tamm, Office of Rulemaking, National Highway Traffic Safety Administration, 1200 New Jersey Ave. SE., Washington, DC 20590, Telephone (202) 493–0515.

For Legal Issues: Lily Smith, Office of Chief Counsel, National Highway Traffic Safety Administration, 1200 New Jersey Ave. SE., Washington, DC 20590, Telephone: (202) 366–2992.

SUPPLEMENTARY INFORMATION:

I. Background

On September 15, 2011, NHTSA issued a final rule creating fuel efficiency standards for medium- and heavy-duty vehicles (''heavy-duty rule'') (76 FR 57106).

II. The Petition

NHTSA received two petitions from POP Diesel. The first petition was dated November 15, 2011, and was received by the agency shortly thereafter. The second petition was dated February 12, 2012, and was received by the agency on February 27, 2012. Both petitions from POP Diesel were styled as petitions for reconsideration of the heavy-duty rule. Under 49 CFR part 553, a petition for reconsideration must be received within 45 days of the publication of a final rule; a petition received after that date is considered to be a petition for issuance, amendment or revocation of a rule under 49 CFR part 552, *i.e.,* as a petition for rulemaking. As both petitions were received more than 45 days after the final rule was published, they were considered by the agency as petitions for rulemaking under part 552. Based on the agency's review of the February 27 petition, the agency concluded that it contained sufficient original material to fully supplant (as opposed to simply amend) the November 15 petition. Therefore, this document responds to the February 27 petition (''POP Diesel Petition'') according to the process prescribed in 49 CFR part 552.

In its petition, POP Diesel argued that NHTSA did not specifically consider pure vegetable oil, and POP Diesel's proprietary technology to enable its usage, as a feasible technology in medium- and heavy-duty vehicles. POP Diesel claimed that this, as well as a failure to consider the rebound effect,[1] led to the adoption of significantly less stringent standards and could encourage more fossil fuel consumption.

POP Diesel made the following specific arguments in support of its request for amending the standards:

1. The standards should have considered GHG emissions on a life-cycle basis, rather than focusing on tailpipe GHG emissions only. If the agencies had considered life-cycle GHG emissions, they would have apportioned credits to certain technologies and fuels differently.

2. The standards did not take into account technology which POP Diesel designs, engineers, manufacturers, and sells, which would enable a diesel engine to operate on pure vegetable oil fuel, and if they had, the agencies could have considered an alternative regulatory approach of imposing a ''manufacturer GHG emissions average, like the corporate average fuel economy standards in place for light duty vehicles.'' [2]

3. The standards do not accomplish their purpose of reducing greenhouse gas (GHG) emissions because the GHG standards fundamentally regulate fuel efficiency, and increasing fuel efficiency creates a ''rebound effect,'' which the agencies did not adequately consider as part of their final rule analysis.

To address these concerns, POP Diesel specifically requested that the agency revise the final standards by doing the following:

A. ''De-couple fuel efficiency policy from GHG emissions policy;''

B. ''Impose a corporate fleet average for GHG emissions on all classes of manufacturers of engines and vehicles as the most effective way to ramp down such emissions across the medium- and heavy-duty market.'' [3]

C. Re-evaluate ''the weight the Agencies give to various alternative technologies and fuels according to a [life-cycle] approach;''

D. Revise its analysis of the impact of the standards, in terms of GHG emissions, due to the ''rebound effect,'' given information presented by POP Diesel;

E. ''Recognize 100 percent plant oil as a viable renewable diesel engine fuel eligible to receive Renewable Identification Number ('RIN') credits under the Renewable Fuels 2 standard;''

F. ''Grant POP Diesel's application for a RIN pathway for 100 percent plant oil derived from jatropha oil feedstock;''

The remainder of POP Diesel's petition contained background information on challenges that POP Diesel says pure vegetable oil has faced in the marketplace, regarding which the petitioner is involved in litigation. NHTSA does not believe that these portions of the petition necessitate a response, as they do not directly relate to or support POP Diesel's petition for rulemaking.

Additionally, POP Diesel's requests regarding obtaining a Renewable Identification Number for plant oil (Requests E and F above) cannot be directed at NHTSA, given that they pertain to EPA's regulations implementing the Renewable Fuel Standard.

NHTSA notes that POP Diesel has requested the agency to revise the ''GHG standards'' throughout its petition.[4] NHTSA has no authority to, and did not, set GHG standards. Accordingly, POP Diesel's petition is denied. In the alternative, assuming that POP Diesel intended to petition NHTSA for a revision of the agency's fuel consumption standards, POP Diesel's petition is denied for the reasons discussed below.

III. Discussion and Analysis

The following section will consider POP Diesel's requests, to the extent that they appeared to be directed at NHTSA, in turn.

A. Decouple Fuel Efficiency Policy From GHG Emissions Policy

If POP Diesel meant to argue that the agencies should have chosen to regulate GHG emissions from a life-cycle perspective, or one that included consideration of plant-based fuels like the one utilized by POP Diesel's technology, rather than setting harmonized, performance-based fuel efficiency standards (NHTSA) and tailpipe GHG emissions standards (EPA), then the request is primarily directed at EPA, but NHTSA notes the following in response.

As discussed throughout the final rule, close coordination in this first heavy-duty rule enabled EPA and NHTSA to promulgate complementary standards that allow manufacturers to build one set of vehicles to comply with both agencies' regulations, as envisioned by the President. This coordination was widely supported by stakeholders and provided benefits for industry, government, and taxpayers by increasing regulatory efficiency and reducing compliance burdens. The harmonized structure of the final rule is also consistent with Executive Order 13563.[5]

Second, as stated above, NHTSA's statutory obligation is to create and administer a fuel efficiency improvement program—the agency does not have the option of *not* regulating fuel efficiency. *See* 49 U.S.C. 32902(k)(2). Insofar as NHTSA regulates fuel efficiency and EPA regulates GHG emissions, it makes sense for the agencies to harmonize their standards to the greatest extent possible—CO_2 represents the majority of GHG

[1] The ''rebound effect'' refers to the fraction of fuel savings expected to result from an increase in fuel efficiency that is offset by additional vehicle use. If truck shipping costs decrease as a result of lower fuel costs, an increase in truck miles traveled may occur. *See* 76 FR 57326 (Sept. 15, 2011).

[2] NHTSA notes that the engine and vehicle standards are entirely separate in the heavy-duty rule. Aside from the class 2b–3 pickups and van standards, which are based on a full vehicle test, no vehicle standard would take into account the performance measurement of the fuel that the vehicle would ultimately operate on.

[3] *See* POP Diesel Petition at 2–3.

[4] *See* POP Diesel Petition, *passim.*

[5] EO 13563 states that an agency shall ''tailor its regulations to impose the least burden on society, consistent with obtaining regulatory objectives, taking into account, among other things, and to the extent practicable, the costs of cumulative regulations,'' and ''promote such coordination, simplification, and harmonization'' as will reduce redundancy, inconsistency, and costs of multiple regulatory requirements.

emissions from motor vehicles, and is the natural by-product of carbon-based fuel consumption, so the same technologies that increase fuel efficiency (by reducing fuel consumption for a unit of work performed) reduce CO_2 emissions at the same time. Moreover, NHTSA has long maintained that a fundamental aspect of the country's need to conserve energy, which prompted the fuel efficiency standards, is to reduce GHG emissions associated with climate change in addition to securing energy independence through reduction of oil imports. Thus, NHTSA believes it is neither feasible nor desirable to ''decouple'' fuel efficiency policy from GHG emissions policy, given the extent to which the two are related.

And finally, to the extent that POP Diesel argued that fuel efficiency and GHG emissions are not related because of the rebound effect, NHTSA disagrees. Even if it somewhat decreases the degree of the connection, the rebound effect does not make the connection between improved fuel efficiency and reduced GHG emissions any less real. POP Diesel has not demonstrated otherwise.

B. ''Impose a Corporate Fleet Average for GHG Emissions on All Classes of Manufacturers of Engines and Vehicles as the Most Effective Way To Ramp Down Such Emissions Across the Medium- and Heavy-Duty Market''

POP Diesel argued that the agency should have accounted for the ''feasibility of equipping engines to operate on 100 percent untransesterified plant oil,'' and that if it had, it would have concluded that it should ''regulate GHG emissions [by imposing] a manufacturer GHG emissions average, like the corporate average fuel economy standards in place for light duty vehicles * * *.''[6] Assuming that POP Diesel meant to say that NHTSA should have imposed average manufacturer *fuel efficiency* standards, the agency notes that no particular engine or vehicle model is subject to its own standard; rather each manufacturer of vehicles or engines must comply with standards for each regulatory category.[7] NHTSA also notes, although it appears that POP Diesel referred to the corporate average fuel economy standards for light-duty vehicles more for the ''corporate average'' element than for the metric, that the medium- and heavy-duty standards are based on the ability of engines or vehicles to perform a certain amount of work (carry or haul weight) over a particular distance. This is a very different measurement than fuel economy, which is simply based on the amount of fuel consumed over a certain distance.

As discussed above, for this first regulatory phase of the medium- and heavy-duty vehicle fuel efficiency improvement program, NHTSA has adopted a fuel-neutral approach based on measurement of fuel consumption through measurement of tailpipe CO_2 emissions. NHTSA does not agree that expressly including POP Diesel's proprietary technology in its rulemaking analysis would change the agency's analysis in any substantive way that would support an amendment to the rulemaking either in terms of the agency's decision regarding levels of standard stringency, or in terms of the structure of the standards. 49 U.S.C. 32902(k)(2), the statutory provision granting NHTSA authority for the medium- and heavy-duty fuel efficiency improvement program, requires the agency to set maximum feasible standards that are ''appropriate, cost-effective, and technologically feasible.'' The agency has neither the obligation to set standards under 49 U.S.C. 32902(k)(2) based on all potentially feasible motor vehicle technologies, nor the capacity to do so. The existing standards are performance-based, and not expressly predicated on the use of any specific technology. Manufacturers are free to use whatever technologies they choose to meet the standards, including POP Diesel's technology. This allows for innovation.

POP Diesel also mentioned EPA's Renewable Fuel Standards, and stated that because ''pure plant oil is not eligible for the RFS,'' therefore the final rule does ''not provide any incentive for the use of 100 percent plant oil or an engine specially equipped to run on this fuel.''[8] NHTSA presumes that POP Diesel's argument was that if NHTSA had considered that the RFS does not include specific incentives for pure vegetable oil, the agency would have compensated for this by creating incentives within the heavy-duty rule. As explained above, the final rule was designed to be fuel-neutral. If POP Diesel's technology helps manufacturers reduce fuel consumption, then it will have the same opportunities as any other technology that manufacturers will use to meet NHTSA's standards. Moreover, NHTSA notes that POP Diesel has not correctly characterized NHTSA's consideration of the interaction between the RFS program and the heavy-duty fuel efficiency standards. As explained in the final rule, NHTSA determined that the performance measurement of alternative fuels provides sufficient incentives for their use. While the agencies noted that incentives in the RFS pointed to a lack of a need for further incentives, the rule's treatment of alternative fuels was not premised on each alternative fuel being covered by the RFS Standard.[9] Indeed, other alternative fuels are similarly not covered by the RFS standard, such as liquefied natural gas, compressed natural gas, propane, hydrogen and electricity.

C. Re-Evaluate ''the Weight the Agencies Give to Various Alternative Technologies and Fuels According to a [Life-Cycle] Approach''

NHTSA recognizes the potential benefits of increasing the use of any fuel type that reduces the nation's dependence on petroleum. As the President noted in his March 30, 2011 ''Blueprint for a Secure Energy Future,''[10] biofuels are one such fuel type with the potential to reduce the nation's demand for oil. NHTSA commends efforts to develop alternative fuels for light-, medium- and heavy-duty vehicles, and POP Diesel's work to make pure vegetable oil a more viable alternative fuel is in line with this goal.

POP Diesel's technology allows the use of fuels that it states are less carbon-intensive than other fuels, and POP Diesel argued in its petition that by considering only tailpipe rather than life-cycle GHG emissions of technologies and fuels, the agencies arbitrarily favor certain technologies and fuels and disfavor others. While reducing GHG emissions is a direct outcome of improving the fuel efficiency of the medium- and heavy-duty on-road fleet, the task that Congress gave to NHTSA was specifically to improve fuel efficiency. Therefore, any consideration that NHTSA may give to GHG emissions in general, and life-cycle GHG emissions in particular, is in the context of that directive. The final rule is performance-based and does not dictate particular technology. As the agency noted in the final rule,[11] alternative fueled vehicles provide fuel consumption benefits that should be, and are, accounted for in the standard. However, the agencies' approach to fuels does not provide

[6] POP Diesel Petition at 2.

[7] This, along with the rule's allowance for averaging, banking, and trading of credits across ''averaging sets,'' makes the standards effectively corporate averages.

[8] POP Diesel Petition at 7.

[9] *See* 76 FR 57124.

[10] *http://www.whitehouse.gov/sites/default/files/blueprint_secure_energy_future.pdf.*

[11] *See* 76 FR 57124.

additional incentives for fuels based on their petroleum content.

As POP Diesel noted, the agency calculates the fuel consumption performance of engines and heavy-duty pickup trucks and vans by measuring tailpipe CO_2 emissions and converting the measured value to an equivalent fuel consumption value. This method aligns with the EPA measurement method that is used to determine CO_2 emissions performance, and by aligning, promotes consistency in the national program. NHTSA recognized that it could have selected other methods of measuring fuel consumption, such as deriving fuel consumption performance based on gasoline or diesel energy equivalency.[12] However, the agency decided that maintaining consistency with the EPA measurement of CO_2 emissions to establish an aligned national program was the most appropriate approach for this first regulatory action.

This approach makes it unnecessary to distinguish among alternative fuel types in setting the standards, and this first phase of NHTSA's medium- and heavy-duty regulation does not include reductions in GHG emissions that do not translate directly to fuel consumption. Even if this were not the case, NHTSA believes that POP Diesel's claims regarding the commercial viability of pure vegetable oil and POP Diesel's proprietary technology to enable its usage in medium- and heavy-duty vehicles are speculative.

NHTSA recognized in the rule that this uniform approach to fuels may not take advantage of potential additional energy and national security benefits of increasing fleet percentages of alternative-fueled vehicles. More alternative-fueled vehicles on the road would arguably displace petroleum-fueled vehicles, and thereby increase both U.S. energy and national security by reducing the nation's dependence on foreign oil. However, for the reasons discussed above, the agency determined that the benefits of a harmonized initial program outweighed those potential benefits for this first phase of heavy-duty vehicle and engine standards.[13]

NHTSA continues to believe that the current fuel-neutral performance measurement is the most appropriate treatment of alternative fuels for this first phase of the heavy-duty fuel efficiency standards. As stated in the final rule, the agency intends to revisit this issue in the future to evaluate whether the fuel-neutral approach continues to provide greater benefits than alternative approaches.

[12] *Id.* at 57124–25.

[13] *Id.*

D. Revise the Final Rule Analysis of the Rebound Effect

POP Diesel argued that due to the rebound effect, the final standards will in fact increase total GHG emissions beyond what would have occurred in the absence of the standards, rather than achieving the agencies' stated reductions in CO_2 emissions and fuel consumption.[14] POP Diesel stated that the agencies only considered the rebound effect in terms of improvements in ''fuel economy'' leading to increases in vehicle miles traveled (VMT), but should also have considered other direct effects,[15] ''indirect'' rebound effects,[16] and the ''frontier'' rebound effect, whereby improvements in energy efficiency promote the development or spread of new products that increase energy consumption and GHG emissions, such as when the availability of lower-cost trucking services leads to substitution of Internet shopping and home delivery via truck for conventional retailing.[17] POP Diesel may have meant to suggest that an analysis of the rebound effect that incorporates these aspects would have led the agencies to promulgate different standards, specifically, GHG standards based on fuel CO_2 content rather than fuel efficiency standards.

NHTSA notes that its statutory obligation is to create and administer a fuel efficiency improvement program—the agency does not have the option of *not* regulating fuel efficiency.[18] As for the question of whether the agency's analysis of the rebound effect in the final rule should have incorporated the aspects discussed in the POP Diesel petition, the agency believes that the agency's analysis of the rebound effect represents the most reliable basis on which to project the increases in commercial truck use that will occur in response to improvements in their fuel efficiency.

NHTSA believes that its estimates of the increased use of different classes of trucks that are likely to result from the improvements in their fuel efficiency required by the rule are based on sound data and reliable econometric methods. Moreover, the agency is confident that these estimates reflect the various components of the direct rebound effect that POP Diesel alleges they ignore, because the measures of aggregate nationwide truck use from which they are derived fully incorporate historical shifts of freight shipments from other transportation modes to trucking, continuing reorganization of freight logistics toward increased reliance on trucking services, and shifts to more distant sources of supply for raw materials and longer deliveries of finished goods to final markets. The agency's estimates also incorporate the historical response of the use of trucking services to measures of economic activity that generate demands for shipping of raw materials and finished products, including aggregate economic output, foreign trade, and retailing. As the agencies acknowledged in their analysis, however, research on the magnitude of the rebound effect for heavy-duty vehicles has been limited;[19] for this reason, the agencies will monitor and conduct research on the subject in an ongoing effort to improve their estimates.

NHTSA also notes that any increases in economy-wide energy consumption and GHG emissions resulting from indirect rebound effects cannot reasonably be ascribed to the requirement that vehicle manufacturers achieve higher fuel efficiency levels. If the indirect effects that cause those increases were included in the rulemaking analysis, however, they would undoubtedly add significantly to the economic benefits from the rule. Responses to lower-cost trucking services, such as consumers' use of savings from lower prices of goods that utilize trucking services for their production and distribution to purchase other products that embody energy, as well as any increases in multi-factor productivity or frontier rebound impacts stemming from reduced truck energy consumption and lower shipping costs, represent important sources of *additional* economic benefits from requiring trucks to achieve higher fuel efficiency. Therefore, NHTSA does not

[14] See POP Diesel Petition, at 3–4.

[15] *See* POP Diesel Petition, at 4; ''Exhibit 1'' to POP Diesel Petition. Examples of direct rebound effects include shifts of some freight shipments from rail, barge, or other transportation modes to trucking, reorganization of freight shippers' logistics operations in ways that substitute increased use of trucking services for warehousing and inventory holding, shifts to more distant sources of supply for raw materials and expansion of market areas for finished goods, which entail longer trucking distances, reorganization of trucking firms' operations to emphasize objectives other than minimizing fuel consumption, such as use of lower-cost but less fuel-efficient vehicles for some shipments, less intensive truck maintenance, and less careful optimization of vehicle load factors, routing, and scheduling.

[16] *Id.* Examples of indirect rebound effects include increases in consumption of energy-intensive products as consumers reallocate savings from lower prices for goods shipped by truck to purchase other products, and ''multi-factor productivity'' rebound effects, where firms increase output levels and substitute increased use of trucking services for other production inputs.

[17] *Id.*

[18] *See* 49 U.S.C. 32902(k)(2).

[19] See 76 FR 57327–9.

believe that consideration of POP Diesel's claims regarding indirect rebound effects would have led the agency to promulgate different standards.

For purposes of the final standards, we believe that the agency's analysis of the rebound effect represents the best available estimate of the increases in commercial truck use that may result from increases in their fuel efficiency, and the extent to which these increases in use will offset the fuel savings (and thus, CO_2 emissions) projected to result from the recently-adopted rules. Thus, while NHTSA agrees that the rebound effect is present, we believe that it is adequately accounted for in the final rule. We do not believe that we would have promulgated different standards if our analysis of the rebound effect had been done differently, as POP Diesel recommended.

IV. Conclusion

In consideration of the foregoing, NHTSA is denying the POP Diesel Petition. In accordance with 49 CFR part 552, this completes the agency's review of the petition for rulemaking.

Authority: 49 U.S.C. 32902; delegation of authority at 49 CFR 1.95.

Issued: August 13, 2012.

Christopher J. Bonanti,

Associate Administrator for Rulemaking, National Highway Traffic Safety Administration, Department of Transportation.

[FR Doc. 2012–20838 Filed 8–23–12; 8:45 am]

BILLING CODE 4910–59–P

DEPARTMENT OF THE INTERIOR

Fish and Wildlife Service

DEPARTMENT OF COMMERCE

National Oceanic and Atmospheric Administration

50 CFR Part 424

[Docket No. FWS–R9–ES–2011–0073; Docket No. NOAA–120606146–2146–01; 4500030114]

RIN 1018–AY62; 0648–BC24

Endangered and Threatened Wildlife and Plants; Revisions to the Regulations for Impact Analyses of Critical Habitat

AGENCIES: Fish and Wildlife Service, Interior; National Marine Fisheries Service (NMFS), National Oceanic and Atmospheric Administration (NOAA), Commerce.

ACTION: Proposed rule.

SUMMARY: We, the U.S. Fish and Wildlife Service (FWS) and the National Marine Fisheries Service (NMFS) (collectively referred to as the ''Services'' or ''we''), propose to revise our regulations pertaining to impact analyses conducted for designations of critical habitat under the Endangered Species Act of 1973, as amended (the Act). These changes are being proposed as directed by the President's February 28, 2012, memorandum, which directed us to take prompt steps to revise our regulations to provide that the economic analysis be completed and made available for public comment at the time of publication of a proposed rule to designate critical habitat.

DATES: We will accept comments from all interested parties until October 23, 2012. Please note that if you are using the Federal eRulemaking Portal (see **ADDRESSES** below), the deadline for submitting an electronic comment is 11:59 p.m. Eastern Standard Time on this date.

ADDRESSES: You may submit comments by one of the following methods:

- *Federal eRulemaking Portal: http://www.regulations.gov.* Search for FWS–R9–ES–2011–0073, which is the docket number for this rulemaking.
- *U.S. mail or hand delivery:* Public Comments Processing, Attn: FWS–R9–ES–2011–0073; Division of Policy and Directives Management; U.S. Fish and Wildlife Service; 4401 N. Fairfax Drive, PDM–2042; Arlington, VA 22203.

We will post all comments on *http://www.regulations.gov.* This generally means that we will post any personal information you provide us (see the Request for Information section below for more information).

FOR FURTHER INFORMATION CONTACT: Nicole Alt, U.S. Fish and Wildlife Service, Division of Conservation and Classification, 4401 N Fairfax Drive, Suite 420, Arlington, VA 22203, telephone 703/358–2171; facsimile 703/358–1735; or Marta Nammack, National Marine Fisheries Service, Office of Protected Resources, 1315 East-West Highway, Silver Spring, MD 20910, telephone 301/713–1401; facsimile 301/713–0376. If you use a telecommunications device for the deaf (TDD), call the Federal Information Relay Service (FIRS) at 800–877–8339.

SUPPLEMENTARY INFORMATION:

Executive Summary

Why we need to publish a rule. The Services have decided to revise our regulations to provide the public earlier access to the draft economic analysis supporting critical habitat designations, consistent with the President's memorandum (Memorandum for the Secretary of the Interior, Proposed Revised Habitat for the Spotted Owl: Minimizing Regulatory Burdens, 77 FR 12985 (March 5, 2012)). The President's February 28, 2012, memorandum directed the Secretary of the Interior to revise the regulations implementing the Endangered Species Act to provide that a draft economic analysis be completed and made available for public comment at the time of publication of a proposed rule to designate critical habitat. Both transparency and public comment will be improved if the public has access to both the scientific analysis and the draft economic analysis at the same time. We are therefore publishing a proposed rule to achieve that goal and seeking public comments. Because the Act and its implementing regulations are jointly administered by the Departments of the Interior and Commerce, the Secretary of the Interior consulted with the Secretary of Commerce on the revision of this regulation. The proposed revisions would also address several court decisions and are informed by conclusions from a 2008 legal opinion by the Solicitor of the Department of the Interior. Specifically, we propose to revise 50 CFR 424.19 to clarify the instructions for making information available to the public, considering the impacts of critical habitat designations, and considering exclusions from critical habitat. The proposed rule is consistent with Executive Order 13563, and in particular with the requirement of retrospective analysis of existing rules, designed ''to make the agency's regulatory program more effective or less burdensome in achieving the regulatory objectives.

This rule proposes the following changes:

(1) We propose to change the title of § 424.19 from *''Final Rules—impact analysis of critical habitat''* to *''Impact analysis and exclusions from critical habitat.''* We propose to remove the current reference to ''[f]inal rules'' to allow this section to apply to both proposed and final critical habitat rules. We propose to add the term ''exclusions'' in the title to more fully describe that this section addresses both impact analyses and how they inform the exclusion process under section 4(b)(2) of the Act for critical habitat.

(2) We propose to divide current § 424.19 into three paragraphs. The division into three paragraphs closely tracks the requirements of the Act under section 4(b)(2) and provides for a clearly defined process for considerations of exclusions as required under the Act.

(3) Proposed paragraph (a) would implement the direction of the

President's February 28, 2012, memorandum by stating that, at the time of proposing a designation of critical habitat, the Secretary will make available for public comment the draft economic analysis of the designation. This proposed paragraph also carries over the first half of the first sentence of the existing regulation, with modifications.

(4) Proposed paragraph (b) would implement the first sentence of section 4(b)(2) of the Act, which directs the Secretary to consider the economic impact, the impact on national security, and any other relevant impact of specifying any particular area as critical habitat. This paragraph states that the impact analysis should focus on the incremental effects resulting from the designation of critical habitat.

(5) Proposed paragraph (c) would implement the second sentence of section 4(b)(2) of the Act, which allows the Secretary to exclude areas from the final critical habitat designation under certain circumstances.

Background

The purposes of the Endangered Species Act of 1973, as amended (16 U.S.C. 1531 *et seq.*) (Act), are to provide a means to conserve the ecosystems upon which listed species depend, to develop a program for the conservation of listed species, and to achieve the purposes of certain treaties and conventions. Moreover, the Act states that it is the policy of Congress that the Federal Government will seek to conserve threatened and endangered species, and use its authorities in furtherance of the purposes of the Act.

In passing the Act, Congress viewed habitat loss as a significant factor contributing to species endangerment. Habitat destruction and degradation have been a contributing factor causing the decline of a majority of species listed as threatened or endangered under the Act (Wilcove *et al.* 1998). The present or threatened destruction, modification, or curtailment of a species' habitat or range is included in the Act as one of the factors on which to base a determination that a species may be threatened or endangered. One of the tools provided by the Act to conserve species is designation of critical habitat.

Critical habitat represents the habitat necessary for the species' recovery. Once designated, critical habitat provides for the conservation of listed species in several ways. Specifying the geographic location of critical habitat facilitates implementation of section 7(a)(1) of the Act by identifying areas where Federal agencies can focus their conservation programs and use their authorities to further the purposes of the Act. Designating critical habitat also helps focus the efforts of other conservation partners, such as State and local governments, nongovernmental organizations, and individuals. Furthermore, when designation of critical habitat occurs near the time of listing, it provides early conservation planning guidance to bridge the gap until the Services can complete more thorough recovery planning.

In addition to serving as a notification tool, the designation of critical habitat also provides a significant regulatory protection—the requirement that Federal agencies consult with the Services under section 7(a)(2) of the Act to ensure that their actions are not likely to destroy or adversely modify critical habitat. The Federal Government, through its role in water management, flood control, regulation of resources extraction and other industries, Federal land management, and funding, authorization, or conduct of myriad other activities, may propose actions that are likely to affect critical habitat. The designation of critical habitat ensures that the Federal Government considers the effects of its actions on habitat important to species' conservation and avoids or modifies those actions that are likely to destroy or adversely modify critical habitat. This benefit should be especially valuable when, for example, species presence or habitats are ephemeral in nature, species presence is difficult to establish through surveys (e.g., when a species such as a plant's ''presence'' may be limited to a seed bank), or protection of unoccupied habitat is essential for the conservation of the species.

The Secretaries of the Interior and Commerce (the ''Secretaries'') share responsibilities for implementing most of the provisions of the Act. Generally, marine and anadromous species are under the jurisdiction of the Secretary of Commerce and all other species are under the jurisdiction of the Secretary of the Interior, though jurisdiction is shared between the two departments for some species, such as sea turtles and Atlantic salmon. Authority to administer the Act has been delegated by the Secretary of the Interior to the Director of the FWS and by the Secretary of Commerce to the Assistant Administrator for NMFS.

This proposed rule addresses two developments related to 50 CFR 424.19. First, the Solicitor of the Department of the Interior issued a legal opinion on October 3, 2008, regarding the Secretary of the Interior's authority to exclude areas from critical habitat designation under section 4(b)(2) of the Act (M–37016, ''The Secretary's Authority to Exclude Areas from a Critical Habitat Designation under Section 4(b)(2) of the Endangered Species Act'' (Oct. 3, 2008)) (DOI 2008). The Solicitor concluded, among other things, that, while the Act requires the Secretary to consider the economic impact, the impact on national security, and any other relevant impact, the decision whether to make exclusions under section 4(b)(2) of the Act is at the discretion of the Secretary; that the Secretary has wide discretion when weighing the benefits of exclusion against the benefits of inclusion; and that it is appropriate for the Secretary to consider impacts of a critical habitat designation on an incremental basis. The Services have based this proposed rule on the reasoning and conclusions of this opinion and the President's February 28, 2012, memorandum.

Second, the President's February 28, 2012 memorandum that directed the Secretary of the Interior to revise the implementing regulations of the Act to provide that an analysis of the economic impacts of a proposed critical habitat designation be completed by the Services and made available to the public at the time of publication of a proposed rule to designate critical habitat. The memo stated: ''Uncertainty on the part of the public may be avoided, and public comment improved, by simultaneous presentation of the best scientific data available and the analysis of economic and other impacts.''

Discussion of Proposed Revisions to 50 CFR 424.19

This proposal would revise 50 CFR 424.19 to clarify the instructions for making information available to the public, considering the impacts of critical habitat designations, and considering exclusions from critical habitat.

In proposing the specific changes to the regulations that follow, and setting out the accompanying clarifying discussion in this preamble, the Services are establishing prospective standards only. Nothing in these proposed revised regulations is intended to require (now or at such time as these regulations may become final) that any previously completed critical habitat designation be reevaluated on this basis. Furthermore, if this proposed rule is finalized, we will adopt the requirements of this regulation after the effective date. For proposed critical habitat designations published prior to the effective date of any final regulation,

the Services will continue to follow their current practices.

Statutory Authority

The proposed regulatory changes described below derive from sections 4(b)(2) and 4(b)(8) of the Act. For the convenience of the reader, we are reprinting those sections of the Act here:

(2) The Secretary shall designate critical habitat, and make revisions thereto, under subsection (a)(3) on the basis of the best scientific data available and after taking into consideration the economic impact, the impact on national security, and any other relevant impact, of specifying any particular area as critical habitat. The Secretary may exclude any area from critical habitat if he determines that the benefits of such exclusion outweigh the benefits of specifying such area as part of the critical habitat, unless he determines, based on the best scientific and commercial data available, that the failure to designate such area as critical habitat will result in the extinction of the species concerned.

* * * * *

(8) The publication in the **Federal Register** of any proposed or final regulation which is necessary or appropriate to carry out the purposes of this Act shall include a summary by the Secretary of the data on which such regulation is based and shall show the relationship of such data to such regulation; and if such regulation designates or revises critical habitat, such summary shall, to the maximum extent practicable, also include a brief description and evaluation of those activities (whether public or private) which, in the opinion of the Secretary, if undertaken may adversely modify such habitat, or may be affected by such designation.

Definition of Key Terms

Under the first sentence of section 4(b)(2) of the Act, the Services are required to take ''into consideration the economic impact, the impact on national security, and any other relevant impact, of specifying any particular area as critical habitat.'' This is referred to as the ''impact analysis.'' Under the second sentence of section 4(b)(2) of the Act, the Secretary (via delegated authority to the Services) may exclude an area from critical habitat after identifying and weighing the benefits of inclusion and exclusion. This is referred to as the ''weighing of benefits''.

An economic analysis is a tool that informs both the required impact analysis and the discretionary weighing of benefits. Additionally, the draft economic analysis informs the determinations established under other statutes, regulations, or directives that are applicable to rulemakings generally, including critical habitat designations. However, the draft economic analysis only addresses the consideration of the potential economic impact of the designation of critical habitat.

An ''incremental analysis'' is a method of determining the probable impacts of the designation that seeks to identify and focus solely on the impacts over and above those caused by existing protections and is used in the impact analysis, weighing of benefits, and economic analysis.

Relationship of the Key Terms

The purpose of the impact analysis is to inform the Secretary's decision about whether and/or how to consider excluding any particular area from a designation of critical habitat, as authorized by the second sentence of section 4(b)(2) of the Act. Information that is used in the impact analysis can come from a variety of sources, one of which is the draft economic analysis of the proposed designation of critical habitat. The Secretary must consider the probable economic, national security and other relevant impacts of the designation of critical habitat. This comparison is done through the method of an incremental analysis; that is, comparing conditions with and without the designation of critical habitat. The incremental analysis methodology is also used in the economic analysis.

Proposed Revisions to 50 CFR 424.19

We propose to change the title of this section from ''Final rules—impact analysis of critical habitat'' to ''Impact analysis and exclusions from critical habitat.'' The current reference to ''[f]inal rules'' would be deleted to allow for the application of this section to both proposed and final critical habitat rules. We propose to add the term ''exclusions'' to the title to more fully describe that this section addresses both impact analyses and how they inform the exclusion process under section 4(b)(2) of the Act for critical habitat.

In the following text, we frequently refer to the current regulatory language at 50 CFR 424.19 and then give detailed information about how we propose to revise that language. For your convenience, we set out the current text of § 424.19 here:

The Secretary shall identify any significant activities that would either affect an area considered for designation as critical habitat or be likely to be affected by the designation, and shall, after proposing designation of such an area, consider the probable economic and other impacts of the designation upon proposed or ongoing activities. The Secretary may exclude any portion of such an area from the critical habitat if the benefits of such exclusion outweigh the benefits of specifying the area as part of the critical habitat. The Secretary shall not exclude any such area if, based on the best scientific and commercial data available, he determines that the failure to designate that area as critical habitat will result in the extinction of the species concerned.

Rationale for the Proposed Paragraph (a)

We propose to divide current § 424.19 into three paragraphs. The first two sentences of proposed paragraph (a) are new and are being added to comply with the Presidential Memorandum. They would read:

At the time of publication of a proposed rule to designate critical habitat, the Secretary will make available for public comment the draft economic analysis of the designation. The draft economic analysis will be summarized in the **Federal Register** notice of the proposed designation of critical habitat.

The President's February 28, 2012 memorandum directed the Secretary of the Interior to take 'prompt steps' to revise the regulations. The first sentence of this proposed change to the regulations will comply with the President's direction. The second sentence specifies that a summary of the draft economic analysis would be published in the **Federal Register** notice of the proposed designation of critical habitat. The draft economic analysis itself would be made available on *http://www.regulations.gov* along with the proposed designation of critical habitat or on other Web sites as deemed appropriate by the Services.

The third sentence of proposed paragraph (a) would carry over the first half of the first sentence of the existing § 424.19, with modifications. It would read:

The Secretary will, to the maximum extent practicable, when proposing and finalizing designation of critical habitat, briefly describe and evaluate in the **Federal Register** notice any significant activities that are known to have the potential to affect an area considered for designation as critical habitat or be likely to be affected by the designation.

This language implements section 4(b)(8) of the Act. We propose to add ''to the maximum extent practicable'' to track the statutory language. For the same reason, we would replace ''identify'' with ''briefly describe and evaluate.'' We emphasize, however, the statutory term ''brief,'' i.e., the description and evaluation is not meant to be an exhaustive analysis. The Services cannot predict the outcome of any potential section 7 consultation. Rather, the purpose of this language in section 4(b)(8) is merely to alert the public generally to the relationship between the designation of critical habitat and activities on the landscape. We add the phrase ''in the **Federal Register** notice'' to make clear that this

brief description and evaluation will be published in the **Federal Register** notice of the designation of critical habitat.

We would keep the modifier ''significant'' with respect to activities, which clarifies that the statutory language should not be interpreted to apply to all activities, however insignificant. We propose to replace ''would * * * affect an area'' with ''are known to have the potential to affect an area'' to make clear that the Services are not able to predict with certainty what activities to address, but must infer the activities from the best available information.

Rationale for the Proposed Paragraph (b)

Proposed paragraph (b) would implement the first sentence of section 4(b)(2) of the Act (''The Secretary shall designate critical habitat * * * after taking into consideration the economic impact, the impact on national security, and any other relevant impact, of specifying any particular area as critical habitat.''). The proposed first sentence would carry over the second half of the first sentence of the existing § 424.19, with modifications, and would thus repeat the basic statutory requirement. We propose to replace ''after proposing designation of such an area'' with ''[p]rior to finalizing the designation of critical habitat'' to expressly provide for more flexibility in the timing of the consideration. The proposed first sentence would read:

> Prior to finalizing the designation of critical habitat, the Secretary will consider the probable economic, national security, and other relevant impacts of the designation upon proposed or ongoing activities.

The statute itself requires only that the consideration occur—it does not specify when in the rulemaking process it must occur. That being said, we stress that the Act's legislative history is clear that Congress intended consideration of economic impacts to neither affect nor delay the listing of species. Therefore, regardless of the point in the rulemaking process at which consideration of economic impacts begins, that consideration must be kept analytically distinct from, and have no effect on the outcome or timing of, listing determinations. We also note that an draft economic analysis is only one of many pieces of information the Secretary uses in consideration of whether to exclude areas under section 4(b)(2) of the Act.

Also in proposed paragraph (b), we retained the phrases ''probable'' and ''upon proposed or ongoing activities.'' These phrases provide guidance that the Services should not consider improbable or speculative impacts, and clarify that whatever impacts the Services consider are merely generalized predictions. However, the Services do not intend that the term ''probable'' requires a showing of statistical probability or any specific numeric likelihood. Moreover, the ''activities'' at issue are only those that would require consultation under section 7 of the Act. *See* DOI 2008 at 10–12. Although impact analyses are based on the best scientific data available, any predictions of future impacts are inherently uncertain and subject to change. Thus, the Services should consider the likely general impact of the designation and not make specific predictions of the outcome of particular section 7 consultations that have not in fact been completed.

We propose to add the phrase ''national security'' to reflect statutory amendments to section 4(b)(2) of the Act (National Defense Authorization Act for Fiscal Year 2004, Pub. L. 108–136). Also, we propose to add the word ''relevant'' to the other impacts that the Services must consider to more closely track the statutory language.

The first sentence of proposed paragraph (b) uses the term ''consider,'' which reflects the statutory term ''consideration'' in section 4(b)(2) of the Act. The proposed regulations would not further define this term. However, we agree with the Solicitor's 2008 Opinion that, in the context of section 4(b)(2) of the Act, to ''consider'' impacts the Services must gather available information about the impacts on proposed or ongoing activities that would be subject to section 7 consultation, and then must give careful thought to the relevant information in the context of deciding whether to proceed with an exclusion analysis. *See* DOI 2008 at 14–16.

The second and third sentences of proposed paragraph (b) are additions that would provide further guidance on how the Services will consider impacts of critical habitat designation. They read:

> The Secretary will consider impacts at a scale that the Secretary determines to be appropriate, and will compare the impacts with and without the designation. Impacts may be qualitatively or quantitatively described.

The first phrase of the second sentence, ''[t]he Secretary will consider impacts at a scale that the Secretary determines to be appropriate,'' would clarify that the Secretary has the discretion to determine the scale at which impacts are considered. The Secretary would determine the appropriate scale based on what would most meaningfully or sufficiently inform the decision in a particular context. For example, for a wide-ranging species with many square miles (kilometers) of potential habitat across several States, a relatively coarse-scale analysis would be sufficiently informative, while for a narrow endemic species, with specialized habitat requirements and relatively few discrete occurrences, it might be appropriate to engage in a relatively fine-scale analysis for the designation of critical habitat. The Secretary may also use this discretion to focus the analysis on areas where impacts are more likely, e.g., non-Federal lands. *See* DOI 2008 at 17.

The second phrase of the second sentence, ''and will compare the impacts with and without designation,'' would clarify that impact analyses evaluate the *incremental* impacts of the designation. This is sometimes referred to as an ''incremental analysis'' or ''baseline approach.'' For the purpose of the impacts analysis required by the first sentence of section 4(b)(2) of the Act, the incremental impacts are those probable economic, national security, and other relevant impacts of the proposed critical habitat designation on ongoing or potential Federal actions that would not otherwise occur without the designation. Put another way, the incremental impacts are the probable impacts on Federal actions for which the designation is the ''but for'' cause.

To determine the incremental impacts of designating critical habitat, the Services compare the protections provided by the critical habitat designation (the world with the particular designation) to the combined effects of all conservation-related protections for the species (including listing) and its habitat in the absence of the designation of critical habitat (the world without designation, i.e., the baseline condition). Thus, determining the incremental impacts requires identifying at a general level the additional protections that a critical habitat designation would provide for the species; this does not require the prejudging of the precise outcomes of hypothetical section 7 consultations. Finally, the Services determine what probable impacts those incremental protections will have on Federal actions, in terms of economic, national security, or other relevant impacts (the incremental impacts). *See* DOI 2008 at 11. Potential impacts to Federal actions could occur on private as well as public lands.

In addition to using an incremental analysis in the impacts analysis, the

Secretary will use an incremental analysis in the weighing of benefits under the second sentence of section 4(b)(2), if the Secretary decides to undertake that optional analysis. In that context, the Secretary will use an incremental analysis to identify the benefits (economic and otherwise) of excluding an area from critical habitat, and will likewise use an incremental analysis to identify the benefits of specifying an area as critical habitat.

Benefits that may be addressed in the weighing of benefits can result from additional protections, in the form of project modifications or conservation measures due to consultation under section 7 of the Act; conversely, a benefit of exclusion can be avoiding costs associated with those protections. In addition, benefits (and associated costs) can result if the designation triggers compliance with separate authorities that are exercised in part as a result of the Federal critical habitat designation (e.g., additional reviews, procedures, or protections under State or local jurisdictional authorities). *See* DOI 2008 at 22–23.

Finally, because its primary purpose is to facilitate the impact analysis and the weighing of benefits, the draft and final economic analyses should focus on the incremental economic benefits of the designation.

Use of an incremental analysis in each of these contexts is the only logical way to implement the Act. The purpose of the impact analysis (described in the third sentence of proposed paragraph (a)) is to inform the Secretary's decision about whether to engage in the optional weighing of benefits under the second sentence of section 4(b)(2) of the Act (addressed in proposed paragraph (c)). To understand the difference that designation of an area makes and, therefore, the benefits of including an area in the designation or excluding an area from the designation, one must compare the hypothetical world with the designation to the hypothetical world without the designation. This is why the Services compare the protections provided by the designation to the protections without the designation. This is consistent with the general guidance given by the Office of Management and Budget to executive branch agencies as to how to conduct cost-benefit analyses. *See* Circular A–4 (available at *http://www.whitehouse.gov/omb/circulars/a004/a-4.pdf*).

Nonetheless, between 2002 and 2008, the Services generally did not conduct an incremental analysis; instead they conducted a broader analysis of impacts pursuant to *New Mexico Cattlegrowers Ass'n* v. *FWS,* 248 F.3d 1277 (10th Cir. 2001). The genesis of the court's conclusion in that case was the definitions of ''jeopardize the continued existence of'' and ''destruction or adverse modification,'' which are the standards for section 7 consultations in the Services' 1986 joint regulations. *See* 50 CFR 402.02. Both phrases were defined in a similar manner in that they both looked to impacts on both survival and recovery of the species.

The court in *New Mexico Cattle Growers* noted the similarity of the definitions, concluding that they were ''virtually identical'' and that the definition of ''destruction or adverse modification'' was in effect subsumed into the jeopardy standard. 248 F.3d at 1283. According to the court, these definitions thus led FWS to conclude that designation of critical habitat usually had no incremental impact beyond the impacts of the listing itself. Thus, given these definitions, the court concluded that doing only an incremental analysis rendered meaningless the requirement of considering the impacts of the designation, as there were no incremental impacts to consider. Although the court noted that the regulatory definitions had previously been called into question, *id.* at 1283 n.2 (citing *Sierra Club* v. *U.S. Fish & Wildlife Serv.,* 245 F.3d 434 (5th Cir. 2001)), the validity of the regulations had not been challenged in the case before it. Instead, to cure this apparent problem, the court held that the FWS must analyze ''all of the impacts of a critical habitat designation, regardless of whether those impacts are attributable co-extensively to other causes.'' *Id.* at 1285.

In 2004, the Ninth Circuit (*Gifford Pinchot Task Force* v. *USFWS,* 378 F.3d 1059 (9th Cir. 2004)) invalidated the prior regulatory definition of ''destruction or adverse modification.'' The court held that the definition gave too little protection to critical habitat by not giving weight to Congress's intent that designated critical habitat support the recovery of listed species. Since then, the Services have been applying ''destruction or adverse modification'' in a way that allows the Services to define an incremental effect of designation. This eliminated the predicate for the Tenth Circuit's analysis. Therefore, the Services have concluded that it is appropriate to consider the impacts of designation on an incremental basis.

Indeed, no court outside of the Tenth Circuit has followed *New Mexico Cattle Growers* after the Ninth Circuit issued *Gifford Pinchot Task Force.* In particular, the Ninth Circuit recently concluded that the ''faulty premise'' that led to the invalidation of the incremental analysis approach in 2001 no longer applies. *Arizona Cattle Growers Ass'n* v. *Salazar,* 606 F.3d 1160, 1173 (9th Cir. 2010). The court held, in light of this change in circumstances, that ''the FWS may employ the baseline approach in analyzing a critical habitat designation.'' *Id.* In so holding, the court noted that the baseline approach is ''more logical than'' the coextensive approach. *Id.; see also:*

- *Maddalena* v. *FWS,* No. 08–CV–02292–H (AJB) (S.D. Cal. Aug. 5, 2010);
- *Otay Mesa Property L.P.* v. *DOI,* 714 F. Supp. 2d 73 (D.D.C. 2010);
- *Fisher* v. *Salazar,* 656 F. Supp. 2d 1357 (N.D. Fla. 2009);
- *Home Builders Ass'n of No. Cal.* v. *USFWS,* 2006 U.S. Dist. Lexis 80255 (E.D. Cal. Nov. 2, 2006), *reconsideration granted in part,* 2007 U.S. Dist. Lexis 5208 (Jan. 24, 2007), *aff'd,* 616 F.3d 983 (9th Cir. 2010);
- *CBD* v. *BLM,* 422 F. Supp. 2d 1115 (N.D. Cal. 2006);
- *Cape Hatteras Access Preservation Alliance* v. *DOI,* 344 F. Supp. 2d 108 (D.D.C. 2004).

The Solicitor's opinion also reaches this conclusion. *See* DOI 2008 at 18–22.

The Services may still, in appropriate circumstances, also analyze the broader impacts of conserving the species at issue to put the incremental impacts of the designation in context, or for complying with the requirements of other statutes or policies. *See:*

- *Arizona Cattle Growers' Ass'n* v. *Kempthorne,* 534 F. Supp. 2d 1013 (D. Ariz. 2008), *aff'd,* 606 F.3d 1160 (9th Cir. 2010);
- *Home Builders Ass'n of No. Cal.* v. *USFWS,* 2007 U.S. Dist. Lexis 5208 (E.D. Cal. Jan. 24, 2007), *aff'd,* 616 F.3d 983 (9th Cir. 2010);
- DOI 2008 at 21.

The third sentence of proposed paragraph (b) would clarify that impacts may be qualitatively or quantitatively described. In other words, there is no absolute requirement that impacts of any kind be quantified. *See Cape Hatteras Access Preservation Alliance* v. *DOI,* 731 F. Supp. 2d 15 (D.D.C. Aug. 17, 2010).

Rationale for the Proposed Paragraph (c)

Proposed paragraph (c) would implement the second sentence of section 4(b)(2) of the Act, which allows the Secretary to exclude areas from the final critical habitat designation under certain circumstances. It would read:

The Secretary has discretion to exclude any particular area from the critical habitat upon a determination that the benefits of such exclusion outweigh the benefits of specifying the particular area as part of the critical habitat. In identifying those benefits, in addition to the impacts considered pursuant to paragraph (b) of this section, the Secretary may consider and assign the weight to any benefits relevant to the designation of critical habitat. The Secretary, however, will not exclude any particular area if, based on the best scientific and commercial data available, the Secretary determines that the failure to designate that area as critical habitat will result in the extinction of the species concerned.

The first sentence of proposed paragraph (c) would carry over the second sentence of the existing section, with modifications. The phrase ''the Secretary has discretion'' would be added to emphasize that the exclusion of particular areas under section 4(b)(2) of the Act is always optional. *See* DOI 2008 at 6–9, 17. For example, the Secretary may choose not to exclude an area even if the impact analysis and subsequent balancing indicates that the benefits of exclusion exceed the benefits of inclusion and such exclusion would not result in the extinction of the species.

Additional minor changes to the first sentence would make it more closely track the statutory language.

The second sentence of paragraph (c) is new. They would codify aspects of the legislative history, the case law, and the Services' practices with respect to exclusions. The second sentence would clarify the breadth of the Secretary's discretion with respect to the types of benefits to consider. *See:*

- *CBD* v. *Norton,* 240 F. Supp. 2d 1090 (D. Ariz. 2003);
- *Home Builders Ass'n of No. Cal.* v. *USFWS,* 2006 U.S. Dist. Lexis 80255 (E.D. Cal. Nov. 2, 2006), *reconsideration granted in part* 2007 U.S. Dist. Lexis 5208 (Jan. 24, 2007), *aff'd,* 616 F.3d 983 (9th Cir. 2010);
- DOI 2008 at 25–28.

For example, the Secretary may consider effects on tribal sovereignty and the conservation efforts of non-Federal partners when considering excluding specific areas from a designation of critical habitat. The House Committee report that accompanied the 1978 amendments that added Section 4(b)(2) to the Act stated that ''[t]he consideration and weight given to any particular impact is completely within the Secretary's discretion.'' H.R. Rep. No. 95–1625, at 17. Subsequent case law and the Solicitor's Opinion have reflected that view, as does the rule proposed here. *See:*

- *CBD* v. *Salazar,* 2011 U.S. Dist. Lexis 26967 (D.D.C. Mar. 16, 2011);
- *Wyoming State Snowmobile Ass'n* v. *USFWS,* 741 F. Supp. 2d 1245 (D. Wyo. 2010);
- DOI 2008 at 24.

The third sentence of paragraph (c) essentially repeats the third sentence of the existing section. This sentence incorporates the limitation in the last clause of section 4(b)(2) of the Act. *See* DOI 2008 at 25.

Request for Information

Any final regulation based on this proposal will consider information and recommendations timely submitted from all interested parties. We, solicit comments, information, and recommendations from governmental agencies, Native American tribes, the scientific community, industry groups, environmental interest groups, and any other interested parties on this proposed regulation. All comments and materials received by the date listed in **DATES** above will be considered prior to the approval of a final document.

This rulemaking does not modify the current methods and procedures of identifying and evaluating potential incremental impacts of a designation of critical habitat. Nonetheless, we will accept comments on the Services' approach to incremental impacts as well as on the manner in which particular impacts are considered and weighed.

You may submit your information concerning this proposed rule by one of the methods listed in **ADDRESSES**. If you submit information via *http://www.regulations.gov,* your entire submission—including any personal identifying information—will be posted on the Web site. If your submission is made via a hardcopy that includes personal identifying information, you may request at the top of your document that we withhold this personal identifying information from public review. However, we cannot guarantee that we will be able to do so. We will post all hardcopy submissions on *http://www.regulations.gov.*

Information and supporting documentation that we receive in response to this proposed rule will be available for you to review at *http://www.regulations.gov,* or by appointment, during normal business hours, at the U.S. Fish and Wildlife Service, Division of Conservation and Classification (see **FOR FURTHER INFORMATION CONTACT**).

Required Determinations

Regulatory Planning and Review (Executive Orders 12866 and 13563)

Executive Order 12866 provides that the Office of Management and Budget's Office of Information and Regulatory Affairs (OIRA) will review all significant rules. The Office of Information and Regulatory Affairs has determined that this rule is significant because it raises novel legal or policy issues.

Executive Order 13563 reaffirms the principles of E.O. 12866 while calling for improvements in the nation's regulatory system to promote predictability, to reduce uncertainty, and to use the best, most innovative, and least burdensome tools for achieving regulatory ends. The executive order directs agencies to consider regulatory approaches that reduce burdens and maintain flexibility and freedom of choice for the public where these approaches are relevant, feasible, and consistent with regulatory objectives. E.O. 13563 emphasizes further that regulations must be based on the best available science and that the rulemaking process must allow for public participation and an open exchange of ideas. We have developed this rule in a manner consistent with these requirements. This proposed rule is consistent with Executive Order 13563, and in particular with the requirement of retrospective analysis of existing rules, designed ''to make the agency's regulatory program more effective or less burdensome in achieving the regulatory objectives.''

Regulatory Flexibility Act

Under the Regulatory Flexibility Act (as amended by the Small Business Regulatory Enforcement Fairness Act (SBREFA) of 1996; 5 U.S.C. 601 *et seq.*), whenever a Federal agency is required to publish a notice of rulemaking for any proposed or final rule, it must prepare, and make available for public comment, a regulatory flexibility analysis that describes the effect of the rule on small entities (i.e., small businesses, small organizations, and small government jurisdictions). However, no regulatory flexibility analysis is required if the head of an agency, or his designee, certifies that the rule will not have a significant economic impact on a substantial number of small entities. SBREFA amended the Regulatory Flexibility Act to require Federal agencies to provide a statement of the factual basis for certifying that a rule will not have a significant economic impact on a substantial number of small entities. We are certifying that these proposed

regulations would not have a significant economic effect on a substantial number of small entities. The following discussion explains our rationale.

The proposed revisions to the regulations revises and clarifies the regulations governing how the Services analyze and communicate the impacts of a possible designation of critical habitat, and how the Services may exercise the Secretary's discretion to exclude areas from designations. The proposed revisions to the regulations apply solely to the Services' procedures for the timing, scale, and scope of impact analyses and considering exclusions from critical habitat. The changes included in these proposed regulatory revisions serve to clarify, and do not expand the reach of, potential designations of critical habitat.

NMFS and FWS are the only entities that are directly affected by this rule because we are the only entities that can designate critical habitat. No external entities, including any small businesses, small organizations, or small governments, will experience any economic impacts from this rule. Therefore, the only effect on any external entities large or small would likely be positive through reducing any uncertainty on the part of the public by simultaneous presentation of the best scientific data available and the economic analysis of the designation of critical habitat.

Unfunded Mandates Reform Act (2 U.S.C. 1501 et seq.)

In accordance with the Unfunded Mandates Reform Act (2 U.S.C. 1501 *et seq.*):

(a) On the basis of information contained in the ''Regulatory Flexibility Act'' section above, these proposed regulations would not ''significantly or uniquely'' affect small governments. We have determined and certify pursuant to the Unfunded Mandates Reform Act, 2 U.S.C. 1502, that these regulations would not impose a cost of $100 million or more in any given year on local or State governments or private entities. A Small Government Agency Plan is not required. As explained above, small governments would not be affected because the proposed regulations would not place additional requirements on any city, county, or other local municipalities.

(b) These proposed regulations would not produce a Federal mandate on State, local, or tribal governments or the private sector of $100 million or greater in any year; that is, this proposed rule is not a ''significant regulatory action''' under the Unfunded Mandates Reform Act. These proposed regulations would impose no obligations on State, local, or tribal governments.

Takings (E.O. 12630)

In accordance with Executive Order 12630, these proposed regulations would not have significant takings implications. These proposed regulations would not pertain to ''taking'' of private property interests, nor would they directly affect private property. A takings implication assessment is not required because these proposed regulations (1) would not effectively compel a property owner to suffer a physical invasion of property and (2) would not deny all economically beneficial or productive use of the land or aquatic resources. These proposed regulations would substantially advance a legitimate government interest (conservation and recovery of endangered and threatened species) and would not present a barrier to all reasonable and expected beneficial use of private property.

Federalism (E.O. 13132)

In accordance with Executive Order 13132, we have considered whether these proposed regulations would have significant Federalism effects and have determined that a Federalism assessment is not required. These proposed regulations pertain only to determinations to designate critical habitat under section 4 of the Act, and would not have substantial direct effects on the States, on the relationship between the Federal Government and the States, or on the distribution of power and responsibilities among the various levels of government.

Civil Justice Reform (E.O. 12988)

These proposed regulations do not unduly burden the judicial system and meet the applicable standards provided in sections 3(a) and 3(b)(2) of Executive Order 12988. These proposed regulations would clarify how the Services will make designations of critical habitat under section 4 of the Act.

Government-to-Government Relationship With Tribes

In accordance with the President's memorandum of April 29, 1994, ''Government-to-Government Relations with Native American Tribal Governments'' (59 FR 22951), Executive Order 13175, and the Department of the Interior's manual at 512 DM 2, we readily acknowledge our responsibility to communicate meaningfully with recognized Federal Tribes on a government-to-government basis. In our proposed regulations, we explain that the Secretaries have discretion to exclude any particular area from the critical habitat upon a determination that the benefits of exclusion outweigh the benefits of specifying the particular area as part of the critical habitat. In identifying those benefits, the Secretaries may consider effects on tribal sovereignty.

Paperwork Reduction Act

This proposed rule does not contain any new collections of information that require approval by the OMB under the Paperwork Reduction Act. This proposed rule would not impose recordkeeping or reporting requirements on State or local governments, individuals, businesses, or organizations. An agency may not conduct or sponsor, and a person is not required to respond to, a collection of information unless it displays a currently valid OMB control number.

National Environmental Policy Act

We are analyzing these proposed regulations in accordance with the criteria of the National Environmental Policy Act (NEPA), the Department of the Interior Manual (318 DM 2.2(g) and 6.3(D)), and Department of Commerce Departmental Administrative Order 216–6. We will complete our analysis, in compliance with NEPA, before finalizing these proposed regulations.

Energy Supply, Distribution or Use E.O. 13211)

Executive Order 13211 requires agencies to prepare Statements of Energy Effects when undertaking certain actions. These proposed regulations, if made final, are not expected to affect energy supplies, distribution, and use. Therefore, this action is not a significant energy action, and no Statement of Energy Effects is required.

Clarity of This Proposed Rule

We are required by Executive Orders 12866 and 12988 and by the Presidential Memorandum of June 1, 1998, to write all rules in plain language. This means that each rule or policy we publish must:

(a) Be logically organized;

(b) Use the active voice to address readers directly;

(c) Use clear language rather than jargon;

(d) Be divided into short sections and sentences; and

(e) Use lists and tables wherever possible.

If you feel that we have not met these requirements, send us comments by one of the methods listed in **ADDRESSES**. To better help us revise the proposed rule,

your comments should be as specific as possible. For example, you should tell us the sections or paragraphs that are unclearly written, which sections or sentences are too long, the sections where you feel lists or tables would be useful, etc.

References Cited

A complete list of all references cited in this document is available on the Internet at *http://www.regulations.gov* at Docket No. FWS–R9–ES–2011–0073 or upon request from the U.S. Fish and Wildlife Service (see **FOR FURTHER INFORMATION CONTACT**).

Authority

We are taking this action under the authority of the Endangered Species Act of 1973, as amended (16 U.S.C. 1531 *et seq.*).

List of Subjects in 50 CFR Part 424

Administrative practice and procedure, Endangered and threatened species.

Proposed Regulation Promulgation

PART 424—[AMENDED]

1. The authority citation for part 424 is revised to read as follows:

Authority: 16 U.S.C. 1531 *et seq.*

2. Revise § 424.19, including the section heading, to read as follows:

§ 424.19 Impact analysis and exclusions from critical habitat.

(a) At the time of publication of a proposed rule to designate critical habitat, the Secretary will make available for public comment the draft economic analysis of the designation. The draft economic analysis will be summarized in the **Federal Register** notice of the proposed designation of critical habitat.

The Secretary will, to the maximum extent practicable, when proposing and finalizing designation of critical habitat, briefly describe and evaluate in the **Federal Register** notice any significant activities that are known to have the potential to affect an area considered for designation as critical habitat or be likely to be affected by the designation.

(b) Prior to finalizing the designation of critical habitat, the Secretary will consider the probable economic, national security, and other relevant impacts of the designation upon proposed or ongoing activities. The Secretary will consider impacts at a scale that the Secretary determines to be appropriate, and will compare the impacts with and without the designation. Impacts may be qualitatively or quantitatively described.

(c) The Secretary has discretion to exclude any particular area from the critical habitat upon a determination that the benefits of such exclusion outweigh the benefits of specifying the particular area as part of the critical habitat. In identifying those benefits, in addition to the impacts considered pursuant to paragraph (b) of this section, the Secretary may consider and assign the weight to any benefits relevant to the designation of critical habitat. The Secretary, however, will not exclude any particular area if, based on the best scientific and commercial data available, the Secretary determines that the failure to designate that area as critical habitat will result in the extinction of the species concerned.

Dated: June 1, 2012.

Eileen Sobeck,

Acting Assistant Secretary for Fish and Wildlife and Parks, U.S. Department of the Interior.

Dated: August 13, 2012.

Alan D. Risenhoover,

Acting Deputy Assistant Administrator for Regulatory Programs, National Marine Fisheries Service.

[FR Doc. 2012–20438 Filed 8–23–12; 8:45 am]

BILLING CODE 4310–55–P; 3510–22–P

Notices

Federal Register

Vol. 77, No. 165

Friday, August 24, 2012

This section of the FEDERAL REGISTER contains documents other than rules or proposed rules that are applicable to the public. Notices of hearings and investigations, committee meetings, agency decisions and rulings, delegations of authority, filing of petitions and applications and agency statements of organization and functions are examples of documents appearing in this section.

DEPARTMENT OF AGRICULTURE

Submission for OMB Review; Comment Request

August 21, 2012.

The Department of Agriculture has submitted the following information collection requirement(s) to OMB for review and clearance under the Paperwork Reduction Act of 1995, Public Law 104–13. Comments regarding (a) whether the collection of information is necessary for the proper performance of the functions of the agency, including whether the information will have practical utility; (b) the accuracy of the agency's estimate of burden including the validity of the methodology and assumptions used; (c) ways to enhance the quality, utility and clarity of the information to be collected; (d) ways to minimize the burden of the collection of information on those who are to respond, including through the use of appropriate automated, electronic, mechanical, or other technological collection techniques or other forms of information technology should be addressed to: Desk Officer for Agriculture, Office of Information and Regulatory Affairs, Office of Management and Budget (OMB), *OIRA_Submission@OMB.EOP.GOV* or fax (202) 395–5806 and to Departmental Clearance Office, USDA, OCIO, Mail Stop 7602, Washington, DC 20250–7602. Comments regarding these information collections are best assured of having their full effect if received within 30 days of this notification. Copies of the submission(s) may be obtained by calling (202) 720–8958.

An agency may not conduct or sponsor a collection of information unless the collection of information displays a currently valid OMB control number and the agency informs potential persons who are to respond to the collection of information that such persons are not required to respond to the collection of information unless it displays a currently valid OMB control number.

Food and Nutrition Service

Title: National Hunger Clearinghouse Database Form.

OMB Control Number: 0584–0474.

Summary of Collection: The National Hunger Clearinghouse collects, develops and distributes information and resources to help build the capacity of emergency food providers to address the immediate needs of struggling families and individuals while promoting self-reliance and access to healthy food. The Clearinghouse includes the National Hunger Hotline, which refers people in need anywhere in the U.S. to food pantries, soup kitchen, government programs and model grassroots organizations. Section 26 of the National School Lunch Act, which was added to the Act by Section 123 of Public Law 103–448 on November 2, 1994, mandated that the Food and Nutrition Service (FNS) enter into a contract with a non governmental organization to develop and maintain a national information clearinghouse of grassroots organizations working on hunger, food, nutrition, and other agricultural issues, including food recovery, food assistance and self-help activities to aid individuals to become self-reliant and other activities that empower low-income individuals. FNS will collect information using FNS–543, National Hunger Clearinghouse Database Form.

Need and Use of the Information: FNS will collect information to provide a resource for groups that assist low-income individuals or communities regarding nutrition assistance program or other assistance. The information aids FNS to fight hunger and improve nutrition by increasing participation in the FNS nutrition programs through the development, coordination, and evaluation of strategic initiatives, partnership, and outreach activities.

Description of Respondents: Not-for-profit institutions; Business or other for-profit.

Number of Respondents: 1,750.

Frequency of Responses: Reporting: Annually.

Total Burden Hours: 292.

Ruth Brown,

Departmental Information Collection Clearance Officer.

[FR Doc. 2012–20915 Filed 8–23–12; 8:45 am]

BILLING CODE 3410–30–P

DEPARTMENT OF AGRICULTURE

Food Safety and Inspection Service

[Docket No. FSIS–2012–0034]

Codex Alimentarius Commission: Meeting of the Codex Committee on Processed Fruits and Vegetables

AGENCY: Office of the Under Secretary for Food Safety, USDA.

ACTION: Notice of public meeting and request for comments.

SUMMARY: The Office of the Under Secretary for Food Safety, United States Department of Agriculture (USDA), and the Agricultural Marketing Service (AMS), are sponsoring a public meeting on September 17, 2012. The objective of the public meeting is to provide information and receive public comments on agenda items and draft United States (U.S.) positions that will be discussed at the 26th session of the Codex Committee on Processed Fruits and Vegetables (CCPFV) of the Codex Alimentarius Commission (Codex), which will be held in Montego Bay, Jamaica from October 15–19, 2012. The Under Secretary for Food Safety and AMS recognize the importance of providing interested parties the opportunity to obtain background information on the 26th Session of the CCPFV and to address items on the agenda.

DATES: The public meeting is scheduled for September 17, 2012, from 1:00 p.m.–3:00 p.m.

ADDRESSES: The public meeting will be held at USDA, Jamie L. Whitten Building, 1400 Independence Avenue SW., Room 107–A, Washington, DC 20250.

Documents related to the 26th session of the CCPFV will be accessible via the World Wide Web at the following address: *http://www.codexalimentarius.org/*.

Dorian LaFond, U.S. Delegate to the 26th session of the CCPFV, invites U.S. interested parties to submit their comments electronically to the

following email address: *dorian.lafond@usda.gov*.

Call-In Number:

If you wish to participate in the public meeting for the 26th session of the CCPFV by conference call, please use the call-in number and participant code listed below:

Call-in Number: 1–888–858–2144

Participant code: 6208658

For Further Information About the 26th Session of the CCPFV Contact: Dorian LaFond, AMS, Fruits and Vegetables Division, Stop 0235, Room 2086, South Agriculture Building, 1400 Independence Avenue SW., Washington, DC 20250–0235, Phone: (202) 690–4944, Fax: (202) 720–0016, Email: *dorian.lafond@usda.gov*.

For Further Information About the Public Meeting Contact: Jasmine Curtis, U.S. Codex Office, 1400 Independence Avenue SW., Room 4865, Washington, DC 20250. Phone: (202) 690–1124, Fax: (202) 720–3157, Email: *Jasmine.Curtis@fsis.usda.gov*.

SUPPLEMENTARY INFORMATION:

Background

Codex was established in 1963 by two United Nations organizations, the Food and Agriculture Organization and the World Health Organization. Through adoption of food standards, codes of practice, and other guidelines developed by its committees, and by promoting their adoption and implementation by governments, Codex seeks to protect the health of consumers and ensure fair practices in the food trade.

The CCPFV is responsible for: Elaborating worldwide standards and related texts for all types of processed fruits and vegetables including but not limited to canned, dried and frozen products as well as fruit and vegetable juices and nectars.

The Committee is hosted by the United States.

Issues To Be Discussed at the Public Meeting

The following items on the agenda for the 26th session of the CCPFV will be discussed during the public meeting:

- Matters Referred to the CCPFV by Codex and Other Codex Committees
- Proposed Draft Codex Standard for Table Olives (Revision of Codex Standard 66–1981) (Step 4)
- Proposed Draft Codex Standard for Certain Canned Fruits (Revision of Remaining Individual Standards for Canned Fruits) (Step 4)
- Proposed Draft Codex Standard for Certain Quick Frozen Vegetables (Revision of Individual Standards for Quick Frozen Vegetables) (Step 4)
- Proposed Draft Sampling Plans Including Metrological Provisions for Controlling Minimum Drained Weight of Canned Fruits and Vegetables in Packing Media (Step 4)
- Food Additive Provisions for Processed Fruits and Vegetables: Additional Provisions for Inclusion in Selected Adopted and Under Development Standards
- Matters Related to Selected Codex Standards for Processed Fruits and Vegetables
- Discussion Paper on the Possible Extension of the Territorial Application of the Codex Regional Standard for Ginseng Products
- Discussion Paper on the Development of a Codex Standard for Chemically Flavored Water-Based Drinks
- Status of Work on the Revision of Codex Standards for Processed Fruits and Vegetables

Each issue listed will be fully described in documents distributed, or to be distributed, by the Secretariat prior to the meeting. Members of the public may access copies of these documents (see **ADDRESSES**).

Public Meeting

At the September 17, 2012, public meeting, draft U.S. positions on the agenda items will be described and discussed, and attendees will have the opportunity to pose questions and offer comments. Written comments may be offered at the meeting or sent to the U.S. Delegate for the 26th session of the CCPFV, Dorian LaFond (see **ADDRESSES**). Written comments should state that they relate to activities of the 26th session of the CCPFV.

Additional Public Notification

FSIS will announce this notice online through the FSIS Web page located at *http://www.fsis.usda.gov/regulations_&_policies/Federal_Register_Notices/index.asp*.

FSIS will also make copies of this **Federal Register** publication available through the FSIS Constituent Update, which is used to provide information regarding FSIS policies, procedures, regulations, **Federal Register** notices, FSIS public meetings, and other types of information that could affect or would be of interest to constituents and stakeholders. The Update is communicated via Listserv, a free electronic mail subscription service for industry, trade groups, consumer interest groups, health professionals, and other individuals who have asked to be included. The Update is also available on the FSIS Web page. In addition, FSIS offers an electronic mail subscription service which provides automatic and customized access to selected food safety news and information. This service is available at *http://www.fsis.usda.gov/News_&_Events/Email_Subscription/*.

Options range from recalls to export information to regulations, directives, and notices. Customers can add or delete subscriptions themselves, and have the option to password protect their accounts.

USDA Nondiscrimination Statement

USDA prohibits discrimination in all its programs and activities on the basis of race, color, national origin, gender, religion, age, disability, political beliefs, sexual orientation, and marital or family status. (Not all prohibited bases apply to all programs.) Persons with disabilities who require alternative means for communication of program information (Braille, large print, or audiotape) should contact USDA's Target Center at 202–720–2600 (voice and TTY).

To file a written complaint of discrimination, write USDA, Office of the Assistant Secretary for Civil Rights, 1400 Independence Avenue SW., Washington, DC 20250–9410 or call 202–720–5964 (voice and TTY). USDA is an equal opportunity provider and employer.

Done at Washington, DC on August 2, 2012.

Karen Stuck,

U.S. Manager for Codex Alimentarius.

[FR Doc. 2012–20814 Filed 8–23–12; 8:45 am]

BILLING CODE 3410–DM–P

DEPARTMENT OF AGRICULTURE

Forest Service

Allegheny Resource Advisory Committee

AGENCY: Forest Service, USDA.

ACTION: Notice of meeting.

SUMMARY: The Allegheny Resource Advisory Committee will meet in Warren, Pennsylvania. The committee is authorized under the Secure Rural Schools and Community Self-Determination Act (Pub. L 112–141) (the Act) and operates in compliance with the Federal Advisory Committee Act. The purpose of the committee is to improve collaborative relationships and to provide advice and recommendations to the Forest Service concerning projects and funding consistent with the title II of the Act. The meeting is open to the public. The purpose of the meetings is to review and recommend projects authorized under title II of the Act.

DATES: The meetings will be held September 12 and 26, 2012, at 10:00 a.m.

ADDRESSES: The meetings will be held at the Allegheny National Forest Supervisor's Office located at 4 Farm Colony Drive in Warren, Pennsylvania.

Written comments may be submitted as described under Supplementary Information. All comments, including names and addresses when provided, are placed in the record and are available for public inspection and copying. The public may inspect comments received at 4 Farm Colony Drive, Warren, Pennsylvania. Please call ahead to Kathy Mohney at (814) 728–6298 to facilitate entry into the building to view comments.

FOR FURTHER INFORMATION CONTACT: Kathy Mohney, RAC Coordinator, Allegheny National Forest Supervisor's Office, 4 Farm Colony Drive in Warren, Pennsylvania 16365, phone (814) 728–6298 or email *kmohney@fs.fed.us*. Individuals who use telecommunication devices for the deaf (TDD) may call the Federal Information Relay Service (FIRS) at 1–800–877–8339 between 8:00 a.m. and 8:00 p.m., Eastern Standard Time, Monday through Friday.

SUPPLEMENTARY INFORMATION: The following business will be conducted: Allegheny Resource Advisory Committee members will solicit and consider project proposals for recommendation for funding. Anyone who would like to bring related matters to the attention of the committee may file written statements with the committee staff before the meeting. The agenda will include time for people to make oral statements of three minutes or less. Individuals wishing to make an oral statement should request in writing by September 7, 2012, to be scheduled on the September 12, 2012, agenda, and by September 21, 2012, to be scheduled on the September 26, 2012, agenda. Written comments and requests for time for oral comments must be sent to 4 Farm Colony Drive, Warren, Pennsylvania 16365, or by email to *kmohney@fs.fed.us* or via facsimile to 814–726–1462. A summary of the meeting will be posted at *https://fsplaces.fs.fed.us/fsfiles/unit/wo/secure_rural_schools.nsf/RAC/F9B9F96FDB72CAE28825754A005A4689?OpenDocument* within 21 days of the meeting.

Meeting Accommodations: If you require sign language interpreting, assistive listening devices or other reasonable accommodation please request this in advance of the meeting by contacting the person listed in the section titled **FOR FURTHER INFORMATION CONTACT**. All reasonable accommodation requests are managed on a case by case basis.

Dated: August 17, 2012.

Kathy Albaugh,

Acting Forest Supervisor.

[FR Doc. 2012–20848 Filed 8–23–12; 8:45 am]

BILLING CODE 3410–11–P

DEPARTMENT OF AGRICULTURE

Forest Service

Lawrence County Resource Advisory Committee

AGENCY: Forest Service, USDA.

ACTION: Notice of meeting.

SUMMARY: The Lawrence County Resource Advisory Committee will meet in Spearfish, South Dakota. The committee is authorized under the Secure Rural Schools and Community Self-Determination Act (Pub. L. 112–141) (the Act) and operates in compliance with the Federal Advisory Committee Act. The purpose of the committee is to improve collaborative relationships and to provide advice and recommendations to the Forest Service concerning projects and funding consistent with the title II of the Act. The meeting is open to the public. The purpose of the meeting is to review and recommend projects authorized under title II of the Act.

DATES: The meeting will be held September 11, 2012, at 5:00 p.m.

ADDRESSES: The meeting will be held at the Northern Hills Ranger District Office located at 2014 N. Main, Spearfish, SD 57783.

Written comments may be submitted as described under **SUPPLEMENTARY INFORMATION**. All comments, including names and addresses when provided, are placed in the record and are available for public inspection and copying. The public may inspect comments received at the Northern Hills Ranger District Office. Please call ahead to 605–642–4622 to facilitate entry into the building to view comments.

FOR FURTHER INFORMATION CONTACT: Rhonda O'Byrne, District Ranger, Northern Hills Ranger District, 605–642–4622 or *rlobyrne@fs.fed.us.*

Individuals who use telecommunication devices for the deaf (TDD) may call the Federal Information Relay Service (FIRS) at 1–800–877–8339 between 8:00 a.m. and 8:00 p.m., Eastern Standard Time, Monday through Friday.

SUPPLEMENTARY INFORMATION: The following business will be conducted: review and recommend projects for approval. Anyone who would like to bring related matters to the attention of the committee may file written statements with the committee staff before or after the meeting. The agenda will include time for people to make oral statements of three minutes or less. Individuals wishing to make an oral statement should request in writing by Friday, September 8, 2012 to be scheduled on the agenda. Written comments and requests for time for oral comments must be sent to Rhonda O'Byrne, District Ranger, 2014 N. Main, Spearfish, SD 57783, or by email to *rlobyrne@fs.fed.us,* or via facsimile to 605–642–4156. A summary of the meeting will be posted at *https://fsplaces.fs.fed.us/fsfiles/unit/wo/secure_rural_schools.nsf/RAC/Lawrence?OpenDocument* within 21 days of the meeting.

Meeting Accommodations: If you require sign language interpreting, assistive listening devices or other reasonable accommodation for access to the meeting please request this in advance by contacting the person listed in the section titled **FOR FURTHER INFORMATION CONTACT**. All reasonable accommodation requests are managed on a case by case basis.

Dated: August 17, 2012.

Craig Bobzien,

Forest Supervisor.

[FR Doc. 2012–20849 Filed 8–23–12; 8:45 am]

BILLING CODE 3410–11–P

ARCHITECTURAL AND TRANSPORTATION BARRIERS COMPLIANCE BOARD

Meetings

AGENCY: Architectural and Transportation Barriers Compliance Board.

ACTION: Notice of meetings.

SUMMARY: The Architectural and Transportation Barriers Compliance Board (Access Board) plans to hold its regular committee and Board meetings in Washington, DC, Monday through Wednesday, September 10–12, 2012 on the times and location listed below.

DATES: The schedule of events is as follows:

Monday, September 10, 2012

10:30 a.m.–5 p.m. Ad Hoc Rulemaking Committees: Closed to Public

Tuesday, September 11, 2012

9:30–11 a.m. Ad Hoc Committee on Frontier Issues

11–Noon Planning and Evaluation Committee
1:30–3:30 p.m. Technical Programs Committee
4–4:30 p.m. Budget Committee

Wednesday, September 12, 2012

9:30 a.m.–Noon Ad Hoc Rulemaking Committees: Closed to Public
1:30–3 p.m. Board Meeting

ADDRESSES: Meetings will be held at the Access Board Conference Room, 1331 F Street NW., suite 800, Washington, DC 20004.

FOR FURTHER INFORMATION CONTACT: For further information regarding the meetings, please contact David Capozzi, Executive Director, (202) 272–0010 (voice); (202) 272–0054 (TTY).

SUPPLEMENTARY INFORMATION: At the Board meeting scheduled on the afternoon of Wednesday, September 12, the Access Board will consider the following agenda items:

- Approval of the draft July 11, 2012 meeting minutes (vote)
- Planning and Evaluation Committee Report
- Technical Programs Committee Report
- Budget Committee Report
- Ad Hoc Committee Reports
- Executive Director's Report
- Public Comment, Open Topics

All meetings are accessible to persons with disabilities. An assistive listening system, computer assisted real-time transcription (CART), and sign language interpreters will be available at the Board meeting and committee meetings. Persons attending Board meetings are requested to refrain from using perfume, cologne, and other fragrances for the comfort of other participants (see *www.access-board.gov/about/policies/fragrance.htm* for more information).

David M. Capozzi,

Executive Director.

[FR Doc. 2012–20807 Filed 8–23–12; 8:45 am]

BILLING CODE 8150–01–P

DEPARTMENT OF COMMERCE

Submission for OMB Review; Comment Request

The Department of Commerce will submit to the Office of Management and Budget (OMB) for clearance the following proposal for collection of information under the provisions of the Paperwork Reduction Act (44 U.S.C. Chapter 35).

Agency: National Oceanic and Atmospheric Administration (NOAA).

Title: NOAA Restoration Center Performance Progress Report.

OMB Control Number: 0648–0472.

Form Number(s): NA.

Type of Request: Regular submission (extension of a current information collection).

Number of Respondents: 250.

Average Hours per Response: Semiannual reports, 7 hours, six minutes; annual reports, 52 minutes.

Burden Hours: 4,145.

Needs and Uses: This request is for a regular submission (extension of a currently approved information collection).

NOAA funds habitat restoration projects including grass-roots, community-based habitat restoration; debris prevention and removal; removal of barriers to migrating fish; and large-scale, targeted restoration through individual projects and restoration partnerships. Awards are made as grants or cooperative agreements under the authority of the Magnuson-Stevens Fishery Conservation and Management Act and the Fish and Wildlife Coordination Act, 16 U.S.C. 661, as amended by the Reorganization Plan No. 4 of 1970.

NOAA requires specific information on habitat restoration projects that are funded, as part of routine progress reporting. Recipients of NOAA funds submit information such as project location, restoration techniques used, species benefited, acres restored, stream miles opened to access for diadromous fish, volunteer participation, and other parameters.

The required information enables NOAA to track, evaluate and report on coastal and marine habitat restoration and demonstrate accountability for federal funds. This information is used to populate a database of NOAA-funded habitat restoration, debris prevention and removal, and barrier removal projects. The database, with its robust querying capabilities, is instrumental to provide accurate and timely responses to NOAA, Department of Commerce, Congressional and Constituent inquiries. It also facilitates reporting by NOAA on the Government Performance and Results Act ''acres restored'' performance measure. Grant recipients are required by the NOAA Grants Management Division to submit periodic performance reports and a final report for each award; this collection stipulates the information to be provided in these reports.

Affected Public: State, local and tribal government, not-for-profit institutions, business or other for-profit organizations.

Frequency: Annually and semiannually.

Respondent's Obligation: Required to obtain or retain benefits.

OMB Desk Officer: *OIRA_Submission@omb.eop.gov*.

Copies of the above information collection proposal can be obtained by calling or writing Jennifer Jessup, Departmental Paperwork Clearance Officer, (202) 482–0336, Department of Commerce, Room 6616, 14th and Constitution Avenue NW., Washington, DC 20230 (or via the Internet at *JJessup@doc.gov*).

Written comments and recommendations for the proposed information collection should be sent within 30 days of publication of this notice to *OIRA_Submission@omb.eop.gov*.

Dated: August 21, 2012.

Gwellnar Banks,

Management Analyst, Office of the Chief Information Officer.

[FR Doc. 2012–20862 Filed 8–23–12; 8:45 am]

BILLING CODE 3510–22–P

DEPARTMENT OF COMMERCE

International Trade Administration

[A–552–812]

Steel Wire Garment Hangers From the Socialist Republic of Vietnam: Preliminary Affirmative Determination of Critical Circumstances in the Antidumping Duty Investigation

AGENCY: Import Administration, International Trade Administration, Department of Commerce.

DATES: *Effective Date:* August 24, 2012.

FOR FURTHER INFORMATION CONTACT: Irene Gorelik at (202) 482–6905, AD/CVD Operations, Office 9, Import Administration, International Trade Administration, U.S. Department of Commerce, 14th Street and Constitution Avenue NW., Washington, DC 20230.

Background

On August 2, 2012, the Department of Commerce (''the Department'') published its preliminary determination in the antidumping duty investigation of steel wire garment hangers from the Socialist Republic of Vietnam (''Vietnam'').[1] On August 2, 2012, Petitioners[2] filed a timely critical circumstances allegation, pursuant to 19 CFR 351.206(c)(1), alleging that critical

[1] *See Steel Wire Garment Hangers From the Socialist Republic of Vietnam: Preliminary Determination of Sales at Less Than Fair Value and Postponement of Final Determination,* 77 FR 46044 (August 2, 2012) (''*Preliminary Determination*'').

[2] M&B Metal Products Company, Inc.; Innovative Fabrication LLC/Indy Hanger; and US Hanger Company, LLC.

circumstances exist with respect to imports of the merchandise under consideration. On August 2, 2012, the Department issued a letter to the TJ Group,[3] the remaining cooperative mandatory respondent, requesting monthly shipment data from August 2011 through May 2012.[4] On August 3, 2012, the TJ Group filed a letter withdrawing its participation from this investigation.[5]

In accordance with 19 CFR 351.206(c)(1), when a critical circumstances allegation is filed 30 days or more before the scheduled date of the final determination, the Department will issue a preliminary finding whether there is a reasonable basis to believe or suspect that critical circumstances exist. Because the critical circumstances allegation in this case was submitted after the preliminary determination was published, the Department must issue its preliminary findings of critical circumstances no later than 30 days after the allegation was filed.[6]

Legal Framework

Section 733(e)(1) of the Tariff Act of 1930, as amended (''the Act''), provides that the Department, upon receipt of a timely allegation of critical circumstances, will determine whether there is a reasonable basis to believe or suspect that: (A)(i) There is a history of dumping and material injury by reason of dumped imports in the United States or elsewhere of the subject merchandise, or (ii) the person by whom, or for whose account, the merchandise was imported knew or should have known that the exporter was selling the subject merchandise at less than its fair value and that there was likely to be material injury by reason of such sales; and (B) there have been massive imports of the subject merchandise over a relatively short period.

Further, 19 CFR 351.206(h)(1) provides that, in determining whether imports of the subject merchandise have been ''massive,'' the Department normally will examine: (i) The volume and value of the imports; (ii) seasonal trends; and (iii) the share of domestic consumption accounted for by the imports. In addition, 19 CFR 351.206(h)(2) provides that, ''{i}n general, unless the imports during the 'relatively short period' * * * have increased by at least 15 percent over the imports during an immediately preceding period of comparable duration, the Secretary will not consider the imports massive.'' 19 CFR 351.206(i) defines ''relatively short period'' generally as the period starting on the date the proceeding begins (*i.e.,* the date the petition is filed) and ending at least three months later. This section of the regulations further provides that, if the Department ''finds that importers, or exporters or producers, had reason to believe, at some time prior to the beginning of the proceeding, that a proceeding was likely,'' then the Department may consider a period of not less than three months from that earlier time.

Critical Circumstances Allegation

In their allegation, Petitioners contend that, based on the dumping margins assigned by the Department in the *Preliminary Determination,* importers knew or should have known that the merchandise under consideration was being sold at less than fair value (''LTFV'').[7] Petitioners also contend that, based on the preliminary determination of injury by the U.S. International Trade Commission (''ITC''), there is a reasonable basis to impute importers' knowledge that material injury is likely by reason of such imports.[8] Finally, as part of their allegation and pursuant to 19 CFR 351.206(h)(2), Petitioners submitted import statistics for the ''like product'' covered by the scope of this investigation for the period between August 2011 and May 2012, as evidence of massive imports of garment hangers from Vietnam during a relatively short period.[9]

Analysis

The Department's normal practice in determining whether critical circumstances exist pursuant to the statutory criteria has been to examine evidence available to the Department, such as: (1) The evidence presented in Petitioners' critical circumstances allegation; (2) import statistics released by the ITC; and (3) shipment information submitted to the Department by the respondents selected for individual examination.[10] As further provided below, in determining whether the above statutory criteria have been satisfied in this case, we have examined: (1) The evidence presented in Petitioners' August 2, 2012, allegation; (2) information obtained since the initiation of this investigation; and (3) the ITC's preliminary injury determination.

Section 733(e)(1)(A)(i) of the Act: History of Dumping and Material Injury by Reason of Dumped Imports in the United States or Elsewhere of the Subject Merchandise

In determining whether a history of dumping and material injury exists, the Department generally has considered current or previous antidumping duty orders on subject merchandise from the country in question in the United States and current orders in any other country.[11] In this case, the current investigation of the subject merchandise marks the first instance that the Department has examined whether the goods are dumped into the United States. As a result, the Department previously has not imposed an antidumping duty order on the subject merchandise. Moreover, the Department is not aware of any antidumping duty order on subject merchandise from Vietnam in another country. Therefore, the Department finds no history of injurious dumping of the subject merchandise pursuant to section 733(e)(1)(A)(i) of the Act.

Section 733(e)(1)(A)(ii): The Importer Knew or Should Have Known That Exporter Was Selling at Less Than Fair Value and That There Was Likely To Be Material Injury

In determining whether an importer knew or should have known that the exporter was selling subject merchandise at LTFV and that there was likely to be material injury by reason of such sales, the Department must rely on the facts before it at the time the determination is made. The Department generally bases its decision with respect to knowledge on the margins calculated in the preliminary determination and the ITC's preliminary injury determination.

The Department normally considers margins of 25 percent or more for export price sales and 15 percent or more for constructed export price sales sufficient to impute importer knowledge of sales

[3] The TJ Group consists of: the Pre-Supreme Entity, Infinite Industrial Hanger Limited, and TJ Co., Ltd. *See, e.g., Preliminary Determination,* 77 FR at 46047–48, 46053 n. 109.

[4] *See* Department's letter to the TJ Group, dated August 2, 2012, at 1–2.

[5] *See* TJ Group's Letter of Withdrawal, dated August 3, 2012, at 1–2.

[6] *See* 19 CFR 351.206(c)(2)(ii).

[7] *See* Petitioners' Critical Circumstances Allegation, dated August 2, 2012, at 2–3.

[8] *See id.* at 3–4.

[9] *See id.* at 4–5, Attachment 1.

[10] *See, e.g., Notice of Final Determination of Sales at Less Than Fair Value and Affirmative Final Determination of Critical Circumstances: Circular Welded Carbon Quality Steel Pipe from the People's Republic of China,* 73 FR 31970, 31972–73 (June 5, 2008) (''*Carbon Steel Pipe*''); *Final Determination of Sales at Less Than Fair Value and Affirmative Determination of Critical Circumstances: Small Diameter Graphite Electrodes from the People's Republic of China,* 74 FR 2049, 2052–53 (January 14, 2009) (''*SDGE*'').

[11] *See Carbon Steel Pipe,* 73 FR at 31972–73; *SDGE,* 74 FR 2052–53.

at LTFV.[12] The Department preliminarily determined a margin of 135.81 percent for the TJ Group, which was also assigned as the separate rate to the non-selected separate rate applicants.[13] Additionally, the Department preliminarily assigned a margin of 187.51 percent, as adverse facts available (''AFA'') to the Vietnam-wide entity, which includes one of the mandatory respondents, South East Asia Hamico Export Joint Stock Company (''Hamico'').[14] Therefore, because the preliminary margins are greater than 25 percent for all producers and exporters, we preliminarily find, with respect to all producers and exporters, that there is a reasonable basis to believe or suspect that importers knew, or should have known, that exporters were selling the merchandise under consideration at LTFV.

In determining whether an importer knew or should have known that there was likely to be material injury caused by reason of such imports, the Department normally will look to the preliminary injury determination of the ITC.[15] If the ITC finds a reasonable indication of present material injury to the relevant U.S. industry, the Department will determine that a reasonable basis exists to impute importer knowledge that material injury is likely by reason of such imports.[16] Here, the ITC found that ''there is a reasonable indication that an industry in the United States is materially injured by reason of imports from Taiwan and Vietnam of steel wire garment hangers, provided for in subheading 7326.20.00 of the Harmonized Tariff Schedule of the United States * * *.''[17]

Section 733(e)(1)(B): Whether There Have Been Massive Imports of the Subject Merchandise Over a Relatively Short Period

Pursuant to 19 CFR 351.206(h)(2), the Department will not consider imports to be massive unless imports in the comparison period have increased by at least 15 percent over imports in the base period. The Department normally considers a ''relatively short period'' as the period beginning on the date the proceeding begins and ending at least three months later.[18] For this reason, the Department normally compares the import volumes of the subject merchandise for at least three months immediately preceding the filing of the petition (*i.e.,* the ''base period'') to a comparable period of at least three months following the filing of the petition (*i.e.,* the ''comparison period'').[19]

In their August 2, 2012, allegation, Petitioners maintained that importers, exporters, or foreign producers gained knowledge that this proceeding was possible when the petition for an antidumping duty investigation was filed on December 29, 2011.[20] Petitioners noted that when a petition is filed in the second half of a month, the month following the filing is treated as part of the post-petition period.[21] Petitioners also included in their allegation U.S. import data collected from the ITC's Dataweb.[22] Based on this data, Petitioners provided data for a five-month base period (August 2011 through December 2011) and a five-month comparison period (January 2012 through May 2012), the most recent data available at the time of filing, in showing whether imports were massive.[23] Therefore, based on the date of the filing of the petition, *i.e.,* December 29, 2012, which was in the second half of the month, the Department agrees with Petitioners that January 2012 is the month in which importers, exporters, or producers knew or should have known an antidumping duty investigation was likely, and falls within the comparison period. We also agree that using a five-month base period and a five-month comparison period for import analysis is reasonable, as the ITC's Dataweb contained data up through May 2012, at the time of filing.[24]

The TJ Group

It has been the Department's practice to conduct its massive imports analysis based on the experience of investigated companies, using the reported monthly shipment data for the base and comparison periods.[25] However, as noted above, on August 3, 2012, the TJ Group withdrew its participation from this investigation, thus it did not respond to the Department's request for monthly shipment data for the base and comparison periods.[26] Therefore, the Department preliminarily determines that pursuant to sections 776(a)(2)(A) and (C) of the Act, use of the facts otherwise available are necessary in reaching the applicable determination under this title with respect to the TJ Group.

Furthermore, section 776(b) of the Act provides that, if a party has failed to act to the best of its ability, the Department may apply an adverse inference. The TJ Group withdrew its participation from this investigation and from the scheduled verification of its books and records. Thus, we are using facts available, in accordance with section 776(a) of the Act and, pursuant to section 776(b) of the Act, we also find that AFA is warranted so that the TJ Group does not obtain a more favorable result by failing to cooperate than if it had fully cooperated. Accordingly, we preliminarily find that there were massive imports of merchandise from the TJ Group, pursuant to our practice.[27]

Separate Rate Respondents

It has also been the Department's practice to conduct its massive imports analysis of the separate rate respondents based on the experience of investigated companies.[28] Thus, we did not request monthly shipment information from the three separate rate respondents. However, where mandatory respondents received AFA, we have not imputed adverse inferences of massive imports to the non-individually examined

[12] *See, e.g., Carbon and Alloy Steel Wire Rod From Germany, Mexico, Moldova, Trinidad and Tobago, and Ukraine: Preliminary Determination of Critical Circumstances,* 67 FR 6224, 6225 (February 11, 2002); *Affirmative Preliminary Determination of Critical Circumstances: Magnesium Metal from the People's Republic of China,* 70 FR 5606, 5607 (February 3, 2005).

[13] *See Preliminary Determination,* 77 FR at 46053.

[14] *See id.*

[15] *See, e.g., Certain Potassium Phosphate Salts from the People's Republic of China: Preliminary Affirmative Determination of Critical Circumstances in the Antidumping Duty Investigation,* 75 FR 24572, 24573 (May 5, 2010) (''*Salt Critical Circumstances Prelim*'').

[16] *See, e.g., Carbon and Alloy Steel Wire Rod From Germany, Mexico, Moldova, Trinidad and Tobago, and Ukraine: Preliminary Determination of Critical Circumstances,* 67 FR 6224, 6225 (February 11, 2002); *Affirmative Preliminary Determination of Critical Circumstances: Magnesium Metal from the People's Republic of China,* 70 FR 5606, 5607 (February 3, 2005).

[17] *See Steel Wire Garment Hangers from Taiwan and Vietnam,* Investigation Nos. 701–TA–487 and 731–TA–1197–1198 (Preliminary), 77 FR 9701 (February 17, 2012) (''*ITC Prelim*'').

[18] *See* 19 CFR 351.206(i).

[19] *See Salt Critical Circumstances Prelim,* 75 FR at 24574.

[20] *See* Petitioners' Critical Circumstances Allegation dated August 2, 2012, at 4.

[21] *See id.* at 4.

[22] *See id.* at 5.

[23] *See id.* at Attachment 1. At the time of filing, import data was available only through May 2012.

[24] *See* ''Memorandum to the File, from Irene Gorelik, Analyst, Office 9; Antidumping Duty Investigation of Steel Wire Garment Hangers from the Socialist Republic of Vietnam: Preliminary Affirmative Critical Circumstances Memorandum,'' (''Dataweb Memo'') dated concurrently with this notice at Exhibits I–II; *see also* Petitioners' Critical Circumstances Allegation at Attachment I.

[25] *See, e.g., Carbon Steel Pipe, 73 FR at* 31972–73; *SDGE,* 74 FR 2052–53.

[26] *See* the Department's letter to the TJ Group dated August 2, 2012; *see also* TJ Group's Letter of Withdrawal dated August 3, 2012.

[27] *See SDGE,* 74 FR at 2052–2053.

[28] *See, e.g., Salt Critical Circumstances Prelim,* 75 FR at 24575; *Carbon Steel Pipe,* 73 FR at 31972–73; and *SDGE,* 74 FR at 2053.

companies receiving a separate rate. Instead, the Department has relied upon the ITC's Dataweb import statistics, where appropriate, in determining whether there have been massive imports for the separate rate respondents. Accordingly, as the basis for determining whether imports were massive for these separate rate respondents, we are relying on the ITC's Dataweb import statistics as evidence that imports in the post-petition period were massive for those companies. As stated above, in this case, the ITC's Dataweb import volume data shows an increase of 19.62 percent of steel wire garment hanger imports from Vietnam during the comparison period.[29] Thus, pursuant to 19 CFR 351.206(h), we determine that this increase, being greater than 15 percent, shows that imports in the five-month comparison period were massive for the separate rate respondents.

Vietnam-Wide Entity (Including Hamico) and the Application of AFA

In this investigation, the Department selected Hamico and the TJ Group as mandatory respondents for individual examination.[30] In the *Preliminary Determination,* the Department determined that there were exporters/producers of the merchandise under investigation during the period of investigation from Vietnam, including Hamico,[31] that either: (1) Did not respond to the Department's request for information, or (2) failed to provide information that was not available on the record but necessary to calculate an accurate dumping margin. Therefore, pursuant to 776(a)(2)(A), (B), and (C) of the Act we treated these Vietnamese exporters/producers, including Hamico, as part of the Vietnam-wide entity because they did not qualify for a separate rate.[32]

Further, information on the record indicates that the Vietnam-wide entity was non-cooperative because certain companies did not respond to our requests for information.[33] As a result, pursuant to section 776(b) of the Act, we preliminarily found that the use of AFA was warranted to determine the Vietnam-wide rate.[34] As AFA, we preliminarily assigned to the Vietnam-wide entity a rate of 187.51 percent, which is the highest transaction-specific rate calculated for the TJ Group.[35]

Because the Vietnam-wide entity has been unresponsive for the duration of the proceeding, the record does not contain shipment data from the Vietnam-wide entity for purposes of our critical circumstances analysis. Therefore, there is no verifiable information on the record with respect to the Vietnam-wide entity's base and comparison period shipment volumes. Section 776(a)(2) of the Act provides that, if an interested party or any other person (A) withholds information that has been requested by the administering authority or the Commission under this title, (B) fails to provide such information by the deadlines for submission of the information or in the form and manner requested, subject to subsections (c)(1) and (e) of section 782, (C) significantly impedes a proceeding under this title, or (D) provides such information but the information cannot be verified as provided in section 782(i), the administering authority and the Commission shall, subject to section 782(d), use the facts otherwise available in reaching the applicable determination under this title.

Furthermore, section 776(b) of the Act provides that, if a party has failed to act to the best of its ability, the Department may apply an adverse inference. The Vietnam-wide entity has been non-cooperative during the entire proceeding.[36] Thus, we are using facts available, in accordance with section 776(a) of the Act, and, pursuant to section 776(b) of the Act, we also find that AFA is warranted so that the Vietnam-wide entity does not obtain a more favorable result by failing to cooperate than if it had fully cooperated. Accordingly, as we have done under similar factual scenarios in other proceedings, we preliminarily find that there were massive imports of merchandise from the Vietnam-wide entity.[37]

Preliminary Affirmative Determination of Critical Circumstances

Record evidence indicates that importers of steel wire garment hangers knew, or should have known, that exporters were selling the merchandise at LTFV, and that there was likely to be material injury by reason of such sales. In addition, we have imputed that the Vietnam-wide entity and the TJ Group has massive imports during a relatively short period. Lastly, record evidence shows that the separate rate respondents had massive imports during a relatively short period. Therefore, in accordance with section 733(e)(1) of the Act, we preliminarily find that there is reason to believe or suspect that critical circumstances exist for imports of the merchandise under consideration from the Vietnam-wide entity (which includes Hamico), the TJ Group, and the separate rate respondents (CTN Limited Company, Ju Fu Co., Ltd., and Triloan Hangers, Inc.) in this antidumping duty investigation.[38]

Suspension of Liquidation

In accordance with section 703(e)(2)(A) of the Act, we are directing the U.S. Customs and Border Protection to suspend liquidation of any unliquidated entries of the merchandise under consideration from Vietnam entered, or withdrawn from warehouse for consumption, on or after May 4, 2012, which is 90 days prior to the date of publication of the *Preliminary Determination* in the **Federal Register**.

ITC Notification

In accordance with section 733(f) of the Act, we have notified the ITC of our preliminary affirmative critical circumstances determination.

Public Comment

In the *Preliminary Determination,* the Department stated that case briefs or other written comments may be submitted to the Assistant Secretary for Import Administration no later than seven days after the date the final verification report is issued.[39] However, as noted above, the TJ Group withdrew from participation in this investigation, including the scheduled verification. Consequently, as there were no other verifications scheduled for this proceeding, the Department is setting the public comment deadline herein. Therefore, case briefs addressing any issues in the *Preliminary Determination* or this preliminary affirmative determination of critical circumstances

[29] *See* Dataweb Memo at Exhibits I–II; *see also* Petitioners' Critical Circumstances Allegation at Attachment I.

[30] *See* "Memorandum to Christian Marsh, Deputy Assistant Secretary for Antidumping and Countervailing Duty Operations, from James C. Doyle, Director, Office 9; Antidumping Duty Investigation of Steel Wire Garment Hangers from the Socialist Republic of Vietnam: Respondent Selection," dated February 16, 2012.

[31] We preliminarily found that Hamico failed to provide the information requested by the Department in a timely manner and in the form required, and significantly impeded the Department's ability to calculate an accurate margin. The Department was unable to calculate a margin without the necessary information, requiring the application of facts otherwise available to Hamico for the purpose of the *Preliminary Determination. See Preliminary Determination,* 77 FR at 46049–51.

[32] *See id.*

[33] *See id.*

[34] *See id.*

[35] *See id.,* 77 FR at 46053.

[36] *See id.*

[37] *See, e.g., Salt Critical Circumstances Prelim,* 75 FR at 24572–24573.

[38] *See* section 733(f) of the Act; 19 CFR 351.206(c)(2)(ii).

[39] *See Preliminary Determination,* 77 FR at 46054.

may be submitted to the Assistant Secretary for Import Administration no later than seven days after the publication date of this notice. Rebuttal briefs, limited to issues raised in case briefs, are due no later than five days after the deadline for submitting case briefs.[40] A list of authorities used and an executive summary of issues should accompany any briefs submitted to the Department. This summary should be limited to five pages total, including footnotes. All submissions to the Department, including case briefs and rebuttal briefs, must be filed electronically using Import Administration's Antidumping and Countervailing Duty Centralized Electronic Service System (''IA ACCESS''). An electronically filed document must be received successfully in its entirety by the Department's electronic records system, IA ACCESS, by 5 p.m. Eastern Standard Time, on the date of the established deadline, if applicable. Finally, this notice is a public document and is on file electronically via IA ACCESS. IA ACCESS is available to registered users at *http://iaaccess.trade.gov* and in the Central Records Unit, room 7046 of the main Department of Commerce building.

This determination is published pursuant to sections 733(f) and 777(i) of the Act and 19 CFR 351.206(c)(2)(ii).

Dated: August 20, 2012.

Paul Piquado,

Assistant Secretary for Import Administration.

[FR Doc. 2012–20911 Filed 8–23–12; 8:45 am]

BILLING CODE 3510–DS–P

[40] *See* 19 CFR 351.309(c)(1)(i), (d)(1).

DEPARTMENT OF COMMERCE

National Institute of Standards and Technology

[Docket Number 120706223–2223–01]

Alternative Personnel Management System (APMS) at the National Institute of Standards and Technology

AGENCY: National Institute of Standards and Technology, Department of Commerce.

ACTION: Notice.

SUMMARY: This notice announces changes to existing provisions of the National Institute of Standards and Technology's (NIST) Alternative Personnel Management System (APMS). NIST will pilot direct-hire authority for a period of one year from the publication date of this notice, for all positions in the General Engineering, 801 series and General Physical Science, 1301 series.

DATES: The direct-hire authority pilot program will begin on August 24, 2012, until August 24, 2013.

FOR FURTHER INFORMATION CONTACT: Susanne Porch at the National Institute of Standards and Technology, (301) 975–3000; or Valerie Smith at the U.S. Department of Commerce, (202) 482–0272.

SUPPLEMENTARY INFORMATION:

Background

In accordance with Public Law 99–574, the National Bureau of Standards Authorization Act for Fiscal Year 1987, the Office of Personnel Management (OPM) approved a demonstration project plan, ''Alternative Personnel Management System (APMS) at the National Institute of Standards and Technology (NIST),'' and published the plan in the **Federal Register** on October 2, 1987 (52 FR 37082). The project plan has been modified twice, on May 17, 1989 (54 FR 21331) and Sept. 25, 1990 (55 FR 39220), to clarify certain NIST authorities. The project plan and subsequent amendments were consolidated in the final APMS plan, which became permanent on October 21, 1997 (62 FR 54604). NIST first amended the plan on May 6, 2005 (70 FR 23996), to strengthen the link between pay and performance, to simplify the pay-for-performance system, and to broaden the link between performance and retention service credit for reduction in force, which became effective upon the date of publication. NIST amended the plan again on July 15, 2008 (73 FR 40500), to improve flexibility in rewarding new and mid-level employees and to broaden the ability to make performance distinctions, and that amendment became permanent on October 1, 2008.

On December 3, 2010, the Department of Commerce approved NIST's request to pilot direct-hire under 5 U.S.C. 3304(a)(3) for a period of one year for all positions within the Scientific and Engineering (ZP) career path at the Pay Band III and above, for Nuclear Reactor Operator positions in the Scientific and Engineering Technician (ZT) career path at Pay Band III and above, and for all occupations for which there is a special rate under the General Schedule (GS) pay system. On January 5, 2011, NIST published a **Federal Register** notice (76 FR 539) announcing that the agency would be implementing the direct-hire pilot for a period of one year. During the pilot, information was gathered on the impact of direct-hire authority on preference eligibles, as well as information supporting the finding of a severe shortage of candidates for the positions covered under the direct-hire authority.

On December 20, 2011, NIST published a **Federal Register** notice (76 FR 78889) extending the direct-hire pilot for an additional six (6) months. During this extended pilot period, NIST submitted a request to the Department of Commerce to implement direct-hire authority under 5 U.S.C. 3304(a)(3) on a permanent basis for Nuclear Reactor Operator positions in NIST's Scientific and Engineering Technician (ZT) career path at the Pay Band III and above, and for all positions in NIST's Scientific and Engineering (ZP) career path at the Pay Band III and above except for the Information Technology Management, 2210 series; the General Engineering, 801 series; and the General Physical Science, 1301 series. The request included a statistical analysis determining the impact of direct-hire authority on preference eligibles as well as a justification supporting the finding of a severe shortage of candidates in the covered positions.

On April 20, 2012, the Department of Commerce, in consultation with the Office of Personnel Management, approved NIST's request to implement direct-hire authority on a permanent basis for the above occupations. The Department of Commerce also granted NIST approval to pilot direct-hire authority under 5 U.S.C. 3304(a)(3) for all positions in the General Engineering, 801 series and the General Physical Science, 1301 series.

The APMS plan provides for modifications to be made as experience is gained, results are analyzed, and conclusions are reached on how the system is working. This notice formally announces the modification to the APMS plan to implement direct-hire procedures under 5 U.S.C. 3304(a)(3) on a pilot basis for twelve (12) months. During this pilot period, NIST will gather data on the impact of direct-hire authority on preference eligibles. NIST will also include data from the previous pilot's expiration date of June 5, 2012. If additional time is required to complete review of the data, the pilot may be extended for an additional six (6) months.

Dated: August 2, 2012.

David Robinson,

Associate Director for Management Resources.

Table of Contents

I. Executive Summary
II. Basis for APMS Plan Modification

III. Changes to the APMS Plan

I. Executive Summary

The National Institute of Standards and Technology's (NIST) Alternative Personnel Management System (APMS) is designed to (1) improve hiring and allow NIST to compete more effectively for high-quality researchers through direct hiring, selective use of higher entry salaries, and selective use of recruiting allowances; (2) motivate and retain staff through higher pay potential, pay-for-performance, more responsive personnel systems, and selective use of retention allowances; (3) strengthen the manager's role in personnel management through delegation of personnel authorities; and (4) increase the efficiency of personnel systems through installation of a simpler and more flexible classification system based on pay banding through reduction of guidelines, steps, and paperwork in classification, hiring, and other personnel systems, and through automation.

Since implementing the APMS in 1987, according to findings in the Office of Personnel Management's ''Summative Evaluation Report National Institute of Standards and Technology Demonstration Project: 1988–1995,'' NIST has accomplished the following: NIST is more competitive for talent; NIST retained more top performers than a comparison group; and NIST managers reported significantly more authority to make decisions concerning employee pay. This modification builds on this success by piloting direct-hire authority for the General Engineering, 801 series and General Physical Science, 1301 series under 5 U.S.C. 3304(a)(3) for a period of twelve (12) months.

This amendment modifies the October 21, 1997 **Federal Register** notice. Specifically, it enables NIST to hire, after public notice is given, any qualified applicant without regard to 5 U.S.C. 3309–3318, 5 CFR part 211, or 5 CFR part 337, subpart A for a period of twelve (12) months. During this pilot period, NIST will gather data on the impact of direct-hire authority on preference eligibles. NIST will also include data from the previous pilot's expiration date of June 5, 2012. If additional time is required to complete a review of the data, the pilot may be extended for an additional six (6) months.

NIST will continually monitor the effectiveness of this amendment.

II. Basis for APMS Plan Modification

Section 3304(a)(3) of title 5, United States Code, provides agencies with the authority to appoint candidates directly to jobs for which OPM determines that there is a severe shortage of candidates or a critical hiring need.

OPM's direct-hire authority enables agencies to hire, after public notice is given, any qualified application without regard to 5 U.S.C. 3309–3318, 5 CFR part 211, or 5 CFR part 337, subpart A. NIST's APMS allows the NIST Director to modify procedures if no new waiver from law or regulation is added. Given this modification is in accordance with existing law and regulation, the NIST Director is authorized to make the changes described in this notice. The modification to our final **Federal Register** notice, dated October 21, 1997, with respect to our Staffing authorities is provided below.

In 1987, with the approval of the NIST APMS (52 FR 37082), and in 1997, when the APMS plan was modified (62 FR 54604), OPM concurred that all occupations in the ZP career path at the Pay Band III and above constitute a shortage category; Nuclear Reactor Operator positions in the ZT Career Path at the Pay Band III and above constitute a shortage category; and all occupations for which there is a special rate under the General Schedule pay system constitute a shortage category.

III. Changes in the APMS Plan

The APMS at NIST, published in the **Federal Register** on October 21, 1997 (62 FR 54604) is amended as follows.

1. The information under the subsection titled: ''Direct Hire: Critical Shortage Occupations'' is replaced with:

NIST uses direct-hire procedures for categories of occupations which require skills that are in short supply. All Nuclear Reactor Operator positions at the Pay Band III and above in the ZT Career Path constitute a shortage category, and all occupations at the Pay Band III and above in the ZP Career Path constitute a shortage category except for the Information Technology Management, 2210 series; the General Engineering, 801 series; and the General Physical Science, 1301 series. NIST will pilot direct-hire procedures for the General Engineering, 801 series and the General Physical Science, 1301 series for a period of twelve (12) months. Any positions in these categories may be filled through direct-hire procedures in accordance with 5 U.S.C. 3304(a)(3). NIST advertises the availability of job opportunities in direct-hire occupations by posting on the OPM USAJOBS Web site. NIST will follow internal direct-hire procedures for accepting applications.

NIST intends to publish a consolidated plan that reflects all amendments to the APMS in FY13.

[FR Doc. 2012–20919 Filed 8–23–12; 8:45 am]

BILLING CODE 3510–13–P

DEPARTMENT OF COMMERCE

National Oceanic and Atmospheric Administration

RIN 0648–XC184

Marine Mammals; File No. 17403

AGENCY: National Marine Fisheries Service (NMFS), National Oceanic and Atmospheric Administration (NOAA), Commerce.

ACTION: Notice; receipt of application.

SUMMARY: Notice is hereby given that Robert Pilley, Leighside, Bridge Road, Leighwoods, Bristol, BS8 3PB, United Kingdom, has applied in due form for a permit to conduct commercial/educational photography on bottlenose dolphins (*Tursiops truncatus*).

DATES: Written, telefaxed, or email comments must be received on or before September 24, 2012.

ADDRESSES: The application and related documents are available for review upon written request or by appointment in the following offices:

Permits and Conservation Division, Office of Protected Resources, NMFS, 1315 East-West Highway, Room 13705, Silver Spring, MD 20910; phone (301) 427–8401; fax (301) 713–0376; and

Southeast Region, NMFS, 263 13th Avenue South, Saint Petersburg, FL 33701; phone (727) 824–5312; fax (727) 824–5309.

Written comments on this application should be submitted to the Chief, Permits and Conservation Division, at the address listed above. Comments may also be submitted by facsimile to (301) 713–0376, or by email to *NMFS.Pr1Comments@noaa.gov.* Please include the File No. in the subject line of the email comment.

Those individuals requesting a public hearing should submit a written request to the Chief, Permits and Conservation Division at the address listed above. The request should set forth the specific reasons why a hearing on this application would be appropriate.

FOR FURTHER INFORMATION CONTACT: Colette Cairns or Carrie Hubard, (301) 427–8401.

SUPPLEMENTARY INFORMATION: The subject permit is requested under the authority of the Marine Mammal Protection Act of 1972, as amended (MMPA; 16 U.S.C. 1361 *et seq.*) and the regulations governing the taking and importing of marine mammals (50 CFR part 216). Section 104(c)(6) provides for photography for educational or commercial purposes involving non-endangered and non-threatened marine mammals in the wild.

Mr. Pilley requests a five-year photography permit to film bottlenose dolphin strand-feeding events in the estuaries and creeks of Bull Creek and around Hilton Head, South Carolina, and mud-plume feeding events in the waters of the Florida Keys. Filmmakers plan to use three filming platforms: a static, remotely-operated camera placed on the mudflats, a radio-controlled camera helicopter, and a radio-controlled camera boat. For both locations combined, up to 196 dolphins annually may be approached and filmed. Filming would occur over 14 days in each location. Footage would be used in two wildlife education documentaries: ''Earthflight 3D'', and ''Dolphins-Spy in the Pod'', both for the British Broadcasting Corporation and Discovery Channel.

In compliance with the National Environmental Policy Act of 1969 (42 U.S.C. 4321 *et seq.*), an initial determination has been made that the activity proposed is categorically excluded from the requirement to prepare an environmental assessment or environmental impact statement.

Concurrent with the publication of this notice in the **Federal Register**, NMFS is forwarding copies of the application to the Marine Mammal Commission and its Committee of Scientific Advisors.

Dated: August 21, 2012.

Tammy C. Adams,

Acting Chief, Permits and Conservation Division, Office of Protected Resources, National Marine Fisheries Service.

[FR Doc. 2012–20931 Filed 8–23–12; 8:45 am]

BILLING CODE 3510–22–P

DEPARTMENT OF COMMERCE

National Oceanic and Atmospheric Administration

RIN 0648–XC171

Endangered and Threatened Species; Take of Anadromous Fish

AGENCY: National Marine Fisheries Service (NMFS), National Oceanic and Atmospheric Administration (NOAA), Commerce.

ACTION: Receipt of application for scientific research and enhancement.

SUMMARY: Notice is hereby given that NMFS has received one scientific research and enhancement permit application request relating to anadromous species listed under the Endangered Species Act (ESA). The proposed research activities are intended to increase knowledge of the species and to help guide management and conservation efforts. The application and related documents may be viewed online at: *https://apps.nmfs.noaa.gov/preview/preview_open_for_comment.cfm*. These documents are also available upon written request or by appointment by contacting NMFS by phone (916) 930–3607 or fax (916) 930–3629.

DATES: Written comments on the permit applications must be received at the appropriate address or fax number (see **ADDRESSES**) no later than 5 p.m. Pacific standard time on September 24, 2012.

ADDRESSES: Written comments on either application should be submitted to the Protected Resources Division, NMFS, 650 Capitol Mall, Room 5–100, Sacramento, CA 95814. Comments may also be submitted via fax to (916) 930–3629 or by email to *FRNpermits.SR@noaa.gov*.

FOR FURTHER INFORMATION CONTACT: Amanda Cranford, Sacramento, California, ph.: 916–930–3706, email: *Amanda.Cranford@noaa.gov*.

SUPPLEMENTARY INFORMATION:

Species Covered in This Notice

This notice is relevant to federally threatened California Central Valley (CCV) steelhead (*Oncorhynchus mykiss*), threatened Central Valley (CV) spring-run Chinook salmon (*O. tshawytscha*), endangered Sacramento River (SR) winter-run Chinook salmon (*O. tshawytscha*), and threatened southern distinct population segment of North American (sDPS) green sturgeon (*Acipenser medirostris*).

Authority

Scientific research permits are issued in accordance with section 10(a)(1)(A) of the ESA of 1973 (16 U.S.C. 1531–1543) and regulations governing listed fish and wildlife permits (50 CFR parts 222–226). NMFS issues permits based on findings that such permits: (1) Are applied for in good faith; (2) if granted and exercised, would not operate to the disadvantage of the listed species which are the subject of the permits; and (3) are consistent with the purposes and policies set forth in section 2 of the ESA. The authority to take listed species is subject to conditions set forth in the permits.

Anyone requesting a hearing on the application listed in this notice should set out the specific reasons why a hearing on the application(s) would be appropriate (see **ADDRESSES**). Such hearings are held at the discretion of the Assistant Administrator for Fisheries, NMFS.

Application Received

Permit 17077

The University of California, Davis is requesting a 4-year scientific research and enhancement permit to take adult and juvenile CCV steelhead, SR winter-run Chinook salmon, CV spring-run Chinook salmon, and sDPS green sturgeon associated with research activities in the Cache Slough Complex, Sherman Lake, and Suisun Marsh in the San Francisco estuary, California. In the studies described below, researchers do not expect to kill any listed fish but a small number, up to 20 percent (equivalent to one fish), may die as an unintended result of the research activities.

The Sacramento-San Joaquin Delta is dominated by deep-water aquatic habitats that tend to support invasive fishes such as largemouth bass and not native species. Relatively little shallow water and marsh (SWM) habitat remains, although it dominated the Delta before the 1850s. In other estuaries, such areas are critical for fish reproduction, fish rearing, and fish foraging. However, in the San Francisco Estuary (SFE), there are limited data on fish usage of such habitat, in part because of the difficulty in effectively sampling SWM regions. The purpose of this project is to develop better understanding of how physical habitat, flow and other factors interact to maintain assemblages of native and non-native aquatic species in the upper SFE.

The project will span three distinct regions across the SFE: (1) The Cache-Lindsay Slough complex, (2) the Sherman Lake complex and (3) Suisun Marsh. The survey methods will be the same for each of these regions, and will include otter trawling, beach seining and electrofishing. Water quality and habitat data will be collected concurrently.

The project specifically targets splittail and other native minnow populations. Some incidental take of ESA listed salmonids and sDPS green sturgeon may be expected. All sampled fish will be placed in a bucket of aerated, ambient water, examined for responsiveness and returned to the water as soon as possible with minimal handling that will include species identification and length estimates.

Dated: August 21, 2012.

Dwayne Meadows,

Acting Chief, Endangered Species Division, Office of Protected Resources, National Marine Fisheries Service.

[FR Doc. 2012–20929 Filed 8–23–12; 8:45 am]

BILLING CODE 3510–22–P

DEPARTMENT OF COMMERCE

National Oceanic and Atmospheric Administration

RIN 0648–XC179

New England Fishery Management Council; Public Meeting

AGENCY: National Marine Fisheries Service (NMFS), National Oceanic and Atmospheric Administration (NOAA), Commerce.

ACTION: Notice; public meeting.

SUMMARY: The New England Fishery Management Council (Council) is scheduling a public meeting of its Scientific and Statistical Committee to consider actions affecting New England fisheries in the exclusive economic zone (EEZ). Recommendations from this group will be brought to the full Council for formal consideration and action, if appropriate.

DATES: This meeting will be held on Wednesday, September 12, 2012 at 9 a.m. and Thursday, September 13, 2012 at 8:30 a.m.

ADDRESSES: The meeting will be held at the Hotel Providence, 139 Mathewson Street, Providence, RI 02903; telephone: (401) 861–8000; fax: (401) 861–8002.

Council address: New England Fishery Management Council, 50 Water Street, Mill 2, Newburyport, MA 01950.

FOR FURTHER INFORMATION CONTACT: Paul J. Howard, Executive Director, New England Fishery Management Council; telephone: (978) 465–0492.

SUPPLEMENTARY INFORMATION: On Wednesday, September 12, the Scientific and Statistical Committee (SSC) will review Scallop Plan Development Team projections and develop acceptable biological catch (ABC) recommendations for fishing years 2013 and 2014. In addition, they will provide input to the Terms of Reference for a review of scallop survey methods to be conducted by the NOAA/NMFS Northeast Fisheries Science Center.

On Thursday, September 13, the SSC will continue to review groundfish stock assessments and develop ABC recommendations for fishing years 2013 through 2015 for Gulf of Maine haddock, Cape Cod/Gulf of Maine yellowtail flounder, Southern New England/Mid-Atlantic yellowtail flounder, Georges Bank yellowtail flounder, witch flounder, plaice, and Georges Bank/Gulf of Maine white hake.

Although non-emergency issues not contained in this agenda may come before this group for discussion, those issues may not be the subject of formal action during this meeting. Action will be restricted to those issues specifically listed in this notice and any issues arising after publication of this notice that require emergency action under section 305(c) of the Magnuson-Stevens Act, provided the public has been notified of the Council's intent to take final action to address the emergency.

Special Accommodations

This meeting is physically accessible to people with disabilities. Requests for sign language interpretation or other auxiliary aids should be directed to Paul J. Howard, Executive Director, at (978) 465–0492, at least 5 days prior to the meeting date.

Authority: 16 U.S.C. 1801 *et seq.*

Dated: August 21, 2012.

William D. Chappell,

Acting Deputy Director, Office of Sustainable Fisheries, National Marine Fisheries Service.

[FR Doc. 2012–20936 Filed 8–23–12; 8:45 am]

BILLING CODE 3510–22–P

DEPARTMENT OF COMMERCE

National Oceanic and Atmospheric Administration

RIN 0648–XC183

North Pacific Fishery Management Council; Public Meetings

AGENCY: National Marine Fisheries Service (NMFS), National Oceanic and Atmospheric Administration (NOAA), Commerce.

ACTION: Notice of public meetings.

SUMMARY: The North Pacific Fishery Management Council's (Council) Gulf of Alaska (GOA) and Bering Sea/Aleutian Islands (BS/AI) groundfish plan teams will meet in Seattle, WA.

DATES: The meetings will begin at 9 a.m. on Tuesday, September 11, and continue through Friday, September 14, 2012.

ADDRESSES: The meetings will be held at the Alaska Fisheries Science Center, 7600 Sand Point Way NE., Building 4, National Marine Mammal Lab Room 2039 (GOA Plan Team) and Traynor Room 2076 (BS/AI Plan Team), Seattle, WA.

Council address: North Pacific Fishery Management Council, 605 W. 4th Ave., Suite 306, Anchorage, AK 99501–2252.

FOR FURTHER INFORMATION CONTACT: Jane DiCosimo or Diana Stram, NPFMC; telephone: (907) 271–2809.

SUPPLEMENTARY INFORMATION: *Agenda:* Principal business is to recommend proposed groundfish catch specifications for 2013/14. The teams also will review status reports on various management actions, review the draft Ecosystems Considerations Chapter, and proposed changes to Bering Sea/Aleutian Island and Gulf of Alaska groundfish stock assessment models.

The Agenda is subject to change, and the latest version is posted at *http://www.alaskafisheries.noaa.gov/npfmc/PDFdocuments/meetings/GPTagenda912*.

Although non-emergency issues not contained in this agenda may come before this group for discussion, those issues may not be the subject of formal action during these meetings. Action will be restricted to those issues specifically listed in this notice and any issues arising after publication of this notice that require emergency action under section 305(c) of the Magnuson-Stevens Fishery Conservation and Management Act, provided the public has been notified of the Council's intent to take final action to address the emergency.

Special Accommodations

These meetings are physically accessible to people with disabilities. Requests for sign language interpretation or other auxiliary aids should be directed to Gail Bendixen, (907) 271–2809, at least 5 working days prior to the meeting date.

Dated: August 21, 2012.

William D. Chappell,

Acting Deputy Director, Office of Sustainable Fisheries, National Marine Fisheries Service.

[FR Doc. 2012–20933 Filed 8–23–12; 8:45 am]

BILLING CODE 3510–22–P

COMMITTEE FOR PURCHASE FROM PEOPLE WHO ARE BLIND OR SEVERELY DISABLED

Procurement List; Additions

AGENCY: Committee for Purchase From People Who Are Blind or Severely Disabled.

ACTION: Additions to the Procurement List.

SUMMARY: This action adds products and services to the Procurement List that will be furnished by nonprofit agencies employing persons who are blind or have other severe disabilities.

DATES: *Effective Date:* 9/24/2012.

ADDRESSES: Committee for Purchase From People Who Are Blind or Severely Disabled, Jefferson Plaza 2, Suite 10800, 1421 Jefferson Davis Highway, Arlington, Virginia 22202–3259.

FOR FURTHER INFORMATION CONTACT: Patricia Briscoe, Telephone: (703) 603–7740, Fax: (703) 603–0655, or email *CMTEFedReg@AbilityOne.gov.*

SUPPLEMENTARY INFORMATION:

Additions

On 5/25/2012 (77 FR 31335–31336) and 6/29/2012 (77 FR 38775–38776), the Committee for Purchase From People Who Are Blind or Severely Disabled published notices of proposed additions to the Procurement List.

After consideration of the material presented to it concerning capability of qualified nonprofit agencies to provide the products and services and impact of the additions on the current or most recent contractors, the Committee has determined that the products and services listed below are suitable for procurement by the Federal Government under 41 U.S.C. 8501–8506 and 41 CFR 51–2.4.

Regulatory Flexibility Act Certification

I certify that the following action will not have a significant impact on a substantial number of small entities. The major factors considered for this certification were:

1. The action will not result in any additional reporting, recordkeeping or other compliance requirements for small entities other than the small organizations that will furnish the products and services to the Government.

2. The action will result in authorizing small entities to furnish the products and services to the Government.

3. There are no known regulatory alternatives which would accomplish the objectives of the Javits-Wagner-O'Day Act (41 U.S.C. 8501–8506) in connection with the products and services proposed for addition to the Procurement List.

End of Certification

Accordingly, the following products and services are added to the Procurement List:

Products

NSN: 8415–MD–001–0268—Sack, Compression Stuff, Extreme Cold Weather (ECW CSS) U.S. Marine Corps, One size fits all
NPA: The Lighthouse for the Blind, Inc. (Seattle Lighthouse), Seattle, WA
Contracting Activity: Dept of the Army, W6QK ACC–APG Natick, Natick, MA
Coverage: C-List for 100% of the requirement of the U.S. Marine Corps, as aggregated by the Army Contracting Command—Aberdeen Proving Ground, Natick Contracting Division, Natick, MA.
NSN: 8950–01–E61–8129—Spice, Oregano Leaf, Whole, 6/5 oz Containers
NSN: 8950–01–E61–8133—Spice, Oregano Leaf, Whole, 3/24 oz Containers
NSN: 8950–01–E61–0664—Spice, Thyme, Ground, 6/12 oz Containers
NSN: 8950–01–E61–8136—Spice, Thyme, Leaf, Whole, 6/6 oz Containers
NSN: 8950–01–E62–2182—Spice, Basil, Leaf, Whole 3/1.62 lb Containers
NSN: 8950–01–E60–9314—Spice, Basil, Ground, 6/12 oz Containers
NSN: 8950–01–E60–9311—Spice, Blend, Poultry, 6/12 oz Containers
NSN: 8950–01–E62–0115—Spice, Blend, Curry, Powder, No MSG, 6/16 oz Containers
NSN: 8950–01–E62–0116—Spice, Blend, Santa Fe, 6/16 oz Containers
NSN: 8950–01–E62–2187—Spice, Onion, Granulated, 6/18 oz Containers
NSN: 8950–01–E62–0149—Spice, Bay Leaf, Whole, 6/2 oz Containers
NSN: 8950–00–NSH–0234—Spice, Blend, Cajun, 6/22 oz Containers
NSN: 8950–01–E61–6697—Spice, Blend, Italian Seasoning, 6/6.25 oz Containers
NSN: 8950–01–E62–2190—Spice, Blend, Italian Seasoning, 3/28 oz Containers
NSN: 8950–01–E62–2191—Spice, Pepper, Red, Crushed, 3/3.25 lb Containers
NPA: CDS Monarch, Webster, NY
Contracting Activity: Defense Logistics Agency Troop Support, Philadelphia, PA
Coverage: C-List for 100% of the requirement of the Department of Defense, as aggregated by the Defense Logistics Agency Troop Support, Philadelphia, PA.

Services

Service Type/Locations: Operation Support Service, Aberdeen Proving Ground, MD, National Ground Intelligence Center (NGIC), Rivanna Station Complex, 2055 Boulders Road, Charlottesville, VA
NPA: The Chimes, Inc., Baltimore, MD
Contracting Activity: Dept of the Army, 0002 MI CTR Contract DODAAC, Charlottesville, VA
Service Type/Location: Mess Attendant Services, 121st Air Refueling Wing, 7370 Minuteman Way, Redtail Dining Facility, Bldg. 917, Columbus, OH
NPA: First Capital Enterprises, Inc., Chillicothe, OH
Contracting Activity: Dept of the Army, W7NU USPFO Activity OH ARNG, Columbus, OH
Service Type/Location: Management of State Department High Threat Division Kit, Department of State High Threat Division (Off-site: Virginia Industries for the Blind, Charlottesville, VA), 2216 Gallows Road, Dunn Loring, VA
NPA: Virginia Industries for the Blind, Charlottesville, VA
Contracting Activity: Department of State, DS Office of Acquisition MGMT, Arlington, VA

Patricia Briscoe,

Deputy Director, Business Operations, (Pricing and Information Management).

[FR Doc. 2012–20844 Filed 8–23–12; 8:45 am]

BILLING CODE 6353–01–P

COMMITTEE FOR PURCHASE FROM PEOPLE WHO ARE BLIND OR SEVERELY DISABLED

Procurement List Proposed Additions

AGENCY: Committee for Purchase From People Who Are Blind or Severely Disabled.

ACTION: Proposed additions to the Procurement List.

SUMMARY: The Committee is proposing to add products and a service to the Procurement List that will be furnished by nonprofit agencies employing persons who are blind or have other severe disabilities.

Comments Must be Received on or Before: 9/24/2012.

ADDRESSES: Committee for Purchase From People Who Are Blind or Severely Disabled, Jefferson Plaza 2, Suite 10800, 1421 Jefferson Davis Highway, Arlington, Virginia 22202–3259.

For Further Information or to Submit Comments Contact: Patricia Briscoe, Telephone: (703) 603–7740, Fax: (703) 603–0655, or email *CMTEFedReg@AbilityOne.gov*.

SUPPLEMENTARY INFORMATION: This notice is published pursuant to 41 U.S.C. 8503(a)(2) and 41 CFR 51–2.3. Its purpose is to provide interested persons an opportunity to submit comments on the proposed actions.

Additions

If the Committee approves the proposed additions, the entities of the Federal Government identified in this notice will be required to procure the products and service listed below from nonprofit agencies employing persons who are blind or have other severe disabilities.

Regulatory Flexibility Act Certification

I certify that the following action will not have a significant impact on a substantial number of small entities. The major factors considered for this certification were:

1. If approved, the action will not result in any additional reporting, recordkeeping or other compliance requirements for small entities other than the small organizations that will furnish the products and service to the Government.

2. If approved, the action will result in authorizing small entities to furnish the products and service to the Government.

3. There are no known regulatory alternatives which would accomplish the objectives of the Javits-Wagner-O'Day Act (41 U.S.C. 8501–8506) in connection with the products and

service proposed for addition to the Procurement List.

Comments on this certification are invited. Commenters should identify the statement(s) underlying the certification on which they are providing additional information.

End of Certification

The following products and service are proposed for addition to the Procurement List for production by the nonprofit agencies listed:

Products

NSN: 9905–00–NIB–0343—Tape, Barricade, Yellow, ''CAUTION'', Economy Grade, 3″W x 1000′L
NSN: 9905–00–NIB–0344—Tape, Barricade, Yellow, ''CAUTION'', Premium Grade, 3″W x 1000′L
COVERAGE: A-List for the Total Government Requirement as aggregated by the General Services Administration.
NSN: 9905–00–NIB–0342—Tape, Barricade, Red, ''DANGER'', Economy Grade, 3″W x 1000′L
COVERAGE: B-List for the Broad Government Requirement as aggregated by the General Services Administration.
NPA: West Texas Lighthouse for the Blind, San Angelo, TX
Contracting Activity: General Services Administration, Fort Worth, TX

Service

Service Type/Location: Administrative Service, U.S. Army MEDCOM Northern Region Contracting Office, 6021 5th Street, Building 1467, Fort Belvoir, VA.
NPA: Able Force, Inc., Tampa, FL
Contracting Activity: Dept. of the Army, W40M Natl Region Contract OFC, Fort Belvoir, VA

Patricia Briscoe,

Deputy Director, Business Operations (Pricing and Information Management).

[FR Doc. 2012–20845 Filed 8–23–12; 8:45 am]

BILLING CODE 6353–01–P

COUNCIL OF THE INSPECTORS GENERAL ON INTEGRITY AND EFFICIENCY

Senior Executive Service Performance Review Board Membership

AGENCY: Council of the Inspectors General on Integrity and Efficiency.

ACTION: Notice.

SUMMARY: This notice sets forth the names and titles of the current membership of the Council of the Inspectors General on Integrity and Efficiency (CIGIE) Performance Review Board as of October 1, 2012.

DATES: *Effective Date:* October 1, 2012.

FOR FURTHER INFORMATION CONTACT: Individual Offices of Inspectors General at the telephone numbers listed below.

SUPPLEMENTARY INFORMATION:

I. Background

The Inspector General Act of 1978, as amended, created the Offices of Inspectors General as independent and objective units to conduct and supervise audits and investigations relating to Federal programs and operations. The Inspector General Reform Act of 2008, established the Council of the Inspectors General on Integrity and Efficiency (CIGIE) to address integrity, economy, and effectiveness issues that transcend individual Government agencies; and increase the professionalism and effectiveness of personnel by developing policies, standards, and approaches to aid in the establishment of a well-trained and highly skilled workforce in the Offices of Inspectors General. The CIGIE is an interagency council whose executive chair is the Deputy Director for Management, Office of Management and Budget, and is comprised principally of the 73 Inspectors General (IGs).

II. CIGIE Performance Review Board

Under 5 U.S.C. 4314(c)(1)–(5), and in accordance with regulations prescribed by the Office of Personnel Management, each agency is required to establish one or more Senior Executive Service (SES) performance review boards. The purpose of these boards is to review and evaluate the initial appraisal of a senior executive's performance by the supervisor, along with any recommendations to the appointing authority relative to the performance of the senior executive. The current members of the Council of the Inspectors General on Integrity and Efficiency Performance Review Board, as of October 1, 2012, are as follows:

Agency for International Development

Phone Number: (202) 712–1150.
CIGIE Liaison—Marcelle Davis (202) 712–1150.
Michael G. Carroll—Deputy Inspector General.
Lisa Risley—Assistant Inspector General for Investigations.
Melinda Dempsey—Deputy Assistant Inspector General for Audits.
Lisa McClennon—Deputy Assistant Inspector General for Investigations.
Alvin A. Brown—Deputy Assistant Inspector General for Audits.
Lisa Goldfluss—Legal Counsel to the Inspector General.

Department of Agriculture

Phone Number: (202) 720–8001.
CIGIE Liaison—Dina J. Barbour (202) 720–8001.
David R. Gray—Deputy Inspector General.
Christy A. Slamowitz—Counsel to the Inspector General.
Robert W. Young—Special Assistant to the Inspector General for the Recovery Act.
Gilroy Harden—Assistant Inspector General for Audit.
Rodney G. DeSmet—Deputy Assistant Inspector General for Audit.
Tracy A. LaPoint—Deputy Assistant Inspector General for Audit.
Steven H. Rickrode, Jr.—Deputy Assistant Inspector General for Audit.
Karen L. Ellis—Assistant Inspector General for Investigations.
Kathy C. Horsley—Deputy Assistant Inspector General for Investigations.
Lane M. Timm—Assistant Inspector General for Management.

Department of Commerce

Phone Number: (202) 482–4661.
CIGIE Liaison—Justin Marsico (202) 482–9107.
Wade Green, Jr.—Counsel to the Inspector General and Associate Deputy Inspector General.
Allen Crawley—Assistant Inspector General for Systems Acquisition and IT Security.
Ronald C. Prevost—Assistant Inspector General for Economic and Statistical Program Assessment.

Department of Defense

Phone Number: (703) 604–8324.
CIGIE Liaison—John R. Crane (703) 604–8324.
Daniel R. Blair—Deputy Inspector General for Auditing.
James B. Burch—Deputy Inspector General for Investigations.
G. Tracy Burnett—Assistant Inspector General for Investigations, International Operations.
Alice F. Carey—Assistant Inspector General for Readiness and Operations Support.
Michael S. Child—Chief of Staff.
John R. Crane—Assistant Inspector General for Communications and Congressional Liaison.
Carolyn R. Davis—Assistant Inspector General for Audit Policy and Oversight.
Amy J. Frontz—Principal Assistant Inspector General for Auditing.
Marguerite C. Garrison—Deputy Inspector General for Administrative Investigations.
Lynne M. Halbrooks—Principal Deputy Inspector General.
James R. Ives—Assistant Inspector General for Investigations, Investigative Operations.
Kenneth P. Moorefield—Deputy Inspector General for Special Plans and Operations.
James L. Pavlik—Assistant Inspector General for Investigative Policy and Oversight.

Henry C. Shelley Jr.—General Counsel.
Randolph R. Stone—Deputy Inspector General for Policy and Oversight.
Ross W. Weiland—Assistant Inspector General for Investigations, Internal Operations.
Jacqueline L. Wicecarver—Assistant Inspector General for Acquisition and Contract Management.
Stephen D. Wilson—Assistant Inspector General for Administration and Management.

Department of Education

Phone Number: (202) 245–6900.
CIGIE Liaison—Teri Clark (202) 245–6340.
Mary Mitchelson—Deputy Inspector General.
Wanda Scott—Assistant Inspector General for Evaluation, Inspection, and Management Services.
Patrick Howard—Assistant Inspector General for Audit.
Vacant—Deputy Assistant Inspector General for Audit.
William Hamel—Assistant Inspector General for Investigations.
Lester Fernandez—Deputy Assistant Inspector General for Investigations.
Charles Coe—Assistant Inspector General for Information Technology Audits and Computer Crime Investigations.
Marta Erceg—Counsel to the Inspector General.

Department of Energy

Phone Number: (202) 586–4393.
CIGIE Liaison—Juston Fontaine (202) 586–1959.
John Hartman—Deputy Inspector General for Investigations.
Rickey Hass—Deputy Inspector General for Audits and Inspections.
Linda Snider—Deputy Inspector General for Management and Administration.
George Collard—Assistant Inspector General for Audits.
Sandra Bruce—Assistant Inspector General for Inspections.

Environmental Protection Agency

Phone Number: (202) 566–0847.
CIGIE Liaison—Eileen McMahon (202) 566–2546.
Charles Sheehan—Deputy Inspector General.
Aracely Nunez-Mattocks—Chief of Staff to the Inspector General.
Melissa Heist—Assistant Inspector General for Audit.
Eileen McMahon—Assistant Inspector General for Congressional, Public Affairs and Management.
Patrick Sullivan—Assistant Inspector General for Investigations.
Patricia Hill—Assistant Inspector General for Mission Systems.
Carolyn Copper—Assistant Inspector General for Program Evaluation.

General Services Administration

Phone Number: (202) 501–0450.
CIGIE Liaison—Sarah S. Breen (202) 219–1351.
Robert C. Erickson—Deputy Inspector General.
Richard P. Levi—Counsel to the Inspector General.
Theodore R. Stehney—Assistant Inspector General for Auditing.
Geoffrey Cherrington—Assistant Inspector General for Investigations.
Lee Quintyne—Deputy Assistant Inspector General for Investigations.
Larry L. Gregg—Assistant Inspector General for Administration.

Department of Health and Human Services

Phone Number: (202) 619–3148.
CIGIE Liaison—Sheri Denkensohn (202) 205–9492 and Elise Stein (202) 619–2686.
Larry Goldberg—Principal Deputy Inspector General.
Joanne Chiedi—Deputy Inspector General for Management and Policy.
Paul Johnson—Assistant Inspector General for Management and Policy (Chief Operating Officer).
Robert Owens, Jr.—Assistant Inspector General for Information Technology (Chief Information Officer).
Gary Cantrell—Deputy Inspector General for Investigations.
Jay Hodes—Assistant Inspector General for Investigations.
Stuart E. Wright—Deputy Inspector General for Evaluation and Inspections.
Greg Demske—Deputy Inspector General for Legal Affairs.
Gloria Jarmon—Deputy Inspector General for Audit Services.
Kay Daly—Assistant Inspector General for Financial Management—Regional Operations.
Brian Ritchie—Assistant Inspector General for Healthcare Audits.

Department of Homeland Security

Phone Number: (202) 254–4100.
CIGIE Liaison—Erica Paulson (202) 254–0938.
D. Michael Beard—Assistant Inspector General for Emergency Management Oversight.
Richard N. Reback—Counsel to the Inspector General.
Anne L. Richards—Assistant Inspector General for Audits.
Mark Bell—Deputy Assistant Inspector General for Audits.
John E. McCoy II—Deputy Assistant Inspector General for Audits.
Carlton I. Mann—Assistant Inspector General for Inspections.
Frank W. Deffer—Assistant Inspector General for Information Technology.
Louise M. McGlathery—Deputy Assistant Inspector General for Management.
James P. Gaughran—Deputy Assistant Inspector General for Investigations.
Wayne H. Salzgaber—Deputy Assistant Inspector General for Investigations.
Thomas M. Frost, Jr.—Assistant Inspector General for Investigations.

Department of Housing and Urban Development

Phone Number: (202) 708–0430.
CIGIE Liaison—Helen Albert (202) 708–0614, Ext. 8187.
John McCarty—Assistant Inspector General for Inspections and Evaluations.
Lester Davis—Deputy Assistant Inspector General for Investigations.
Randy McGinnis—Assistant Inspector General for Audit.
Brenda Patterson—Deputy Assistant Inspector General for Audit.
Helen Albert—Assistant Inspector General for Management and Policy.
Frank Rokosz—Deputy Assistant Inspector General for Audit.

Department of the Interior

Phone Number: (202) 208–5745.
CIGIE Liaison—Joann Gauzza (202) 208–5745.
Stephen Hardgrove—Chief of Staff.
Kimberly Elmore—Assistant Inspector General for Audits, Inspections and Evaluations.
Robert Knox—Assistant Inspector General for Investigations.
Bruce Delaplaine—General Counsel.
Roderick Anderson—Assistant Inspector General for Management.

Department of Justice

Phone Number: (202) 514–3435.
CIGIE Liaison—Jay Lerner (202) 514–3435.
Cynthia Schnedar—Deputy Inspector General.
William M. Blier—General Counsel.
Raymond J. Beaudet—Assistant Inspector General for Audit.
Carol F. Ochoa—Assistant Inspector General for Oversight and Review.
Gregory T. Peters—Assistant Inspector General for Management and Planning.
Thomas F. McLaughlin—Assistant Inspector General for Investigations.
Caryn A. Marske—Deputy Assistant Inspector General for Audit.
George L. Dorsett—Deputy Assistant Inspector General for Investigations.

Department of Labor

Phone Number: (202) 693–5100.
CIGIE Liaison—Christopher Seagle (202) 693–5231.

Nancy F. Ruiz de Gamboa—Assistant Inspector General for Management and Policy.

National Aeronautics and Space Administration

Phone Number: (202) 358–1220.
CIGIE Liaison—Renee Juhans (202) 358–1712.
Gail Robinson—Deputy Inspector General.
Frank LaRocca—Counsel to the Inspector General.
Kevin Winters—Assistant Inspector General for Investigations.
James Morrison—Assistant Inspector General for Audits.
Hugh Hurwitz—Assistant Inspector General for Management and Planning.

National Credit Union Administration

Phone Number: (703) 518–6351.
CIGIE Liaison—William DeSarno (703) 518–6351.
James Hagen—Deputy Inspector General.

National Endowment for the Arts

Phone Number: (202) 682–5774.
CIGIE Liaison—Tonie Jones (202) 682–5402.
Tonie Jones—Inspector General.

National Science Foundation

Phone Number: (703) 292–7100.
CIGIE Liaison—Susan Carnohan (703) 292–5011 & Maury Pully (703) 292–5059.
Allison C. Lerner—Inspector General.
Thomas (Tim) Cross—Deputy Inspector General.
Brett M. Baker—Assistant Inspector General for Audit.
Alan Boehm—Assistant Inspector General for Investigations.
Kenneth Chason—Assistant Inspector General for Legal, Legislative, and External Affairs.

Nuclear Regulatory Commission

Phone Number: (301) 415–5930.
CIGIE Liaison—Deborah S. Huber (301) 415–5930.
David C. Lee—Deputy Inspector General.
Stephen D. Dingbaum—Assistant Inspector General for Audits.
Joseph A. McMillan—Assistant Inspector General for Investigations.

Office of Personnel Management

Phone Number: (202) 606–1200.
CIGIE Liaison—Joyce D. Price (202) 606–2156.
Norbert E. Vint—Deputy Inspector General.
Tern Fazio—Assistant Inspector General for Management.
Michael R. Esser—Assistant Inspector General for Audits.
Michelle B. Schmitz—Assistant Inspector General for Investigations.
J. David Cope—Assistant Inspector General for Legal Affairs.
Jeffery E. Cole—Deputy Assistant Inspector General for Audits.
Kimberly A. McKinley—Deputy Assistant Inspector General for Investigations.
Melissa D. Brown—Deputy Assistant Inspector General for Audits.

Peace Corps

Phone Number: (202) 692–2900.
CIGIE Liaison—Joaquin Ferrao (202) 692–2921.
Kathy Buller—Inspector General (Foreign Service).

United States Postal Service

Phone Number: (703) 248–2100.
CIGIE Liaison—Agapi Doulaveris (703) 248–2286.
Elizabeth Martin—General Counsel.
Gladis Griffith—Deputy General Counsel.
David Sidransky—Chief, Computer Crimes.
Lance Carrington—Deputy Assistant Inspector General for Investigations—West.
Mark Duda—Deputy Assistant Inspector General for Audits—Support Operations.
Larry Koskinen—Chief Technology Officer.

Railroad Retirement Board

Phone Number: (312) 751–4690.
CIGIE Liaison—Jill Roellig (312) 751–4993.
Patricia A. Marshall—Counsel to the Inspector General.
Diana Kruel—Assistant Inspector General for Audit.

Small Business Administration

Phone Number: (202) 205–6586.
CIGIE Liaison—Robert F. Fisher (202) 205–6583.
Glenn P. Harris—Counsel to the Inspector General.
John K. Needham—Assistant Inspector General for Auditing.
Daniel J. O'Rourke—Assistant Inspector General for Investigations.
Robert F. Fisher—Assistant Inspector General for Management and Policy.

Social Security Administration

Phone Number: (410) 966–8385.
CIGIE Liaison—Misha Kelly (202) 358–6319.
Gale Stone—Deputy Assistant Inspector General for Audit.
B. Chad Bungard—Counsel to the Inspector General.
Steve Mason—Deputy Assistant Inspector General for Investigations.
Michael Robinson—Assistant Inspector General for Technology and Resource Management.

Special Inspector General for Troubled Asset Relief Program

Phone Number: (202) 622–2658.
CIGIE Liaison—(202) 622–2658.
Peggy Ellen—Deputy Special Inspector General.
Kurt Hyde—Deputy Special Inspector General, Audit.
Kimberly Caprio—Assistant Deputy Special Inspector General, Audit.
Scott Rebein—Deputy Special Inspector General, Investigations.
Thomas Kelly—Assistant Deputy Special Inspector, Investigations.
Michael Rivera—Chief Investigative Counsel
Roderick Fillinger—General Counsel.
Cathy Alix—Deputy Special Inspector General, Operations.
Mia Levine—Chief of Staff.

Department of State and the Broadcasting Board of Governors

Phone Number: (202) 663–0361.
CIGIE Liaison—Michael Wolfson (703) 284–2710.
Erich O. Hart—General Counsel.
Robert B. Peterson—Assistant Inspector General for Inspections.
Anna Gershman—Assistant Inspector General for Investigations.
Evelyn R. Klemstine—Assistant Inspector General for Audits.
Norman P. Brown—Deputy Assistant Inspector General for Audits.
Carol N. Gorman—Deputy Assistant Inspector General for Middle East Regional Office.

Department of Transportation

Phone Number: (202) 366–1959.
CIGIE Liaison—Nathan P. Richmond (202) 366–1959.
Calvin L. Scovel III—Inspector General.
Ann M. Calvaressi Barr—Deputy Inspector General.
Brian A. Dettelbach—Assistant Inspector General for Legal, Legislative, and External Affairs.
Susan L. Dailey—Assistant Inspector General for Administration.
Timothy M. Barry—Principal Assistant Inspector General for Investigations.
Robert Westbrooks—Deputy Assistant Inspector General for Investigations.
Lou E. Dixon—Principal Assistant Inspector General for Auditing and Evaluation.
Jeffrey B. Guzzetti—Assistant Inspector for Aviation and Special Program Audits.
Matthew E. Hampton—Deputy Assistant Inspector General for Aviation and Special Program Audits.

Louis King—Assistant Inspector General for Financial and Information Technology Audits.
Joseph W. Come—Assistant Inspector General for Highway and Transit Audits.
Thomas Yatsco—Deputy Assistant Inspector General for Highway and Transit Audits.
Mitchell L. Behm—Assistant Inspector General for Rail, Maritime and Economic Analysis.
Mary Kay Langan-Feirson—Assistant Inspector General for Acquisition and Procurement Audits.

Department of the Treasury

Phone Number: (202) 622–1090.
CIGIE Liaison—Tricia Hollis (202) 927–5835.
Richard K. Delmar—Counsel to the Inspector General.
Debra Ritt—Special Deputy IG for Small Business Lending Fund Program Oversight.
Tricia Hollis—Assistant Inspector General for Management.
P. Brian Crane—Assistant Inspector General for Investigations.
Marla A. Freedman—Assistant Inspector General for Audit.
Robert A. Taylor—Deputy Assistant Inspector General for Audit (Program Audits).
Joel Grover—Deputy Assistant Inspector General for Audit (Financial Management Audits).

Treasury Inspector General for Tax Administration/Department of the Treasury

Phone Number: (202) 622–6500
CIGIE Liaison—Mathew Sutphen (202) 622–6500
Michael A. Phillips—Acting Principal Deputy Inspector General.
Michael McKenney—Acting Deputy Inspector General for Audit.
Michael Delgado—Assistant Inspector General for Investigations.
Alan Duncan—Assistant Inspector General for Audit (Security & Information Technology Services).
John Fowler—Assistant Inspector General for Investigations.
David Holmgren—Deputy Inspector General for Inspections and Evaluations.
Timothy Camus—Deputy Inspector General for Investigations.
Margaret Begg—Acting Associate Inspector General for Mission Support.
Nancy Nakamura—Assistant Inspector General for Audit (Management Planning and Workforce Development).
Randy Silvis—Deputy Assistant Inspector General for Investigations.
Gladys Hernandez—Deputy Chief Counsel.
Michael McCarthy—Chief Counsel.
George Jakabcin—Chief Information Officer.

Department of Veterans Affairs

Phone Number: (202) 461–4720.
CIGIE Liaison—Joanne Moffett (202) 461–4720.
Maureen Regan—Counselor to the Inspector General.
James O'Neill—Assistant Inspector General for Investigations.
Joseph Sullivan—Deputy Assistant Inspector General for Investigations (Field Operations).
Joseph Vallowe—Deputy Assistant Inspector General for Investigations (HQs Operations).
Linda Halliday—Assistant Inspector General for Audits and Evaluations.
Sondra McCauley—Deputy Assistant Inspector General for Audits and Evaluations (HQs Management and Inspections).
Dana Moore—Assistant Inspector General for Management and Administration.
John Daigh—Assistant Inspector General for Healthcare Inspections.
Patricia Christ—Deputy Assistant Inspector General for Healthcare Inspections.

Dated: August 9, 2012.

Mark D. Jones,

Executive Director.

[FR Doc. 2012–20677 Filed 8–23–12; 8:45 am]

BILLING CODE 6820–C9–M

DEPARTMENT OF DEFENSE

Department of the Air Force

U.S. Air Force Scientific Advisory Board; Notice of Meeting

AGENCY: Department of the Air Force, U.S. Air Force Scientific Advisory Board, DoD.

ACTION: Meeting notice.

SUMMARY: Under the provisions of the Federal Advisory Committee Act of 1972 (5 U.S.C., Appendix, as amended), the Government in the Sunshine Act of 1976 (5 U.S.C. 552b, as amended), and 41 CFR 102–3.150, the Department of Defense announces that the United States Air Force Scientific Advisory Board (SAB) meeting will take place 11–12 September 2012 at the Secretary of the Air Force Technical and Analytical Support Conference Center, 1550 Crystal Drive, Arlington, VA 22202. The meeting will be from 7:45 a.m.–4:30 p.m. on Tuesday, 11 September 2012, with the sessions from 7:45 a.m.–11 a.m. and 3:30 p.m.–4:30 p.m. open to the public; and 8 a.m.–12:15 p.m. on Wednesday, 12 September 2012, with the sessions from 10:15 a.m.–11:15 p.m. open to the public. The banquet from 6 p.m.–9 p.m. on 11 September 2012 at the Crystal Gateway Marriott, 1700 Jefferson Davis Highway, Arlington VA 22202 will also be open to the public.

The purpose of this Air Force Scientific Advisory Board quarterly meeting is to introduce the FY13 SAB study topics tasked by the Secretary of the Air Force and receive presentations that address relevant subjects to the SAB mission to include introduction of the new Board members for FY13, status of FY12 studies and the FY13 Board schedule; the Air Force's science and technology needs with respect to space operations; Department of the Army acquisition and technology practices and lessons learned; latest perspectives on operations, plans, and requirements for the Air Force; future of Air Force and DoD cyberspace for assuring cyberspace advantage; Air Force Global Strike Command overview highlighting high priority capability gaps and technology solution partnerships; and intelligence, surveillance, and reconnaissance needs for contested environments.

In accordance with 5 U.S.C. 552b, as amended, and 41 CFR 102–3.155, The Administrative Assistant of the Air Force, in consultation with the Air Force General Counsel, has agreed that the public interest requires some sessions of the United States Air Force Scientific Advisory Board meeting be closed to the public because they will discuss information and matters covered by section 5 U.S.C. 552b(c)(1).

Any member of the public wishing to provide input to the United States Air Force Scientific Advisory Board should submit a written statement in accordance with 41 CFR 102–3.140(c) and section 10(a)(3) of the Federal Advisory Committee Act and the procedures described in this paragraph. Written statements can be submitted to the Designated Federal Officer at the address detailed below at any time. Statements being submitted in response to the agenda mentioned in this notice must be received by the Designated Federal Officer at the address listed below at least five calendar days prior to the meeting which is the subject of this notice. Written statements received after this date may not be provided to or considered by the United States Air Force Scientific Advisory Board until its next meeting. The Designated Federal Officer will review all timely submissions with the United States Air Force Scientific Advisory Board

Chairperson and ensure they are provided to members of the United States Air Force Scientific Advisory Board before the meeting that is the subject of this notice.

FOR FURTHER INFORMATION CONTACT: The United States Air Force Scientific Advisory Board Executive Director and Designated Federal Officer, Lt. Col. Matthew E. Zuber, 240–612–5503, United States Air Force Scientific Advisory Board, 1500 West Perimeter Road, Ste. #3300, Joint Base Andrews, MD 20762, *matthew.zuber@pentagon.af.mil.*

Henry Williams Jr.,

Acting Air Force Federal Register Liaison Officer.

[FR Doc. 2012–20841 Filed 8–23–12; 8:45 am]

BILLING CODE 5001–10–P

DEPARTMENT OF DEFENSE

Department of the Army; Corps of Engineers

Notice of Availability for the Final Environmental Impact Statement for the Proposed Widening of the Pascagoula Lower Sound/Bayou Casotte Channel, Jackson County, MS

AGENCY: Department of the Army, U.S. Army Corps of Engineers, DoD

ACTION: Notice of availability.

SUMMARY: On April 6, 2011, the Jackson County Port Authority (JCPA) submitted a joint application to the U.S. Army Corps of Engineers (Corps), Mobile District, Mississippi Department of Environmental Quality (MDEQ) and the Mississippi Department of Marine Resources (MDMR) for authorization to impact wetlands and other waters of the United States associated with the proposed widening of the Pascagoula Lower Sound/Bayou Casotte Channel (the proposed project). The proposed project is located in the Pascagoula Lower Sound/Bayou Casotte, Pascagoula, Jackson County, Mississippi (Latitude 30.365° North, Longitude 88.556° West). The Corps prepared a Draft Environmental Impact Statement (DEIS) to assess the potential environmental impacts associated with the proposed project and to promote informed decision-making by appropriate agencies; the DEIS was released April 13, 2012. The Corps is now publishing a Final Environmental Impact Statement (FEIS) to assess the potential environmental impacts associated with the proposed project. The proposed project is the dredging of approximately 38,200 feet (7.2 miles) of the existing Pascagoula Lower Sound/Bayou Casotte Channel segment to widen the channel from the Federally authorized width of 350 feet and depth of −42 feet mean lower low water (MLLW) (with 2 feet of allowable over-depth and 2 feet of advanced maintenance) to a width of 450 feet, parallel to the existing channel centerline and to the existing Federally authorized depth of −42 feet MLLW. The proposed project would include the placement of approximately 3.4 million cubic yards of dredged material resulting from the channel modification.

DATES: The Corps invites the public to comment on the Final EIS during the public comment period, which ends September 25, 2012. The Corps will consider all comments postmarked or received during the public comment period in preparing the Record of Decision and will consider late comments to the extent practicable.

Additional information on how to submit comments is included below.

FOR FURTHER INFORMATION CONTACT: Written and emailed comments to the Corps will be received until September 25, 2012. Correspondence concerning this Notice should refer to Public Notice Number SAM–2011–00389–PAH and should be directed to the U.S. Army Engineer District, RD–C–M Attention: Mr. Philip Hegji, Post Office Box 2288, Mobile, Alabama 36628–0001, via email at *philip.a.hegji@usace.army.mil* or by phone at (251) 690–3222. We encourage any additional comments from interested public, agencies and local officials. For additional information about our Regulatory Program, please visit our Web site at *www.sam.usace.army.mil/rd/reg/.*

SUPPLEMENTARY INFORMATION: The JCPA requested a Department of the Army permit pursuant to Section 10 of the Rivers and Harbors Act of 1899, Section 103 of the Marine Protection, Research and Sanctuaries Act and Section 404 of the Clean Water Act, including a Section 404(b)(1) analysis to help ensure compliance. The Corps is the lead Federal agency for the preparation of this FEIS in compliance with the requirements of the National Environmental Policy Act (NEPA) and the President's Council on Environmental Quality regulations for implementing NEPA. The National Marine Fisheries Service and the U.S. Coast Guard are cooperating agencies for the preparation of the EIS.

Dated: August 15, 2012.

Craig J. Litteken,

Chief, Regulatory Division.

[FR Doc. 2012–20942 Filed 8–23–12; 8:45 am]

BILLING CODE 3720–58–P

DEPARTMENT OF DEFENSE

Department of the Navy

Notice of Extension of Public Comment Period for the Draft Environmental Impact Statement for the Proposed Modernization and Expansion of Townsend Bombing Range, Georgia

AGENCY: Department of the Navy, DoD.

ACTION: Notice.

SUMMARY: The Department of the Navy (DoN) is extending the public comment period for the Draft Environmental Impact Statement (EIS) for the Proposed Modernization and Expansion of Townsend Bombing Range (TBR), Georgia (GA) until September 27, 2012. A Notice of Availability (NOA) and a Notice of Public Meetings (NOPMs) for the Draft EIS were published in the **Federal Register** on Friday, July 13, 2012 (**Federal Register**/Vol. 77, No. 135, Pages 41385–41387 (NOPMs) and Page 41403 (NOA)). Those notices announced the initial public comment period, including public meetings that took place on Tuesday, August 7, 2012 and Thursday, August 9, 2012, and provided additional information on the background and scope of the Draft EIS. The initial public comment period requested the submission of all comments on the Draft EIS to the DoN by August 27, 2012. The DoN is extending the public comment period until September 27, 2012.

FOR FURTHER INFORMATION CONTACT: Contact Capt. Cochran, 596 Geiger Blvd. MCAS Beaufort, SC 29904 at 843–228–6123.

SUPPLEMENTARY INFORMATION: The DoN, as lead agency, has prepared and filed the Draft EIS for the Proposed Modernization and Expansion of TBR, GA in accordance with the requirements of the National Environmental Policy Act of 1969 (42 United States Code 4321 *et seq.*) and its implementing regulations (40 Code of Regulations parts 1500–1508). The Draft EIS evaluates the potential environmental impacts of acquiring additional property and constructing the necessary infrastructure to allow the use of inert precision-guided munitions (PGMs) at TBR, GA.

The purpose of the Proposed Action is to provide an air-to-ground training range capable of providing a wider variety of air-to-ground operations, including the use of PGMs, to meet current training requirements. The Proposed Action is needed to more efficiently meet current training requirements for the United States

Marine Corps aviation assets by significantly increasing air-to-ground training capabilities in the Beaufort, South Carolina Region. The Draft EIS has identified and considered four action alternatives and a No Action alternative.

More information of the Draft EIS can be found in the previously published NOA and NOPM (see **Federal Register** on Friday, July 13, 2012 (**Federal Register**/Vol. 77, No. 135, Pages 41385–41387 (NOPMs) and Page 41403 (NOA)). Federal, State, and local agencies, elected officials, and other interested parties and individuals, are invited and encouraged to review and comment on the Draft EIS. Comments on the Draft EIS can be submitted via the project email address (*townsendbombingrangeeise@ene.com*), project Web site or submitted in writing to: Townsend Bombing Range EIS Project Manager, Post Office Box 180458, Tallahassee, Florida, 32318. All comments must be postmarked or electronically dated on or before September 27, 2012 to be sure they become part of the public record.

The Draft EIS has been distributed to various Federal, State, local agencies, and Native American Tribes, as well as other interested parties and individuals. In addition, copies of the Draft EIS are available for public review at the following public libraries: Ida Hilton Public Library, 1105 North Way, Darien, GA, 31305; Long County Public Library, 28 S. Main Street, Ludowici, GA, 31316; and Hog Hammock Public Library, 1023 Hillery Lane, Sapelo Island, GA, 31327.

An electronic copy of the Draft EIS is also available for public viewing at *http://www.townsendbombingrangeeis.com.*

To be considered, all comments on the Draft EIS must be received by September 27, 2012. The DoN will consider and respond to all comments received on the Draft EIS when preparing the Final EIS. The DoN expects to issue the Final EIS in spring 2013, at which time a NOA will be published in the **Federal Register** and local print media. A Record of Decision is expected in summer 2013.

Dated: August 17, 2012.

C.K. Chiappetta,

Lieutenant Commander, U. S. Navy, Office of the Judge Advocate General, U.S. Navy, Federal Register Liaison Officer.

[FR Doc. 2012–20872 Filed 8–23–12; 8:45 am]

BILLING CODE 3810–FF–P

DEPARTMENT OF DEFENSE

Department of the Navy

Notice of Public Hearings for the Draft Environmental Impact Statement for Outdoor Research, Development, Test and Evaluation Activities, Naval Surface Warfare Center, Dahlgren Division, Dahlgren, VA

AGENCY: Department of the Navy, DoD.

ACTION: Notice.

SUMMARY: Pursuant to Section (102)(2)(c) of the National Environmental Policy Act (NEPA) and the Council on Environmental Quality regulations for implementing the procedural provisions of NEPA (Title 40 Code of Federal Regulations Parts 1500–1508), the Department of the Navy (DoN) has prepared and filed with the U.S. Environmental Protection Agency a Draft Environmental Impact Statement (EIS) to evaluate the potential environmental effects of expanding Naval Surface Warfare Center, Dahlgren Division's (NSWCDD) research, development, test and evaluation (RDT&E) activities within the Potomac River Test Range (PRTR) complex, Explosives Experimental Area (EEA) Range complex, the Mission Area, and Special-Use Airspace (SUA) located at Naval Support Facility (NSF) Dahlgren, Dahlgren, VA.

The DoN will conduct three public hearings to receive oral and written comments on the Draft EIS. Federal, state, and local agencies, elected officials, and other interested individuals and organizations are invited to be present or represented at the public hearings. This notice announces the dates and locations of the public hearings for this Draft EIS.

DATES AND ADDRESSES: Public hearings will be held on the following dates and locations:

1. September 11, 2012 at the Newburg Volunteer Rescue Squad and Fire Department, 12245 Rock Point Road, Newburg, MD 20664;
2. September 12, 2012 at the A.T. Johnson Alumni Museum, 18849 Kings Highway, Montross, VA 22520; and
3. September 13, 2012 at the Mary Washington University-Dahlgren Campus, 4224 University Drive, King George, VA 22485.

All meetings will be held from 6:00 p.m. to 8:00 p.m. and will begin with a presentation followed by a public comment period.

FOR FURTHER INFORMATION CONTACT: Commander, Naval Surface Warfare Center Dahlgren Division, 6149 Welsh Road, Suite 203, Dahlgren, VA 22448–5130, Attn: Code C6 (NSWCDD PAO), Fax: 1–540–653–4679, Email: *DLGR_NSWC_EIS@NAVY.MIL,* Phone: 1–540–653–8154, or Web site: *http://www.navsea.navy.mil/nswc/dahlgren/EIS/index.aspx.*

SUPPLEMENTARY INFORMATION: A Notice of Intent to prepare the NSWCDD Outdoor RDT&E Activities Draft EIS was published in the **Federal Register** on June 18, 2007 (72 FR 33456–33457). Five public scoping meetings were held on the following dates and locations:

1. July 23, 2007, Shiloh Baptist Church, 13457 Kings Highway, King George, VA 22485;
2. July 24, 2007, Christ Episcopal Church, 37497 Zach Fowler Road, Chaptico, MD 20621;
3. July 25, 2007, La Plata Volunteer Fire Department, 911 Washington Avenue, La Plata, MD 20646;
4. July 30, 2007, Saint Mary's Episcopal Church, 203 Dennison Street, Colonial Beach, VA 22443; and
5. July 31, 2007, Callao Rescue Squad Hall, 1348 Northumberland Highway, Callao, VA 22435.

The proposed action is to expand NSWCDD's RDT&E capabilities within the PRTR Complex, the EEA Range Complex, Mission Area, and SUA. These RDT&E activities include outdoor operations that require the use of ordnance, high-power electromagnetic (EM) energy, high-energy (HE) lasers, and chemical and biological simulants (non-toxic substances used to mimic dangerous agents). Under the proposed action, the average number of events that could take place annually (with the exception of large-caliber gun firing events) would increase above current baseline levels. To ensure that equipment and materials work effectively, even in less-than-ideal conditions, some activities would take place under conditions in which activities are now rarely/never conducted, such as at dusk, dawn, and night and in adverse weather.

The purpose of the proposed action is to enable NSWCDD to meet current and future mission-related warfare and force-protection requirements by providing RDT&E of surface ship combat systems, ordnance, HE lasers and directed-energy systems, force-level warfare, and homeland and force protection.

The need for the proposed action is to enable the DoN and other stakeholders to successfully meet current and future national and global defense challenges required under 10 U.S.C. 5062 (2006) by developing a robust capability to carry out assigned RDT&E activities within the PRTR and EEA Range Complexes,

the Mission Area, and the SUA at NSF Dahlgren.

NSWCDD evaluated a range of alternatives that would meet action objectives, and applied screening criteria to identify those alternatives that were ''reasonable'' (i.e., practical and feasible). Reasonable alternatives were carried through the Draft EIS analysis. Screening criteria included:

1. Criterion 1—accommodate historical and current, baseline RDT&E mission requirements for activities that have the potential to affect human health and/or the environment; namely, those involving ordnance, the use of high-power EM energy, HE lasers, chemical simulants, and the use of the PRTR;

2. Criterion 2—accommodate known future requirements, which include the use of biological simulants alone;

3. Criterion 3—accommodate optimal potential future requirements by incorporating a margin of growth for the most actively evolving programs for which it is difficult to accurately forecast future needs, and include mixtures of biological and chemical simulants; and

4. Criterion 4—minimize impacts to commercial and recreational use of the Potomac River.

Reasonable alternatives were carried through the Draft EIS analysis. The Draft EIS considers three alternatives as summarized below:

1. No Action Alternative—maintains current operations and provides a baseline against which to measure the impacts of the other two alternatives.

2. Alternative 1—includes No Action Alternative plus growth above No Action Alternative levels necessary to meet RDT&E mission requirements in the near future.

3. Alternative 2—Provides for roughly 15% growth in activity levels above that of Alternative 1 to provide a margin of growth for the most actively evolving programs. It addresses current baseline requirements, known future requirements, and projected increases in the foreseeable future based on current trends. This alternative is the Preferred Alternative.

Alternatives 1 and 2 constitute increases in current activities of small-arms firing, detonations, high-power EM energy events, HE laser events, chemical and biological simulant (defense) events, and PRTR hours of use.

Alternative 2 (Preferred Alternative) satisfies current baseline requirements, includes the growth necessary to meet known RDT&E mission requirements for the near future and includes a margin of growth for the most actively evolving programs, namely those for which the numbers of future annual test events, firings, and hours of use are harder to predict because of the uncertainties inherent in carrying out RDT&E.

The Draft EIS evaluates the potential environmental effects associated with NSWCDD's outdoor RDT&E activities. Alternatives were evaluated within resource areas including land use and plans, coastal zone resources, socioeconomics, environmental justice communities, protection of children, utilities, air quality, noise levels, cultural resources, hazardous materials and hazardous waste, health and safety, geology, topography, soils and sediments, water resources, and aquatic and terrestrial biological resources. The analysis includes an evaluation of the direct, indirect, and cumulative impacts. Methods to reduce or minimize impacts to affected resources are addressed.

The DoN has made a preliminary finding that for all three alternatives there would be no significant impact to land use and plans, coastal zone resources, socioeconomics, low-income and minority populations, children, utilities, air quality, noise levels, cultural resources, hazardous materials and hazardous waste, health and safety, geology, topography, soils and sediments, water resources, and aquatic and terrestrial biological resources, and we are awaiting concurrence from the respective agencies.

All alternatives have the potential to affect fish and sea turtles species protected under the Endangered Species Act (ESA). In accordance with Section 7 of the ESA, the DoN consulted with the National Marine Fisheries Service (NMFS) for potential impacts to federally-listed species. NMFS concurred with the DoN's finding that the alternatives are not likely to adversely affect the endangered shortnose sturgeon, the Atlantic sturgeon, or ESA-listed sea turtles. No terrestrial animals or plants protected under the ESA, the Migratory Bird Treaty Act, or Bald and Golden Eagle Protection Act would be affected. Based on the DoN's analysis, the proposed action would not result in the incidental harassment of marine mammals protected under the Marine Mammal Protection Act.

The DoN is also consulting with NMFS regarding potential effects on essential fish habitat under the Magnuson Stevens Fishery Conservation and Management Act with the release of this Draft EIS. The DoN has made a preliminary finding that there would be no adverse impacts on essential fish habitat under any of the alternatives, and we are awaiting concurrence from NMFS.

Federal Coastal Consistency Determinations will be forwarded to Virginia and Maryland with the Draft EIS. Based on analysis, the DoN has made a preliminary finding that there would be no to minimal impact on coastal resources, and the Proposed Action is consistent to the maximum extent practical with Virginia and Maryland policies. We are awaiting concurrence from the Virginia and Maryland Coastal Management Programs.

The DoN consulted with the State Historic Preservation Officers (SHPOs) in Maryland and Virginia. Both SHPOs concluded there would be no adverse effect on National Register-listed or eligible resources in the areas of potential effect under all the alternatives.

NSWCDD will continue to adhere to general safety and environmental protective measures for all RDT&E activities and to implement specific protective measures for RDT&E activities using chemical and biological stimulants. No specific mitigation measures are required.

The Draft EIS was distributed to federal, state, and local agencies, elected officials, and other interested individuals and organizations. The public comment period will end on October 1, 2012. The Draft EIS is available for review or download at: *http://www.navsea.navy.mil/nswc/dahlgren/EIS/index.aspx.*

Copies of the Draft EIS are available for public review at the following libraries:

1. Lewis Egerton Smoot Memorial Library, 8562 Dahlgren Road, King George, VA 22485;

2. Cooper Memorial Library, 20 Washington Avenue, Colonial Beach, VA 22443;

3. Northumberland Public Library, 7204 Northumberland Highway, Heathsville, VA 22473;

4. Charles County Public Library, La Plata Branch, 2 Garrett Avenue, La Plata, MD 20646; and

5. St. Mary's County Library, Leonardtown Branch, 23250 Hollywood Road, Leonardtown, MD 20650.

Federal, state, and local agencies, elected officials, and interested individuals and organizations are invited to be present or represented at the public hearings where oral and written comments on the Draft EIS will be received. Oral statements will be heard and transcribed by a stenographer; however, to ensure the accuracy of the record, all statements should be submitted in writing. All

statements, both oral and written, will become part of the public record on the Draft EIS and will be responded to in the Final EIS. Equal weight will be given to both oral and written statements. In the interest of available time, and to ensure all who wish to give an oral statement have the opportunity to do so, each speaker's comments will be limited to two (2) minutes. If a long statement is to be presented, it should be summarized at the public hearing with the full text submitted either in writing at the hearing, or mailed, faxed, or emailed to Commander, Naval Surface Warfare Center Dahlgren Division, 6149 Welsh Road, Suite 203, Dahlgren, VA 22448–5130, Attn: Code C6 (NSWCDD PAO), Fax: 1–540–653–4679, or Email: *DLGR_NSWC_EIS@navy.mil* during the comment period. All written comments must be postmarked or received by October 01, 2012 to ensure they become part of the official record. All comments will be addressed in the Final EIS.

Dated: August 20, 2012.

C.K. Chiappetta,

Lieutenant Commander, Judge Advocate General's Corps, U.S. Navy, Federal Register Liaison Officer.

[FR Doc. 2012–20937 Filed 8–23–12; 8:45 am]

BILLING CODE 3810–FF–P

DEPARTMENT OF ENERGY

Proposed Agency Information Collection

AGENCY: U.S. Department of Energy.

ACTION: Notice and request for OMB review and comment.

SUMMARY: The Department of Energy (DOE) has submitted to the Office of Management and Budget (OMB) for clearance a proposal for collection of information under the provisions of the Paperwork Reduction Act of 1995. The proposed collection will enable DOE to have current knowledge of Federal employees and contractors conducting foreign travel to a non U.S. territory on the behalf of DOE. Information gathered will include dates of travel, destination, purpose, and after-hour contact information in case of emergency.

DATES: Comments regarding this collection must be received on or before 30 days after date of publication in the **Federal Register**. If you anticipate that you will be submitting comments, but find it difficult to do so within the period of time allowed by this notice, please advise the DOE Desk Officer at OMB of your intention to make a submission as soon as possible. The Desk Officer may be telephoned at 202–395–4650.

ADDRESSES: Written comments should be sent to the DOE Desk Officer, Office of Information and Regulatory Affairs, Office of Management and Budget, New Executive Office Building, Room 10102, 735 17th Street NW., Washington, DC 20503, and to Julie Squires by fax at (202) 586–0406 or by email at *julie.squires@hq.doe.gov.*

FOR FURTHER INFORMATION CONTACT: Requests for additional information or copies of the information collection instrument and instructions should be directed to Julie Squires at *julie.squires@hq.doe.gov.*

SUPPLEMENTARY INFORMATION: This information collection request contains:

(1) OMB No. 1910–5144.

(2) Information Collection Request Title: records, and secures approval of all foreign travel conducted by DOE federal employees and contractors. The system allows DOE to have full accountability of all travel and in cases of emergency DOE is able to quickly retrieve information as to who is traveling, where the individual is traveling, and the dates of travel. Information gathered is listed under three categories: (1) Traveler Information which requests traveler's name, passport information, site, position, and contact information, (2) General Trip Information which consists of estimated travel costs, and (3) Trip Itinerary Information which consists of destination, dates of travel, and purpose.

(3) Type of Respondents: DOE Federal employees and contractors traveling on behalf of DOE.

(4) Estimated Annual Number of Respondents 8,313.

(5) Estimated Annual Number of Burden Hours: 4,228.

(6) Estimated Annual Cost Burden: None.

Authority: DOE Order 551.1D (April 2, 2012), regarding ''Official Foreign Travel.''

Issued in Washington, DC, on August 14, 2012.

Umeki G. Thorne,

Director, Office of Management, Office of International Travel and Exchange Visitor Programs.

[FR Doc. 2012–20840 Filed 8–23–12; 8:45 am]

BILLING CODE 6450–01–P

ENVIRONMENTAL PROTECTION AGENCY

[ER–FRL9004–7]

Amended Environmental Impact Statement Filing System Guidance for Implementing 40 CFR 1506.9 and 1506.10 of the Council on Environmental Quality's Regulations Implementing the National Environmental Policy Act

1. Introduction

On October 7, 1977, the Council of Environmental Quality (CEQ) and the Environmental Protection Agency (EPA) signed a Memorandum of Agreement (MOA) that allocated the responsibilities of the two agencies for assuring the government-wide implementation of the National Environmental Policy Act of 1969 (NEPA). Specifically, the MOA transferred to EPA the administrative aspects of the environmental impact statement (ElS) filing process. Within EPA, the Office of Federal Activities has been designated the official recipient in EPA of all EISs. These responsibilities have been codified in CEQ's NEPA Implementing Regulations (40 CFR Parts 1500–1508), and are totally separate from the substantive EPA reviews performed pursuant to both NEPA and Section 309 of the Clean Air Act.

Under 40 CFR 1506.9, EPA can issue guidelines to implement its EIS filing responsibilities. The purpose of the EPA Filing System Guidelines is to provide guidance to Federal agencies on filing EISs, including draft, final, and supplemental EISs. Information is provided on: (1) How to file EISs; (2) the steps to follow when a Federal agency is adopting an EIS, or when an EIS is withdrawn, delayed or reopened; (3) public review periods; (4) issuance of notices of availability in the **Federal Register**; and (5) retention of filed EISs.

The guidelines published today update the previous guidelines, which were first published in the **Federal Register** on March 7, 1989. These updated guidelines have been modified to incorporate changes necessary to implement the *e-NEPA* electronic filing system.

2. Purpose

Pursuant to 40 CFR 1506.9 and 1506.10, EPA is responsible for administering the EIS filing process, and can issue guidelines to implement those responsibilities. The process of EIS filing includes the following: (1) Receiving and recording of the EISs, so that information in them can be incorporated into EPA's computerized

data base; (2) establishing the beginning and ending dates for comment and review periods for draft and final EISs, respectively; (3) publishing these dates in a weekly Notice of Availability (NOA) in the **Federal Register**; (4) retaining the EISs in a central repository; and (5) determining whether time periods can be lengthened or shortened for ''compelling reasons of national policy.''

Under 40 CFR 1506.9, lead agencies are responsible for distributing EISs, and for providing additional copies of already distributed EISs, to the interested public for review. However, EPA will assist the public and other Federal agencies by providing agency contacts on, and information about, EISs.

3. Filing Draft, Final, and Supplemental EISs

Federal agencies are required to prepare EISs in accordance with 40 CFR part 1502, and to file the EISs with EPA as specified in 40 CFR 1506.9. As of October 1, 2012, Federal agencies file an EIS by submitting the complete EIS, including appendices, to EPA through the *e-NEPA* electronic filing system.

To sign up for *e-NEPA,* register for an account at: *https://cdx.epa.gov/epa_home.asp*

Select ''NEPA Electronic Filing System (*e-NEPA*)'' when prompted to add a program. Inquiries can also be made to: (202) 564–7146 or (202) 564–0678 or by email to: *EISfiling@epa.gov*.

Please note that if a Federal agency prepares an abbreviated Final EIS (as described in 40 CFR 1503.4(c)), it should include copies of the Draft EIS when filing the Final EIS.

The EISs must be filed no earlier than they are transmitted to commenting agencies and made available to the public (40 CFR 1506.9). This will assure that the EIS is received by all interested parties by the time EPA's NOA appears in the **Federal Register**, and, therefore, allows for the full minimum comment and review periods.

If EPA receives a request to file an EIS and transmittal of that EIS is not complete, it will not publish a NOA in the **Federal Register** until assurances have been given that the transmittal process is complete. Similarly, if EPA discovers that a filed EIS has not been transmitted, EPA will issue a notice with the weekly Notices of Availability retracting the EIS from public review of the EIS until the transmittal process is completed. Once the agency has fulfilled the requirements of 40 CFR 1506.9, and has completed the transmittal process, EPA will reestablish the filing date and the minimum time period, and will publish this information in the next NOA. Requirements for circulation of EISs appear in 40 CFR 1502.19. Please note that the EIS submitted to the Office of Federal Activities through *e-NEPA* is only for filing purposes.

EPA must be notified when a Federal agency adopts an EIS in order to commence the appropriate comment or review period. If a Federal agency chooses to adopt an EIS written by another agency, and it was not a cooperating agency in the preparation of the original EIS, the EIS must be re-circulated and filed with EPA according to the requirements set forth in 40 CFR 1506.3(b). In turn, EPA will publish a NOA in the **Federal Register** announcing that the document will have an appropriate comment or review period. When an agency adopts an EIS on which it served as a cooperating agency, the document does not need to be circulated for public comment or review; it is not necessary to file the EIS again with EPA. However, EPA should be notified in order to ensure that the official EIS record is accurate. Notifications can be sent by email to: *EISfiling@epa.gov*. EPA will publish an amended NOA in the **Federal Register** that states that an adoption has occurred. This will not establish a comment period, but will complete the public record.

EPA should also be notified of all situations where an agency has decided to withdraw, delay, or reopen a review period on an EIS. Notifications can be sent by email to: *EISfiling@epa.gov*. All such notices to EPA will be reflected in EPA's weekly Notices of Availability published in the **Federal Register**. In the case of reopening EIS review periods, the lead agency should notify EPA as to what measures will be taken to ensure that the EIS is available to all interested parties. This is especially important for EIS reviews that are being reopened after a substantial amount of time has passed since the original review period closed.

Once received by EPA, each EIS is assigned an official filing date and checked for completeness and compliance with 40 CFR 1502.10. If the EIS is not ''complete'' (*i.e.,* if the documents do not contain the required components), EPA will contact the lead agency to obtain the omitted information or to resolve any questions prior to publishing the NOA in the **Federal Register**.

Agencies often publish (either in their EISs or individual notices to the public) a date by which all comments on an EIS are to be received; such actions are encouraged. However, agencies should ensure that the date they use is based on the date of publication of the NOA in the **Federal Register**. If the published date gives reviewers less than the minimum review time computed by EPA, EPA will send the agency contact a letter explaining how the review period is calculated and the correct date by which comments are due back to the lead agency. This letter also encourages agencies to notify all reviewers and interested parties of the corrected review periods.

4. Notice in the Federal Register

EPA will prepare a weekly report of all EISs filed during the preceding week for publication each Friday under a NOA in the **Federal Register**. If the Friday is a Federal holiday the publication will be on Thursday. At the time EPA sends its weekly report for publication in the **Federal Register**, the report will also be sent to the CEQ. Amended notices may be added to the NOA to include corrections, changes in time periods of previously filed EISs, withdrawals of EISs by lead agencies, and retraction of EISs by EPA.

5. Time Periods

The minimum time periods set forth in 40 CFR 1506.10 (b), (c), and (d) are calculated from the date EPA publishes the NOA in the **Federal Register**. Comment periods for draft EISs, draft supplements, and revised draft EISs will end 45 calendar days after publication of the NOA in the **Federal Register**; review periods for final EISs and final supplements will end 30 calendar days after publication of the NOA in the **Federal Register**. If a calculated time period would end on a non-working day, the assigned time period will be the next working day (*i.e.,* time periods will not end on weekends or Federal holidays). While these time periods are minimum time periods, a lead agency may establish longer time periods. If the lead agency employs a longer time period, it must notify EPA of the extended time period when either filing the EIS through *e-NEPA* or by email to: *EISfiling@epa.gov* when the lead agency extends the time period. It should be noted that 40 CFR 1506.10(b) allows for an exception to the rules of timing. An exception may be made in the case of an agency decision which is subject to a formal internal appeal. Agencies should assure that EPA is informed so that the situation is accurately reflected in the NOA.

Moreover, under 40 CFR 1506.10(d), EPA has the authority to both extend and reduce the time periods on draft and final EISs based on a demonstration of ''compelling reasons of national

policy.'' A lead agency request to EPA to reduce time periods or another Federal agency (not the lead agency) request to formally extend a time period should be submitted in writing to the Director, Office of Federal Activities, and outline the reasons for the request. These requests can be submitted by email to: *EISfiling@epa.gov.* EPA will accept telephone requests; however, agencies should follow up such requests in writing so that the documentation supporting the decision is complete. A meeting to discuss the consequences for the project and any decision to change time periods may be necessary. For this reason, EPA asks that it be made aware of any intent to submit requests of this type as early as possible in the NEPA process. This is to prevent the possibility of the time frame for the decision on the time period modification from interfering with the lead agency's schedule for the EIS. EPA will notify CEQ of any reduction or extension granted.

6. Retention

Filed EISs are retained in the *e-NEPA* Filing system for two years. After two years the EISs are sent to the National Records Center. After a total of twenty (20) years the EISs are transferred to the National Archives Records Administration (NARA).

Please note that EPA maintains a Web site that will make available copies of the filed EISs to the public. The retention schedule does not affect the availability of these electronic copies.

Dated: August 21, 2012.

Cliff Rader,

Director, NEPA Compliance Division, Office of Federal Activities.

[FR Doc. 2012–20914 Filed 8–23–12; 8:45 am]

BILLING CODE 6560–50–P

ENVIRONMENTAL PROTECTION AGENCY

[ER–FRL–9004–6]

Environmental Impacts Statements; Notice of Availability

AGENCY: Office of Federal Activities, General Information (202) 564–7146 or *http://www.epa.gov/compliance/nepa/*

Weekly receipt of Environmental Impact Statements Filed 08/13/2012 Through 08/17/2012 Pursuant to 40 CFR 1506.9.

Notice

Section 309(a) of the Clean Air Act requires that EPA make public its comments on EISs issued by other Federal agencies. EPA's comment letters on EISs are available at: *http://www.epa.gov/compliance/nepa/eisdata.html.*

SUPPLEMENTARY INFORMATION: Starting October 1, 2012, EPA will not accept paper copies or CDs of EISs for filing purposes; all submissions on or after October 1, 2012 must be made through e-NEPA. While this system eliminates the need to submit paper or CD copies to EPA to meet filing requirements, electronic submission does not change requirements for distribution of EISs for public review and comment. To begin using e-NEPA, you must first register with EPA's electronic reporting site—*https://cdx.epa.gov/epa_home.asp.*

EIS No. 20120268, Draft EIS, USFWS, WV, Proposed Issuance of an Incidental Take Permit for the Beech Ridge Energy Wind Project Habitat Conservation Plan, Implementation, Greenbrier and Nicholas Counties, WV, Comment Period Ends: 10/23/2012, Contact: Laura Hill 304–636–6586, ext 18.

EIS No. 20120269, Final EIS, FHWA, CA, State Route 91 Corridor Improvement Project, Widening SR 91 from SR 91/State Route 241 Interchange in Orange County to Pierce Street in Riverside County, Orange and Riverside Counties, CA, Review Period Ends: 09/24/2012, Contact: Aaron Burton 909–388–2841.

EIS No. 20120270, Final Supplement, FHWA, MN, Trunk Highway 60 between Windom and St. James, Implementation of Transportation System Improvements, Funding, USACE Section 404 Permit, Cottonwood and Watonwan Counties, MN, Review Period Ends: 09/24/2012, Contact: Philip Forst 651–291–6110.

EIS No. 20120271, Final EIS, USFWS, NV, Sheldon National Wildlife Refuge Project, Draft Resource Conservation Plan, Implementation, Humboldt and Washoe Counties, NV and Lake County, OR, Review Period Ends: 09/24/2012, Contact: Aaron Collins 541–947–3315, ext. 223.

EIS No. 20120272, Final EIS, USN, CA, Marine Corps Base Camp Pendleton Project, Base wide Water Infrastructure, Construction and Operation, San Diego County, CA, Review Period Ends: 09/24/2012, Contact: Jesse Martinez 619–532–3844.

EIS No. 20120273, Final EIS, FHWA, CO, Breckenridge Ski Resort Peak 6 Project, Implementation, White River National Forest, Summit County, CO, Review Period Ends: 09/24/2012, Contact: Joe Foreman 970–262–3443.

EIS No. 20120274, Draft EIS, USFS, AZ, Prescott National Forest Land and Resource Management Plan, Implementation, Yavapai and Coconino Counties, AZ, Comment Period Ends: 10/08/2012, Contact: Mary C. Rasmussen 928–443–8265.

EIS No. 20120275, Draft EIS, USFS, MT, Wild Cramer Forest Health and Fuels Reduction Project, Swan Lake Ranger District, Flathead National Forest, Flathead County, MT, Comment Period Ends: 10/08/2012, Contact: Richard Kehr 406–837–7500.

Amended Notices

EIS No. 20120201, Draft Supplement, USACE, IN, Indianapolis North Flood Damage Reduction, Modifications to Project Features and Realignment of the South Warfleigh Section, Marion County, IN, Comment Period Ends: 08/31/2012, Contact: Michael Turner 502–315–6900.

Revision to FR Notice Published 07/20/2012; Extending Comment Period from 08/31/2012 to 09/28/2012.

EIS No. 20120227, Draft EIS, USMC, GA, Proposed Modernization and Expansion of Townsend Bombing Range, Acquiring Additional Property and Constructing Infrastructure to Allow the Use of Precision-Guided Munitions, McIntosh and Long Counties, GA, Comment Period Ends: 09/27/2012, Contact: Veronda Johnson 571–256–2783.

Revision to FR Notice Published 7/13/2012; Extending Review Period from 8/27/12 to 09/27/2012.

EIS No. 20120247, Final EIS, USACE, 00, Mississippi River Gulf Outlet Ecosystem Restoration, To Develop a Comprehensive Ecosystem Restoration Plan To Restore the Lake Borgne Ecosystems, LA and MS, Review Period Ends: 09/06/2012, Contact: Tammy Gilmore 504–862–1002.

Revision to FR Notice Published 7/27/2012; Extending Review Period from 08/27/2012 to 09/06/2012.

Dated: August 21, 2012.

Cliff Rader,

Director, NEPA Compliance Division, Office of Federal Activities.

[FR Doc. 2012–20913 Filed 8–23–12; 8:45 am]

BILLING CODE 6560–50–P

ENVIRONMENTAL PROTECTION AGENCY

[EPA–HQ–OPP–2012–0003; FRL–9359–8]

SFIREG POM Working Committee; Notice of Public Meeting

AGENCY: Environmental Protection Agency (EPA).

ACTION: Notice.

SUMMARY: The Association of American Pesticide Control Officials (AAPCO)/ State FIFRA Issues Research and Evaluation Group (SFIREG), Pesticides Operations and Management (POM) Working Committee will hold a 2-day meeting, beginning on September 17, 2012, and ending September 18, 2012. This notice announces the location and times for the meeting and sets forth the tentative agenda topics.

DATES: The meeting will be held on Monday, September 17, 2012, from 8:30 a.m. to 5 p.m. and 8:30 a.m. to 12 noon on Tuesday, September 18, 2012.

To request accommodation of a disability, please contact the person listed under **FOR FURTHER INFORMATON CONTACT**, preferably at least 10 days prior to the meeting, to give EPA as much time as possible to process your request.

ADDRESSES: The meeting will be held at EPA, One Potomac Yard (South Bldg.), First Floor South Conference Room, 2777 Crystal Dr., Arlington, VA.

FOR FURTHER INFORMATION CONTACT: Ron Kendall, Field External Affairs Division (7506P), Office of Pesticide Programs, Environmental Protection Agency, 1200 Pennsylvania Ave. NW., Washington, DC 20460–0001; telephone number: (703) 305–5561; fax number: (703) 305–5884; email address: *kendall.ron@epa.gov*. or Grier Stayton, SFIREG Executive Secretary, P.O. Box 466, Milford, DE 19963; telephone number: (302) 422–8152; fax number: (302) 422–2435; email address: *stayton.grier@aapco-sfireg@comcast.net*.

SUPPLEMENTARY INFORMATION:

I. General Information

A. Does this action apply to me?

You may be potentially affected by this action if you are interested in pesticide regulation issues affecting States and any discussion between EPA and SFIREG on FIFRA field implementation issues related to human health, environmental exposure to pesticides, and insight into EPA's decision-making process. You are invited and encouraged to attend the meetings and participate as appropriate. Potentially affected entities may include, but are not limited to:

Those persons who are or may be required to conduct testing of chemical substances under the Federal Food, Drug and Cosmetics Act (FFDCA), or the Federal Insecticide, Fungicide, and Rodenticide Act (FIFRA) and those who sell, distribute or use pesticides, as well as any Non Government Organization.

This listing is not intended to be exhaustive, but rather provides a guide for readers regarding entities likely to be affected by this action. Other types of entities not listed in this unit could also be affected. If you have any questions regarding the applicability of this action to a particular entity, consult the person listed under **FOR FURTHER INFORMATION CONTACT**.

B. How can I get copies of this document and other related information?

The docket for this action, identified by docket identification (ID) number EPA–HQ–OPP–2012–0003, is available either electronically through *http://www.regulations.gov* or in hard copy at the OPP Docket in the Environmental Protection Agency Docket Center (EPA/DC), located in EPA West, Rm. 3334, 1301 Constitution Ave. NW., Washington, DC 20460–0001. The Public Reading Room is open from 8:30 a.m. to 4:30 p.m., Monday through Friday, excluding legal holidays. The telephone number for the Public Reading Room is (202) 566–1744, and the telephone number for the OPP Docket is (703) 305–5805. Please review the visitor instructions and additional information about the docket available at *http://www.epa.gov/dockets*.

II. Tentative Agenda Topics

1. State Lead Agency (SLA) label improvement activities/efforts;
2. Next steps as the result of the label improvement workshop. Do we need a workshop focusing on structural labels?
3. Identifying/negotiating regional commitments in cooperative agreements;
4. Reconciling SLA referrals to EPA for enforcement vs. SLA efforts to fix violative labels in a timely manner;
5. Risk mitigation on seed bag tags;
6. Persistent herbicides in compost (sources);
7. Methomyl issue paper;
8. Non-crop issue paper;
9. SLA availability to answer EPA/ Registration Division questions. What process can be effective?
10. Update on Insect Repellency Mark Initiative.

III. How can I request to participate in this meeting?

This meeting is open for the public to attend. You may attend the meeting without further notification.

List of Subjects

Environmental protection.

Dated: August 14, 2012.

R. McNally,

Director, Field External Affairs Division, Office of Pesticide Programs.

[FR Doc. 2012–20908 Filed 8–23–12; 8:45 am]

BILLING CODE 6560–50–P

ENVIRONMENTAL PROTECTION AGENCY

[FRL–9720–5]

Good Neighbor Environmental Board Notification of Public Advisory Committee Teleconference

AGENCY: Environmental Protection Agency (EPA).

ACTION: Notification of Public Advisory Committee Teleconference.

SUMMARY: Pursuant to the Federal Advisory Committee Act, Public Law 92–463, notice is hereby given that the Good Neighbor Environmental Board (GNEB) will hold a public teleconference on September 6, 2012 from 2 p.m. to 4:30 p.m. Eastern Standard Time. The meeting is open to the public. For further information regarding the teleconference and background materials, please contact Mark Joyce at the number listed below. Due to logistical complications, EPA is announcing this teleconference with less than 15 days public notice.

Background: GNEB is a federal advisory committee chartered under the Federal Advisory Committee Act, Public Law 92–463. GNEB provides advice and recommendations to the President and Congress on environmental and infrastructure issues along the U.S. border with Mexico.

Purpose of Meeting: The purpose of this teleconference is to discuss and approve the Good Neighbor Environmental Board's Fifteenth Report, which focuses on water infrastructure issues in the U.S.-Mexico border region.

SUPPLEMENTARY INFORMATION: If you wish to make oral comments or submit written comments to the Board, please contact Mark Joyce at least five days prior to the meeting.

General Information: Additional information concerning the GNEB can be found on its Web site at *www.epa.gov/ofacmo/gneb*.

Meeting Access: For information on access or services for individuals with disabilities, please contact Mark Joyce at (202) 564–2130 or email at *joyce.mark@epa.gov*. To request accommodation of a disability, please contact Mark Joyce at least 10 days prior

to the meeting to give EPA as much time as possible to process your request.

Dated: August 20, 2012.

Mark Joyce,

Acting Designated Federal Officer.

[FR Doc. 2012–20882 Filed 8–23–12; 8:45 am]

BILLING CODE 6560–50–P

ENVIRONMENTAL PROTECTION AGENCY

[FRL–9710–8]

Notice of Proposed Prospective Purchaser Agreement Pursuant to the Comprehensive Environmental Response, Compensation and Liability Act of 1980, as Amended (''CERCLA''), and the Solid Waste Disposal Act

AGENCY: Environmental Protection Agency (EPA).

ACTION: Notice; request for public comment.

SUMMARY: In accordance with the Comprehensive Environmental Response, Compensation, and Liability Act of 1980, as amended (''CERCLA''), and the Solid Waste Disposal Act, commonly referred to as the Resource Conservation and Recovery Act of 1976, as amended by the Hazardous and Solid Waste Amendments of 1984 (''RCRA''), notice is hereby given that a proposed Prospective Purchaser Agreement (''PPA'') associated with a 1400-acre parcel of property located in Philadelphia, Pennsylvania (''Property'') was executed by the Environmental Protection Agency and the Department of Justice. Once finalized, the PPA will resolve potential claims under Sections 106 and 107(a) of CERCLA, and Sections 3005 and 3008(a) of RCRA, against Philadelphia Energy Solutions LLC (''PES LLC'') and Philadelphia Energy Solutions Refining & Marketing (''PES R&M LLC''). The proposed PPA is now subject to public comment after which the United States may modify or withdraw its consent if comments received disclose facts or considerations which indicate that the PPA is inappropriate, improper, or inadequate.

Sunoco, Inc. (R&M), a subsidiary of Sunoco, Inc., currently operates the Property as a crude oil refinery to distribute, store and process petroleum. PES R&M LLC has proposed to purchase the Property and continue crude oil refining and related operations at the Property.

The Property consists of two formerly separate refining operations known as ''Point Breeze'' and ''Girard Point.'' EPA issued a RCRA Corrective Action Permit under RCRA Section 3004(u), 42 U.S.C. Section 6924(u), for the Point Breeze operation in 1988 and for the Girard Point operation in 1989. Both permits require Sunoco, Inc. (R&M) to, among other things, investigate solid waste management units (''SWMUs'') and evaluate remedy options. Both permits have been extended by EPA until final remedy selection. After PES R&M LLC purchases the Property, Sunoco, Inc. (R&M) will be required to complete its RCRA corrective action obligations at the Property.

DATES: Comments must be submitted on or before thirty (30) days after the date of publication of this notice.

ADDRESSES: The Proposed PPA and additional background information relating to the Proposed PPA are available for public inspection at the U.S. Environmental Protection Agency, Region III, 1650 Arch Street, Philadelphia, PA 19103. A copy of the Proposed PPA may be obtained from Hon Lee, U.S. Environmental Protection Agency (3LC23), 1650 Arch Street, Philadelphia, PA 19103 or at *lee.hon@epa.gov* or at 215–814–3419. Comments should reference the ''PES LLC PPA'' and ''CERC/RCRA–03–2012–0224DC,'' and should be forwarded to Hon Lee at the above address.

Dated: July 23, 2012.

Abraham Ferdas,

Director, Land and Chemicals Division, U.S. Environmental Protection Agency, Region III.

[FR Doc. 2012–20870 Filed 8–23–12; 8:45 am]

BILLING CODE 6560–50–P

FEDERAL DEPOSIT INSURANCE CORPORATION

Agency Information Collection Activities: Proposed Collection Renewal; Comment Request

AGENCY: Federal Deposit Insurance Corporation (FDIC).

ACTION: Notice and request for comment.

SUMMARY: The FDIC, as part of its continuing effort to reduce paperwork and respondent burden, invites the general public and other Federal agencies to take this opportunity to comment on the renewal of existing information collections, as required by the Paperwork Reduction Act of 1995 (44 U.S.C. chapter 35). Currently, the FDIC is soliciting comment on renewal of the information collections described below.

DATES: Comments must be submitted on or before October 23, 2012.

ADDRESSES: Interested parties are invited to submit written comments to the FDIC by any of the following methods: *http://www.FDIC.gov/regulations/laws/federal/notices.html.*

Email: comments@fdic.gov. Include the name of the collection in the subject line of the message.

Mail: Gary A. Kuiper (202.898.3877), Counsel, Room NYA–5046, Federal Deposit Insurance Corporation, 550 17th Street NW., Washington, DC 20429.

Hand Delivery: Comments may be hand-delivered to the guard station at the rear of the 17th Street Building (located on F Street), on business days between 7:00 a.m. and 5:00 p.m.

All comments should refer to the relevant OMB control number. A copy of the comments may also be submitted to the OMB desk officer for the FDIC: Office of Information and Regulatory Affairs, Office of Management and Budget, New Executive Office Building, Washington, DC 20503.

FOR FURTHER INFORMATION CONTACT: Gary A. Kuiper, at the FDIC address above.

SUPPLEMENTARY INFORMATION: Proposal to renew the following currently-approved collection of information:

1. *Title:* Notice Regarding Unauthorized Access to Customer Information.

OMB Number: 3064–0145.

Frequency of Response: On occasion.

Affected Public: Insured state nonmember banks.

Number of FDIC regulated banks that will notify customers: 93.

Estimated Time per Response: 29 hours.

Annual Burden: 2,697 hours.

General Description of Collection: This collection reflects the FDIC's expectations regarding a response program that financial institutions should develop to address unauthorized access to or use of customer information that could result in substantial harm or inconvenience to a customer. The information collections require financial institutions to: (1) Develop notices to customers; and (2) in certain circumstances, determine which customers should receive the notices and send the notices to customers.

2. *Title:* Identity Theft Red Flags and Address Discrepancies Under the Fair and Accurate Credit Transactions Act of 2003 (FACT Act).

OMB No.: 3064–0152.

Affected Public: Individuals; businesses or other for-profit.

Estimated Number of Respondents: 4,546.

Estimated Time per Response: 16 hours.

Estimated Total Annual Burden: 72,736 hours.

General Description of the Collection: 12 CFR 334.82, 334.90, 334.91 and

Appendix J to Part 334 implement sections 114 and 315 of the Fair and Accurate Credit Transactions Act of 2003 (FACT Act), Public Law 108–159 (2003). Section 114 amended section 615 of the Fair Credit Reporting Act (FCRA) to require the OCC, FRB, FDIC, OTS, NCUA, and FTC (Agencies) to issue jointly (i) Guidelines for financial institutions and creditors regarding identity theft with respect to their account holders and customers; (ii) regulations requiring each financial institution and creditor to establish reasonable policies and procedures for implementing the guidelines to identify possible risks to account holders or customers or to the safety and soundness of the institution or creditor; and (iii) regulations generally requiring credit and debit card issuers to assess the validity of change of address requests under certain circumstances. Section 315 amended section 605 of the FCRA to require the Agencies to issue regulations providing guidance regarding reasonable policies and procedures that a user of consumer reports must employ when a user receives a notice of address discrepancy from a consumer reporting agency (CRA). The information collections in Sec. 334.90 require each financial institution and creditor that offers or maintains one or more covered accounts to develop and implement a written Identity Theft Prevention Program (Program). In developing the Program, financial institutions and creditors are required to consider the guidelines in Appendix J to Part 334 and include those that are appropriate. The initial Program must be approved by the board of directors or an appropriate committee thereof and the board, an appropriate committee thereof or a designated employee at the level of senior management must be involved in the oversight of the Program. In addition, staff must be trained to carry out the Program. Pursuant to Sec. 334.91, each credit and debit card issuer is required to establish and implement policies and procedures to assess the validity of a change of address request under certain circumstances. Before issuing an additional or replacement card, the card issuer must notify the cardholder or use another means to assess the validity of the change of address. The information collections in Sec. 41.82 require each user of consumer reports to develop and implement reasonable policies and procedures designed to enable the user to form a reasonable belief that a consumer report relates to the consumer about whom it requested the report when the user receives a notice of address discrepancy from a CRA. A user of consumer reports must also develop and implement reasonable policies and procedures for furnishing an address for the consumer that the user has reasonably confirmed to be accurate to the CRA from which it receives a notice of address discrepancy when: (1) The user can form a reasonable belief that the consumer report relates to the consumer about whom the user has requested the report; (2) the user establishes a continuing relationship with the consumer; and (3) the user regularly and in the ordinary course of business furnishes information to the CRA from which it received the notice of address discrepancy.

Request for Comment

Comments are invited on: (a) Whether the collection of information is necessary for the proper performance of the FDIC's functions, including whether the information has practical utility; (b) the accuracy of the estimates of the burden of the information collection, including the validity of the methodology and assumptions used; (c) ways to enhance the quality, utility, and clarity of the information to be collected; and (d) ways to minimize the burden of the information collection on respondents, including through the use of automated collection techniques or other forms of information technology. All comments will become a matter of public record.

Dated at Washington, DC, this 20th day of August 2012.

Federal Deposit Insurance Corporation.

Robert E. Feldman,

Executive Secretary.

[FR Doc. 2012–20810 Filed 8–23–12; 8:45 am]

BILLING CODE 6714–01–P

FEDERAL TRADE COMMISSION

Agency Information Collection Activities; Submission for OMB Review; Comment Request; Extension

AGENCY: Federal Trade Commission (''FTC'' or ''Commission'').

ACTION: Notice.

SUMMARY: The FTC intends to ask the Office of Management and Budget (''OMB'') to extend through September 30, 2015, the current Paperwork Reduction Act (''PRA'') clearance for the information collection requirements in the Health Breach Notification Rule. That clearance expires on September 30, 2012.

DATES: Comments must be filed by September 24, 2012.

ADDRESSES: Interested parties may file a comment online or on paper, by following the instructions in the Request for Comment part of the **SUPPLEMENTARY INFORMATION** section below. Write ''Health Breach Notification Rule, PRA Comments, P–125402'' on your comment and file your comment online at *https://ftcpublic.commentworks.com/ftc/healthbreachnotificationPRA2,* by following the instructions on the web-based form. If you prefer to file your comment on paper, mail or deliver your comment to the following address: Federal Trade Commission, Office of the Secretary, Room H–113 (Annex J), 600 Pennsylvania Avenue NW., Washington, DC 20580.

FOR FURTHER INFORMATION CONTACT: Amanda Koulousias, Attorney, Division of Privacy and Identity Protection, Bureau of Consumer Protection, Federal Trade Commission, 600 Pennsylvania Avenue NW., Washington, DC 20580, (202) 326–2252.

SUPPLEMENTARY INFORMATION:

Title: Health Breach Notification Rule.

OMB Control Number: 3084–0150.

Type of Review: Extension of a currently approved collection.

Abstract: The Health Breach Notification Rule (''Rule''), 16 CFR Part 318, requires vendors of personal health records and PHR related entities [1] to provide: (1) Notice to consumers whose unsecured personally identifiable health information has been breached; and (2) notice to the Commission. The Rule only applies to electronic health records and does not include recordkeeping requirements. The Rule requires third party service providers (i.e., those companies that provide services such as billing or data storage) to vendors of personal health records and PHR related entities to provide notification to such vendors and PHR related entities following the discovery of a breach. To notify the FTC of a breach, the Commission developed a form, which is posted at *www.ftc.gov/healthbreach,* for entities subject to the rule to complete and return to the agency.

On May 29, 2012, the FTC sought comment on the information collection requirements associated with the Rule. 77 FR 31612. No comments were

[1] ''PHR related entity'' means an entity, other than a HIPAA-covered entity or an entity to the extent that it engages in activities as a business associate of a HIPAA-covered entity, that: (1) Offers products or services through the Web site of a vendor of personal health records; (2) offers products or services through the Web sites of HIPAA-covered entities that offer individuals personal health records; or (3) accesses information in a personal health record or sends information to a personal health record. 16 CFR 318.2(f).

received. Pursuant to the OMB regulations, 5 CFR Part 1320, that implement the PRA, 44 U.S.C. 3501 et seq., the FTC is providing this second opportunity for public comment while seeking OMB approval to renew the pre-existing clearance for the Rule. For more details about the Rule requirements and the basis for the calculations summarized below, see 77 FR 31612.

Estimated Annual Burden: 100 hours per breach (to determine what information has been breached, identify the affected customers, prepare the breach notice, and make the required report to the Commission) + 192 hours to process an estimated 500 calls in the event of a data breach.

Estimated Frequency: 2 breach incidents.

Total Annual Labor Cost: $13,379.

Total Annual Capital or Other Non-Labor Cost: $7,918.

Request For Comment:

You can file a comment online or on paper. For the Commission to consider your comment, we must receive it on or before September 24, 2012. Write ''Health Breach Notification Rule, PRA Comments, P–125402'' on your comment. Your comment—including your name and your state—will be placed on the public record of this proceeding, including to the extent practicable, on the public Commission Web site, at *http://www.ftc.gov/os/publiccomments.shtm.* As a matter of discretion, the Commission tries to remove individuals' home contact information from comments before placing them on the Commission Web site.

Because your comment will be made public, you are solely responsible for making sure that your comment does not include any sensitive personal information, like anyone's Social Security number, date of birth, driver's license number or other state identification number or foreign country equivalent, passport number, financial account number, or credit or debit card number. You are also solely responsible for making sure that your comment does not include any sensitive health information, like medical records or other individually identifiable health information. In addition, do not include any ''[t]rade secret or any commercial or financial information which is * * * privileged or confidential'' as provided in Section 6(f) of the FTC Act, 15 U.S.C. 46(f), and FTC Rule 4.10(a)(2), 16 CFR 4.10(a)(2). In particular, do not include competitively sensitive information such as costs, sales statistics, inventories, formulas, patterns, devices, manufacturing processes, or customer names.

If you want the Commission to give your comment confidential treatment, you must file it in paper form, with a request for confidential treatment, and you have to follow the procedure explained in FTC Rule 4.9(c).[2] Your comment will be kept confidential only if the FTC General Counsel, in his or her sole discretion, grants your request in accordance with the law and the public interest.

Postal mail addressed to the Commission is subject to delay due to heightened security screening. As a result, we encourage you to submit your comments online. To make sure that the Commission considers your online comment, you must file it at *https://ftcpublic.commentworks.com/ftc/healthbreachnotificationPRA2,* by following the instructions on the web-based form. If this Notice appears at *http://www.regulations.gov/#!home,* you also may file a comment through that Web site.

If you file your comment on paper, write ''Health Breach Notification Rule, PRA comments, P–125402'' on your comment and on the envelope, and mail or deliver it to the following address: Federal Trade Commission, Office of the Secretary, Room H–113 (Annex J), 600 Pennsylvania Avenue NW., Washington, DC 20580. If possible, submit your paper comment to the Commission by courier or overnight service.

Visit the Commission Web site at *http://www.ftc.gov* to read this Notice and the news release describing it. The FTC Act and other laws that the Commission administers permit the collection of public comments to consider and use in this proceeding as appropriate. The Commission will consider all timely and responsive public comments that it receives on or before September 24, 2012. You can find more information, including routine uses permitted by the Privacy Act, in the Commission's privacy policy, at *http://www.ftc.gov/ftc/privacy.htm.*

Comments on the disclosure and reporting requirements subject to review under the PRA should additionally be submitted to OMB. If sent by U.S. mail, they should be addressed to Office of Information and Regulatory Affairs, Office of Management and Budget, Attention: Desk Officer for the Federal Trade Commission, New Executive Office Building, Docket Library, Room 10102, 725 17th Street NW., Washington, DC 20503. Comments sent to OMB by U.S. postal mail, however, are subject to delays due to heightened security precautions. Thus, comments instead should be sent by facsimile to (202) 395–5167.

Willard K. Tom,

General Counsel.

[FR Doc. 2012–20909 Filed 8–23–12; 8:45 am]

BILLING CODE 6750–01–P

[2] In particular, the written request for confidential treatment that accompanies the comment must include the factual and legal basis for the request, and must identify the specific portions of the comment to be withheld from the public record. *See* FTC Rule 4.9(c), 16 CFR 4.9(c).

DEPARTMENT OF HEALTH AND HUMAN SERVICES

Meeting of the National Vaccine Advisory Committee

AGENCY: Department of Health and Human Services, Office of the Secretary, Office of the Assistant Secretary for Health.

ACTION: Notice of meeting.

SUMMARY: As stipulated by the Federal Advisory Committee Act, the Department of Health and Human Services (HHS) is hereby giving notice that the National Vaccine Advisory Committee (NVAC) will hold a meeting. The meeting is open to the public. Pre-registration is required for both public attendance and comment. Individuals who wish to attend the meeting and/or participate in the public comment session should register at *http://www.hhs.gov/nvpo/nvac,* email *nvpo@hhs.gov* or call 202–690–5566 and provide name, organization, and email address.

DATES: The meeting will be held on September 11–12, 2012. The meeting times and agenda will be posted on the NVAC Web site at *http://www.hhs.gov/nvpo/nvac* as soon they become available.

ADDRESSES: U.S. Department of Health and Human Services, Hubert H. Humphrey Building, Room 800, 200 Independence Avenue SW., Washington, DC 20201.

FOR FURTHER INFORMATION CONTACT: National Vaccine Program Office, U.S. Department of Health and Human Services, Room 715–H, Hubert H. Humphrey Building, 200 Independence Avenue SW., Washington, DC 20201. Phone: (202) 690–5566; Fax: (202) 690–4631; email: *nvpo@hhs.gov.*

SUPPLEMENTARY INFORMATION: Pursuant to Section 2101 of the Public Health Service Act (42 U.S.C. 300aa–1), the Secretary of Health and Human Services was mandated to establish the National Vaccine Program to achieve optimal prevention of human infectious diseases through immunization and to achieve optimal prevention against adverse

reactions to vaccines. The National Vaccine Advisory Committee was established to provide advice and make recommendations to the Director of the National Vaccine Program on matters related to the Program's responsibilities. The Assistant Secretary for Health serves as Director of the National Vaccine Program.

Among the topics to be discussed at the NVAC meeting are: Implementation of the National Vaccine Plan, pertussis, immunizations and health information technology, Healthy People 2020, immunization goals, and vaccine hesitancy. The meeting agenda will be posted on the NVAC Web site: *http://www.hhs.gov/nvpo/nvac* prior to the meeting.

Public attendance at the meeting is limited to space available. Individuals who plan to attend and need special assistance, such as sign language interpretation or other reasonable accommodations, should notify the National Vaccine Program Office at the address/phone listed above at least one week prior to the meeting. Members of the public will have the opportunity to provide comments at the NVAC meeting during the public comment periods on the agenda. Individuals who would like to submit written statements should email or fax their comments to the National Vaccine Program Office at least five business days prior to the meeting.

Dated: August 21, 2012.

Bruce Gellin,

Director, National Vaccine Program Office, Executive Secretary, National Vaccine Advisory Committee.

[FR Doc. 2012–20910 Filed 8–23–12; 8:45 am]

BILLING CODE 4150–44–P

DEPARTMENT OF HEALTH AND HUMAN SERVICES

Meetings of the National Biodefense Science Board

AGENCY: Department of Health and Human Services, Office of the Secretary.

ACTION: Notice.

SUMMARY: As stipulated by the Federal Advisory Committee Act, the U.S. Department of Health and Human Services is hereby giving notice that the National Biodefense Science Board (NBSB) will be holding a closed session under exemption 9(B) of the Government in Sunshine Act, 5 U.S.C. section 552b(c).

DATES: The closed session of the NBSB will take place on September 17, 2012, and is tentatively scheduled from 1:30 p.m. to 3:30 p.m. EST. The agenda and time for the session are subject to change as priorities dictate. Please check the NBSB Web site for the most up-to-date information.

ADDRESSES: The closed session will be held by teleconference and/or webinar and will not be open to the public as stipulated under exemption 9(B) of the Government in Sunshine Act, 5 U.S.C. section 552b(c).

FOR FURTHER INFORMATION CONTACT: The National Biodefense Science Board mailbox: *NBSB@HHS.GOV*.

SUPPLEMENTARY INFORMATION: Pursuant to section 319M of the Public Health Service Act (42 U.S.C. 247d–7f) and section 222 of the Public Health Service Act (42 U.S.C. 217a), the Department of Health and Human Services established the National Biodefense Science Board. The Board shall provide expert advice and guidance to the Secretary on scientific, technical, and other matters of special interest to the Department of Health and Human Services (HHS) regarding current and future chemical, biological, nuclear, and radiological agents, whether naturally occurring, accidental, or deliberate. The Board may also provide advice and guidance to the Secretary and/or the Assistant Secretary for Preparedness and Response (ASPR) on other matters related to public health emergency preparedness and response.

Background: The NBSB continues to review and evaluate the 2012 Public Health Emergency Medical Countermeasures Enterprise (PHEMCE) Strategy and Implementation Plan (SIP). Therefore, the Board's deliberations on the PHEMCE SIP task are being conducted in closed sessions in accordance with provisions set forth under exemption 9(B) of the Government in Sunshine Act, 5 U.S.C. section 552b(c), and with approval by the ASPR. For a full description for the basis for closing this session, please see the previous meeting notice published at 77 FR 13129 (2012).

Availability of Materials: The meeting agenda and materials will be posted on the NBSB Web site at *www.PHE.GOV/NBSB*.

Procedures for Providing Public Input: All written comments should be sent by email to *NBSB@HHS.GOV* with ''NBSB Public Comment'' as the subject line.

Dated: August 20, 2012.

Nicole Lurie,

Assistant Secretary for Preparedness and Response.

[FR Doc. 2012–20930 Filed 8–23–12; 8:45 am]

BILLING CODE 4150–37–P

DEPARTMENT OF HEALTH AND HUMAN SERVICES

Centers for Medicare & Medicaid Services

[CMS–3258–FN]

Medicare and Medicaid Programs; Continued Approval of Det Norske Veritas Healthcare's (DNVHC's) Hospital Accreditation Program

AGENCY: Centers for Medicare and Medicaid Services, HHS.

ACTION: Final notice.

SUMMARY: This final notice announces our decision to approve the Det Norske Veritas Healthcare (DNVHC) for continued recognition as a national accrediting organization for hospitals that wish to participate in the Medicare or Medicaid programs. A hospital that participates in Medicaid must also meet the Medicare conditions of participation as referenced in 42 CFR 488.5(3)(b) and 42 CFR 488.6(b). This approval is effective September 26, 2012, through September 26, 2018.

DATES: This final notice is effective September 26, 2012, through September 26, 2018.

FOR FURTHER INFORMATION CONTACT: Barbara Easterling, (410) 786–0482; Cindy Melanson, (410) 786–0310; or Patricia Chmielewski, (410) 786–6899.

SUPPLEMENTARY INFORMATION:

I. Background

Under the Medicare program, eligible beneficiaries may receive covered services in a hospital provided certain requirements are met. Section 1861(e) of the Social Security Act (the Act) establishes distinct criteria for facilities seeking designation as a hospital. Regulations concerning provider agreements are at 42 CFR part 489 and those pertaining to activities relating to the survey and certification of facilities are at part 488. The regulations at part 482 specify the conditions that a hospital must meet to participate in the Medicare program, the scope of covered services and the conditions for Medicare payment for hospitals.

Generally, to enter into an agreement, a hospital must first be certified by a state survey agency as complying with the conditions or requirements set forth in part 482. Thereafter, the hospital is subject to regular surveys by a state survey agency to determine whether it continues to meet these requirements. However, there is an alternative to surveys by state agencies. Certification by a nationally recognized accreditation program can substitute for ongoing state review.

Section 1865(a)(1) of the Act provides that, if a provider entity demonstrates through accreditation by an approved national accrediting organization (AO) that all applicable Medicare conditions are met or exceeded, we will deem those provider entities as having met the requirements. Accreditation by an accrediting organization is voluntary and is not required for Medicare participation.

If an accrediting organization is recognized by the Secretary of the Department of Health and Human Services as having standards for accreditation that meet or exceed Medicare requirements, any provider entity accredited by the national accrediting body's approved program would be deemed to have met the Medicare conditions. A national accrediting organization applying for approval of its accreditation program under part 488, subpart A, must provide us with reasonable assurance that the accrediting organization requires the accredited provider entities to meet requirements that are at least as stringent as the Medicare conditions. Our regulations concerning the approval of accrediting organizations are set forth at § 488.4 and § 488.8(d)(3). The regulations at § 488.8(d)(3) require accrediting organizations to reapply for continued approval of its accreditation program every 6 years or sooner as determined by us.

Det Norske Veritas Healthcare's current term of approval for their hospital accreditation program expires September 26, 2012.

II. Application Approval Process

Section 1865(a)(3)(A) of the Act provides a statutory timetable to ensure that our review of applications for CMS-approval of an accreditation program is conducted in a timely manner. The statute provides CMS 210 days after the date of receipt of a complete application, with any documentation necessary to make the determination, to complete our survey activities and application process. Within 60 days after receiving a complete application, we must publish a notice in the **Federal Register** that identifies the national accrediting body making the request, describes the request, and provides no less than a 30-day public comment period. At the end of the 210-day period, we must publish a notice in the **Federal Register** approving or denying the application.

III. Provisions of the Proposed Notice

In the March 23, 2012 **Federal Register** (77 FR 17070), we published a proposed notice in the announcing DNVHC's request for approval of its hospital accreditation program. In the March 23, 2012 proposed notice, we detailed our evaluation criteria. Under section 1865(a)(2) of the Act and in our regulations at § 488.4 and § 488.8, we conducted a review of DNVHC's application in accordance with the criteria specified by our regulations, which include, but are not limited to the following:

- An onsite administrative review of DNVHC's: (1) Corporate policies; (2) financial and human resources available to accomplish the proposed surveys; (3) procedures for training, monitoring, and evaluation of its surveyors; (4) ability to investigate and respond appropriately to complaints against accredited facilities; and (5) survey review and decision-making process for accreditation.
- The comparison of DNVHC's accreditation to our current Medicare hospital conditions of participation.
- A documentation review of DNVHC's survey process to determine the following:

+ Determine the composition of the survey team, surveyor qualifications, and DNVHC's ability to provide continuing surveyor training.

+ Compare DNVHC's processes to those of state survey agencies, including survey frequency, and the ability to investigate and respond appropriately to complaints against accredited facilities.

+ Evaluate DNVHC's procedures for monitoring hospitals out of compliance with DNVHC's program requirements. The monitoring procedures are used only when DNVHC identifies noncompliance. If noncompliance is identified through validation reviews, the state survey agency monitors corrections as specified at § 488.7(d).

+ Assess DNVHC's ability to report deficiencies to the surveyed facilities and respond to the facility's plan of correction in a timely manner.

+ Establish DNVHC's ability to provide us with electronic data and reports necessary for effective validation and assessment of the organization's survey process.

+ Determine the adequacy of staff and other resources.

+ Confirm DNVHC's ability to provide adequate funding for performing required surveys.

+ Confirm DNVHC's policies with respect to whether surveys are announced or unannounced.

+ Obtain DNVHC's agreement to provide us with a copy of the most current accreditation survey together with any other information related to the survey as we may require, including corrective action plans.

In accordance with section 1865(a)(3)(A) of the Act, the March 23, 2012 proposed notice also solicited public comments regarding whether DNVHC's requirements met or exceeded the Medicare conditions of participation for hospitals. We received two comments in response to our proposed notice. The commenters expressed continued support for DNVHC's hospital accreditation program. In addition, the commenters stated DNVHC's standards are closely aligned with the hospital conditions of participation, thus allowing hospitals to be in compliance with the Medicare requirements.

IV. Provisions of the Final Notice

A. Differences Between DNVHC's Standards and Requirements for Accreditation and Medicare's Conditions and Survey Requirements

We compared DNVHC's hospital requirements and survey process with the Medicare conditions of participation and survey process as outlined in the State Operations Manual (SOM). Our review and evaluation of DNVHC's hospital application, which were conducted as described in section III. of this final notice, yielded the following:

- To meet the requirements at § 482.13(a), DNVHC revised its standards to include language to address the hospital's responsibility to protect and promote each patient's rights.
- To meet the requirements at § 482.13(a)(2), DNVHC revised its standards to require prompt resolution of patient grievances.
- To meet the requirements at § 482.13(b)(3), DNVHC revised its standards to include the requirements at § 489.100, § 489.102, § 489.104 regarding advanced directive.
- To meet the requirements at § 482.52(b), DNVHC revised its standards to ensure anesthesia services are consistent with the needs and resources of the hospital.
- To meet the requirements at § 489.13, DNVHC modified its policies related to the accreditation effective date.
- To meet the survey process requirements in Appendix A of the SOM, DNVHC revised its policy outlining the minimum number of inpatient records required for review during an accreditation survey.
- To meet the requirements at § 488.4, DNVHC revised its policies to require a copy of the surveyor's annual evaluation be included in the surveyor's file.
- DNVHC revised its complaint policies to ensure all complaint investigations are conducted in

accordance with the requirements at SOM chapter five.

• DNVHC revised its policies and procedures to clarify that they do not have authority to advise facilities regarding certification issues. Instead, DNVHC must contact the CMS Regional Office on facility specific certification issues for consultation and direction.

B. Term of Approval

Based on our review and observations described in section III. of this final notice, we have determined that DNVHC's requirements for hospitals meet or exceed our requirements. Therefore, we approve DVNHC as a national accreditation organization for hospitals that request participation in the Medicare program, effective September 26, 2012, through September 26, 2018.

V. Collection of Information Requirements

This document does not impose information collection and recordkeeping requirements. Consequently, it need not be reviewed by the Office of Management and Budget under the authority of the Paperwork Reduction Act of 1995 (44 U.S.C. 35).

Authority: Section 1865 of the Social Security Act (42 U.S.C. 1395bb).

(Catalog of Federal Domestic Assistance Program No. 93.778, Medical Assistance Program; No. 93.773, Medicare—Hospital Insurance Program; and No. 93.774, Medicare—Supplementary Medical Insurance Program)

Dated: August 9, 2012.

Marilyn Tavenner,

Acting Administrator, Centers for Medicare & Medicaid Services.

[FR Doc. 2012–20199 Filed 8–23–12; 8:45 am]

BILLING CODE 4120–01–P

DEPARTMENT OF HEALTH AND HUMAN SERVICES

Centers for Medicare & Medicaid Services

[CMS–1452–NC]

Medicare and Medicaid Programs; Announcement of Application From a Hospital Requesting Waiver for Organ Procurement Service Area

AGENCY: Centers for Medicare & Medicaid Services (CMS), HHS.

ACTION: Notice with comment period.

SUMMARY: This notice with comment period announces a hospital's request for a waiver from the requirement to have an agreement with its designated Organ Procurement Organization (OPO). The request was made in accordance with section 1138(a)(2) of the Social Security Act (the Act). In addition, this notice requests comments from OPOs and the general public for our consideration in determining whether we should grant the requested waiver.

DATES: *Comment Date:* To be assured consideration, comments must be received at one of the addresses provided below, no later than 5 p.m. on October 23, 2012.

ADDRESSES: In commenting, please refer to file code CMS–1452–NC. Because of staff and resource limitations, we cannot accept comments by facsimile (FAX) transmission.

You may submit comments in one of four ways (please choose only one of the ways listed):

1. *Electronically.* You may submit electronic comments on this regulation to *http://www.regulations.gov*. Follow the ''Submit a comment'' instructions.

2. *By regular mail.* You may mail written comments to the following address ONLY:

Centers for Medicare & Medicaid Services, Department of Health and Human Services, Attention: CMS–1452–NC, P.O. Box 8010, Baltimore, MD 21244–1850.

Please allow sufficient time for mailed comments to be received before the close of the comment period.

3. *By express or overnight mail.* You may send written comments to the following address ONLY:

Centers for Medicare & Medicaid Services, Department of Health and Human Services, Attention: CMS–1452–NC, Mail Stop C4–26–05, 7500 Security Boulevard, Baltimore, MD 21244–1850.

4. *By hand or courier.* Alternatively, you may deliver (by hand or courier) your written comments ONLY to the following addresses:

a. For delivery in Washington, DC—

Centers for Medicare & Medicaid Services, Department of Health and Human Services, Room 445–G, Hubert H. Humphrey Building, 200 Independence Avenue SW., Washington, DC 20201.

(Because access to the interior of the Hubert H. Humphrey Building is not readily available to persons without Federal government identification, commenters are encouraged to leave their comments in the CMS drop slots located in the main lobby of the building. A stamp-in clock is available for persons wishing to retain a proof of filing by stamping in and retaining an extra copy of the comments being filed.)

b. For delivery in Baltimore, MD—

Centers for Medicare & Medicaid Services, Department of Health and Human Services, 7500 Security Boulevard, Baltimore, MD 21244–1850.

If you intend to deliver your comments to the Baltimore address, call telephone number (410) 786–9994 in advance to schedule your arrival with one of our staff members.

Comments erroneously mailed to the addresses indicated as appropriate for hand or courier delivery may be delayed and received after the comment period.

For information on viewing public comments, see the beginning of the **SUPPLEMENTARY INFORMATION** section.

FOR FURTHER INFORMATION CONTACT: Patricia Taft, (410) 786–4561.

SUPPLEMENTARY INFORMATION: *Inspection of Public Comments:* All comments received before the close of the comment period are available for viewing by the public, including any personally identifiable or confidential business information that is included in a comment. We post all comments received before the close of the comment period on the following Web site as soon as possible after they have been received: *http://www.regulations.gov*. Follow the search instructions on that Web site to view public comments.

Comments received timely will also be available for public inspection as they are received, generally beginning approximately 3 weeks after publication of a document, at the headquarters of the Centers for Medicare & Medicaid Services, 7500 Security Boulevard, Baltimore, Maryland 21244, Monday through Friday of each week from 8:30 a.m. to 4 p.m. To schedule an appointment to view public comments, phone 1–800–743–3951.

I. Background

Organ Procurement Organizations (OPOs) are not-for-profit organizations that are responsible for the procurement, preservation, and transport of organs to transplant centers throughout the country. Qualified OPOs are designated by the Centers for Medicare & Medicaid Services (CMS) to recover or procure organs in CMS-defined exclusive geographic service areas, pursuant to section 371(b)(1) of the Public Health Service Act (42 U.S.C. 273(b)(1)) and our regulations at 42 CFR 486.306. Once an OPO has been designated for an area, hospitals in that area that participate in Medicare and Medicaid are required to work with that OPO in providing organs for transplant, pursuant to section 1138(a)(1)(C) of the Social Security Act (the Act) and our regulations at 42 CFR 482.45.

Section 1138(a)(1)(A)(iii) of the Act provides that a hospital must notify the

designated OPO (for the service area in which it is located) of potential organ donors. Under section 1138(a)(1)(C) of the Act, every participating hospital must have an agreement only with its designated OPO to identify potential donors.

However, section 1138(a)(2)(A) of the Act provides that a hospital may obtain a waiver of the above requirements from the Secretary under certain specified conditions. A waiver allows the hospital to have an agreement with an OPO other than the one initially designated by CMS, if the hospital meets certain conditions specified in section 1138(a)(2)(A) of the Act. In addition, the Secretary may review additional criteria described in section 1138(a)(2)(B) of the Act to evaluate the hospital's request for a waiver.

Section 1138(a)(2)(A) of the Act states that in granting a waiver, the Secretary must determine that the waiver—(1) is expected to increase organ donations; and (2) will ensure equitable treatment of patients referred for transplants within the service area served by the designated OPO and within the service area served by the OPO with which the hospital seeks to enter into an agreement under the waiver. In making a waiver determination, section 1138(a)(2)(B) of the Act provides that the Secretary may consider, among other factors: (1) Cost-effectiveness; (2) improvements in quality; (3) whether there has been any change in a hospital's designated OPO due to the changes made in definitions for metropolitan statistical areas; and (4) the length and continuity of a hospital's relationship with an OPO other than the hospital's designated OPO. Under section 1138(a)(2)(D) of the Act, the Secretary is required to publish a notice of any waiver application received from a hospital within 30 days of receiving the application, and to offer interested parties an opportunity to submit comments during the 60-day comment period beginning on the publication date in the **Federal Register**.

The criteria that the Secretary uses to evaluate the waiver in these cases are the same as those described above under sections 1138(a)(2)(A) and (B) of the Act and have been incorporated into the regulations at § 486.308(e) and (f).

II. Waiver Request Procedures

On October 1995, we issued a Program Memorandum (Transmittal No. A–95–11) detailing the waiver process and discussing the information hospitals must provide in requesting a waiver. We indicated that upon receipt of a waiver request, we would publish a **Federal Register** notice to solicit public comments, as required by section 1138(a)(2)(D) of the Act.

According to these requirements, we will review the comments received. During the review process, we may consult on an as-needed basis with the Health Resources and Services Administration's Division of Transplantation, the United Network for Organ Sharing, and our regional offices. If necessary, we may request additional clarifying information from the applying hospital or others. We will then make a final determination on the waiver request and notify the hospital and the designated and requested OPOs.

III. Hospital Waiver Request

As permitted by 42 CFR 486.308(e), the following hospital has requested a waiver in order to enter into an agreement with a designated OPO other than the OPO designated for the service area in which the hospital is located:

Tri-Lakes Medical Center in Batesville, Mississippi, is requesting a waiver to work with: Mississippi Organ Recovery Agency, 12 River Bend Pl., Flowood, MS 39232.

The Hospital's Designated OPO is: Mid-South Transplant Foundation, Inc., 8001 Centerview Parkway, Suite 302, Memphis, TN 38018.

IV. Collection of Information Requirements

This document does not impose information collection and recordkeeping requirements. Consequently, it need not be reviewed by the Office of Management and Budget under the authority of the Paperwork Reduction Act of 1995 (44 U.S.C. 35).

IV. Response to Comments

Because of the large number of public comments we normally receive on **Federal Register** documents, we are not able to acknowledge or respond to them individually. We will consider all comments we receive by the date and time specified in the **DATES** section of this preamble, and, when we proceed with a subsequent document, we will respond to the comments in the preamble to that document.

(Catalog of Federal Domestic Assistance Program No. 93.773, Medicare—Hospital Insurance; Program No. 93.774, Medicare—Supplementary Medical Insurance, and Program No. 93.778, Medical Assistance Program)

Dated: August 20, 2012.

Marilyn Tavenner,

Acting Administrator, Centers for Medicare & Medicaid Services.

[FR Doc. 2012–20920 Filed 8–23–12; 8:45 am]

BILLING CODE 4120–01–P

DEPARTMENT OF HEALTH AND HUMAN SERVICES

Centers for Medicare & Medicaid Services

[CMS–4166–FN]

Medicare Program; Approved Renewal of Deeming Authority of the Accreditation Association for Ambulatory Health Care, Inc. for Medicare Advantage Health Maintenance Organizations and Local Preferred Provider Organizations

AGENCY: Centers for Medicare & Medicaid Services (CMS), HHS.

ACTION: Final notice.

SUMMARY: This notice announces our decision to renew the Medicare Advantage ''deeming authority'' of the Accreditation Association for Ambulatory Health Care, Inc. (AAAHC) for Health Maintenance Organizations and Preferred Provider Organizations for a term of 6 years.

DATES: This final notice is effective through July 10, 2018.

FOR FURTHER INFORMATION CONTACT: Abraham Weinschneider, (410) 786–5688; or Edgar Gallardo, (410) 786–0361.

SUPPLEMENTARY INFORMATION:

I. Background

Under the Medicare program, eligible beneficiaries may receive covered services through a Medicare Advantage (MA) organization that contracts with CMS. The regulations specifying the Medicare requirements that must be met for a Medicare Advantage Organization (MAO) to enter into a contract with CMS are located at 42 CFR part 422. These regulations implement Part C of Title XVIII of the Social Security Act (the Act), which specifies the services that an MAO must provide and the requirements that the organization must meet to be an MA contractor. Other relevant sections of the Act are Parts A and B of Title XVIII and Part A of Title XI pertaining to the provision of services by Medicare-certified providers and suppliers. Generally, for an entity to be an MA organization, the organization must be licensed by the State as a risk-bearing organization as set forth in part 422.

As a method of assuring compliance with certain Medicare requirements, an MA organization may choose to become accredited by a CMS-approved accrediting organization (AO). Once accredited by such a CMS-approved AO, we deem the MA organization to be compliant in one or more of six

requirements set forth in section 1852(e)(4)(B) of the Act. For an AO to be able to ''deem'' an MA plan compliant with these MA requirements, the AO must prove to CMS that its standards are at least as stringent as Medicare requirements. Health maintenance organizations (HMOs) or preferred provider organizations (PPOs) accredited by an approved AO may receive, at their request, ''deemed'' status for CMS requirements with respect to the following six MA criteria: Quality Improvement; Antidiscrimination; Access to Services; Confidentiality and Accuracy of Enrollee Records; Information on Advanced Directives; and Provider Participation Rules. (*See* 42 CFR 422.156(b)). At this time, recognition of accreditation does not include the Part D areas of review set out at § 423.165(b). AOs that apply for MA deeming authority are generally recognized by the health care industry as entities that accredit HMOs and PPOs. As we specify at § 422.157(b)(2)(ii), the term for which an AO may be approved by CMS may not exceed 6 years. For continuing approval, the AO must apply to CMS to renew its ''deeming authority'' for a subsequent approval period.

The Accreditation Association for Ambulatory Health Care, Inc. (AAAHC) was approved by CMS as an accreditation organization for MA HMOs and PPOs on July 12, 2006, and that term will expire on July 11, 2012. On December 14, 2011, AAAHC submitted an application to renew its deeming authority. On that same date, AAAHC submitted materials requested from CMS which included updates and/or changes to items set out in Federal regulations at § 422.158(a) that are prerequisites for receiving approval of its accreditation program from CMS, and which were furnished to CMS by AAAHC as a part of their renewal applications for HMOs and PPOs.

II. Deeming Applications Approval Process

Section 1865(a)(3)(A) of the Act provides a statutory timetable to ensure that our review of deeming applications is conducted in a timely manner. The Act provides us with 210 calendar days after the date of receipt of an application to complete our survey activities and application review process. Within 60 days of receiving a completed application, we must publish a notice in the **Federal Register** that identifies the national accreditation body making the request, describes the request, and provides no less than a 30-day public comment period. At the end of the 210-day period, we must publish an approval or denial of the application.

III. Proposed Notice

In the March 30, 2012, **Federal Register** (76 FR 19290), we published a proposed notice announcing AAAHC's request for continued CMS approval of its deeming authority for MA HMOs and PPOs. In the proposed notice, we detailed our evaluation criteria. Under section 1852(e)(4) of the Act and our regulations at § 422.158 (Federal review of accrediting organizations), we conducted a review of AAAHC's application in accordance with the criteria specified by our regulations, which include, but are not limited to the following:

- The types of MA plans that it would review as part of its accreditation process.
- A detailed comparison of the organization's accreditation requirements and standards with the Medicare requirements (for example, a crosswalk).
- Detailed information about the organization's survey process, including the following—
  - ++ Frequency of surveys and whether surveys are announced or unannounced.
  - ++ Copies of survey forms, and guidelines and instructions to surveyors.
  - ++ Descriptions of—
    - —The survey review process and the accreditation status decision making process;
    - —The procedures used to notify accredited MA organizations of deficiencies and to monitor the correction of those deficiencies; and
    - —The procedures used to enforce compliance with accreditation requirements.
- Detailed information about the individuals who perform surveys for the accreditation organization, including the following—
  - ++ The size and composition of accreditation survey teams for each type of plan reviewed as part of the accreditation process;
  - ++ The education and experience requirements surveyors must meet;
  - ++ The content and frequency of the in-service training provided to survey personnel;
  - ++ The evaluation systems used to monitor the performance of individual surveyors and survey teams; and
  - ++ The organization's policies and practice with respect to the participation, in surveys or in the accreditation decision process by an individual who is professionally or financially affiliated with the entity being surveyed.
- A description of the organization's data management and analysis system with respect to its surveys and accreditation decisions, including the kinds of reports, tables, and other displays generated by that system.
- A description of the organization's procedures for responding to and investigating complaints against accredited organizations, including policies and procedures regarding coordination of these activities with appropriate licensing bodies and ombudsmen programs.
- A description of the organization's policies and procedures with respect to the withholding or removal of accreditation for failure to meet the accreditation organization's standards or requirements, and other actions the organization takes in response to noncompliance with its standards and requirements.
- A description of all types (for example, full, partial) and categories (for example, provisional, conditional, temporary) of accreditation offered by the organization, the duration of each type and category of accreditation and a statement identifying the types and categories that would serve as a basis for accreditation if CMS approves the accreditation organization.
- A list of all currently accredited MA organizations and the type, category, and expiration date of the accreditation held by each of them.
- A list of all full and partial accreditation surveys scheduled to be performed by the accreditation organization as requested by CMS.
- The name and address of each person with an ownership or control interest in the accreditation organization.
- CMS also considers AAAHC's past performance in the deeming program and results of recent deeming validation reviews, or look-behind audits conducted as part of continuing Federal oversight of the deeming program under § 422.157(d).

In accordance with section 1865(a)(3)(A) of the Act, the March 30, 2012 proposed notice (76 FR 19290) also solicited public comments regarding whether AAAHC's requirements met or exceeded the Medicare conditions of participation as an accrediting organization for MA HMOs and PPOs. We received no public comments in response to our proposed notice.

IV. Provisions of the Final Notice

A. Differences Between AAAHC's Standards and Requirements for Accreditation and Medicare's Conditions and Survey Requirements

We compared the standards and survey process contained in AAAHC's application with the Medicare conditions for accreditation. Our review and evaluation of AAAHC's application for continued CMS-approval were conducted as described in section III of this final notice, and yielded the following:

- To meet the requirements at § 488.10(b), AAAHC modified its policies to include ''person(s) receiving hospice benefits prior to completing an enrollment request for an MSA plan'' as an exception where an MAO may deny enrollment based on medical status.
- AAAHC amended its crosswalk to ensure current AAAHC standards are clearly crosswalked to the following regulatory requirements: §§ 422.112(a)(7); 422.118(d); 422.202(d)(1); and 422.204(b)(2).
- To meet the amendments made at § 422.156 by the final rule published in the April 15, 2011 **Federal Register** (76 CFR 21498), AAAHC removed Quality Improvement Projects and Chronic Care Improvement Programs from its deeming process.

B. Term of Approval

Based on the review and observations described in section III of this final notice, we have determined that AAAHC's accreditation program requirements meet or exceed our requirements. Therefore, we approve AAAHC as a national accreditation organization with deeming authority for MA HMOs and PPOs, effective July 11, 2012 through July 10, 2018.

V. Collection of Information Requirements

This document does not impose information collection and recordkeeping requirements. Consequently, it need not be reviewed by the Office of Management and Budget under the authority of the Paperwork Reduction Act of 1995 (44 U.S.C. 35).

Authority: Section 1865 of the Social Security Act (42 U.S.C. 1395bb).

(Catalog of Federal Domestic Assistance Program No. 93.778, Medical Assistance Program; No. 93.773, Medicare—Hospital Insurance Program; and No. 93.774, Medicare—Supplemental Medical Insurance Program).

Dated: August 9, 2012.

Marilyn Tavenner,

Acting Administrator, Centers for Medicare & Medicaid Services.

[FR Doc. 2012–20195 Filed 8–23–12; 8:45 am]

BILLING CODE 4120–01–P

DEPARTMENT OF HEALTH AND HUMAN SERVICES

Centers for Medicare & Medicaid Services

[CMS–1596–N]

Medicare Program; Solicitation of Two Nominations to the Advisory Panel on Hospital Outpatient Payment

AGENCY: Centers for Medicare & Medicaid Services (CMS), HHS.

ACTION: Notice.

SUMMARY: This notice solicits nominations for two new members to the Advisory Panel on Hospital Outpatient Payment (HOP, the Panel). There will be two vacancies on the Panel beginning September 30, 2012.

The purpose of the Panel is to advise the Secretary of the Department of Health and Human Services (DHHS) (the Secretary) and the Administrator of the Centers for Medicare & Medicaid Services (CMS) (the Administrator) on the clinical integrity of the Ambulatory Payment Classification (APC) groups and their associated weights, and supervision of hospital outpatient services.

The Secretary rechartered the Panel in 2011 for a 2-year period effective through November 15, 2013.

DATES: *Submission of Nominations:* We will consider nominations if they are received no later than 5 p.m. (e.s.t.) October 23, 2012.

ADDRESSES: Please mail or hand deliver nominations to the following address: Centers for Medicare & Medicaid Services; Attn: Raymond Bulls, Advisory Panel on HOP; Center for Medicare, Hospital & Ambulatory Policy Group, Division of Outpatient Care; 7500 Security Boulevard, Mail Stop C4–05–17; Baltimore, MD 21244–1850.

Web site: For additional information on the Panel and updates to the Panel's activities, we refer readers to our Web site at the following: *http://www.cms.gov/Regulations-andGuidance/Guidance/FACA/AdvisoryPanelonAmbulatoryPaymentClassificationGroups.html.*

FOR FURTHER INFORMATION CONTACT:

Contact: Persons wishing to nominate individuals to serve on the Panel or to obtain further information may also contact Raymond Bulls at the following email address: *APCPanel@cms.hhs.gov* or call 410–786–7267.

Advisory Committees' Information Lines: You may also refer to the CMS Federal Advisory Committee Hotlines at 1–877–449–5659 (toll-free) or 410–786–3985 (local) for additional information.

News Media: Representatives should contact the CMS Press Office at 202–690–6145.

SUPPLEMENTARY INFORMATION:

I. Background

The Secretary is required by section 1833(t)(9)(A) of the Social Security Act (the Act), and section 222 of the Public Health Service Act (PHS Act) to consult with an expert outside advisory panel regarding the clinical integrity of the APC groups and relative payment weights that are components of the Medicare Hospital Outpatient Prospective Payment System (OPPS), and the appropriate supervision level for hospital outpatient services. The panel may use data collected or developed by entities and organizations (other than DHHS) in conducting the review. The Panel is governed by the provisions of the Federal Advisory Committee Act (FACA) (Public Law 92–463), as amended (5 U.S.C. Appendix 2), which sets forth standards for the formation and use of advisory panels.

The Charter requires that the Panel meet up to three times annually. CMS considers the technical advice provided by the Panel as we prepare the proposed and final rules to update the OPPS for the following calendar year.

The Panel shall consist of a chair and up to 19 members who are full-time employees of hospitals, hospital systems, or other Medicare providers that are subject to the OPPS. (For purposes of the Panel, consultants or independent contractors are not considered to be full-time employees in these organizations.)

The current Panel members are as follows: (**Note:** The asterisk [*] indicates the Panel members whose terms end on September 30, 2012.)

- E. L. Hambrick, M.D., J.D., Chair, a CMS Medical Officer
- Karen Borman, M.D.
- Ruth L. Bush, M.D., M.P.H.
- Lanny Copeland, M.D.
- Kari S. Cornicelli, C.P.A., FHFMA
- Dawn L. Francis, M.D., M.H.S.
- David A. Halsey, M.D.
- Brain D. Kavanagh, M.D., M.P.H.
- Judith T. Kelly, B.S.H.A., RHIT, RHIA, CCS*
- Scott Manaker, M.D., Ph.D.
- John Marshall, CRA, RCC, RT
- Jim Nelson

- Leah Osbahr
- Randall A. Oyer, M.D.*
- Jacqueline Phillips
- Daniel J. Pothen, M.S., RHIA, CHPS, CPHIMS, CCS, CCS–P, CHC
- Gregory J. Przbylski, M.D.
- Traci Rabine
- Marianna V. Spanki-Varelas M.D., Ph.D., M.B.A.
- Gale Walker

Panel members serve without compensation, according to an advance written agreement; however, for the meetings, CMS reimburses travel, meals, lodging, and related expenses in accordance with standard Government travel regulations. CMS has a special interest in ensuring, while taking into account the nominee pool, that the Panel is diverse in all respects of the following: geography; rural or urban practice; race, ethnicity, sex, and disability; medical or technical specialty; and type of hospital, hospital health system, or other Medicare provider subject to the OPPS.

Based upon either self-nominations or nominations submitted by providers or interested organizations, the Secretary, or her designee, appoints new members to the Panel from among those candidates determined to have the required expertise. New appointments are made in a manner that ensures a balanced membership under the FACA guidelines.

II. Criteria for Nominees

The Panel must be fairly balanced in its membership in terms of the points of view represented and the functions to be performed. Each Panel member must be employed full-time by a hospital, hospital system, or other Medicare provider subject to payment under the OPPS. All members must have technical expertise to enable them to participate fully in the Panel's work. Such expertise encompasses hospital payment systems; hospital medical care delivery systems; provider billing systems; APC groups; Current Procedural Terminology codes; and alpha-numeric Health Care Common Procedure Coding System codes; and the use of, and payment for, drugs, medical devices, and other services in the outpatient setting, as well as other forms of relevant expertise. For supervision deliberations, the Panel shall have members that represent the interests of Critical Access Hospitals (CAHs), who advise CMS only regarding the level of supervision for hospital outpatient services.

It is not necessary for a nominee to possess expertise in all of the areas listed, but each must have a minimum of 5 years experience and currently have full-time employment in his or her area of expertise. Generally, members of the Panel serve overlapping terms up to 4 years, based on the needs of the Panel and contingent upon the rechartering of the Panel. A member may serve after the expiration of his or her term until a successor has been sworn in.

Any interested person or organization may nominate one or more qualified individuals. Self-nominations will also be accepted. Each nomination must include the following:

- Letter of Nomination stating the reasons why the nominee should be considered.
- Curriculum Vitae or resume of the nominee.
- Written and signed statement from the nominee that the nominee is willing to serve on the Panel under the conditions described in this notice and further specified in the Charter.
- The hospital or hospital system name and address, or CAH name and address, as well as all Medicare hospital and or Medicare CAH billing numbers of the facility where the nominee is employee.

III. Copies of the Charter

To obtain a copy of the Panel's Charter, we refer readers to our Web site at the following: *http://www.cms.gov/Regulations-and-Guidance/Guidance/FACA/AdvisoryPanelonAmbulatoryPaymentClassificationGroups.html.*

IV. Collection of Information Requirements

This document does not impose information collection and recordkeeping requirements. Consequently, it need not be reviewed by the Office of Management and Budget under the authority of the Paperwork Reduction Act of 1995 (44 U.S.C. 35).

(Catalog of Federal Domestic Assistance Program No. 93.774, Medicare—Supplementary Medical Insurance Program).

Dated: August 8, 2012.

Marilyn Tavenner,

Acting Administrator, Centers for Medicare & Medicaid Services.

[FR Doc. 2012–20069 Filed 8–23–12; 8:45 am]

BILLING CODE 4120–01–P

DEPARTMENT OF HEALTH AND HUMAN SERVICES

Health Resources and Services Administration

National Advisory Committee on Rural Health and Human Services; Notice of Meeting

In accordance with section 10(a)(2) of the Federal Advisory Committee Act (Pub. L. 92–463), notice is hereby given that the following committee will convene its seventy-second meeting.

Name: National Advisory Committee on Rural Health and Human Services.

Dates and Times: September 26, 2012, 9:00 a.m.–5 p.m.; September 27, 2012, 9:00 a.m.–5 p.m.; September 28, 2012, 8:45 a.m.–11:15 a.m.

Place: Radisson Hotel & Suites Austin Downtown, 111 East Cesar Chavez Street, Austin, TX 78701.

Phone: (512) 478–9611.

Status: The meeting will be open to the public.

Purpose: The National Advisory Committee on Rural Health and Human Services provides advice and recommendations to the Secretary with respect to the delivery, research, development, and administration of health and human services in rural areas.

Agenda: Wednesday morning at 9:00 a.m., the meeting will be called to order by the Chairman of the Committee, the Honorable Ronnie Musgrove. The Committee will be examining the future of the rural health care infrastructure and the rural effects of recent changes to the Temporary Assistance for Needy Families (TANF) Program. The day will conclude with a period of public comment at approximately 5:00 p.m.

Thursday morning at approximately 9:00 a.m., the Committee will break into Subcommittees and depart for site visits to rural healthcare and human services providers in Texas. One panel from the Health Infrastructure Subcommittee will visit the Llano Memorial Hospital in Llano, TX. Another panel from the Health Infrastructure Subcommittee will visit Gonzales Healthcare System—Memorial Hospital, in Gonzales, TX. The day will conclude at the Radisson Hotel & Suites Austin Downtown with a period of public comment at approximately 5:00 p.m.

The final session will be convened on Friday morning at 9 a.m. The Committee will summarize key findings from the meeting and develop a work plan for the next quarter and the following meeting. The meeting will adjourn at 11:15 a.m.

FOR FURTHER INFORMATION CONTACT: Steve Hirsch, MSLS, Executive

Secretary, National Advisory Committee on Rural Health and Human Services, Health Resources and Services Administration, Parklawn Building, Room 5A–05, 5600 Fishers Lane, Rockville, MD 20857, Telephone (301) 443–0835, Fax (301) 443–2803.

Persons interested in attending any portion of the meeting should contact Nathan Nash at the Office of Rural Health Policy (ORHP) via telephone at (301) 443–0835 or by email at *nnash@hrsa.gov*. The Committee meeting agenda will be posted on ORHP's Web site *http://www.hrsa.gov/advisorycommittees/rural/*.

Dated: August 16, 2012.

Bahar Niakan,

Director, Division of Policy and Information Coordination.

[FR Doc. 2012–20932 Filed 8–23–12; 8:45 am]

BILLING CODE 4165–15–P

DEPARTMENT OF HEALTH AND HUMAN SERVICES

National Institutes of Health

National Institute of Biomedical Imaging and Bioengineering; Notice of Closed Meeting

Pursuant to section 10(d) of the Federal Advisory Committee Act, as amended (5 U.S.C. App.), notice is hereby given of the following meeting.

The meeting will be closed to the public in accordance with the provisions set forth in sections 552b(c)(4) and 552b(c)(6), Title 5 U.S.C., as amended. The grant applications and the discussions could disclose confidential trade secrets or commercial property such as patentable material, and personal information concerning individuals associated with the grant applications, the disclosure of which would constitute a clearly unwarranted invasion of personal privacy.

Name of Committee: National Institute of Biomedical Imaging and Bioengineering Special Emphasis Panel NIBIB P41 Review (2013/01).

Date: October 7–9, 2012.

Time: 6 p.m. to 1 p.m.

Agenda: To review and evaluate grant applications.

Place: Holiday Inn Pittsburgh University Center, 100 Lytton Avenue, Pittsburgh, PA 15213.

Contact Person: Ruth Grossman, DDS, Scientific Review Officer, National Institute of Biomedical Imaging, and Bioengineering, National Institutes of Health, 6707 Democracy Boulevard, Suite 960, Bethesda, MD 20892, 301–496–8775, *grossmanrs@mail.nih.gov.*

Dated: August 20, 2012.

Melanie J. Gray,

Program Analyst, Office of Federal Advisory Committee Policy.

[FR Doc. 2012–20804 Filed 8–23–12; 8:45 am]

BILLING CODE 4140–01–P

DEPARTMENT OF HEALTH AND HUMAN SERVICES

National Institutes of Health

National Institute of Arthritis and Musculoskeletal and Skin Diseases; Notice of Closed Meeting

Pursuant to section 10(d) of the Federal Advisory Committee Act, as amended (5 U.S.C. App.), notice is hereby given of the following meeting.

The meeting will be closed to the public in accordance with the provisions set forth in sections 552b(c)(4) and 552b(c)(6), Title 5 U.S.C., as amended. The grant applications and the discussions could disclose confidential trade secrets or commercial property such as patentable material, and personal information concerning individuals associated with the grant applications, the disclosure of which would constitute a clearly unwarranted invasion of personal privacy.

Name of Committee: National Institute of Arthritis and Musculoskeletal and Skin Diseases Special Emphasis Panel: Tissue Engineering and Regenerative Medicine.

Date: September 21, 2012.

Time: 1:30 p.m. to 5:30 p.m.

Agenda: To review and evaluate grant applications.

Place: National Institutes of Health, One Democracy Plaza, 6701 Democracy Boulevard, Bethesda, MD 20892, (Telephone Conference Call).

Contact Person: Xincheng Zheng, Ph.D., MD, Scientific Review Officer.

(Catalogue of Federal Domestic Assistance Program Nos. 93.846, Arthritis, Musculoskeletal and Skin Diseases Research, National Institutes of Health, HHS)

Dated: August 20, 2012.

Carolyn A. Baum,

Program Analyst, Office of Federal Advisory Committee Policy.

[FR Doc. 2012–20816 Filed 8–23–12; 8:45 am]

BILLING CODE 4140–01–P

DEPARTMENT OF HEALTH AND HUMAN SERVICES

National Institutes of Health

Center for Scientific Review; Notice of Closed Meetings

Pursuant to section 10(d) of the Federal Advisory Committee Act, as amended (5 U.S.C. App.), notice is hereby given of the following meetings.

The meetings will be closed to the public in accordance with the provisions set forth in sections 552b(c)(4) and 552b(c)(6), Title 5 U.S.C., as amended. The grant applications and the discussions could disclose confidential trade secrets or commercial property such as patentable material, and personal information concerning individuals associated with the grant applications, the disclosure of which would constitute a clearly unwarranted invasion of personal privacy.

Name of Committee: Healthcare Delivery and Methodologies Integrated Review Group Community Influences on Health Behavior.

Date: September 20–21, 2012.

Time: 8 a.m. to 5 p.m.

Agenda: To review and evaluate grant applications.

Place: Embassy Suites at the Chevy Chase Pavilion, 4300 Military Road NW., Washington, DC 20015.

Contact Person: Wenchi Liang, Ph.D., Scientific Review Officer, Center for Scientific Review, National Institutes of Health, 6701 Rockledge Drive, Room 3150, MSC 7770, Bethesda, MD 20892, 301–435–0681, *liangw3@csr.nih.gov*.

Name of Committee: Oncology 2—Translational Clinical Integrated Review Group Drug Discovery and Molecular Pharmacology Study Section.

Date: September 24–25, 2012.

Time: 8 a.m. to 4 p.m.

Agenda: To review and evaluate grant applications.

Place: Hotel Nikko San Francisco, 222 Mason Street, San Francisco, CA 94102.

Contact Person: Jeffrey Smiley, Ph.D., Scientific Review Officer, Center for Scientific Review, National Institutes of Health, 6701 Rockledge Drive, Room 6194, MSC 7804, Bethesda, MD 20892, 301–594–7945, *smileyja@csr.nih.gov*.

Name of Committee: Center for Scientific Review Special Emphasis Panel Member Conflict: Adult and Child Psychopathology and Disorders of Development and Aging.

Date: September 24, 2012.

Time: 1 p.m. to 4 p.m.

Agenda: To review and evaluate grant applications.

Place: National Institutes of Health, 6701 Rockledge Drive, Bethesda, MD 20892, (Telephone Conference Call).

Contact Person: Mark Lindner, Ph.D., Scientific Review Officer, Center for Scientific Review, National Institutes of Health, 6701 Rockledge Drive, Room 3182, MSC 7770, Bethesda, MD 20892, 301–435–0913, *mark.lindner@csr.nih.gov*.

Name of Committee: Center for Scientific Review Special Emphasis Panel RFA Panel: Investigations on Primary Immunodeficiency Diseases.

Date: September 24, 2012.

Time: 12 p.m. to 3 p.m.

Agenda: To review and evaluate grant applications.

Place: National Institutes of Health, 6701 Rockledge Drive, Bethesda, MD 20892, (Virtual Meeting).

Contact Person: Scott Jakes, Ph.D., Scientific Review Officer, Center for Scientific Review, National Institutes of Health, 6701 Rockledge Drive, Room 4198, MSC 7812, Bethesda, MD 20892, 301–495–1506, *jakesse@mail.nih.gov*.

(Catalogue of Federal Domestic Assistance Program Nos. 93.306, Comparative Medicine; 93.333, Clinical Research, 93.306, 93.333, 93.337, 93.393–93.396, 93.837–93.844, 93.846–93.878, 93.892, 93.893, National Institutes of Health, HHS)

Dated: August 20, 2012.

Melanie J. Gray,

Program Analyst, Office of Federal Advisory Committee Policy.

[FR Doc. 2012–20805 Filed 8–23–12; 8:45 am]

BILLING CODE 4140–01–P

DEPARTMENT OF HEALTH AND HUMAN SERVICES

Substance Abuse and Mental Health Services Administration

Center for Mental Health Services (CMHS); Revised as of August 21, 2012; Amendment of Meeting Notice

Pursuant to Public Law 92–463, notice is hereby given of an amendment of meeting agenda, date change, and participant link change for the Substance Abuse and Mental Health Services Administration's (SAMHSA), Center for Mental Health Services National Advisory Council (CMHS NAC).

Public notice was published in the **Federal Register** on August 3, 2012, Volume 77, Number 150, page 46444 announcing that the CMHS National Advisory Council would be convening on August 24, 2012 at 1 Choke Cherry Road, Rockville, MD. The discussion and evaluation of grant applications will be added to the agenda. Therefore, a portion of the meeting will be closed to the public as determined by the SAMHSA Administrator, in accordance with Title 5 U.S.C. 552b(c)(6) and 5 U.S.C. App. 2, § 10(d). Participants can join the event directly at *https://www.mymeetings.com/nc/join.php?i=PW9819021&p=CSAUNDERS&t=c*.

The Conference number is PW9819021 and Passcode is CSAUNDERS. For additional information, contact the CMHS National Advisory Council, Acting Designated Federal Official, Crystal C. Saunders, 1 Choke Cherry Road, Room 6–1063, Rockville, MD 20857, telephone number 240–276–1117, fax number 240–276–1395 and email *crystal.saunders@samhsa.hhs.gov*.

This notice is being published less than 15 days prior to the meeting due to the timing limitations imposed by the review and funding cycle.

Summer King,

Statistician.

[FR Doc. 2012–20851 Filed 8–23–12; 8:45 am]

BILLING CODE 4162–20–P

DEPARTMENT OF HOMELAND SECURITY

Office of the Secretary

Exercise of Authority Under the Immigration and Nationality Act

AGENCY: Office of the Secretary, DHS.

ACTION: Notice of determination.

Authority: 8 U.S.C. 1182(d)(3)(B)(i).

Following consultations with the Secretary of State and the Attorney General, I hereby conclude, as a matter of discretion in accordance with the authority granted to me by section 212(d)(3)(B)(i) of the Immigration and Nationality Act (INA), 8 U.S.C. 1182(d)(3)(B)(i), as amended, as well as the foreign policy and national security interests deemed relevant in these consultations, that section 212(a)(3)(B) of the INA, 8 U.S.C. 1182(a)(3)(B), excluding subclause (i)(II), shall not apply, with respect to an alien, for any activity or association relating to the uprisings against the government of Saddam Hussein in Iraq between March 1 and April 5, 1991, provided that the alien satisfies the relevant agency authority that the alien:

(a) Is seeking a benefit or protection under the INA and has been determined to be otherwise eligible for the benefit or protection;

(b) Has undergone and passed all relevant background and security checks;

(c) Has fully disclosed, to the best of his or her knowledge, in all relevant applications and interviews with U.S. government representatives and agents, the nature and circumstances of all activities or associations falling within the scope of section 212(a)(3)(B) of the INA, 8 U.S.C. 1182(a)(3)(B);

(d) Has not participated in, or knowingly provided material support to, terrorist activities that targeted noncombatant persons not affiliated with Saddam Hussein's regime from March 1 through April 5 of 1991, or U.S. interests;

(e) Has not engaged in terrorist activity, not otherwise exempted, outside the context of resistance activities directed against Saddam Hussein's regime from March 1 through April 5 of 1991;

(f) Poses no danger to the safety and security of the United States; and

(g) Warrants an exemption from the relevant inadmissibility provision(s) in the totality of the circumstances.

Implementation of this determination will be made by U.S. Citizenship and Immigration Services (USCIS), in consultation with U.S. Immigration and Customs Enforcement (ICE), or by U.S. consular officers, as applicable, who shall ascertain, to their satisfaction, and in their discretion, that the particular applicant meets each of the criteria set forth above.

This exercise of authority may be revoked as a matter of discretion and without notice at any time, with respect to any and all persons subject to it. Any determination made under this exercise of authority as set out above can inform but shall not control a decision regarding any subsequent benefit or protection application, unless such exercise of authority has been revoked.

This exercise of authority shall not be construed to prejudice, in any way, the ability of the U.S. government to commence subsequent criminal or civil proceedings in accordance with U.S. law involving any beneficiary of this exercise of authority (or any other person). This exercise of authority creates no substantive or procedural right or benefit that is legally enforceable by any party against the United States or its agencies or officers or any other person.

In accordance with section 212(d)(3)(B)(ii) of the INA, 8 U.S.C. 1182(d)(3)(B)(ii), a report on the aliens to whom this exercise of authority is applied, on the basis of case-by-case decisions by the U.S. Department of Homeland Security or by the U.S. Department of State, shall be provided to the specified congressional committees not later than 90 days after the end of the fiscal year.

This determination is based on an assessment related to the national security and foreign policy interests of the United States as they apply to the particular persons described herein and shall not have any application with respect to other persons or to other provisions of U.S. law.

Dated: August 17, 2012.

Janet Napolitano,

Secretary of Homeland Security.

[FR Doc. 2012–20789 Filed 8–23–12; 8:45 am]

BILLING CODE 9110–9M–P

DEPARTMENT OF HOMELAND SECURITY

Federal Emergency Management Agency

[Internal Agency Docket No. FEMA–4067–DR; Docket ID FEMA–2012–0002]

Colorado; Amendment No. 4 to Notice of a Major Disaster Declaration

AGENCY: Federal Emergency Management Agency, DHS.

ACTION: Notice.

SUMMARY: This notice amends the notice of a major disaster declaration for the State of Colorado (FEMA–4067–DR), dated June 28, 2012, and related determinations.

DATES: *Effective Date:* August 17, 2012.

FOR FURTHER INFORMATION CONTACT: Peggy Miller, Office of Response and Recovery, Federal Emergency Management Agency, 500 C Street SW., Washington, DC 20472, (202) 646–3886.

SUPPLEMENTARY INFORMATION: The notice of a major disaster declaration for the State of Colorado is hereby amended to include the following area among those areas determined to have been adversely affected by the event declared a major disaster by the President in his declaration of June 28, 2012.

Teller County for emergency protective measures (Category B) under the Public Assistance program.

The following Catalog of Federal Domestic Assistance Numbers (CFDA) are to be used for reporting and drawing funds: 97.030, Community Disaster Loans; 97.031, Cora Brown Fund; 97.032, Crisis Counseling; 97.033, Disaster Legal Services; 97.034, Disaster Unemployment Assistance (DUA); 97.046, Fire Management Assistance Grant; 97.048, Disaster Housing Assistance to Individuals and Households in Presidentially Declared Disaster Areas; 97.049, Presidentially Declared Disaster Assistance—Disaster Housing Operations for Individuals and Households; 97.050, Presidentially Declared Disaster Assistance to Individuals and Households—Other Needs; 97.036, Disaster Grants—Public Assistance (Presidentially Declared Disasters); 97.039, Hazard Mitigation Grant.)

W. Craig Fugate,

Administrator, Federal Emergency Management Agency.

[FR Doc. 2012–20869 Filed 8–23–12; 8:45 am]

BILLING CODE 9111–23–P

DEPARTMENT OF HOUSING AND URBAN DEVELOPMENT

[Docket No. FR–5601–N–33]

Federal Property Suitable as Facilities To Assist the Homeless

AGENCY: Office of the Assistant Secretary for Community Planning and Development, HUD.

ACTION: Notice.

SUMMARY: This Notice identifies unutilized, underutilized, excess, and surplus Federal property reviewed by HUD for suitability for use to assist the homeless.

FOR FURTHER INFORMATION CONTACT: Juanita Perry, Department of Housing and Urban Development, 451 Seventh Street SW., Room 7266, Washington, DC 20410; telephone (202) 402–3970; TTY number for the hearing- and speech-impaired (202) 708–2565 (these telephone numbers are not toll-free), or call the toll-free Title V information line at 800–927–7588.

SUPPLEMENTARY INFORMATION: In accordance with 24 CFR part 581 and section 501 of the Stewart B. McKinney Homeless Assistance Act (42 U.S.C. 11411), as amended, HUD is publishing this Notice to identify Federal buildings and other real property that HUD has reviewed for suitability for use to assist the homeless. The properties were reviewed using information provided to HUD by Federal landholding agencies regarding unutilized and underutilized buildings and real property controlled by such agencies or by GSA regarding its inventory of excess or surplus Federal property. This Notice is also published in order to comply with the December 12, 1988 Court Order in *National Coalition for the Homeless* v. *Veterans Administration,* No. 88–2503–OG (D.D.C.).

Properties reviewed are listed in this Notice according to the following categories: Suitable/available, suitable/unavailable, suitable/to be excess, and unsuitable. The properties listed in the three suitable categories have been reviewed by the landholding agencies, and each agency has transmitted to HUD: (1) Its intention to make the property available for use to assist the homeless, (2) its intention to declare the property excess to the agency's needs, or (3) a statement of the reasons that the property cannot be declared excess or made available for use as facilities to assist the homeless.

Properties listed as suitable/available will be available exclusively for homeless use for a period of 60 days from the date of this Notice. Where property is described as for ''off-site use only'' recipients of the property will be required to relocate the building to their own site at their own expense. Homeless assistance providers interested in any such property should send a written expression of interest to HHS, addressed to Theresa Ritta, Division of PropertyManagement, Program Support Center, HHS, room 5B–17, 5600 Fishers Lane, Rockville, MD 20857; (301) 443–2265. (This is not a toll-free number.) HHS will mail to the interested provider an application packet, which will include instructions for completing the application. In order to maximize the opportunity to utilize a suitable property, providers should submit their written expressions of interest as soon as possible. For complete details concerning the processing of applications, the reader is encouraged to refer to the interim rule governing this program, 24 CFR part 581.

For properties listed as suitable/to be excess, that property may, if subsequently accepted as excess by GSA, be made available for use by the homeless in accordance with applicable law, subject to screening for other Federal use. At the appropriate time, HUD will publish the property in a Notice showing it as either suitable/available or suitable/unavailable.

For properties listed as suitable/unavailable, the landholding agency has decided that the property cannot be declared excess or made available for use to assist the homeless, and the property will not be available.

Properties listed as unsuitable will not be made available for any other purpose for 20 days from the date of this Notice. Homeless assistance providers interested in a review by HUD of the determination of unsuitability should call the toll free information line at 1–800–927–7588 for detailed instructions or write a letter to Ann Marie Oliva at the address listed at the beginning of this Notice. Included in the request for review should be the property address (including zip code), the date of publication in the **Federal Register**, the landholding agency, and the property number.

For more information regarding particular properties identified in this Notice (i.e., acreage, floor plan, existing sanitary facilities, exact street address), providers should contact the appropriate landholding agencies at the following addresses *AIR FORCE:* Mr. Robert Moore, Air Force Real Property Agency, 143 Billy Mitchell Blvd., San Antonio, TX 78226, (210) 925–3047; *ENERGY:* Mr. Mark Price, Department of Energy, Office of Engineering &

Construction Management, MA–50, 1000 Independence Ave. SW., Washington, DC 20585: (202) 586–5422; *GSA:* Mr. Flavio Peres, General Services Administration, Office of Real Property Utilization and Disposal, 1800 F Street NW., Room 7040, Washington, DC 20405, (202) 501–0084; *INTERIOR:* Mr. Michael Wright, Acquisition & Property Management, Department of the Interior, 1801 Pennsylvania Ave. NW., 4th Floor, Washington, DC 20006: 202–254–5522; *NAVY:* Mr. Steve Matteo, Department of the Navy, Asset Management Division, Naval Facilities Engineering Command, Washington Navy Yard, 1330 Patterson Ave. SW., Suite 1000, Washington, DC 20374; (202) 685–9426 (These are not toll-free numbers).

Dated: August 16, 2012.

Ann Marie Oliva,

Deputy Assistant Secretary, for Special Needs (Acting).

TITLE V, FEDERAL SURPLUS PROPERTY PROGRAM FEDERAL REGISTER REPORT FOR 08/24/2012

Suitable/Available Properties

Building

Arkansas

Sulphur Rock Radio Station
N. Main Street
Sulphur Rock AR 72579
Landholding Agency: GSA
Property Number: 54201220008
Status: Excess
GSA Number: 7–B–AR–576–AA
Comments: Building #1: 152 sf.; building #2:59 sf; radio tower

Florida

4 Structures
142 Keeper's Cottage Way
Cape San Blas FL 32456
Landholding Agency: GSA
Property Number: 54201230008
Status: Surplus
GSA Number: 4–D–FL–1265AA
Directions: Cape San Blas Lighthouse, Keeper's Quarters A, Keeper's Quarter B, & an Oil/Storage
Comments: Off-site removal only, all structures must remain together; eligible as Historic & will be conveyed w/a historic covenant; transferee must maintain structures in accordance with covenant; repairs needed; contact GSA 404–331–3625 for further details

Guam

Bldg. 6121
U.S. Naval Base
PITI GU 96540
Landholding Agency: Navy
Property Number: 77201230010
Status: Unutilized
Comments: Off-site removal only; 234 sf.; bathroom; deteriorating conditions; major renovations needed; restricted area; visitor's pass required & issued by Security Dept.

Bldg. 6120
Recreation Pavilion
PITI GU 96540
Landholding Agency: Navy
Property Number: 77201230011
Status: Excess
Comments: Off-site removal only; 286 sf.; deteriorating conditions; major renovations needed; restricted area; visitor's pass required & issued by Security Dept.

Bldg. 793
Fern St.
Santa Rita GU 96540
Landholding Agency: Navy
Property Number: 77201230012
Status: Excess
Comments: Off-site removal only; 2,411 sf.; bachelor enlisted quarters; deteriorating conditions; major renovations needed; restricted area; vistior's pass required & issued by Sec. Dept.

16 Buildings
S. Columbus Ave./Lotus Cir/Fern St.
Santa Rita GU 96540
Landholding Agency: Navy
Property Number: 77201230013
Status: Excess
Directions: 766 thru 768, 770 thru 773, 775 thru 777, 794, 795, 797 thru 800
Comments: Off-site removal only; 2,562 sf. per bldg.; deteriorating conditions; renovations needed; enlisted quarters; restricted area; visitor's pass required & issued by Security Dept.

13 Buildings
Jasmin/South Columbus/Lotus Circle St.
Santa Rita GU 96540
Landholding Agency: Navy
Property Number: 77201230014
Status: Excess
Directions: 754 thru 761, 781, 782, 784 thru 786
Comments: Off-site removal only 2,038 sf. per bldg.; bachelor enlisted quarters; deteriorating conditions; major renovations needed; restricted area; visitor's pass required & issued

17 Buildings
South Tipalao
Santa Rita GU 96540
Landholding Agency: Navy
Property Number: 77201230015
Status: Excess
Directions: 733, 735, 736, 737, 738, 739, 740, 741, 742, 744, 746, 747, 748, 749, 750, 751, 752
Comments: Off-site removal only; 2,038 sf. per bldg.; bachelor enlisted quarters; deteriorating conditions; major renovations needed; restricted area; visitor's pass required issued by

8 Buildings
Begonia St.
Santa Rita GU 96540
Landholding Agency: Navy
Property Number: 77201230016
Status: Excess
Directions: 717, 718, 719, 720, 721, 725, 726, 727
Comments: Off-site removal only; 2,038 sf. per bldg.; bachelor enlisted quarters; major renovations needed; restricted area; visitor's pass required & issued by Security Dept.

Guam

3 Buildings
Anthurium St.
Santa Rita GU 96540
Landholding Agency: Navy
Property Number: 77201230018
Status: Excess
Directions: 703, 704, 705
Comments: Off-site removal only; 2,562 sf. per bldg; bachelor enlisted quarters; deteriorating conditions; major renovations needed; restricted area; vistior's pass required & issued by

9 Buildings
Anthurium St.
Santa Rita GU 96540
Landholding Agency: Navy
Property Number: 77201230019
Status: Excess
Directions: 701, 706, 707, 708, 709, 710, 711, 712, 713
Comments: Off-site removal only; 2,038 sf. per bldg.; bachelor enlisted quarters; deteriorating conditions; major renovations needed; restricted area; vistior's pass required & issued by

Bldg. 612
Leary St., South Tipalao
Santa Rita GU 96540
Landholding Agency: Navy
Property Number: 77201230020
Status: Excess
Comments: Off-site removal only; 6,280 sf.; bachelor enlisted quarters; deteriorating conditions; major renovations needed; restricted area; vistior's pass required & issued by Security Dept.

Bldg. 605
U.S. Naval Base
Santa Rita GU 96540
Landholding Agency: Navy
Property Number: 77201230021
Status: Excess
Directions: Leary Street, South Tipalao
Comments: Off-site removal only; 4,776 sf.; bachelor enlisted quarters; deteriorating conditions; major renovations needed; restricted area; vistior's pass required & issued by Security Dept.

Bldg. 603
U.S. Naval Base
Santa Rita GU 96540
Landholding Agency: Navy
Property Number: 77201230022
Status: Excess
Directions: Leary Street, South Tipalao
Comments: Off-site removal only; 3,672 sf.; bachelor enlisted quarters; deteriorating conditions; major renovations needed; restricted area; vistior's pass required & issued by Security Dept.

7 Buildings
Leary Street, South Tipalao
Santa Rita GU 96540
Landholding Agency: Navy
Property Number: 77201230023
Status: Excess
Directions: 602, 604, 606, 607, 608, 609, 610
Comments: Off-site removal only; 3,164 sf. per bldg.; bachelor enlisted quarters; deteriorating conditions; major renovations needed; restricted area; vistior's pass required & issued by

Bldg. 601
U.S. Naval Base

Santa Rita GU 96540
Landholding Agency: Navy
Property Number: 77201230024
Status: Excess
Directions: Leary Street, South Tipalao
Comments: Off-site removal only; 2,906 sf.; bachelor enlisted quarters; deteriorating conditions; major renovations needed; restricted area; vistior's pass required & issued by Security Dept.

Bldg. 27
U.S. Naval Base
Santa Rita GU 96540
Landholding Agency: Navy
Property Number: 77201230025
Status: Unutilized
Comments: Off-site removal only; 1,750 sf.; steam plant; deteriorating conditions; major renovations needed; restricted area; vistior's pass required & issued by Security Dept.

Michigan

Natl Weather Svc Ofc
214 West 14th Ave.
Sault Ste. Marie Co: Chippewa MI
Landholding Agency: GSA
Property Number: 54200120010
Status: Excess
GSA Number: 1–C–MI–802
Comments: Previously unavailable; however, the property is 'available' as a facility to assist the homess; 2230 sq. ft., presence of asbestos, most recent use—office

Minnesota

Noyes Land Port of Entry
SW Side of US Rte. 75
Noyes MN 56740
Landholding Agency: GSA
Property Number: 54201230007
Status: Excess
GSA Number: 1–G–MN–0593
Directions: One main bldg.; one storage; approx. 16,000 and 900 sf. respectively
Comments: Sits on 2.29 acres; approx. 17,000 sf. total of bldg. space; office/governmental

Pennsylvania

Old Marienville Compound
110 South Forest St.
Marienville PA 16239
Landholding Agency: GSA
Property Number: 54201230001
Status: Excess
GSA Number: 4–A–PA–808AD
Directions: 10 bldgs.; wood farm duplex; office/garage; pole bard; shop; (2) wood sheds; block shed; trailer; carport; toilet bldg.
Comments: Sq. ft. for ea. bldg. on property varies; contact GSA for specific sq. ft.; Forest Service Admin. complex; mold and lead identified; historic property

Utah

2 Buildings
9160 N. Hwy 83
Corinne UT 84307
Landholding Agency: GSA
Property Number: 54201230003
Status: Excess
GSA Number: 7–Z–UT–0533
Directions: T077 & T078; NASA Shuttle Storage Warehouses
Comments: Off-site removal only; approx. 3,200 sf. each; storage

Suitable/Available Properties

Land

California

Drill Site #26
Ford City CA 93268
Landholding Agency: GSA
Property Number: 54201040011
Status: Surplus
GSA Number: 9–B–CA–1673–AA
Comments: 2.07 acres, mineral rights, utility easements

Kansas

1.64 Acres
Wichita Automated Flight Service
Anthony KS 67003
Landholding Agency: GSA
Property Number: 54201230002
Status: Excess
GSA Number: 7–U–KS–0526
Comments: Agricultural surroundings; remedial action has been taken for asbestos removal

Missouri

Long Branch Lake
30174 Visitor Center Rd.
Macon MO 63552
Landholding Agency: GSA
Property Number: 54201230006
Status: Surplus
GSA Number: 7–D–MO–0579
Comments: 7.60 acres

Suitable/Unavailable Properties

Building

Alabama

Federal Bldg. & Courthouse
1118 Greensboro Ave.
Tuscaloosa AL 35401
Landholding Agency: GSA
Property Number: 54201220005
Status: Surplus
GSA Number: AL–0074–ZZ
Comments: 10,494 sf.; federal offices/courthouse; roof needs extensive repairs; severe leaks around drains, asbestos identified

District of Columbia

West Heating Plant
1051 29th St. NW
Washington DC 20007
Landholding Agency: GSA
Property Number: 54201140006
Status: Surplus
GSA Number: DC–497–1
Comments: Redetermination: 1.97 acres; current use: industry; transferee is required to remediate significant contaminants which includes arsenic, PCBs, and benzo (a) pyrene

Georgia

5 Acres
Former CB7 Radio Communication
Townsend GA 31331
Landholding Agency: GSA
Property Number: 54201210008
Status: Excess
GSA Number: 4–U–GA–885AA
Comments: 5.0 acres; current use: unknown; property located in 100 yr. floodplain-not in floodway and no impact in using property; contact GSA for more details

Idaho

Moscow Federal Bldg.
220 East 5th Street
Moscow ID 83843
Landholding Agency: GSA
Property Number: 54201140003
Status: Surplus
GSA Number: 9–G–ID–573
Comments: 11,000 sq. ft.; current use: office

Illinois

1LT A.J. Ellison
Army Reserve
Wood River IL 62095
Landholding Agency: GSA
Property Number: 54201110012
Status: Excess
GSA Number: 1–D–II–738
Comments: 17,199 sq. ft. for the Admin. Bldg., 3,713 sq. ft. for the garage, public space (roads and hwy) and utilities easements, asbestos and lead base paint identified, most current

Iowa

U.S. Army Reserve
620 West 5th St.
Garner IA 50438
Landholding Agency: GSA
Property Number: 54200920017
Status: Excess
GSA Number: 7–D–IA–0510
Comments: 5743 sq. ft., presence of lead paint, most recent use—offices/classrooms/storage, subject to existing easements

Maine

Columbia falls Radar Site
Tibbetstown Road
Columbia Falls ME 04623
Landholding Agency: GSA
Property Number: 54201140001
Status: Excess
GSA Number: 1–D–ME–0687
Directions: Buildings 1, 2, 3, and 4
Comments: Four bldgs. totaling 20,375 sq.ft. each one-story; current use: varies among properties

Maryland

Appraisers Store
Baltimore MD 21202
Landholding Agency: GSA
Property Number: 54201030016
Status: Excess
GSA Number: 4–G–MD–0623
Comments: Redetermination: 169,801 sq. ft., most recent use—federal offices, listed in the Natl Register of Historic Places, use restrictions

Consumer Products Safety Commission
10901 Darenestown Rd.
Gaithersburg MD 20878
Landholding Agency: GSA
Property Number: 54201220004
Status: Surplus
GSA Number: NCR–G–MR–1107–01
Directions: Property includes building and land
Comments: 37,543 sf.; office/warehouse space; secured area; however, will not interfere w/conveyance; contact GSA for further details

Michigan

CPT George S. Crabbe USARC
2901 Webber Street

Saginaw MI
Landholding Agency: GSA
Property Number: 54201030018
Status: Excess
GSA Number: 1–D–MI–835
Comments: 3891 sq. ft., 3-bay garage maintenance building

Beaver Island High Level Site
South End Road
Beaver Island MI 49782
Landholding Agency: GSA
Property Number: 54201140002
Status: Excess
GSA Number: 1–X–MI–664B
Comments: 89 sq. ft; current use: storage; non-friable asbestos and lead base paint present; currently under license to the CCE Central Dispatch Authority

Missouri

Whiteman-Annex No.3
312 Northern Hill Rd.
Warrensburg MO 64093
Landholding Agency: GSA
Property Number: 54201210003
Status: Surplus
GSA Number: 7–D–MO–0694
Comments: 120 sq. ft.; current use: support bldg. for radio tower; previously reported by AF

Montana

Boulder Admin. Site
12 Depot Hill Rd.
Boulder MT 59632
Landholding Agency: GSA
Property Number: 54201130016
Status: Excess
GSA Number: 7–A–MT–532–AA
Comments: 4,799 sq. ft.; recent use: office, repairs are needed

James F. Battin & Courthouse
316 North 26th Street
Billings MT 59101
Landholding Agency: GSA
Property Number: 54201210005
Status: Excess
GSA Number: 7–G–MT–0621–AB
Comments: 116,865 sf.; current use: office; extensive asbestos contamination; needs remediation

Nebraska

Decatur Microwave Repeater
Off County Rd. 31
Decatur NE 68020
Landholding Agency: GSA
Property Number: 54201220001
Status: Surplus
GSA Number: 7–D–NE–0535
Comments: 80 sf. for bldg.; current use (for bldg.): support bldg; 2.41 acres of land; property is fenced w/gate

Nevada

Alan Bible Federal Bldg.
600 S. Las Vegas Blvd.
Las Vegas NV 89101
Landholding Agency: GSA
Property Number: 54201210009
Status: Excess
GSA Number: 9–G–NV–565
Comments: 81,247 sf.; current use: federal bldg.; extensive structural issues; needs major repairs; contact GSA for further details

New Jersey

Camp Petricktown Sup. Facility
US Route 130
Pedricktown NJ 08067
Landholding Agency: GSA
Property Number: 54200740005
Status: Excess
GSA Number: 1–D–NJ–0662
Comments: 21 bldgs. need rehab, most recent use—barracks/mess hall/garages/quarters/admin., may be issues w/right of entry, utilities privately controlled, contaminants

North Carolina

Greenville Site
10000 Cherry Run Rd.
Greenville NC 27834
Landholding Agency: GSA
Property Number: 54201210002
Status: Unutilized
GSA Number: 4–2–NC–0753
Comments: 49,300 sq. ft.; current use: transmitter bldg.; possible PCB contamination; not available-existing Federal need

Ohio

Oxford USAR Facility
6557 Todd Road
Oxford OH 45056
Landholding Agency: GSA
Property Number: 54201010007
Status: Excess
GSA Number: 1–D–OH–833
Comments: Office bldg./mess hall/barracks/simulator bldg./small support bldgs., structures range from good to needing major rehab

Army Reserve Center
5301 Hauserman Rd.
Parma Co: Cuyahoga OH 44130
Landholding Agency: GSA
Property Number: 54201020009
Status: Excess
GSA Number: I–D–OH–842
Comments: 29, 212, and 6,097 sq. ft.; most recent use: office, storage, classroom, and drill hall; water damage on 2nd floor; and wetland property

LTC Dwite Schaffner
U. S. Army Reserve Center
1011 Gorge Blvd.
Akron Co: Summit OH 44310
Landholding Agency: GSA
Property Number: 54201120006
Status: Excess
GSA Number: 1–D–OH–836
Comments: 25,039 sq. ft., most recent use: Office; in good condition

Oregon

3 Bldgs/Land
OTHR–B Radar
Cty Rd 514
Christmas Valley OR 97641
Landholding Agency: GSA
Property Number: 54200840003
Status: Excess
GSA Number: 9–D–OR–0768
Comments: 14000 sq. ft. each/2626 acres, most recent use—radar site, right-of-way

U.S. Customs House
220 NW 8th Ave.
Portland OR
Landholding Agency: GSA
Property Number: 54200840004
Status: Excess
GSA Number: 9–D–OR–0733
Comments: 100,698 sq. ft., historical property/National Register, most recent use—office, needs to be brought up to meet earthquake code and local bldg codes, presence of

Rager Ranger Station House
7615 Rager Rd.
Paulina Co: Crook OR 97751
Landholding Agency: GSA
Property Number: 54201220003
Status: Excess
GSA Number: 9–A–OR–0798
Comments: Off-site removal only; 1,560 sf.; residential; extensive rehabilitation needed; contact GSA for further details

Rhode Island

FDA Davisville Site
113 Bruce Boyer Street
North Kingstown RI 02852
Landholding Agency: GSA
Property Number: 54201130008
Status: Excess
GSA Number: 1–F–RI–0520
Comments: 4,100 sq. ft.; recent use: storage; property currently has no heating (all repairs is the responsibility of owner)

South Carolina

Naval Health Clinic
3600 Rivers Ave.
Charleston SC 29405
Landholding Agency: GSA
Property Number: 54201040013
Status: Excess
GSA Number: 4–N–SC–0606
Comments: Redetermination: 399,836 sq. ft., most recent use: office

South Dakota

Main House
Lady C Ranch Rd.
Hot Springs SD 57747
Landholding Agency: GSA
Property Number: 54201130011
Status: Surplus
GSA Number: 7–A–0523–3–AE
Comments: Off-site removal only; The property is a 2-story structure with 1,024 sq. ft. per floor for a total of 2,048 sq. ft.; structure type: Log Cabin; recent use: residential

Tennessee

NOAA Admin. Bldg.
456 S. Illinois Ave.
Oak Ridge TN 38730
Landholding Agency: GSA
Property Number: 54200920015
Status: Excess
GSA Number: 4–B–TN–0664–AA
Comments: 15,955 sq. ft., most recent use—office/storage/lab

Virginia

Hampton Rds, Shore Patrol Bldg
811 East City Hall Ave
Norfolk VA 23510
Landholding Agency: GSA
Property Number: 54201120009
Status: Excess
GSA Number: 4–N–VA–758
Comments: 9,623 sq. ft.; current use: storage, residential

Washington

Log House

281 Fish Hatchery Rd.
Quilcene WA 98376
Landholding Agency: GSA
Property Number: 54201220006
Status: Excess
GSA Number: 9–I–WA–1260
Comments: Off-site removal only; 3,385 sf.; residential/office former Seattle Branch Bldg.

1015 Second Ave.
Seattle WA 98104
Landholding Agency: GSA
Property Number: 54201220007
Status: Excess
GSA Number: 9–G–WA–1259
Comments: 85,873 sf.; bank; several cracks due to earthquake; possible lead & asbestos; any renovations/new, construction will need approval from State Historic Preservation Off.

Wisconsin

Wausau Army Reserve Ctr.
1300 Sherman St.
Wausau WI 54401
Landholding Agency: GSA
Property Number: 54201210004
Status: Excess
GSA Number: 1–D–WI–610
Comments: Bldg. 12,680 sq. ft.; garage 2,676 sq. ft.; current use: vacant; possible asbestos; remediation may be required; subjected to existing easements; Contact GSA for more

Land

Arizona

Land
95th Ave/Bethany Home Rd
Glendale AZ 85306
Landholding Agency: GSA
Property Number: 54201010014
Status: Surplus
GSA Number: 9–AZ–852
Comments: 0.29 acre, most recent use—irrigation canal 0.30 acre

Bethany Home Road
Glendale AZ 85306
Landholding Agency: GSA
Property Number: 54201030010
Status: Excess
GSA Number: 9–I–AZ–0859
Comments: 10 feet wide access road

California

Parcel F–2 Right of Way
Seal Beach CA 90740
Landholding Agency: GSA
Property Number: 54201030012
Status: Surplus
GSA Number: 9–N–CA–1508–AI
Comments: 6331.62 sq. ft., encroachment

Drill Site #3A
Ford City CA 93268
Landholding Agency: GSA
Property Number: 54201040004
Status: Surplus
GSA Number: 9–B–CA–1673–AG
Comments: 2.07 acres, mineral rights, utility easements

Drill Site #4
Ford City CA 93268
Landholding Agency: GSA
Property Number: 54201040005
Status: Surplus
GSA Number: 9–B–CA–1673–AB
Comments: 2.21 acres, mineral rights, utility easements

Drill Site #6
Ford City CA 93268
Landholding Agency: GSA
Property Number: 54201040006
Status: Surplus
GSA Number: 9–B–CA–1673–AC
Comments: 2.13 acres, mineral rights, utility easements

Drill Site #9
Ford City CA 93268
Landholding Agency: GSA
Property Number: 54201040007
Status: Surplus
GSA Number: 9–B–CA–1673–AH
Comments: 2.07 acres, mineral rights, utility easements

Drill Site #20
Ford City CA 93268
Landholding Agency: GSA
Property Number: 54201040008
Status: Surplus
GSA Number: 9–B–CA–1673–AD
Comments: 2.07 acres, mineral rights, utility easements

Drill Site #22
Ford City CA 93268
Landholding Agency: GSA
Property Number: 54201040009
Status: Surplus
GSA Number: 9–B–CA–1673–AF
Comments: 2.07 acres, mineral rights, utility easements

Drill Site #24
Ford City CA 93268
Landholding Agency: GSA
Property Number: 54201040010
Status: Surplus
GSA Number: 9–B–CA–1673–AE
Comments: 2.06 acres, mineral rights, utility easements

Seal Beach RR Right of Way
West 19th Street
Seal Beach CA 90740
Landholding Agency: GSA
Property Number: 54201140015
Status: Surplus
GSA Number: 9–N–CA–1508–AF
Comments: 8,036.82 sq. ft.; current use: vacant lot

Seal Beach RR Right of Way
East 17th Street
Seal Beach CA 90740
Landholding Agency: GSA
Property Number: 54201140016
Status: Surplus
GSA Number: 9–N–CA–1508–AB
Comments: 9,713.88 sq. ft.; current use: private home

Seal Beach RR Right of Way
East of 16th Street
Seal Beach CA 90740
Landholding Agency: GSA
Property Number: 54201140017
Status: Surplus
GSA Number: 9–N–CA–1508–AG
Comments: 6,834.56 sq. ft.; current use: vacant

Seal Beach RR Right of Way
West of Seal Beach Blvd.
Seal Beach CA 90740
Landholding Agency: GSA
Property Number: 54201140018
Status: Surplus
GSA Number: 9–N–CA–1508–AA
Comments: 10,493.60 sq. ft.; current use: vacant lot

Seal Beach RR Right of Way
Seal Beach
Seal Beach CA 90740
Landholding Agency: GSA
Property Number: 54201210006
Status: Surplus
GSA Number: 9–N–CA–1508–AH
Comments: 4,721.90 sf.; current use: vacant lot between residential bldg.

Seal Beach RR Right of Way
Seal Beach
Seal Beach CA 90740
Landholding Agency: GSA
Property Number: 54201210007
Status: Surplus
GSA Number: 9–N–CA–1508–AJ
Comments: 6,028.70 sf.; current use: vacant lot between residential bldgs.

Illinois

Former Outer Marker Compass
2651 West 83rd Place
Chicago IL
Landholding Agency: GSA
Property Number: 54201220002
Status: Excess
GSA Number: 1–U–I–797
Comments: .22 acres; current use: airport outermaker

Louisiana

Almonaster
4300 Almonaster Ave.
New Orleans LA 70126
Landholding Agency: GSA
Property Number: 54201110014
Status: Surplus
GSA Number: 7–D–LA–0576
Comments: 9.215 acres

Massachusetts

FAA Site
Massasoit Bridge Rd.
Nantucket MA 02554
Landholding Agency: GSA
Property Number: 54200830026
Status: Surplus
GSA Number: MA–0895
Comments: Approx 92 acres, entire parcel within MA Division of Fisheries & Wildlife Natural Heritage & Endangered Species Program

Nevada

RBG Water Project Site
Bureau of Reclamation
Henderson NV 89011
Landholding Agency: GSA
Property Number: 54201140004
Status: Surplus
GSA Number: 9–I–AZ–0562
Comments: Water easement (will not affect conveyance); 22+/− acres; current use: water sludge disposal site; lead from shotgun shells on <1 acre.

North Dakota

Vacant Land of MSR Site
Stanley Mickelsen
Nekoma ND
Landholding Agency: GSA
Property Number: 54201130009
Status: Surplus

GSA Number: 7–D–ND–0499
Comments: 20.2 acres; recent use: unknown

Pennsylvania

Approx. 16.88
271 Sterrettania Rd.
Erie PA 16506
Landholding Agency: GSA
Property Number: 54200820011
Status: Surplus
GSA Number: 4–D–PA–0810
Comments: Vacant land

Marienville Lot
USDA Forest Service
Marienville PA
Landholding Agency: GSA
Property Number: 54201140005
Status: Excess
GSA Number: 4–A–PA–807AD
Comments: 2.42 acres; current use: unknown

South Carolina

Marine Corps Air Station
3481 TRASK Parkway
Beaufort SC 29904
Landholding Agency: GSA
Property Number: 54201140009
Status: Excess
GSA Number: 4–N–SC–0608AA
Comments: 18,987.60 sq. ft. (.44 acres); physical features: swamp, periodic flooding, 5 ft. off

Unsuitable Properties

Building

California

2 Buildings
401 & 405 14th St.
Edwards AFB CA 93524
Landholding Agency: Air Force
Property Number: 18201230002
Status: Unutilized
Directions: 7177, 7179
Reasons: Secured Area
Comments: Public access not allowed; no alternative method to allow public access w/out comprising nat'l security

4259
741 Circle
Edwards AFB CA 93524
Landholding Agency: Air Force
Property Number: 18201230003
Status: Unutilized
Reasons: Secured Area
Comments: Public access not allowed; no alternative method to allow public access w/out comprising nat'l security

Maryland

North Beach Ranger Station
6610 Bayberry Dr.
Berlin MD 21811
Landholding Agency: Interior
Property Number: 61201230002
Status: Excess
Reasons: Floodway
Extensive deterioration
Comments: Documented deficiencies; extensive water damage; orginal structure wash into sea; located in 100 yr. floodplain; massive roof damage due to flooding; unstable foundation; unsound floors; relocation improbable; movement of bldg. will likely result in complete of property

Ohio

Washington County Memorial
U.S. Army Reserve Center
Marietta OH 45750
Landholding Agency: GSA
Property Number: 54201230005
Status: Excess
GSA Number: 1–D–OH–846
Reasons: Within 2000 ft. of flammable or explosive material
Comments: Triad Hunter Co. located within 2,000 ft. of property; company is in the oil and gas exploration business; 300–500 gal above ground tanks on co. grounds contain diesel fuel for their off road vehicles

Tennessee

9 Buildings
Y–12 Nat'l Security Complex
Oak Ridge TN 37831
Landholding Agency: Energy
Property Number: 41201230002
Status: Unutilized
Directions: 9416–24, 9949–04, 9949–29, 9949–35, 9949–49, 9949–89, 9720–12, 9720–18, 9949–47
Reasons: Secured Area
Comments: Public access denied; no alternative method to gain access to allow public access w/out comprising nat'l security

Land

Indiana

Vacant Land
Naval Support Activity
Crane IN 47522
Landholding Agency: Navy
Property Number: 77201230009
Status: Underutilized
Reasons: Secured Area
Comments: Located on restricted military explosive handling & classified electronic development installation; only authorized personnel; no alternative method for public access w/out comprising nat'l security

[FR Doc. 2012–20585 Filed 8–23–12; 8:45 am]

BILLING CODE 4210–67–P

DEPARTMENT OF THE INTERIOR

Office of the Secretary

Proposed Renewal of Information Collection: Alternatives Process in Hydropower Licensing

AGENCY: Office of the Secretary, Office of Environmental Policy and Compliance, Interior.

ACTION: Notice and request for comments.

SUMMARY: In compliance with section 3506(c)(2)(A) of the Paperwork Reduction Act of 1995, the Office of Environmental Policy and Compliance, Office of the Secretary, Department of the Interior is announcing its intention to request renewal approval for the collection of information for Alternatives Process in Hydropower Licensing. This collection request has been forwarded to the Office of Management and Budget (OMB) for review and approval. The information collection request describes the nature of the information collection and the expected burden and cost.

DATES: OMB has up to 60 days to approve or disapprove the information collection request, but may respond after 30 days; therefore, public comments should be submitted to OMB by September 24, 2012, in order to be assured of consideration.

ADDRESSES: Submit comments to the Office of Information and Regulatory Affairs, Office of Management and Budget, Attention: Desk Officer for the Department of Interior (1094–0001), by telefax at (202) 395–5806 or via email to *OIRA_Docket@omb.eop.gov*. Also, please send a copy of your comments to Shawn Alam, Office of Environmental Policy and Compliance, U.S. Department of the Interior, MS 2462–MIB, 1849 C Street NW., Washington, DC 20240, or send an email to *Shawn_Alam@ios.doi.gov*. Additionally, you may telefax them to him at (202) 208–6970. Individuals providing comments should reference Alternatives Process in Hydropower Licensing.

FOR FURTHER INFORMATION CONTACT: To receive a copy of the information collection request, contact Dr. Shawn Alam at (202) 208–5465. You may also contact Dr. Shawn Alam electronically at *Shawn_Alam@ios.doi.gov*. To see a copy of the entire ICR submitted to OMB, go to: *http://www.reginfo.gov* and select Information Collection Review, Currently Under Review.

SUPPLEMENTARY INFORMATION:

I. Abstract

The OMB regulations at 5 CFR part 1320, which implement the Paperwork Reduction Act of 1995, 44 U.S.C. 3501 *et seq.,* require that interested members of the public and affected agencies have an opportunity to comment on information collection and recordkeeping activities (see 5 CFR 1320.8(d)).

On November 14, 2005, the Departments of Agriculture, the Interior, and Commerce published regulations at 7 CFR part 1, 43 CFR part 45, and 50 CFR part 221, to implement section 241 of the Energy Policy Act of 2005 (EPAct), Public Law 109–58, which the President signed into law on August 8, 2005. Section 241 of the EPAct added section 33 to the Federal Power Act (FPA), 16 U.S.C. 823d, that allowed the license applicant or any other party to the license proceeding to propose an alternative to a condition or prescription

that one or more of the Departments develop for inclusion in a hydropower license issued by the Federal Energy Regulatory Commission (FERC) under the FPA. This provision required that the Departments of Agriculture, the Interior, and Commerce to collect the information covered by 1094–0001.

Under FPA section 33, the Secretary of the Department involved must accept the proposed alternative if the Secretary determines, based on substantial evidence provided by a party to the license proceeding or otherwise available to the Secretary, (a) that the alternative condition provides for the adequate protection and utilization of the reservation, or that the alternative prescription will be no less protective than the fishway initially proposed by the Secretary, and (b) that the alternative will either cost significantly less to implement or result in improved operation of the project works for electricity production.

In order to make this determination, the regulations require that all of the following information be collected: (1) A description of the alternative, in an equivalent level of detail to the Department's preliminary condition or prescription; (2) an explanation of how the alternative: (i) If a condition, will provide for the adequate protection and utilization of the reservation; or (ii) if a prescription, will be no less protective than the fishway prescribed by the bureau; (3) an explanation of how the alternative, as compared to the preliminary condition or prescription, will: (i) Cost significantly less to implement; or (ii) result in improved operation of the project works for electricity production; (4) an explanation of how the alternative or revised alternative will affect: (i) Energy supply, distribution, cost, and use; (ii) flood control; (iii) navigation; (iv) water supply; (v) air quality; and (vi) other aspects of environmental quality; and (5) specific citations to any scientific studies, literature, and other documented information relied on to support the proposal.

This notice of proposed renewal of an existing information collection is being published by the Office of Environmental Policy and Compliance, Department of the Interior, on behalf of all three Departments, and the data provided below covers anticipated responses (alternative conditions/prescriptions and associated information) for all three Departments.

II. Data

(1) *Title:* 7 CFR Part 1; 43 CFR Part 45; 50 CFR Part 221; the Alternatives Process in Hydropower Licensing.

OMB Control Number: 1094–0001.

Current Expiration Date: September 30, 2012.

Type of Review: Information Collection Renewal.

Affected Entities: Business or for-profit entities.

Estimated annual number of respondents: 5.

Frequency of responses: Once per alternative proposed.

(2) *Annual reporting and recordkeeping burden:*

Total annual reporting per response: 500 hours.

Total number of estimated responses: 5.

Total annual reporting: 2,500 hours.

(3) *Description of the need and use of the information:* The purpose of this information collection is to provide an opportunity for license parties to propose an alternative condition or prescription to that imposed by the Federal Government in the hydropower licensing process.

As required under 5 CFR 1320.8(d), a **Federal Register** notice soliciting comments on the collection of information was published on May 22, 2012 (77 FR 30308). No comments were received. This notice provides the public with an additional 30 days in which to comment on the proposed information collection activity.

III. Request for Comments

The Departments invite comments on:

(a) Whether the collection of information is necessary for the proper performance of the functions of the agencies, including whether the information will have practical utility;

(b) The accuracy of the agencies' estimate of the burden of the collection and the validity of the methodology and assumptions used;

(c) Ways to enhance the quality, utility, and clarity of the information to be collected; and

(d) Ways to minimize the burden of the collection of information on those who are to respond, including through the use of appropriate automated, electronic, mechanical, or other collection techniques or other forms of information techniques.

''Burden'' means the total time, effort, and financial resources expended by persons to generate, maintain, retain, disclose, or provide information to or for a Federal agency. This includes the time needed to review instructions; to develop, acquire, install, and utilize technology and systems for the purpose of collecting, validating, and verifying information, processing and maintaining information, and disclosing and providing information; to train personnel and to be able to respond to a collection of information, to search data sources, to complete and review the collection of information; and to transmit or otherwise disclose the information.

All written comments, with names and addresses, will be available for public inspection. If you wish us to withhold your personal information, you must prominently state at the beginning of your comment what personal information you want us to withhold. We will honor your request to the extent allowable by law. If you wish to view any comments received, you may do so by scheduling an appointment with the Office of Environmental Policy and Compliance by calling (202) 208–3891. A valid picture identification is required for entry into the Department of the Interior.

An agency may not conduct or sponsor, and a person is not required to respond to, a collection of information unless it displays a currently valid Office of Management and Budget control number.

Dated: August 16, 2012.

Willie R. Taylor,

Director, Office of Environmental Policy and Compliance.

[FR Doc. 2012–20925 Filed 8–23–12; 8:45 am]

BILLING CODE 4310–79–P

DEPARTMENT OF THE INTERIOR

Fish and Wildlife Service

[FWS–R3–R–2012–N122; FXRS1265030000S3–123–FF03R06000]

The Great Lakes Islands National Wildlife Refuges in Michigan and Wisconsin

AGENCY: Fish and Wildlife Service, Interior.

ACTION: Notice of availability; request for comments.

SUMMARY: We, the U.S. Fish and Wildlife Service (Service), announce the availability of a draft comprehensive conservation plan (CCP) and environmental assessment (EA) for the Great Lakes Islands National Wildlife Refuges (NWR) for public review and comment. The group of five national wildlife refuges includes Gravel Island and Green Bay National Wildlife Refuges, Door County, Wisconsin; Harbor Island National Wildlife Refuge, Chippewa County, Michigan; Huron National Wildlife Refuge, Marquette County, Michigan; and Michigan Islands National Wildlife Refuge, Charlevoix, Arenac, and Alpena Counties, Michigan.

In this draft CCP/EA we describe how we propose to manage these refuges for the next 15 years.

DATES: To ensure consideration, we must receive your written comments by September 24, 2012. We will hold open house-style meetings during the comment period to receive comments and provide information on the draft plan. In addition, we will use special mailings, newspaper articles, internet postings, and other media announcements to inform people of opportunities for input.

ADDRESSES: Send your comments or requests for more information by any one of the following methods:

- *Email: r3planning@fws.gov*. Include ''Great Lakes Islands Draft CCP/EA'' in the subject line of the message.
- *Fax:*
  - *Attention:* Refuge Manager, Gravel/Green Bay NWRs, 920–387–2973.
  - *Attention:* Refuge Manager, Huron/Harbor Island/MI Islands (N) NWRs, 906–586–3800.
  - *Attention:* Refuge Manager, Michigan Islands (S) NWR, 989–777–9200.
- *U.S. Mail:*
  - *Attention:* Steve Lenz, Refuge Manager, Gravel Island/Green Bay National Wildlife Refuges (managed by Horicon NWR), W4279 Headquarters Road, Mayville, WI 53050; 920–387–2658.
  - *Attention:* Mark Vaniman, Refuge Manager, Harbor Island/Huron/Michigan Islands National Wildlife Refuges (northern section managed by Seney NWR), 1674 Refuge Entrance Rd., Seney, MI 49883; 906–586–9851.
  - *Attention:* Steve Kahl, Refuge Manager, Michigan Islands National Wildlife Refuge (southern section managed by Shiawassee NWR), 6975 Mower Road, Saginaw, MI 48601; 989–777–5930.
- *In-Person Drop Off:* You may drop off comments during regular business hours at the above addresses.

You will find the draft CCP/EA, as well as information about the planning process and a summary of the CCP, on the planning Web site: *http://www.fws.gov/midwest/planning/GreatLakesIslands/index.html*.

FOR FURTHER INFORMATION CONTACT: Steve Lenz, Gravel Island or Green Bay National Wildlife Refuges, 920–387–2658; Mark Vaniman, Harbor Island, Huron, or the northern section of Michigan Islands National Wildlife Refuges, 906–586–9851; Steve Kahl, southern section of Michigan Islands National Wildlife Refuge, 989–777–5930.

SUPPLEMENTARY INFORMATION:

Introduction

With this notice, we continue the process for developing a comprehensive conservation plan (CCP) for the Great Lakes Islands National Wildlife Refuges. We began this process by publishing a notice of intent in the **Federal Register** (73 FR 76677) on December 17, 2008. For more about the initial process and the history of this refuge, see that notice.

Background

The National Wildlife Refuge System Administration Act of 1966, as amended by the National Wildlife Refuge System Improvement Act of 1997 (16 U.S.C. 668dd–668ee) (Administration Act), requires us to develop a CCP for each national wildlife refuge. The purpose in developing a CCP is to provide refuge managers with a 15-year strategy for achieving refuge purposes and contributing toward the mission of the National Wildlife Refuge System (NWRS), consistent with sound principles of fish and wildlife management, conservation, legal mandates, and Service policies. In addition to outlining broad management direction on conserving wildlife and their habitats, CCPs identify wildlife-dependent recreational opportunities available to the public, including opportunities for hunting, fishing, wildlife observation and photography, and environmental education and interpretation. We will review and update the CCP at least every 15 years in accordance with the Administration Act.

Each unit of the NWRS was established for specific purposes. We use these purposes as the foundation for developing and prioritizing the management goals and objectives for each refuge within the NWRS mission, and to determine how the public can use each refuge. The planning process is a way for us and the public to evaluate management goals and objectives that will ensure the best possible approach to wildlife, plant, and habitat conservation, while providing for wildlife-dependent recreation opportunities that are compatible with each refuge's establishing purposes and the mission of the NWRS.

Additional Information

The draft CCP/EA may be found at *http://www.fws.gov/midwest/planning/GreatLakesIslands/index.html*. That document incorporates an EA, prepared in accordance with the National Environmental Policy Act (NEPA) (43 U.S.C. 4321 *et seq.*). The draft CCP/EA includes detailed information about the planning process, refuge, issues, and management alternatives considered and proposed. The EA includes discussions of three alternative refuge management options. The Service's preferred alternative is reflected in the draft CCP.

The alternatives analyzed in detail include:

- *Alternative A:* Current Direction To Maintain Natural Integrity—The current management direction of the Great Lakes Islands NWRs would be maintained under this alternative. For NEPA purposes, this is referred to as the ''No Action'' alternative.
- *Alternative B:* Minimal Management To Preserve Wilderness Qualities—Management actions would be focused to retain the wilderness character of each island to the extent practical. Public access and visitor services would be kept to a minimal level in order to reduce visual and habitat impacts.
- *Alternative C (Preferred Alternative):* Enhanced Management To Promote Natural Integrity and Public Stewardship—This option would provide for the growth of the island refuges and more opportunities for compatible recreational use.

Public Involvement

We will give the public an opportunity to provide input at a public meeting. You can obtain the schedule from the address or web site listed in this notice (see **ADDRESSES**). You may also submit comments anytime during the comment period.

Public Availability of Comments

Before including your address, phone number, email address, or other personal identifying information in your comment, you should be aware that your entire comment—including your personal identifying information—may be made publicly available at any time. While you can ask us in your comment to withhold your personal identifying information from public review, we cannot guarantee that we will be able to do so.

Richard D. Schultz,

Acting Regional Director, Midwest Region, U.S. Fish and Wildlife Service.

[FR Doc. 2012–20847 Filed 8–23–12; 8:45 am]

BILLING CODE 4310–55–P

DEPARTMENT OF THE INTERIOR

Fish and Wildlife Service

[FWS–R5–ES–2012–0059; 50120–1112–0000–F2]

Draft Environmental Impact Statement and Habitat Conservation Plan; Receipt of Application for Incidental Take Permit; Beech Ridge Energy

AGENCY: Fish and Wildlife Service, Interior.

ACTION: Notice of availability, receipt of application.

SUMMARY: Pursuant to the Endangered Species Act (ESA) and the National Environmental Policy Act (NEPA), we, the U.S. Fish and Wildlife Service (Service), announce the availability of an application for an Incidental Take Permit (ITP) and the associated Habitat Conservation Plan (HCP) from Beech Ridge Energy, LLC, as well as the Service's draft Environmental Impact Statement (EIS), for public review and comment.

We provide this notice to (1) seek public comments on the proposed HCP; (2) seek public comments on the draft EIS; and (3) advise other Federal and State agencies, affected Tribes, and the public of our intent to prepare a final EIS.

DATES: We will accept comments received or postmarked on or before October 23, 2012. Comments submitted electronically using the Federal eRulemaking Portal (see **ADDRESSES**) must be received by 11:59 p.m. Eastern Time on the closing date.

We will consider all requests for public meetings. To accommodate scheduling of meetings and allow sufficient time to publicize them, you must contact Laura Hill no later than September 14, 2012 (see **FOR FURTHER INFORMATION CONTACT**).

ADDRESSES:

Document availability: You may obtain copies of the documents on the Internet at *http://www.regulations.gov* at Docket Number FWS–R5–ES–2012–0059, or by any of the methods described in Availability of Documents (under **SUPPLEMENTARY INFORMATION**).

Comment submission: You may submit written comments by one of the following methods:

- *Electronically:* Go to the Federal eRulemaking Portal: *http://www.regulations.gov*. In the Search box, enter FWS–R5–ES–2012–0059, which is the docket number for this notice. Click on the appropriate link to locate this document and submit a comment.
- *By hard copy:* Submit by U.S. mail or hand-delivery to: Public Comments Processing, Attn: FWS–R5–ES–2012–0059; Division of Policy and Directives Management; U.S. Fish and Wildlife Service; 4401 N. Fairfax Drive, MS 2042–PDM; Arlington, VA 22203.

We request that you send comments by only the methods described above. We will post all information received on *http://www.regulations.gov*. This generally means that we will post any personal information you provide us (see the Public Comments section below for more information).

FOR FURTHER INFORMATION CONTACT: Ms. Laura Hill, Assistant Field Supervisor, West Virginia Field Office, 694 Beverly Pike, Elkins, WV 26241; telephone 304–636–6586, ext. 18.

SUPPLEMENTARY INFORMATION: We received an application from Beech Ridge Energy for an ITP for the operation, and maintenance of 67 existing turbines in the project area; the construction, operation and maintenance of up to 33 additional turbines and associated infrastructure in the project area; the implementation of the HCP during the life of the permit; and the decomissioning of the entire 100-turbine project and associated infrastructure at the end of its operational life. If approved, the permit would be for a 25-year period and would authorize incidental take of the endangered Indiana bat (*Myotis sodalis*) and Virginia big-eared bat (*Corynorhinus townsendii virginianus*) (covered species). A conservation program to minimize and mitigate for the impacts of the incidental take would be implemented by Beech Ridge Energy as described in the proposed Beech Ridge Wind Energy Project HCP. To comply with the NEPA (42 U.S.C. 4321 et seq.), we prepared a draft EIS that describes the proposed action and possible alternatives and analyzes the effects of alternatives on the human environment.

Availability of Documents

The proposed HCP and draft EIS are available on the West Virginia Field Office's Web site at: *http://www.fws.gov/westvirginiafieldoffice/beech_ridge_wind_power.html* or at *http://www.regulations.gov* under Docket Number FWS–R5–ES–2012–0059. Copies of the proposed HCP and draft EIS will also be available for public review during regular business hours at the West Virginia Field Office, 694 Beverly Pike, Elkins, WV 26241.

Paper copies of the proposed HCP and draft EIS may also be viewed at the following public libraries: (1) Greenbrier County Public Library, 152 Robert W. McCormick Drive, Lewisburg, WV; (2) Kanawha County Public Library, 123 Capitol Street, Charleston, WV; and (3) Rupert Public Library, 602 Nicholas Street, Rupert, WV. Those who do not have access to the Internet or cannot visit our office or local libraries can request CD–ROM copies of the documents by telephone at 304–636–6586 or by letter to the West Virginia Field Office (see the address under **FOR FURTHER INFORMATION CONTACT**).

Background

Section 9 of the ESA (16 U.S.C. 1531 *et seq.*) and its implementing regulations prohibit the ''take'' of animal species listed as endangered or threatened. Take is defined under the ESA as to ''harass, harm, pursue, hunt, shoot, wound, kill, trap, capture, or collect listed animal species, or to attempt to engage in such conduct'' (16 U.S.C. 1538). However, under section 10(a) of the ESA, we may issue permits to authorize incidental take of listed species. ''Incidental take'' is defined by the ESA as take that is incidental to, and not the purpose of, carrying out an otherwise lawful activity. Regulations governing incidental take permits for threatened and endangered species, respectively, are found in the Code of Federal Regulations (50 CFR 17.22; 50 CFR 17.32).

Beech Ridge Energy has been working with staff from the West Virginia Field Office since a January 2010 consent decree was signed, following a court order ruling that construction and operation of the project would violate section 9 of the ESA ''unless and until [Beech Ridge Energy] obtains an ITP'' for the Indiana bat. Beech Ridge Energy is now seeking a permit for the incidental take of the Covered Species for a term of 25 years. Incidental take of these bat species may occur due to injury and mortality from collision with turbine blades and towers and from barotrauma (sudden changes in air pressure near the tips of spinning blades that cause decompression of the bats' lungs). Adverse effects to suitable Indiana bat habitat may occur from forest clearing and fragmentation.

The proposed HCP was developed to address operation of 67 existing turbines, construction and operation of an additional 33 turbines, and decommissioning of all 100 turbines by the end of the permit term (covered activities). The 6,860-acre (2,744-hectare) project planning area in Greenbrier and Nicholas Counties, West Virginia, is located on private land managed primarily for timber production.

The HCP's proposed conservation strategy is designed to avoid, minimize,

and mitigate the impacts of covered activities on the covered species. The biological goals and objectives are to (1) significantly minimize mortality of all bat species consistent with the best available scientific information; (2) avoid and minimize take of covered species by implementing turbine operational protocols learned through a research and adaptive management strategy; and (3) mitigate unavoidable impacts to covered species by implementing habitat protection or restoration measures in key habitats for both species.

The HCP that Beech Ridge Energy included with its application for an ITP includes a series of conservation measures to avoid, minimize, mitigate, and monitor the effects of project construction and operation on the covered species. These measures include: (1) Constructing fewer turbines; (2) relocating turbines greater distances from bat hibernacula; (3) reducing risk to bats when they are active at low wind speeds by raising turbine cut-in speeds (the wind speed at which turbines begin generating electricity) during bat fall migration; (4) further reducing risk to bats by fully feathering turbine blades so that they barely move at wind speeds below the cut-in speed; (5) implementing turbine feathering and cut-in speed research to determine effectiveness of the changes in operational protocols; (6) monitoring bat mortality for the life of the project to ensure that biological goals are being met and that take limits are not exceeded; and (7) implementing off-site conservation projects designed to benefit the covered species by protecting and managing key habitats in perpetuity.

The proposed action consists of the issuance of an ITP and implementation of the proposed HCP. Beech Ridge Energy considered four alternatives to the proposed action in its HCP: No action (no ITP); alternate project locations; alternate technologies (such as coal and natural gas) to generate electricity; and reduced conservation measures.

Beech Ridge Energy has developed an implementation agreement (IA) that ensures proper implementation of each of the terms and conditions of the HCP and describes the applicable remedies and recourse should any party fail to perform its obligations, responsibilities, and tasks, as set forth in the agreement. The IA is being included as an appendix to the proposed HCP for public review.

National Environmental Policy Act

We formally initiated an environmental review of the project through publication of a notice of intent to prepare an EIS in the **Federal Register** on July 22, 2010 (75 FR 42767). That notice also announced a public scoping period, during which we invited interested parties to provide written comments expressing their issues or concerns related to the proposal and to attend a public scoping meeting held in Rupert, West Virginia.

Based on public scoping comments, we have prepared a draft EIS for the proposed action and have made it available for public inspection (see **ADDRESSES**). NEPA requires that a range of reasonable alternatives to the proposed action be described. The draft EIS analyzes four alternatives, which were derived in response to scoping comments on alternatives and from discussions with Beech Ridge Energy during the development of the HCP. The alternatives are as follows:

Alternative 1: No action; do not issue a permit; status quo;

Alternative 2: The proposed Federal action of issuance of the associated ITP and implementation of the proposed HCP for 100 turbines and two covered species;

Alternative 3: Issuance of an ITP and implementation of an HCP for 100 turbines and 5 covered species; and

Alternative 4: Issuance of an ITP and implementation of an HCP for 67 turbines and 2 covered species.

We are seeking public input on the draft EIS to determine whether we reviewed an appropriate list of reasonable alternatives, whether there are additional alternatives that we should consider, there is additional information that could better inform the EIS, and whether we appropriately anticipated the environmental effects of the various alternatives.

Public Meetings

We will consider all requests for public meetings. To accommodate scheduling of meetings and allow sufficient time to publicize them, all requests for meetings must be received within 21 days after publication of this notice (see **DATES**, **ADDRESSES**, and **FOR FURTHER INFORMATION CONTACT**). Please indicate the reasons why a meeting is desired (desired outcomes), desired format of the meeting, who is requesting the meeting (an individual, group, or groups) and desired meeting location(s).

Next Steps

We will evaluate the permit application, associated documents, and public comments in reaching a final decision on whether the application meets the requirements of section 10(a) of the ESA (16 U.S.C. 1531 *et seq.*). The HCP and EIS may change in response to public comments. We will prepare responses to public comments and publish a notice of availability of the final HCP and final EIS. We also will evaluate whether issuance of a section 10(a)(1)(B) permit would comply with section 7 of the ESA by conducting an intra-Service section 7 consultation. We will use the results of this consultation, in combination with the above findings, in our final analysis to determine whether to issue a permit. If the requirements are met, we will issue the permit to the applicant. We will issue a record of decision and issue or deny the permit no sooner than 30 days after publication of the notice of availability of the final EIS.

Public Comments

The Service invites the public to comment on the proposed HCP and draft EIS during a 60-day public comment period (see **DATES**). You may submit comments by one of the methods shown under **ADDRESSES**.

Public Availability of Comments

We will post all public comments and information received electronically or via hardcopy on *http://regulations.gov*. All comments received, including names and addresses, will become part of the administrative record and will be available to the public. Before including your address, phone number, email address, or other personal identifying information in your comment, you should be aware that your entire comment—including your personal identifying information—will be publicly available. If you submit a hardcopy comment that includes personal identifying information, you may request at the top of your document that we withhold this information from public review. However, we cannot guarantee that we will be able to do so.

Authority

This notice is provided pursuant to section 10(c) of the ESA (16 U.S.C. 1531 *et seq.*) and NEPA regulations (40 CFR 1506.6).

Dated: July 30, 2012.

Spencer Simon,

Acting Assistant Regional Director, Northeast Region.

[FR Doc. 2012–20223 Filed 8–23–12; 8:45 am]

BILLING CODE 4310–55–P

DEPARTMENT OF THE INTERIOR

Fish and Wildlife Service

[FWS–R1–R–2012–N123: 1265–0000–10137–S3]

Sheldon National Wildlife Refuge, Humboldt County and Washoe County, NV; Lake County, OR; Final Comprehensive Conservation Plan and Environmental Impact Statement

AGENCY: Fish and Wildlife Service, Interior.

ACTION: Notice of availability.

SUMMARY: We, the U.S. Fish and Wildlife Service (Service), announce the availability of the final comprehensive conservation plan and environmental impact statement (CCP/EIS) for Sheldon National Wildlife Refuge (Refuge). In the final CCP/EIS, we describe how we propose to manage the Refuge for the next 15 years.

DATES: We will sign a record of decision no sooner than 30 days after publication of this notice.

ADDRESSES: You may view, obtain, or request printed or CD–ROM copies of the Final CCP/EIS by any of the following methods.

Agency Web Site: Download the final CCP/EIS at *www.fws.gov/pacific/planning/main/docs/NV/docssheldon.htm*.

Mail: Sheldon National Wildlife Refuge, P.O. Box 111, Lakeview, OR 97630.

In-Person Viewing or Pickup: Sheldon National Wildlife Refuge, 20995 Rabbit Hill Road, Lakeview, OR 97630.

FOR FURTHER INFORMATION CONTACT: Aaron Collins, Planning Team Leader, (541) 947–3315 ext. 223 (phone).

SUPPLEMENTARY INFORMATION:

Introduction

With this notice, we announce the availability of the Refuge's final CCP/EIS. We started this process through a notice in the **Federal Register** (73 FR 27003; May 12, 2008). We released the draft CCP/EIS to the public, announcing and requesting public comments in a notice of availability in the **Federal Register** (76 FR 55937; September 9, 2011).

The Refuge encompasses approximately 575,000 acres, located primarily in northwestern Nevada, with a small area in south-central Oregon. The Refuge was established to protect the American pronghorn; it also provides important habitat for greater sage-grouse, pygmy rabbit, American pika, mule deer, California bighorn sheep, Sheldon tui chub, various raptors, and numerous passerines and invertebrates. Habitat types found on the Refuge are primarily shrub-steppe uplands, and springs and spring brooks, basalt cliffs and canyons, and emergent marshes; juniper, mountain mahogany, and aspen woodlands; and desert greasewood flats.

We announce the availability of the final CCP/EIS in accordance with National Environmental Policy Act (NEPA) 40 CFR 1506.6(b), requirements. We completed a thorough analysis of impacts on the human environment in the final CCP/EIS.

The CCP will guide us in managing and administering the Refuge for the next 15 years. Alternative 2, as we described in the Final CCP/EIS, is our preferred alternative.

Background

The CCP Process

The National Wildlife Refuge System Administration Act of 1966, 16 U.S.C. 668dd–668ee (Refuge Administration Act), as amended by the National Wildlife Refuge System Improvement Act of 1997, requires us to develop a CCP for each national wildlife refuge. The purpose for developing a CCP is to provide refuge managers with a 15-year plan for achieving refuge purposes and contributing toward the mission of the National Wildlife Refuge System, consistent with sound principles of fish and wildlife management, conservation, legal mandates, and our policies. In addition to outlining broad management direction on conserving wildlife and their habitats, CCPs identify wildlife-dependent recreational opportunities available to the public, including opportunities for hunting, fishing, wildlife observation and photography, and environmental education and interpretation. We will review and update the CCP at least every 15 years in accordance with the Refuge Administration Act.

CCP Alternatives We Are Considering

We evaluated three alternatives for managing the Refuge for the next 15 years in the Final CCP/EIS. Based on our analysis, we identified Alternative 2 as our preferred alternative; it was modified in the Final CCP/EIS to address the comments we received on the Draft CCP/EIS. We summarized the comments and our responses in Appendix N of the Final CCP/EIS. Summaries of our alternatives follow.

Alternative 1 Current Management (No Action Alternative)

Alternative 1 reflects current management of the Refuge and serves as the baseline for comparing the other management alternatives. Under Alternative 1 our management focus would be on maintaining habitats throughout the Refuge in their current conditions and preventing further degradation. We would continue to roundup and adopt out feral horses and burros, to maintain a population of approximately 800 horses and 80 burros. Wildland fire suppression, and mechanical cutting and thinning of encroaching juniper, would continue, to maintain sagebrush habitats in the late stages of succession, and avoid potential widespread growth of invasive annual grasses. We would continue to use prescribed fire to maintain wet meadow and grassland habitats in their early-to-mid-stages of succession. Public uses such as wildlife observation, photography, hunting, and fishing would continue on existing ponds, reservoirs, fishing docks, primary roads, and various primitive, semi-primitive, and developed campgrounds. Fish stocking in Refuge reservoirs would continue, as would the limited collection of rocks and minerals. The existing wilderness proposal would not change.

Alternative 2 Intensive Habitat Management (Preferred Alternative)

Under Alternative 2, our preferred alternative, we would focus on improving habitat for fish and wildlife, with an emphasis on supporting healthy populations of sagebrush-obligate wildlife species such as American pronghorn and greater sage-grouse. Actions to improve the Refuge's habitats would include removing all feral horses and burros from the Refuge within 5 years, relocating campgrounds away from sensitive riparian habitats, reducing western juniper encroachment, and, where feasible, increasing the frequency of fire to restore more natural habitat conditions, diversity, and plant community succession. Removing abandoned livestock developments and reducing invasive plants along roads would be emphasized. Opportunities for hunting, fishing, wildlife observation, photography, and environmental education and interpretation would be maintained or improved. Limited rock and mineral collecting would continue, with improved visitor information. Nevada's fish stocking program would continue, using fish species naturally occurring within the local area. Our wilderness recommendation would differ from the existing proposal by including some but not all of the lands identified in the existing proposal, and recommending areas not previously identified. Contingent upon approval of

the wilderness recommendation, we would propose reopening some primitive routes for motorized vehicle use. Several segments of existing and recommended routes would be realigned to reduce erosion and impacts to riparian habitats. Alternative 2 would result in the greatest improvements to native habitat conditions throughout the Refuge, would best meet the policy and directives of the Service, is compatible with the Refuge's purposes, and would maintain balance among the Refuge's varied management needs and programs.

Alternative 3 Less Intensive Management

Under Alternative 3, we would restore natural processes, to maintain, enhance, and where possible, increase the Refuge's native fish, wildlife, and plant diversity, representative of historical conditions in the Great Basin. Emphasis would be placed on improving shrub-steppe habitats, and restoring modified and/or degraded habitats to more natural conditions, while using less intensive management actions where appropriate. Habitat management actions would include removing all feral horses and burros from the Refuge within 10 years, and creating conditions where natural processes, such as fire, could be allowed, with less dependence on intensive management actions. Opportunities for wildlife observation, photography, hunting, and fishing would continue at most current sites, except that fish stocking at Big Spring Reservoir would not occur. Campgrounds would be consolidated into fewer but larger developed campgrounds, with better amenities. We would recommend a smaller number of acres for wilderness designation under Alternative 3. As part of our wilderness proposal, we would recommend reopening some primitive routes for motorized vehicle use, which would not require intensive restoration or management to minimize adverse impacts.

Comments

We solicited comments on the Draft CCP/EIS in a **Federal Register** notice (76 FR 55937; September 9, 2011). We received comments from 1,709 agencies, organizations, and individuals. We addressed the comments in the Final CCP/EIS by making minor changes and clarifications as appropriate. These changes are explained in our responses to public comments in Appendix N of the Final CCP/EIS.

Dated: June 21, 2012.

Richard R. Hannan,

Acting Regional Director, Pacific Region, Portland, Oregon.

[FR Doc. 2012–20843 Filed 8–23–12; 8:45 am]

BILLING CODE 4310–55–P

DEPARTMENT OF THE INTERIOR

Geological Survey

[GX12GC009PLSG00]

Agency Information Collection Activity; National Cooperative Geologic Mapping Program (EDMAP and STATEMAP)

AGENCY: United States Geological Survey (USGS), Interior.

ACTION: Notice of an extension of a currently approved collection (1028–0088).

SUMMARY: To comply with the Paperwork Reduction Act of 1995 (PRA), we are notifying the public that we have submitted to the Office of Management and Budget (OMB) a request for an extension of a currently approved information collection (IC) for the National Cooperative Geologic Mapping Program (NCGMP). The NCGMP has two components: Educational (EDMAP) and State (STATEMAP). This notice provides the public an opportunity to comment on the paperwork burden of this collection which is scheduled to expire on August 31, 2012.

DATES: You must submit comments on or before September 24, 2012.

ADDRESSES: Please submit comments on this information collection directly to the Office of Management and Budget, Office of Information and Regulatory Affairs, Attention: Desk Officer for the Department of the Interior, via email (*OIRA_DOCKET@omb.eop.gov*) or fax (202) 395–5806; and identify your submission as 1028–0088.

Please also submit a copy of your comments to the USGS Information Collection Clearance Officer, U.S. Geological Survey, 12201 Sunrise Valley Drive, MS 807, Reston, VA 20192 (mail); 703–648–7199 (fax); or *smbaloch@usgs.gov* (email). Please reference Information Collection 1028–0088 in the subject line.

FOR FURTHER INFORMATION CONTACT: Douglas A. Howard, Associate Program Coordinator NCGMP (STATEMAP and EDMAP), USGS Geological Survey, 12201 Sunrise Valley Drive, MS 908, 20192 (mail); at 703–648–6978 (telephone); or *dahoward@usgs.gov* (email). You may also find details on this information collection request at *www.reginfo.gov.*

SUPPLEMENTARY INFORMATION:

Title: National Cooperative Geologic Mapping Program (EDMAP and STATEMAP).

OMB Control Number: 1028–0088.

Abstract: EDMAP is the educational component of the NCGMP that is intended to train the next generation of geologic mappers. The primary objective of the STATEMAP component of the NCGMP is to establish the geologic framework of areas that are vital to the welfare of individual States.

The NCGMP EDMAP program allocates funds to colleges and universities in the United States and Puerto Rico through an annual competitive cooperative agreement process. Every federal dollar that is awarded is matched with university funds.

Geology professors who are skilled in geologic mapping request EDMAP funding to support undergraduate and graduate students at their college or university in a one-year mentored geologic mapping project that focuses on a specific geographic area.

Only State Geological Surveys are eligible to apply to the STATEMAP component of the National Cooperative Geologic Mapping Program pursuant to the National Geologic Mapping Act (Pub. L. 106–148). Since many State Geological Surveys are organized under a State university system, such universities may submit a proposal on behalf of the State Geological Survey.

Each fall, the program announcements are posted to the Grants.gov Web site and respondents are required to submit applications (comprising of Standard Form 424, 424A, 424B, Proposal Summary Sheet, the Proposal, and Budget Sheets. Additionally, EDMAP proposal must include a Negotiated Rate Agreement, and a Support letter from a State Geologist or USGS Project Chief).

Since 1996, more than $5 million from the NCGMP has supported geologic mapping efforts of more than 1,000 students working with more than 244 professors at 148 universities in 44 states, the District of Columbia, and Puerto Rico. Funds for graduate projects are limited to $17,500 and undergraduate project funds limited to $10,000. These funds are used to cover field expenses and student salaries, but not faculty salaries or tuition. The authority for both programs is listed in the National Geologic Mapping Act (Pub. L. 106–148).

Frequency of Collection: Annually.

Respondent's Obligation: Voluntary (necessary to receive funding).

Estimated Number and Description of Respondents: Approximately 50 University or College faculty annually and approximately 45 State Geological Surveys.

Annual Burden Hours: 5,220 hours.

Estimated Annual Reporting and Recordkeeping ''Hour'' Burden: We expect to receive approximately 50 applications for EDMAP and 45 applications for STATEMAP each year which takes each applicant approximately 36 hours to complete, totaling 3,420 hours. This includes the time for project conception and development, proposal writing and reviewing, and submitting a project narrative through Grants.gov. We expect to issue 45 EDMAP and 45 STATEMAP grants per year. The grant recipients are also required to submit a final technical report which takes each grant recipient approximately 20 hours to complete, totaling 1,800 hours.

Estimated Annual Reporting and Recordkeeping ''Non-Hour Cost'': We have not identified any ''non-hour cost'' burdens associated with this collection of information.

Public Disclosure Statement: The PRA (44 U.S.C. 3501, *et seq.*) provides that an agency may not conduct or sponsor and you are not required to respond to, a collection of information unless it displays a currently valid OMB control number.

Comments: To comply with the public consultation process, on February 27, 2012, we published a **Federal Register** notice (77 FR 11565) announcing our intent to submit this information collection to OMB for approval. In that notice we solicited public comments for 60 days, ending on April 27, 2012. The USGS received one comment. The comment was a general invective about the Federal government. It did not address, and was not germane to, this information collection. Therefore, we have not changed the collection in response to the comment.

We again invite comments concerning this IC on: (a) Whether the proposed collection of information is necessary for the agency to perform its duties, including whether the information is useful; (b) the accuracy of the agency's estimate of the burden of the proposed collection of information; (c) ways to enhance the quality, usefulness, and clarity of the information to be collected; and (d) ways to minimize the burden on the respondents, including the use of automated collection techniques or other forms of information technology. Please note that any comments submitted in response to this notice are a matter of public record. Before including your address, phone number, email address or other personal identifying information in your comment, you should be aware that your entire comment including your personal identifying information, may be made publically available at any time. While you can ask OMB in your comment to withhold your personal identifying information from public review, we cannot guarantee that will be done.

Dated: August 20, 2012.

Douglas A. Howard,

Associate Program Coordinator, National Cooperative Geologic Mapping Program.

[FR Doc. 2012–20878 Filed 8–23–12; 8:45 am]

BILLING CODE 4311–AM–P

DEPARTMENT OF THE INTERIOR

Bureau of Indian Affairs

Notice of Intent To Prepare an Environmental Impact Statement for the Proposed Pokagon Band Tribal Village Fee-to-Trust Acquisition and Casino Project in the City of South Bend, St. Joseph County, IN

AGENCY: Bureau of Indian Affairs, Interior.

ACTION: Notice.

SUMMARY: This notice advises the public that the Bureau of Indian Affairs (BIA), in cooperation with the Pokagon Band of Potawatomi Indians (Tribe), intends to gather the information necessary for preparing an Environmental Impact Statement (EIS) for the conveyance into trust of 164.22 acres of land currently held by the Tribe in the City of South Bend, Indiana. The purpose of the proposed action is to help create a tribal land base and to meet the Tribe's economic development needs in Indiana. The Tribe is federally recognized, but does not currently have a federally protected reservation or have land that is held in trust for the Tribe by the United States in the State of Indiana.

This notice also announces a public scoping meeting to identify potential issues, alternatives, and content for inclusion in the EIS.

DATES: The public scoping meeting will be held on September 27, 2012, and will begin at 6 p.m. and last until the last public comment is received. Written comments on the scope of the EIS or implementation of the proposal must arrive by October 9, 2012.

ADDRESSES: The public scoping meeting will be held at the South Bend Century Center, 120 South Saint Joseph Street, South Bend, Indiana 46601. The meeting will be co-hosted by the BIA and the Tribe. You may mail, hand deliver, or telefax written comments to Diane Rosen, Regional Director, Midwest Regional Office, Bureau of Indian Affairs, 5600 West American Boulevard, Suite 500, Bloomington, MN 55437; Telefax (612) 713–4401. Please include your name, return address and the caption specifying ''Scoping Comments for Proposed Pokagon Band Tribal Village'' on the first page of your written comments.

FOR FURTHER INFORMATION CONTACT: Scott Doig, Regional Environmental Protection Specialist, Midwest Regional Office, Bureau of Indian Affairs, 5600 West American Boulevard, Suite 500, Bloomington, MN 55437; telephone: (612) 725–4514; email: *scott.doig@bia.gov.*

SUPPLEMENTARY INFORMATION: The Tribe proposes to take into trust 164.22 acres of land located within the municipal limits of the City of South Bend, Indiana pursuant to Section 6 of the Pokagon Restoration Act (25 U.S.C. 1300j–5). The proposed trust acquisition of the property is for the development of a Tribal Village, which will include 44 housing units, a multi-purpose facility, health service and other tribal government facilities. Proposed development for the property also includes a Class III gaming facility with a hotel, restaurants, meeting space, and a parking garage.

The property is located approximately 5.25 miles from Interstate 80/90 and approximately 2.5 miles southwest of downtown South Bend and consists of 17 contiguous parcels of land that are bounded on the northwest by Indiana State Road 23, on the southwest by U.S. Highway 31/20, and on the east by Locust Street. The site of the gaming facility is proposed to be accessible from Indiana State Road 23 and the Tribal Village is proposed to be accessible from Locust Road.

The purpose of the proposed action is to improve access to essential tribal government services, provide housing, economic development, and employment opportunities for the Pokagon Band tribal community residing in northern Indiana. Areas of environmental concern so far identified that the EIS will address include soils and geology, air quality, water supply, wastewater and storm water, biological resources, traffic and transportation, cultural and historic resources, socioeconomics, public health and safety, noise, and visual resources/aesthetics. Alternatives identified for analysis include the proposed action, a no-action alternative, a non-gaming alternative, and an alternate gaming site

alternative. The range of issues addressed in the EIS may also be revised based on comments received at the public scoping meeting and in response to this notice. The Tribe consists of approximately 4,400 members and is governed by a Tribal Council under a constitution. The United States presently holds approximately 2,883 acres of land in the lower peninsula of the State of Michigan in trust for the Tribe.

Public Comment Availability

Comments, including names and addresses of respondents, will be available for public review at all of the mailing addresses shown in the **ADDRESSES** section (except those for the public meetings) during business hours, 8 a.m. to 4:30 p.m., Monday through Friday, except holidays. Before including your address, phone number, email address, or other personal identifying information in your comment, you should be aware that your entire comment—including your personal identifying information—may be made publicly available at any time. While you can request your comment to exclude personal identifying information from public review, BIA cannot guarantee our ability to do so under the guidelines of the Freedom of Information Act.

Authority

This notice is published in accordance with section 1503.1 of the Council of Environmental Quality regulations (40 CFR parts 1500 through 1508) and Sec. 46.305 of the Department of Interior Regulations (43 CFR part 46) implementing the procedural requirements of the National Environmental Policy Act of 1969, as amended (42 U.S.C. 4321 *et seq.*), the Department of the Interior Manual (516 DM 1–6), and is in the exercise of authority delegated to the Assistant Secretary—Indian Affairs by 209 DM 8.

Dated: August 9, 2012.

Donald E. Laverdure,

Acting Assistant Secretary—Indian Affairs.

[FR Doc. 2012–20833 Filed 8–23–12; 8:45 am]

BILLING CODE 4310–W7–P

DEPARTMENT OF THE INTERIOR

Bureau of Land Management

[LLUTC010000–L51010000–ER0000–LVRWJ10J4080; UTU–044897]

Notice of Intent To Prepare an Environmental Assessment for the Proposed Cameron to Milford—138 kV Transmission Line Project and Possible Amendment to the Cedar Beaver Garfield Antimony Resource Management Plan for the Cedar City Field Office, Cedar City, UT

AGENCY: Bureau of Land Management, Interior.

ACTION: Notice of Intent.

SUMMARY: In compliance with the National Environmental Policy Act of 1969, as amended (NEPA), and the Federal Land Policy and Management Act of 1976, as amended (FLPMA), the Bureau of Land Management (BLM) Cedar City Field Office, Cedar City, Utah, intends to prepare an Environmental Assessment (EA) and possible Resource Management Plan (RMP) amendment and by this notice is announcing the beginning of the scoping process to solicit public comments and identify issues.

DATES: This notice initiates the public scoping process for the EA and possible RMP amendment. Comments on issues may be submitted in writing until September 24, 2012. The date(s) and location(s) of any scoping meetings will be announced at least 15 days in advance through local media, newspapers and the BLM Web site at: *https://www.ut.blm.gov/enbb/index.php*. In order to be included in the EA, all comments must be received prior to the close of the scoping period or 15 days after the last public meeting, whichever is later.

ADDRESSES: You may submit comments related to the Cameron to Milford—138 kV Transmission Line Project by any of the following methods:

- *Web site: https://www.ut.blm.gov/enbb/index.php.*
- *Email: kkunze@blm.gov.*
- *Fax:* 435–865–3058.
- *Mail:* Bureau of Land Management, Cedar City Field Office, 176 East DL Sargent Drive, Cedar City, Utah 84721, ATTN: Karen McAdams-Kunze.

Documents pertinent to this proposal may be examined at the Cedar City Field Office.

FOR FURTHER INFORMATION CONTACT: For further information and/or to have your name added to our mailing list, contact Karen McAdams-Kunze, telephone 435–865–3073; Bureau of Land Management, Cedar City Field Office, 176 East DL Sargent Drive, Cedar City, Utah; email *kkunze@blm.gov*. Persons who use a telecommunications device for the deaf (TDD) may call the Federal Information Relay Service (FIRS) at 1–800–877–8339 to contact the above individual during normal business hours. The FIRS is available 24 hours a day, 7 days a week, to leave a message or question with the above individual. You will receive a reply during normal business hours.

SUPPLEMENTARY INFORMATION: The applicant PacifiCorp, doing business as Rocky Mountain Power, has requested a right-of-way (ROW) authorization to construct, operate, maintain, and decommission a 138 kV single-circuit overhead transmission line on Federal lands. The project would provide an additional 27 megawatts of reliable electrical capacity by 2014 to resolve current system constraints and respond to anticipated load growth in western Beaver County, Utah. The proposed project would begin at the existing Cameron Substation near Beaver, Utah, and terminate at the existing Milford Substation near the town of Milford, Utah. The project area would span approximately 19 miles, about 12 of which would be on BLM-administered lands, depending on the route selected. Rocky Mountain Power has identified alternative routes between the two substations. These routes would affect Federal, State, and private lands. The requested ROW width on Federal lands is 60 feet except for a portion of one alternative route. The requested width for that portion is 100 feet where it passes over steep terrain. Rocky Mountain Power proposes to use predominately single wood pole structures, approximately 55 to 90 feet in height with average spans between poles of 350 to 500 feet. No new permanent roads would be constructed. Temporary spur routes approximately 12 feet wide and temporary workspace would be needed during construction for material storage, conductor-tensioning sites, and to accommodate vehicles and equipment.

Authorization of this proposal may require amending the Cedar Beaver Garfield Antimony RMP, approved in 1986, by changing approximately 594 acres of an existing 27,494-acre Visual Resource Management (VRM) Class II to Class III or IV. This would occur in the Mineral Mountains along the existing Pass Road, which is a Beaver County, Utah, recorded Class B Road. By this notice, the BLM is complying with requirements in 43 CFR 1610.2(c) to notify the public of potential amendments to land use plans,

predicated on the finding of the EA. Should an RMP amendment be necessary, it will be based on the following preliminary planning criteria:

- The RMP amendment will focus only on VRM class designations;
- The RMP amendment will comply with NEPA, FLPMA, and other applicable laws, executive orders, regulations and policy;
- The RMP amendment will recognize valid existing rights;
- The BLM will use a collaborative and multi-jurisdictional approach, where possible to determine the desired future condition of the public lands;
- The BLM will consider the management prescriptions on adjoining lands to minimize inconsistent management; and
- Management prescriptions will focus on the relative values of resources and not necessarily the combination of uses that will give the greatest economic return or economic output.

The purpose of the public scoping process is to determine relevant issues and planning criteria that will influence the scope of the environmental analysis, including alternatives, and guide the process for developing the EA. At present, the BLM has identified the following preliminary issues: cultural resources; crucial deer, elk, greater sage-grouse and upland game habitat, migratory bird habitat; special status species; surface water quality; recreation; socioeconomics; soil erosion; riparian areas; forestry; vegetation management; wilderness character; and visual resources.

You may submit comments on issues and planning criteria in writing to the BLM at any public scoping meeting, or you may submit them to the BLM using one of the methods listed in the **ADDRESSES** section above. To be most helpful, comments should be submitted by the close of the 30-day scoping period or within 15 days after the last public meeting, whichever is later.

The BLM will use NEPA public participation requirements to assist the agency in satisfying the public involvement requirements under Section 106 of the National Historic Preservation Act (NHPA) (16 U.S.C. 470(f)) pursuant to 36 CFR 800.2(d)(3). The information about historic and cultural resources within the area potentially affected by the proposed project will assist the BLM in identifying and evaluating impacts to such resources in the context of both NEPA and Section 106 of the NHPA.

The BLM will consult with Indian tribes on a government-to-government basis in accordance with Executive Order 13175 and other policies. Tribal concerns, including impacts on Indian trust assets and potential impacts to cultural resources, will be given due consideration. Federal, State, and local agencies, along with tribes and other stakeholders that may be interested in or affected by the proposed project that the BLM is evaluating, are invited to participate in the scoping process and, if eligible, may request or be requested by the BLM to participate in the development of the environmental analysis as a cooperating agency.

Before including an address, phone number, email address, or other personal identifying information in your comment, be aware that your entire comment—including your personal identifying information—may be made publicly available at any time. While you can ask us to withhold personal identifying information from public review, we cannot guarantee that we will be able to do so.

Authority: 40 CFR 1501.7 and 43 CFR 1610.2.

Shelley J. Smith,

Acting Associate State Director.

[FR Doc. 2012–20892 Filed 8–23–12; 8:45 am]

BILLING CODE 4310–DQ–P

DEPARTMENT OF THE INTERIOR

Bureau of Land Management

[LLMT926000–L19100000–BJ0000–LRCME1G05121]

Notice of Filing of Plats of Survey; North Dakota

AGENCY: Bureau of Land Management, Interior.

ACTION: Notice of filing of plats of survey.

SUMMARY: The Bureau of Land Management (BLM) will file the plat of survey of the lands described below in the BLM Montana State Office, Billings, Montana, on September 24, 2012.

DATES: Protests of the survey must be filed before September 24, 2012 to be considered.

ADDRESSES: Protests of the survey should be sent to the Branch of Cadastral Survey, Bureau of Land Management, 5001 Southgate Drive, Billings, Montana 59101–4669.

FOR FURTHER INFORMATION CONTACT: Marvin Montoya, Cadastral Surveyor, Branch of Cadastral Survey, Bureau of Land Management, 5001 Southgate Drive, Billings, Montana 59101–4669, telephone (406) 896–5124 or (406) 896–5009, *Marvin_Montoya@blm.gov.* Persons who use a telecommunications device for the deaf (TDD) may call the Federal Information Relay Service (FIRS) at 1–800–877–8339 to contact the above individual during normal business hours. The FIRS is available 24 hours a day, 7 days a week, to leave a message or question with the above individual. You will receive a reply during normal business hours.

SUPPLEMENTARY INFORMATION: This survey was executed at the request of the Regional Director, Bureau of Indian Affairs, Great Plains Region, Aberdeen, South Dakota, and was necessary to determine individual and tribal trust lands.

The lands we surveyed are:

Fifth Principal Meridian, North Dakota

T. 151 N., R. 64 W.

The plat, in three sheets, representing the dependent resurvey of a portion of the subdivisional lines, a portion of the subdivision of section 15, and a portion of the adjusted 1885 meanders of Wood Lake in section 15, the subdivision of section 15, and the survey of the partition of Lot 5 of section 15 into two parcels, in Township 151 North, Range 64 West, Fifth Principal Meridian, North Dakota, was accepted August 13, 2012.

We will place a copy of the plat, in three sheets, and related field notes we described in the open files. They will be available to the public as a matter of information. If the BLM receives a protest against this survey, as shown on this plat, in three sheets, prior to the date of the official filing, we will stay the filing pending our consideration of the protest.

We will not officially file this plat, in three sheets, until the day after we have accepted or dismissed all protests and they have become final, including decisions or appeals.

Authority: 43 U.S.C. Chap. 3.

Josh Alexander,

Acting Chief Cadastral Surveyor, Division of Resources.

[FR Doc. 2012–20902 Filed 8–23–12; 8:45 am]

BILLING CODE 4310–DN–P

DEPARTMENT OF THE INTERIOR

Bureau of Land Management

[LLWYD10000.L14300000.EU0000; WYW–161972; WYW–176935; WYW–163855]

Notice of Realty Action: Termination of Recreation and Public Purposes Act Classifications and Opening of Lands; Wyoming

AGENCY: Bureau of Land Management, Interior.

ACTION: Notice.

SUMMARY: This notice terminates the existing classifications in their entirety or in part for public lands at three locations that were classified as suitable for lease/disposal under the Recreation and Public Purposes (R&PP) Act. Additionally, this notice opens these public lands to the operation of the public land laws generally, including the 1872 Mining Law. The classification termination and opening order will affect a total of 333.17 acres of public lands within Sublette County, Wyoming.

DATES: The effective date is August 24, 2012.

FOR FURTHER INFORMATION CONTACT: Tracy Hoover, Realty Specialist, BLM Pinedale Field Office, 1625 West Pine Street, P.O. Box 768, Pinedale, Wyoming 82941, 307–367–5342.

SUPPLEMENTARY INFORMATION: On October 26, 1999, the Bureau of Land Management (BLM) published a notice in the **Federal Register** announcing that it had classified 40 acres of public land under its jurisdiction as suitable for lease pursuant to the R&PP Act (44 Stat. 741), as amended, and 43 CFR 2741.5 (64 FR 57649). Upon classification, the BLM leased the land to Sublette County for the construction, operation, and maintenance of a recreation site under BLM Serial Number WYW–82504. This lease expired at Sublette County's request on June 20, 2011.

Pursuant to 43 CFR 2091.2–2 and 2461.5(c), and upon publication of this notice in the **Federal Register**, the BLM is terminating the classification in its entirety for the subject land, which is described as follows:

6th Principal Meridian

T. 34 N., R. 110 W.,
Sec. 24, NE¼NE¼.

The area described contains 40 acres in Sublette County.

In the **Federal Register** on August 23, 2006 (71 FR 49472), as corrected on October 13, 2006 (71 FR 60566), the BLM classified 283.17 acres of public land under its jurisdiction as suitable for lease pursuant to the R&PP Act (44 Stat. 741), as amended, and 43 CFR 2741.5. Upon classification, the BLM leased the land to Sublette County for the construction, operation, and maintenance of a public golf course under BLM Serial Number WYW–163849. On December 12, 2011, Sublette County requested the lease be terminated, and the BLM accepted the termination.

Pursuant to 43 CFR 2091.2–2 and 2461.5(c), and upon publication of this notice in the **Federal Register**, the BLM is terminating the classification in its entirety for the subject land, which is described as follows:

6th Principal Meridian

T. 33 N., R. 109 W.,
Sec. 5, lots 5 to 9, inclusive;
Sec. 6, lots 9 and 12.

The area described contains 283.17 acres in Sublette County.

In the **Federal Register** on August 23, 2006 (71 FR 49472), the BLM classified 40 acres of public land under its jurisdiction as suitable for lease/disposal pursuant to the R&PP Act (44 Stat. 741), as amended, and 43 CFR 2741.5. Upon classification, the BLM patented 30 of the 40 acres to Sublette County for the construction, operation, and maintenance of a county shop under BLM Serial Number WYW–163855.

Pursuant to 43 CFR 2091.2–2 and 2461.5(c), and upon publication of this notice in the **Federal Register**, the BLM is terminating the classification of the remaining 10 acres in its entirety for the subject land, which is described as follows:

6th Principal Meridian

T. 30 N., R. 111 W.,
Sec. 17, SE¼NE¼SE¼;

The area contains 10 acres in Sublette County.

The three areas described aggregate 333.17 acres in Sublette County.

At 8:30 a.m. on September 24, 2012, the 333.17 acres of public lands described above will be opened to operation of public land laws generally, subject to valid existing rights, the provisions of existing withdrawals, and the requirements of applicable law. All valid existing applications received at or prior to 8:30 a.m. on September 24, 2012, will be considered as simultaneously filed at that time. Those received thereafter will be considered in the order of filing.

At 8:30 a.m. on September 24, 2012, the 333.17 acres of public lands described above will be opened to location and entry under the United States mining laws. Appropriation under the general mining laws prior to the date and time of restoration is unauthorized. Any such attempted appropriation, including attempted adverse possession under 30 U.S.C. Sec. 38, shall vest no rights against the United States. Acts required to establish a location and to initiate a right of possession are governed by State law where not in conflict with Federal law. The BLM will not intervene in disputes between rival locators over possessory rights since Congress has provided for such determination in local courts.

Authority: 43 CFR 2461.5(c)(2); 43 CFR 2091.2–2.

Donald A. Simpson,

State Director.

[FR Doc. 2012–20895 Filed 8–23–12; 8:45 am]

BILLING CODE 4310–22–P

DEPARTMENT OF THE INTERIOR

Bureau of Land Management

[LLIDB00100 LF1000000.HT0000 LXSS020D0000 4500034792]

Notice of Temporary Restriction Order for Skinny Dipper Hot Springs, Boise County, ID

AGENCY: Bureau of Land Management, Interior.

ACTION: Notice of Temporary Restriction.

SUMMARY: This serves as notice of a sunset-to-sunrise recreational use restriction of Skinny Dipper Hot Springs is in effect on public lands administered by the Four Rivers Field Office, Bureau of Land Management.

DATES: The restriction will be in effect on the date this notice is published in the **Federal Register** and will remain in effect for two years or until rescinded or modified by the authorized officer or designated Federal officer.

FOR FURTHER INFORMATION CONTACT: Terry Humphrey, Four Rivers Field Manager, at 3948 Development Avenue, Boise, Idaho 83705, via email at *terry_humphrey@blm.gov,* or phone 208–384–3430. Persons who use a telecommunications device for the deaf (TDD) may call the Federal Information Relay Service (FIRS) at 1–800–877–8339 to contact the above individuals during normal business hours. The FIRS is available 24 hours a day, seven days a week, to leave a message or question with the above individuals. You will receive a reply during normal hours.

SUPPLEMENTARY INFORMATION: The parking area adjacent to the Banks-Lowman Highway near mile post 4, the trail from the parking area to Skinny Dipper Hot Springs, and the public lands in Lot 3, Section 25, T. 9 N., R.3 E., Boise Meridian, Boise County, Idaho, are closed from sunset to sunrise each day. The restriction will help provide for public safety, which is currently at high risk. Between 2004 and present there have been at least two fatalities, several assaults, and numerous injuries associated with nighttime use of the area. Due to its location, public safety officers and the public do not have cellular phone or radio access, which adds to concerns regarding night-time

use. In addition, bio-hazardous materials (*e.g.,* discarded hypodermic needles, human feces) are commonly found in the area. The hot springs flow into the South Fork Payette River, which creates the potential for environmental contamination. Many secondary effects associated with the primary activities are causing direct resource harm. These impacts include trash (glass, cans, food), construction of unauthorized structures, and damage/removal of vegetation.

The BLM will post signs at main entry points to the closed area and/or other locations on-site. This restriction will be posted in the Four Rivers Field Office, Boise District BLM. Maps of the affected area and other documents associated with this restriction are available at 3948 Development Avenue, Boise, Idaho 83705. Under the authority of Section 303(a) of the Federal Land Policy and Management Act of 1976 (43 U.S.C. 1733(a)), 43 CFR 8360.0–7, and 43 CFR 8364.1, the Bureau of Land Management will enforce the following rule within the Skinny Dipper Hot Springs use restriction:

You must not be in the closed area between sunset and sunrise.

Exemptions: The following persons are exempt from this order: Federal, State, and local officers and employees in the performance of their official duties; members of organized rescue or firefighting forces in the performance of their official duties; and persons with written authorization from the Bureau of Land Management.

Penalties: Any person who violates the above rule may be tried before a United States Magistrate and fined no more than $1,000, imprisoned for no more than 12 months, or both. Violators may also be subject to the enhanced fines provided for in 18 U.S.C. 3571.

Authority: 43 CFR 8364.1.

Steven A. Ellis,

Idaho State Director.

[FR Doc. 2012–20893 Filed 8–23–12; 8:45 am]

BILLING CODE 4310–GG–P

DEPARTMENT OF THE INTERIOR

National Park Service

[NPS–WASO–NAGPRA–10923; 2200–1100–665]

Notice of Intent To Repatriate Cultural Items: U.S. Department of Agriculture, Forest Service, Coconino National Forest, Flagstaff, AZ

AGENCY: National Park Service, Interior.

ACTION: Notice.

SUMMARY: The U.S. Department of Agriculture (USDA), Forest Service, Coconino National Forest, in consultation with the appropriate Indian tribe, has determined that the cultural items meet the definition of unassociated funerary objects and repatriation to the Indian tribe stated below may occur if no additional claimants come forward. Representatives of any Indian tribe that believes itself to be culturally affiliated with the cultural items may contact the USDA, Forest Service, Southwestern Region.

DATES: Representatives of any Indian tribe that believes it has a cultural affiliation with the cultural items should contact the USDA, Forest Service, Southwestern Region at the address below by September 24, 2012.

ADDRESSES: Dr. Frank E. Wozniak, NAGPRA Coordinator, Southwestern Region, USDA, Forest Service, 333 Broadway Blvd. SE., Albuquerque, NM 87102, telephone (505) 842–3238.

SUPPLEMENTARY INFORMATION: Notice is here given in accordance with the Native American Graves Protection and Repatriation Act (NAGPRA), 25 U.S.C. 3005, of the intent to repatriate cultural items located at the Natural History Museum of Utah and under the control of the Coconino National Forest that meet the definition of unassociated funerary objects under 25 U.S.C. 3001.

This notice is published as part of the National Park Service's administrative responsibilities under NAGPRA, 25 U.S.C. 3003(d)(3). The determinations in this notice are the sole responsibility of the museum, institution, or Federal agency that has control of the Native American cultural items. The National Park Service is not responsible for the determinations in this notice.

History and Description of the Cultural Items

In 1926, four unassociated funerary objects [Catalogue #s 10876, 10877, 10878 and 10879] were removed from Elden Pueblo (site NA 142) in Coconino County, AZ, during legally authorized archaeological excavations conducted by Jesse W. Fewkes of the Smithsonian Institution. The Elden Pueblo (site NA 142) is on the Coconino National Forest. These four objects have been curated at the Natural History Museum of Utah since 1932, when the Smithsonian Institution transferred the objects to the museum. The four unassociated funerary objects are three ceramic bowls and one ceramic jar.

Based on archaeological evidence and material culture, Elden Pueblo (site NA 142) has been identified as a Northern Sinagua site, comprised of a pueblo, pithouses, and outlier pueblos, which were occupied in the second half of the 13th and the first quarter of the 14th centuries A.D. The records at the Natural History Museum of Utah and the Smithsonian Institution indicate that these four cultural items were removed from a burial context and that the human remains were either left in the ground or are not locatable at the present time. Continuities among the ethnographic materials in the Flagstaff area of north central Arizona indicate that the Northern Sinagua sites in that area are affiliated with the Hopi Tribe, Arizona. In addition, oral traditions presented by representatives of the Hopi Tribe support their claims of cultural affiliation with Northern Sinagua sites in this portion of north central Arizona.

Determinations Made by the USDA, Forest Service, Southwestern Region

Officials of the USDA, Forest Service, Southwestern Region and the Coconino National Forest have determined that:

- Pursuant to 25 U.S.C. 3001(3)(B), the four cultural items described above are reasonably believed to have been placed with or near individual human remains at the time of death or later as part of the death rite or ceremony and are believed, by a preponderance of the evidence, to have been removed from a specific burial site of a Native American individual.
- Pursuant to 25 U.S.C. 3001(2), there is a relationship of shared group identity that can be reasonably traced between the unassociated funerary objects and the Hopi Tribe, Arizona.

Additional Requestors and Disposition

Representatives of any other Indian tribe that believes itself to be culturally affiliated with the unassociated funerary objects should contact Dr. Frank E. Wozniak, NAGPRA Coordinator, Southwestern Region, USDA, Forest Service, 333 Broadway Blvd. SE., Albuquerque, NM 87102, (505) 842–3238 before September 24, 2012. Repatriation of the unassociated funerary objects to the Hopi Tribe, Arizona may proceed after that date if no additional claimants come forward.

The Coconino National Forest is responsible for notifying the Hopi Tribe, Arizona that this notice has been published.

Dated: July 24, 2012.

Sherry Hutt,

Manager, National NAGPRA Program.

[FR Doc. 2012–20964 Filed 8–23–12; 8:45 am]

BILLING CODE 4312–50–P

DEPARTMENT OF THE INTERIOR

National Park Service

[NPS–WASO–NAGPRA–10892; 2200–1100–665]

Notice of Inventory Completion: University of Washington, Department of Anthropology, Seattle, WA

AGENCY: National Park Service, Interior.

ACTION: Notice.

SUMMARY: The University of Washington, Department of Anthropology, has completed an inventory of human remains and associated funerary objects, in consultation with the appropriate Indian tribes, and has determined that there is no cultural affiliation between the remains and any present-day Indian tribe. Representatives of any Indian tribe that believes itself to be culturally affiliated with the human remains may contact the Burke Museum acting on behalf of the University of Washington, Department of Anthropology. Disposition of the human remains and associated funerary objects to the Indian tribes stated below may occur if no additional requestors come forward.

DATES: Representatives of any Indian tribe that believes it has a cultural affiliation with the human remains should contact the University of Washington at the address below by September 24, 2012.

ADDRESSES: Peter Lape, Burke Museum, University of Washington, Box 353010, Seattle, WA 98195, telephone (206) 685–3849.

SUPPLEMENTARY INFORMATION: Notice is here given in accordance with the Native American Graves Protection and Repatriation Act (NAGPRA), 25 U.S.C. 3003, of the completion of an inventory of human remains and associated funerary objects under the control of the University of Washington, Department of Anthropology. The human remains and associated funerary objects were removed from an unknown location in South Carolina.

This notice is published as part of the National Park Service's administrative responsibilities under NAGPRA, 25 U.S.C. 3003(d)(3) and 43 CFR 10.11(d). The determinations in this notice are the sole responsibility of the museum, institution, or Federal agency that has control of the Native American human remains. The National Park Service is not responsible for the determinations in this notice.

Consultation

A detailed assessment of the human remains was made by the University of Washington, Department of Anthropology and the Burke Museum professional staff in consultation with representatives of Catawba Indian Nation (aka Catawba Tribe of South Carolina); Cherokee Nation, Oklahoma; Eastern Band of Cherokee Indians of North Carolina; and the United Keetoowah Band of Cherokee Indians in Oklahoma.

History and Description of the Remains

At unknown date, human remains representing, at minimum, seven individuals were removed from an unknown location in South Carolina. It is believed that they were collected by Dr. Daris Swindler prior to his appointment at the University of Washington in 1968. No known individuals were identified. The one associated funerary object is a bag containing non-human bone fragments, soil, seven shell fragments, charcoal, and unmodified stones.

Determinations Made by the University of Washington, Department of Anthropology

Officials of the University of Washington, Department of Anthropology have determined that:

- Based on the cranial morphology and documentation records, the human remains are Native American.
- Pursuant to 25 U.S.C. 3001(2), a relationship of shared group identity cannot be reasonably traced between the Native American human remains and any present-day Indian tribe.
- According to final judgments of the Indian Claims Commission, the land from which the Native American human remains and associated funerary objects were removed is the aboriginal land of the Cherokee. The Cherokee are represented by the modern day Cherokee Nation, Oklahoma; Eastern Band of Cherokee Indians of North Carolina; and the United Keetoowah Band of Cherokee Indians in Oklahoma.
- Multiple lines of evidence, including treaties, Acts of Congress, and Executive Orders, indicate that the land from which the Native American human remains and associated funerary objects were removed is also the aboriginal land of the Catawba Indian Nation (aka Catawba Tribe of South Carolina). The Catawba and the King of England entered into the Treaty of Fort Augusta in 1763. This treaty guaranteed the Catawba 144,000 acres of land in South Carolina, while ceding the remaining portion of their claim to South Carolina. Later in 1840, the Catawba attempted to sell these 144,000 acres to the State of South Carolina in the Treaty of Nation Ford. The Treaty of Nation Ford was nullified by the Federal Government stating that the State did not have authority to enter into this agreement. In 1993, the Catawba settled with the Federal Government and the State of South Carolina. Congress ratified this settlement.
- Pursuant to 25 U.S.C. 3001(9), the human remains described in this notice represent the physical remains of seven individuals of Native American ancestry.
- Pursuant to 25 U.S.C. 3001(3)(A), the object described above is reasonably believed to have been placed with or near individual human remains at the time of death or later as part of the death rite or ceremony.
- Pursuant to 43 CFR 10.11(c)(1), the disposition of the human remains is to Catawba Indian Nation (aka Catawba Tribe of South Carolina); Cherokee Nation, Oklahoma; Eastern Band of Cherokee Indians of North Carolina; and the United Keetoowah Band of Cherokee Indians in Oklahoma.

Additional Requestors and Disposition

Representatives of any Indian tribe that believes itself to be culturally affiliated with the human remains or any other Indian tribe that believes it satisfies the criteria in 43 CFR 10.11(c)(1) should contact Peter Lape, Burke Museum, University of Washington, Box 353010, Seattle, WA 98195, telephone (206) 685–3849, before September 24, 2012. Disposition of the human remains to the Catawba Indian Nation (aka Catawba Tribe of South Carolina); Cherokee Nation, Oklahoma; Eastern Band of Cherokee Indians of North Carolina; and the United Keetoowah Band of Cherokee Indians in Oklahoma may proceed after that date if no additional requestors come forward.

The University of Washington, Department of Anthropology is responsible for notifying the Catawba Indian Nation (aka Catawba Tribe of South Carolina); Cherokee Nation, Oklahoma; Eastern Band of Cherokee Indians of North Carolina; and the United Keetoowah Band of Cherokee Indians in Oklahoma that this notice has been published.

Dated: July 23, 2012.

Melanie O'Brien,

Acting Manager, National NAGPRA Program.

[FR Doc. 2012–20963 Filed 8–23–12; 8:45 am]

BILLING CODE 4312–50–P

DEPARTMENT OF THE INTERIOR

National Park Service

[NPS–WASO–NAGPRA–10912; 2200–1100–665]

Notice of Inventory Completion: Thomas Burke Memorial Washington State Museum, University of Washington, Seattle, WA

AGENCY: National Park Service, Interior.

ACTION: Notice.

SUMMARY: The Thomas Burke Memorial Washington State Museum (Burke Museum), University of Washington, has completed an inventory of human remains, in consultation with the appropriate Indian tribes, and has determined that there is a cultural affiliation between the human remains and a present-day Indian tribe. Representatives of any Indian tribe that believes itself to be culturally affiliated with the human remains may contact the Burke Museum. Repatriation of the human remains to the tribe named below may occur if no additional claimants come forward.

DATES: Representatives of any Indian tribe that believes it has a cultural affiliation with the human remains and associated funerary objects should contact the Burke Museum at the address below by September 24, 2012.

ADDRESSES: Peter Lape, Burke Museum, University of Washington, Box 35101, Seattle, WA 98195, telephone (206) 685–3849.

SUPPLEMENTARY INFORMATION: Notice is here given in accordance with the Native American Graves Protection and Repatriation Act (NAGPRA), 25 U.S.C. 3003, of the completion of an inventory of human remains under the control of the Thomas Burke Memorial Washington State Museum (Burke Museum), University of Washington, Seattle, WA. The human remains were removed from Wrangell, in Southeast Alaska.

This notice is published as part of the National Park Service's administrative responsibilities under NAGPRA, 25 U.S.C. 3003(d)(3). The determinations in this notice are the sole responsibility of the museum, institution, or Federal agency that has control of the Native American human remains. The National Park Service is not responsible for the determinations in this notice.

Consultation

A detailed assessment of the human remains was made by the Burke Museum professional staff in consultation with representatives of the Central Council of Tlingit and Haida Indian Tribes; Petersburg Indian Association; Wrangell Cooperative Association; and Sealaska Heritage Institute, a regional Native Alaskan nonprofit organization.

History and Description of the Remains

In 1918, human remains representing, at minimum, one individual were removed from the further out of two stone cairns on a point in Wrangell, Alaska. These remains were collected by Ernest P. Walker, who donated them to the Burke Museum in November of 1918 (Burke Accn. #1508). No known individuals were identified. No funerary objects are present.

The human remains are consistent with Native American morphology, as evidenced through tooth wear as well as the presence of wormian bones. The town of Wrangell, located on Wrangell Island, was aboriginally within the southern Tlingit tribal group of the Stikine (De Laguna 1990, Goldschmidt and Haas 1998, Smythe 1994). Wrangell was the site of a village of the Stikine (Smythe 1994). The Stikine people are now represented by the modern-day Wrangell Cooperative Association.

Determinations Made by the Burke Museum

Officials of the Burke Museum have determined that:

- Based on anthropological and biological evidence, the human remains are determined to be Native American.
- Pursuant to 25 U.S.C. 3001(9), the human remains described above represent the physical remains of one individual of Native American ancestry.
- Pursuant to 25 U.S.C. 3001(2), there is a relationship of shared group identity that can be reasonably traced between the Native American human remains and the Wrangell Cooperative Association.

Additional Requestors and Disposition

Representatives of any other Indian tribe that believes itself to be culturally affiliated with the human remains should contact Peter Lape, Burke Museum, University of Washington, Box 35101, Seattle, WA 98195, telephone (206) 685–9364, before September 24, 2012. Repatriation of the human remains to the Wrangell Cooperative Association may proceed after that date if no additional claimants come forward.

The Burke Museum is responsible for notifying the Central Council of Tlingit and Haida Indian Tribes; Petersburg Indian Association; Wrangell Cooperative Association; and Sealaska Heritage Institute, a regional Native Alaskan nonprofit organization, that this notice has been published.

Dated: July 23, 2012.

Melanie O'Brien,

Acting Manager, National NAGPRA Program.

[FR Doc. 2012–20960 Filed 8–23–12; 8:45 am]

BILLING CODE 4312–50–P

DEPARTMENT OF THE INTERIOR

National Park Service

[NPS–WASO–NAGPRA–10949; 2200–1100–665]

Notice of Inventory Completion: Herrett Center for Arts and Science, College of Southern Idaho, Twin Falls, ID

AGENCY: National Park Service, Interior.

ACTION: Notice.

SUMMARY: The Herrett Center for Arts and Science, College of Southern Idaho, has completed an inventory of human remains and associated funerary objects in consultation with the appropriate Indian tribes, and has determined that there is a cultural affiliation between the human remains and associated funerary object and present-day Indian tribes. Representatives of any Indian tribe that believes itself to be culturally affiliated with the human remains and associated funerary object may contact the Herrett Center for Arts and Science, College of Southern Idaho. Repatriation of the human remains and associated funerary object to the Indian tribes stated below may occur if no additional claimants come forward.

DATES: Representatives of any Indian tribe that believes it has a cultural affiliation with the human remains and associated funerary object should contact the Herrett Center for Arts and Science at the address below by September 24, 2012.

ADDRESSES: Phyllis Oppenheim, Collections Manager, Herrett Center for Arts and Science, College of Southern Idaho, P.O. Box 1238, Twin Falls, ID 83303–1238, telephone (208) 732–6660.

SUPPLEMENTARY INFORMATION: Notice is here given in accordance with the Native American Graves Protection and Repatriation Act (NAGPRA), 25 U.S.C. 3003, of the completion of an inventory of human remains and associated funerary object in the possession of the Herrett Center for Arts and Science. The human remains and associated funerary object were removed from an unknown location in Arizona.

This notice is published as part of the National Park Service's administrative responsibilities under NAGPRA, 25

U.S.C. 3003(d)(3). The determinations in this notice are the sole responsibility of the museum, institution, or Federal agency that has control of the Native American human remains and associated funerary object. The National Park Service is not responsible for the determinations in this notice.

Consultation

A detailed assessment of the human remains was made by the Herrett Center for Arts and Science professional staff in consultation with representatives of the Gila River Indian Community of the Gila River Indian Reservation, Arizona (on behalf of themselves and the Ak-Chin Indian Community of the Maricopa (Ak Chin) Indian Reservation, Arizona; Salt River Pima-Maricopa of the Salt River Reservation, Arizona; and the Tohono O'odham Nation of Arizona); Hopi Tribe of Arizona; and the Zuni Tribe of the Zuni Reservation, New Mexico (hereafter referred to as ''The Tribes'').

History and Description of the Remains

At an unknown date, human remains representing, at minimum, one individual were removed from an unknown location in Arizona. In 1975, the human remains and associated funerary object were donated to the Herrett Center for Arts and Science, College of Southern Idaho, by the family of James H. Berkley. No known individuals were identified. The one associated funerary object is a ceramic cremation vessel with a lid. The human remains are a cremation, which together with the ceramic cremation vessel, is associated with the Sedentary Period of the Sacaton Phase, dating from A.D. 900–1100. The evidence provided by this burial practice, the associated funerary object, and the geographical provenience of the human remains and associated funerary object supports a cultural affiliation to the Hohokam culture.

Cultural continuity between the prehistoric occupants of the region and present-day O'odham and Puebloan peoples is supported by continuities in settlement patterns, architectural technologies, basketry, textiles, ceramic technology, ritual practices, and oral traditions. Documentation submitted by representatives of the Gila River Indian Community of the Gila River Indian Reservation, Arizona establishes cultural continuities between the ancient Hohokam and present-day O'odham tribes. The descendants of the O'odham peoples of the area described above are members of the Ak-Chin Indian Community of the Maricopa (Ak Chin) Indian Reservation, Arizona; Gila River Indian Community of the Gila River Indian Reservation, Arizona; Salt River Pima-Maricopa Indian Community of the Salt River Reservation, Arizona; and the Tohono O'odham Nation of Arizona. The descendants of the Puebloan peoples of the area described above are members of the Hopi Tribe of Arizona and the Zuni Tribe of the Zuni Reservation, New Mexico.

Determinations Made by the Herrett Center for Arts and Science, College of Southern Idaho

Officials of the Herrett Center for Arts and Science, College of Southern Idaho, have determined that:

- Pursuant to 25 U.S.C. 3001(9), the human remains described in this notice represent the physical remains of one individual of Native American ancestry.
- Pursuant to 25 U.S.C. 3001(3)(A), the one object described above is reasonably believed to have been placed with or near individual human remains at the time of death or later as part of the death rite or ceremony.
- Pursuant to 25 U.S.C. 3001(2), there is a relationship of shared group identity that can be reasonably traced between the Native American human remains and associated funerary object and The Tribes.

Additional Requestors and Disposition

Representatives of any Indian tribe that believes itself to be culturally affiliated with the human remains and associated funerary object should contact Phyllis Oppenheim, Collections Manager, Herrett Center for Arts and Science, College of Southern Idaho, PO Box 1238, Twin Falls, ID 83303–1238, telephone (208) 732–6660, before September 24, 2012. Repatriation of the human remains and associated funerary object to The Tribes may proceed after that date if no additional claimants come forward.

The Herrett Center for Arts and Science is responsible for notifying The Tribes that this notice has been published.

Dated: July 26, 2012.

Melanie O'Brien,

Acting Manager, National NAGPRA Program.

[FR Doc. 2012–20959 Filed 8–23–12; 8:45 am]

BILLING CODE 4312–50–P

DEPARTMENT OF THE INTERIOR

National Park Service

[NPS–WASO–NAGPRA–11017; 2200–1100–665]

Notice of Inventory Completion: Southern Oregon Historical Society, Medford, OR

AGENCY: National Park Service, Interior.

ACTION: Notice.

SUMMARY: The Southern Oregon Historical Society has completed an inventory of human remains and associated funerary objects, in consultation with the appropriate Indian tribes, and has determined that there is no cultural affiliation between the remains and any present-day Indian tribe. Representatives of any Indian tribe that believes itself to be culturally affiliated with the human remains may contact the Southern Oregon Historical Society. Disposition of the human remains and associated funerary objects to the Indian tribe stated below may occur if no additional requestors come forward.

DATES: Representatives of any Indian tribe that believes it has a cultural affiliation with the human remains should contact the Southern Oregon Historical Society at the address below by September 24, 2012.

ADDRESSES: Tina Reuwsaat, Southern Oregon Historical Society, 106 N. Central Ave., Medford, OR 97501, telephone (541) 858–1724 ext. 1001.

SUPPLEMENTARY INFORMATION: Notice is here given in accordance with the Native American Graves Protection and Repatriation Act (NAGPRA), 25 U.S.C. 3003, of the completion of an inventory of human remains and associated funerary objects in the possession of the Southern Oregon Historical Society, Medford, OR. The human remains and associated funerary objects were removed from a site near the village of Buncom, in Jackson County, OR.

This notice is published as part of the National Park Service's administrative responsibilities under NAGPRA, 25 U.S.C. 3003(d)(3) and 43 CFR 10.11(d). The determinations in this notice are the sole responsibility of the museum, institution, or Federal agency that has control of the Native American human remains. The National Park Service is not responsible for the determinations in this notice.

Consultation

A detailed assessment of the human remains was made by the Southern Oregon Historical Society professional

staff in consultation with representatives of the Confederated Tribes of the Grand Ronde Community of Oregon and the Cow Creek Band of Umpqua Indians of Oregon. The following tribes were contacted without response: Confederated Tribes of Coos, Lower Umpqua and Siuslaw Indians of Oregon; Confederated Tribes of Siletz Indians of Oregon (previously listed as the Confederated Tribes of the Siletz Reservation); Coquille Tribe of Oregon; and the Quartz Valley Indian Community of the Quartz Valley Reservation of California.

History and Description of the Remains

Sometime prior to 1952, human remains representing, at minimum, two individuals, were collected by O.N. Snavely from a site near the village of Buncom, in Jackson County, OR. Mr. Snavely ''found this grave while mining'' on private land along the Little Applegate River, two miles from the confluence with the Big Applegate river at the mouth of Carberry Creek. In 1952, Mr. Snavely donated the human remains and associated funerary objects to the Southern Oregon Historical Society. The collection includes ten human teeth. No known individuals were identified. The 387 associated funerary objects include 1 metate; 1 metal cowbell; 1 small metal cow bell; 1 metal powder flask; 1 rusted frying pan; 1 copper cooking pan; 1 piece of a broken china saucer; 1 white saucer; 4 fragments of a broken cup; 3 pieces of an inkwell; 1 wood knife handle; 1 metal knife handle; 2 rusted tablespoons; 2 pieces of a pocket watch; 2 rusted bullet molds; 7 small bells; 2 pieces of a pair of scissors; 1 metal part with rings; 1 large knife with a curved blade; 1 knife blade with beads attached; 2 gold rings; 8 shells; 97 dentalia shells; 4 uniform buttons; 5 separate bags of beads; 96 thimbles; 17 buttons of various sizes; 8 rusted metal rings; 1 elk tooth with a drilled hole; 86 white shell beads; 22 pine nut beads; and 6 small glass medicine bottles.

Determinations Made by the Southern Oregon Historical Society

Officials of the Southern Oregon Historical Society have determined that:

- Based on collection records and analysis by archaeologist Dr. Ted Goebel, the human remains are Native American.
- Pursuant to 25 U.S.C. 3001(2), a relationship of shared group identity cannot be reasonably traced between the Native American human remains and any present-day Indian tribe.
- Credible lines of evidence indicate that the land from which the Native American human remains and associated funerary objects were removed is the aboriginal land of the Confederated Tribes of the Grand Ronde Community of Oregon.
- Pursuant to 25 U.S.C. 3001(9), the human remains described in this notice represent the physical remains of two individuals of Native American ancestry.
- Pursuant to 25 U.S.C. 3001(3)(A), the 387 objects described above are reasonably believed to have been placed with or near individual human remains at the time of death or later as part of the death rite or ceremony.
- Pursuant to 43 CFR 10.11(c)(1), the disposition of the human remains is to the Confederated Tribes of the Grand Ronde Community of Oregon.

Additional Requestors and Disposition

Representatives of any Indian tribe that believes itself to be culturally affiliated with the human remains or any other Indian tribe that believes it satisfies the criteria in 43 CFR 10.11(c)(1) should contact Tina Reuwsaat at the Southern Oregon Historical Society, 106 N. Central Avenue, Medford, OR 97520, telephone (541) 858–1724 ext. 1001, before September 24, 2012. Disposition of the human remains and associated funerary objects to the Grand Ronde Community of Oregon may proceed after that date if no additional requestors come forward.

The Southern Oregon Historical Society is responsible for notifying the Confederated Tribes of the Grand Ronde Community of Oregon and the Cow Creek Band of Umpqua Indians of Oregon that this notice has been published.

Dated: August 6, 2012.

Sherry Hutt,

Manager, National NAGPRA Program.

[FR Doc. 2012–20885 Filed 8–23–12; 8:45 am]

BILLING CODE 4312–50–P

DEPARTMENT OF THE INTERIOR

National Park Service

[NPS–WASO–NRNHL–10980; 2200–3200–665]

National Register of Historic Places; Notification of Pending Nominations and Related Actions

Nominations for the following properties being considered for listing or related actions in the National Register were received by the National Park Service before July 28, 2012. Pursuant to § 60.13 of 36 CFR Part 60, written comments are being accepted concerning the significance of the nominated properties under the National Register criteria for evaluation. Comments may be forwarded by United States Postal Service, to the National Register of Historic Places, National Park Service, 1849 C St. NW., MS 2280, Washington, DC 20240; by all other carriers, National Register of Historic Places, National Park Service, 1201 Eye St. NW., 8th floor, Washington, DC 20005; or by fax, 202–371–6447. Written or faxed comments should be submitted by September 10, 2012. Before including your address, phone number, email address, or other personal identifying information in your comment, you should be aware that your entire comment—including your personal identifying information—may be made publicly available at any time. While you can ask us in your comment to withhold your personal identifying information from public review, we cannot guarantee that we will be able to do so.

Dated: August 1, 2012.

J. Paul Loether,

Chief, National Register of Historic Places/National Historic Landmarks Program.

DISTRICT OF COLUMBIA

District of Columbia

Peyser Building—Security Savings and Commercial Bank, (Banks and Financial Institutions MPS), 1518 K St. NW., Washington, 12000777

Westory Building, 607 14th St. NW., Washington, 12000778

IOWA

Monona County

Ingemann Danish Evangelical Lutheran Church and Cemetery, 32044 Cty. Rd. E54, Moorhead, 12000779

Pottawattamie County

McCormick Harvesting Machine Company Building, 1001 S. 6th St., Council Bluffs, 12000780

MASSACHUSETTS

Hampden County

Hampden Park Historic District, Roughly bounded by Hampden, Chestnut, Maple, & Dwight Sts., Holyoke, 12000781

School Street Barn, 551 School St., Agawam, 12000782

Suffolk County

Saint Mark's Episcopal Church, 73 Columbia Rd., Boston, 12000783

MONTANA

Lewis and Clark County

Western Life Insurance Company Helena Branch Office, 600 N. Park Ave., Helena, 12000784

NEBRASKA

Lancaster County

Lincoln Veterans Administration Hospital Historic District, (United States Second Generation Veterans Hospitals MPS) 600 S. 70th St., Lincoln, 12000785

OKLAHOMA

Oklahoma County

Mayfair, The, (Midtown Brick Box Apartments 1910–1935, Oklahoma City MPS), 1315 N. Broadway Pl., Oklahoma City, 12000786

TEXAS

Bexar County

Hays Street Bridge, (Historic Bridges of Texas MPS) Hays St. over UPRR, N. Cherry, & Chestnut Sts., San Antonio, 12000787

Travis County

East Main Street Historic District, 111, 113, 115, & 117 E. Main St., Pflugerville, 12000788

UTAH

Carbon County

42Cb0680, (Nine Mile Canyon, Utah MPS) Address Restricted, Price, 12000624
42Cb0138, (Nine Mile Canyon, Utah MPS) Address Restricted, Price, 12000611
42Cb0144, (Nine Mile Canyon, Utah MPS) Address Restricted, Price, 12000639
42Cb0146, (Nine Mile Canyon, Utah MPS) Address Restricted, Price, 12000612
42Cb0230, (Nine Mile Canyon, Utah MPS) Address Restricted, Price, 12000638
42Cb0240, (Nine Mile Canyon, Utah MPS) Address Restricted, Price, 12000613
42Cb0264, (Nine Mile Canyon, Utah MPS) Address Restricted, Price, 12000614
42Cb0593, (Nine Mile Canyon, Utah MPS) Address Restricted, Price, 12000615
42Cb0594, (Nine Mile Canyon, Utah MPS) Address Restricted, Price, 12000616
42Cb0628, (Nine Mile Canyon, Utah MPS) Address Restricted, Price, 12000617
42Cb0629, (Nine Mile Canyon, Utah MPS) Address Restricted, Price, 12000619
42Cb0630, (Nine Mile Canyon, Utah MPS) Address Restricted, Price, 12000620
42Cb0632, (Nine Mile Canyon, Utah MPS) Address Restricted, Price, 12000621
42Cb0637, (Nine Mile Canyon, Utah MPS) Address Restricted, Price, 12000637
42Cb0641, (Nine Mile Canyon, Utah MPS) Address Restricted, Price, 12000622
42Cb0668, (Nine Mile Canyon, Utah MPS) Address Restricted, Price, 12000618
42Cb0676, (Nine Mile Canyon, Utah MPS) Address Restricted, Price, 12000623
42Cb0678, (Nine Mile Canyon, Utah MPS) Address Restricted, Price, 12000636
42Cb0693, (Nine Mile Canyon, Utah MPS) Address Restricted, Price, 12000625
42Cb0695, (Nine Mile Canyon, Utah MPS) Address Restricted, Price, 12000626
42Cb0696, (Nine Mile Canyon, Utah MPS) Address Restricted, Price, 12000627
42Cb0698, (Nine Mile Canyon, Utah MPS) Address Restricted, Price, 12000628
42Cb0700, (Nine Mile Canyon, Utah MPS) Address Restricted, Price, 12000635
42Cb0701, (Nine Mile Canyon, Utah MPS) Address Restricted, Price, 12000629
42Cb0702, (Nine Mile Canyon, Utah MPS) Address Restricted, Price, 12000630
42Cb0703, (Nine Mile Canyon, Utah MPS) Address Restricted, Price, 12000631
42Cb0704, (Nine Mile Canyon, Utah MPS) Address Restricted, Price, 12000632
42Cb0705, (Nine Mile Canyon, Utah MPS) Address Restricted, Price, 12000633
42Cb0707, (Nine Mile Canyon, Utah MPS) Address Restricted, Price, 12000634
42Cb0708, (Nine Mile Canyon, Utah MPS) Address Restricted, Price, 12000640
42Cb0709, (Nine Mile Canyon, Utah MPS) Address Restricted, Price, 12000641
42Cb0712, (Nine Mile Canyon, Utah MPS) Address Restricted, Price, 12000642
42Cb0713, (Nine Mile Canyon, Utah MPS) Address Restricted, Price, 12000643
42Cb0714, (Nine Mile Canyon, Utah MPS) Address Restricted, Price, 12000644
42Cb0715, (Nine Mile Canyon, Utah MPS) Address Restricted, Price, 12000645
42Cb0718, (Nine Mile Canyon, Utah MPS) Address Restricted, Price, 12000646
42Cb0734, (Nine Mile Canyon, Utah MPS) Address Restricted, Price, 12000647
42Cb0735, (Nine Mile Canyon, Utah MPS) Address Restricted, Price, 12000648
42Cb0742, (Nine Mile Canyon, Utah MPS) Address Restricted, Price, 12000649
42Cb0747, (Nine Mile Canyon, Utah MPS) Address Restricted, Price, 12000650
42Cb0749, (Nine Mile Canyon, Utah MPS) Address Restricted, Price, 12000651
42Cb0750, (Nine Mile Canyon, Utah MPS) Address Restricted, Price, 12000652
42Cb0751, (Nine Mile Canyon, Utah MPS) Address Restricted, Price, 12000653
42Cb0752, (Nine Mile Canyon, Utah MPS) Address Restricted, Price, 12000654
42Cb0753, (Nine Mile Canyon, Utah MPS) Address Restricted, Price, 12000655
42Cb0754, (Nine Mile Canyon, Utah MPS) Address Restricted, Price, 12000656
42Cb0755, (Nine Mile Canyon, Utah MPS) Address Restricted, Price, 12000657
42Cb0756, (Nine Mile Canyon, Utah MPS) Address Restricted, Price, 12000658
42Cb0757, (Nine Mile Canyon, Utah MPS) Address Restricted, Price, 12000659
42Cb0758, (Nine Mile Canyon, Utah MPS) Address Restricted, Price, 12000660
42Cb0759, (Nine Mile Canyon, Utah MPS) Address Restricted, Price, 12000661
42Cb0760, (Nine Mile Canyon, Utah MPS) Address Restricted, Price, 12000662
42Cb0761, (Nine Mile Canyon, Utah MPS) Address Restricted, Price, 12000663
42Cb0766, (Nine Mile Canyon, Utah MPS) Address Restricted, Price, 12000666
42Cb0767, (Nine Mile Canyon, Utah MPS) Address Restricted, Price, 12000664
42Cb0769, (Nine Mile Canyon, Utah MPS) Address Restricted, Price, 12000665
42Cb0771, (Nine Mile Canyon, Utah MPS) Address Restricted, Price, 12000667
42Cb0775, (Nine Mile Canyon, Utah MPS) Address Restricted, Price, 12000668
42Cb0776, (Nine Mile Canyon, Utah MPS) Address Restricted, Price, 12000669
42Cb0777, (Nine Mile Canyon, Utah MPS) Address Restricted, Price, 12000670
42Cb0778, (Nine Mile Canyon, Utah MPS) Address Restricted, Price, 12000671
42Cb0779, (Nine Mile Canyon, Utah MPS) Address Restricted, Price, 12000672
42Cb0780, (Nine Mile Canyon, Utah MPS) Address Restricted, Price, 12000673
42Cb0781, (Nine Mile Canyon, Utah MPS) Address Restricted, Price, 12000674
42Cb0783, (Nine Mile Canyon, Utah MPS) Address Restricted, Price, 12000675
42Cb0787, (Nine Mile Canyon, Utah MPS) Address Restricted, Price, 12000676
42Cb0788, (Nine Mile Canyon, Utah MPS) Address Restricted, Price, 12000677
42Cb0790, (Nine Mile Canyon, Utah MPS) Address Restricted, Price, 12000678
42Cb0791, (Nine Mile Canyon, Utah MPS) Address Restricted, Price, 12000679
42Cb0792, (Nine Mile Canyon, Utah MPS) Address Restricted, Price, 12000680
42Cb0794, (Nine Mile Canyon, Utah MPS) Address Restricted, Price, 12000681
42Cb0802, (Nine Mile Canyon, Utah MPS) Address Restricted, Price, 12000682
42Cb0803, (Nine Mile Canyon, Utah MPS) Address Restricted, Price, 12000683
42Cb0806, (Nine Mile Canyon, Utah MPS) Address Restricted, Price, 12000684
42Cb0807, (Nine Mile Canyon, Utah MPS) Address Restricted, Price, 12000685
42Cb0808, (Nine Mile Canyon, Utah MPS) Address Restricted, Price, 12000686
42Cb0810, (Nine Mile Canyon, Utah MPS) Address Restricted, Price, 12000687
42Cb0812, (Nine Mile Canyon, Utah MPS) Address Restricted, Price, 12000688
42Cb0813, (Nine Mile Canyon, Utah MPS) Address Restricted, Price, 12000689
42Cb0814, (Nine Mile Canyon, Utah MPS) Address Restricted, Price, 12000690
42Cb0825, (Nine Mile Canyon, Utah MPS) Address Restricted, Price, 12000691
42Cb0829, (Nine Mile Canyon, Utah MPS) Address Restricted, Price, 12000692
42Cb0831, (Nine Mile Canyon, Utah MPS) Address Restricted, Price, 12000693
42Cb0832, (Nine Mile Canyon, Utah MPS) Address Restricted, Price, 12000695
42Cb0834, (Nine Mile Canyon, Utah MPS) Address Restricted, Price, 12000694
42Cb0859, (Nine Mile Canyon, Utah MPS) Address Restricted, Price, 12000696
42Cb0863, (Nine Mile Canyon, Utah MPS) Address Restricted, Price, 12000697
42Cb0866, (Nine Mile Canyon, Utah MPS) Address Restricted, Price, 12000698
42Cb0867, (Nine Mile Canyon, Utah MPS) Address Restricted, Price, 12000699
42Cb0868, (Nine Mile Canyon, Utah MPS) Address Restricted, Price, 12000700
42Cb0869, (Nine Mile Canyon, Utah MPS) Address Restricted, Price, 12000701
42Cb0870, (Nine Mile Canyon, Utah MPS) Address Restricted, Price, 12000702
42Cb0872, (Nine Mile Canyon, Utah MPS) Address Restricted, Price, 12000703
42Cb0875, (Nine Mile Canyon, Utah MPS) Address Restricted, Price, 12000706
42Cb0877, (Nine Mile Canyon, Utah MPS) Address Restricted, Price, 12000704
42Cb0880, (Nine Mile Canyon, Utah MPS) Address Restricted, Price, 12000707
42Cb0881, (Nine Mile Canyon, Utah MPS) Address Restricted, Price, 12000708
42Cb0882, (Nine Mile Canyon, Utah MPS) Address Restricted, Price, 12000709
42Cb0883, (Nine Mile Canyon, Utah MPS) Address Restricted, Price, 12000710
42Cb0884, (Nine Mile Canyon, Utah MPS) Address Restricted, Price, 12000711

42Cb0885, (Nine Mile Canyon, Utah MPS) Address Restricted, Price, 12000712
42Cb0886, (Nine Mile Canyon, Utah MPS) Address Restricted, Price, 12000713
42Cb0888, (Nine Mile Canyon, Utah MPS) Address Restricted, Price, 12000714
42Cb0889, (Nine Mile Canyon, Utah MPS) Address Restricted, Price, 12000715
42Cb0890, (Nine Mile Canyon, Utah MPS) Address Restricted, Price, 12000716
42Cb0891, (Nine Mile Canyon, Utah MPS) Address Restricted, Price, 12000717
42Cb0892, (Nine Mile Canyon, Utah MPS) Address Restricted, Price, 12000718
42Cb0894, (Nine Mile Canyon, Utah MPS) Address Restricted, Price, 12000719
42Cb0895, (Nine Mile Canyon, Utah MPS) Address Restricted, Price, 12000720
42Cb0896, (Nine Mile Canyon, Utah MPS) Address Restricted, Price, 12000721
42Cb0898, (Nine Mile Canyon, Utah MPS) Address Restricted, Price, 12000722
42Cb0899, (Nine Mile Canyon, Utah MPS) Address Restricted, Price, 12000723
42Cb0900, (Nine Mile Canyon, Utah MPS) Address Restricted, Price, 12000724
42Cb0911, (Nine Mile Canyon, Utah MPS) Address Restricted, Price, 12000725
42Cb0912, (Nine Mile Canyon, Utah MPS) Address Restricted, Price, 12000726
42Cb0919, (Nine Mile Canyon, Utah MPS) Address Restricted, Price, 12000727
42Cb0920, (Nine Mile Canyon, Utah MPS) Address Restricted, Price, 12000728
42Cb0921, (Nine Mile Canyon, Utah MPS) Address Restricted, Price, 12000729
42Cb0922, (Nine Mile Canyon, Utah MPS) Address Restricted, Price, 12000730
42Cb0923, (Nine Mile Canyon, Utah MPS) Address Restricted, Price, 12000731
42Cb0924, (Nine Mile Canyon, Utah MPS) Address Restricted, Price, 12000732
42Cb0955, (Nine Mile Canyon, Utah MPS) Address Restricted, Price, 12000733
42Cb0956, (Nine Mile Canyon, Utah MPS) Address Restricted, Price, 12000734
42Cb0970, (Nine Mile Canyon, Utah MPS) Address Restricted, Price, 12000735
42Cb0971, (Nine Mile Canyon, Utah MPS) Address Restricted, Price, 12000736
42Cb0972, (Nine Mile Canyon, Utah MPS) Address Restricted, Price, 12000737
42Cb0973, (Nine Mile Canyon, Utah MPS) Address Restricted, Price, 12000738
42Cb0975, (Nine Mile Canyon, Utah MPS) Address Restricted, Price, 12000739
42Cb0976, (Nine Mile Canyon, Utah MPS) Address Restricted, Price, 12000740
42Cb0977, (Nine Mile Canyon, Utah MPS) Address Restricted, Price, 12000741
42Cb0981, (Nine Mile Canyon, Utah MPS) Address Restricted, Price, 12000742
42Cb0982, (Nine Mile Canyon, Utah MPS) Address Restricted, Price, 12000743
42Cb0983, (Nine Mile Canyon, Utah MPS) Address Restricted, Price, 12000744
42Cb0984, (Nine Mile Canyon, Utah MPS) Address Restricted, Price, 12000745
42Cb0985, (Nine Mile Canyon, Utah MPS) Address Restricted, Price, 12000746
42Cb0986, (Nine Mile Canyon, Utah MPS) Address Restricted, Price, 12000747
42Cb0994, (Nine Mile Canyon, Utah MPS) Address Restricted, Price, 12000748
42Cb1045, (Nine Mile Canyon, Utah MPS) Address Restricted, Price, 12000749
42Cb1046, (Nine Mile Canyon, Utah MPS) Address Restricted, Price, 12000750
42Cb1047, (Nine Mile Canyon, Utah MPS) Address Restricted, Price, 12000751
42Cb1048, (Nine Mile Canyon, Utah MPS) Address Restricted, Price, 12000752
42Cb1049, (Nine Mile Canyon, Utah MPS) Address Restricted, Price, 12000753
42Cb1050, (Nine Mile Canyon, Utah MPS) Address Restricted, Price, 12000754
42Cb1051, (Nine Mile Canyon, Utah MPS) Address Restricted, Price, 12000755
42Cb1379, (Nine Mile Canyon, Utah MPS) Address Restricted, Price, 12000756
42Cb1466, (Nine Mile Canyon, Utah MPS) Address Restricted, Price, 12000757
42Cb1756, (Nine Mile Canyon, Utah MPS) Address Restricted, Price, 12000759
42Cb1757, (Nine Mile Canyon, Utah MPS) Address Restricted, Price, 12000760
42Cb2006, (Nine Mile Canyon, Utah MPS) Address Restricted, Price, 12000761
42Cb2007, (Nine Mile Canyon, Utah MPS) Address Restricted, Price, 12000762
42Cb2008, (Nine Mile Canyon, Utah MPS) Address Restricted, Price, 1200763
42Cb2009, (Nine Mile Canyon, Utah MPS) Address Restricted, Price, 12000764
42Cb2018, (Nine Mile Canyon, Utah MPS) Address Restricted, Price, 12000765
42Cb2019, (Nine Mile Canyon, Utah MPS) Address Restricted, Price, 12000766
42Cb2023, (Nine Mile Canyon, Utah MPS) Address Restricted, Price, 12000767
42Cb2025, (Nine Mile Canyon, Utah MPS) Address Restricted, Price, 12000768
42Cb2028, (Nine Mile Canyon, Utah MPS) Address Restricted, Price, 12000769
42Cb2031, (Nine Mile Canyon, Utah MPS) Address Restricted, Price, 12000770
42Cb2766, (Nine Mile Canyon, Utah MPS) Address Restricted, Price, 12000771

Duchesne County

42Dc0331, (Nine Mile Canyon, Utah MPS) Address Restricted, Price, 12000772
42Dc0530, (Nine Mile Canyon, Utah MPS) Address Restricted, Price, 12000773
42Dc0645, (Nine Mile Canyon, Utah MPS) Address Restricted, Price, 12000774
42Dc1302, (Nine Mile Canyon, Utah MPS) Address Restricted, Price, 12000775
42Dc1618, (Nine Mile Canyon, Utah MPS) Address Restricted, Price, 12000776
42Dc1619, (Nine Mile Canyon, Utah MPS) Address Restricted, Price, 12000758

[FR Doc. 2012–20815 Filed 8–23–12; 8:45 am]

BILLING CODE 4312–51–P

DEPARTMENT OF THE INTERIOR

Bureau of Ocean Energy Management

Outer Continental Shelf, Gulf of Mexico, Oil and Gas Lease Sales, Western Planning Area Lease Sale 233 and Central Planning Area Lease Sale 231

AGENCY: Bureau of Ocean Energy Management (BOEM), Interior.

ACTION: Notice of Reopening of Scoping Comment Period.

Authority: This scoping comment period is published pursuant to the regulations (40 CFR 1501.7) implementing the provisions of the National Environmental Policy Act of 1969, as amended (42 U.S.C. 4321 *et seq.*) (NEPA).

SUMMARY: Pursuant to the regulations implementing the procedural provisions of NEPA, on July 9, 2012, BOEM announced its intent to prepare a Supplemental EIS for proposed Western Planning Area (WPA) Lease Sale 233 and Central Planning Area (CPA) Lease Sale 231 (WPA/CPA Supplemental EIS) (77 FR 40380). Due to a BOEM email address incorrectly noted in the July 9, 2012, **Federal Register** notice and out of an abundance of caution to ensure that BOEM receives all scoping comments, BOEM is reopening the scoping comment period.

DATES: Scoping comments for this Draft WPA/CPA Supplemental EIS will now be accepted until September 10, 2012.

SUPPLEMENTAL INFORMATION: BOEM is announcing the re-opening of the scoping process for the WPA/CPA Supplemental EIS. Throughout the scoping process, Federal, State, tribal, and local government agencies, and other interested parties have the opportunity to aid BOEM in determining the significant issues, reasonable alternatives, and potential mitigation measures to be analyzed in the WPA/CPA Supplemental EIS, as well as providing additional information. BOEM will use the NEPA commenting process to satisfy the public involvement process for Section 106 of the National Historic Preservation Act (16 U.S.C. 470f), as provided for in 36 CFR 800.2(d)(3).

Comments

All interested parties, including Federal, State, and local government agencies, and the general public, may submit written comments on the scope of the WPA/CPA Supplemental EIS, significant issues that should be addressed, alternatives that should be considered, potential mitigation measures, and the types of oil and gas activities of interest in the proposed lease sale areas.

Written scoping comments may be submitted in one of the following two ways:

(1.) In an envelope labeled ''Scoping for the WPA/CPA Supplemental EIS'' and mailed (or hand delivered) to Mr. Gary D. Goeke, Chief, Regional Assessment Section, Office of Environment (GM 623E), Bureau of Ocean Energy Management, Gulf of Mexico OCS Region, 1201 Elmwood Park

Boulevard, New Orleans, Louisiana 70123–2394; or

(2.) BOEM email address: *Ls_233–231SEIS@boem.gov.*

Petitions, although accepted, do not generally provide relevant information at this stage to assist in scoping. BOEM does not consider anonymous comments. Before including your address, phone number, email address, or other personal identifying information in your comment, you should be aware that your entire comment—including your personal identifying information—may be made publicly available at any time. While you can ask us in your comment to withhold your personal identifying information from public review, we cannot guarantee that we will be able to do so. If you wish for your name and/or address to be withheld, you must state your preference prominently at the beginning of your comment.

All submissions from organizations or businesses and from individuals identifying themselves as representatives or officials of organizations or businesses will be made available for public inspection in their entirety.

FOR FURTHER INFORMATION CONTACT: For information on the WPA/CPA Supplemental EIS, scoping process, the submission of comments, or BOEM's policies associated with this notice, please contact Mr. Gary D. Goeke, Chief, Regional Assessment Section, Office of Environment (GM 623E), Bureau of Ocean Energy Management, Gulf of Mexico OCS Region, 1201 Elmwood Park Boulevard, New Orleans, Louisiana 70123–2394, telephone (504) 736–3233.

Dated: August 2, 2012.

Tommy P. Beaudreau,

Director, Bureau of Ocean Energy Management.

[FR Doc. 2012–20876 Filed 8–23–12; 8:45 am]

BILLING CODE 4310–MR–P

INTERNATIONAL TRADE COMMISSION

[Investigation Nos. 701–TA–488 (Final) and 731–TA–1199–1200 (Final)]

Large Residential Washers From Korea and Mexico

Scheduling of the final phase of countervailing duty and antidumping investigations.

AGENCY: United States International Trade Commission.

ACTION: Notice.

SUMMARY: The Commission hereby gives notice of the scheduling of the final phase of countervailing duty investigation no. 701–TA–488 (Final) under section 705(b) of the Tariff Act of 1930 (19 U.S.C. 1671d(b)) (the Act) and the final phase of antidumping investigation nos. 731–TA–1199–1200 (Final) under section 735(b) of the Act (19 U.S.C. 1673d(b)) to determine whether an industry in the United States is materially injured or threatened with material injury, or the establishment of an industry in the United States is materially retarded, by reason of subsidized imports from Korea and less-than-fair-value imports from Korea and Mexico of large residential washers, provided for in subheading 8450.20.00 of the Harmonized Tariff Schedule of the United States.[1]

For further information concerning the conduct of this phase of the investigations, hearing procedures, and rules of general application, consult the Commission's Rules of Practice and Procedure, part 201, subparts A through E (19 CFR part 201), and part 207, subparts A and C (19 CFR part 207).

DATES: *Effective Date:* August 3, 2012.

FOR FURTHER INFORMATION CONTACT: Edward Petronzio (202–205–3176), Office of Investigations, U.S. International Trade Commission, 500 E Street SW., Washington, DC 20436. Hearing-impaired persons can obtain information on this matter by contacting the Commission's TDD terminal on 202–205–1810. Persons with mobility impairments who will need special assistance in gaining access to the Commission should contact the Office of the Secretary at 202–205–2000. General information concerning the Commission may also be obtained by accessing its internet server (*http://www.usitc.gov*). The public record for these investigations may be viewed on the Commission's electronic docket (EDIS) at *http://edis.usitc.gov*.

SUPPLEMENTARY INFORMATION:

Background. The final phase of these investigations is being scheduled as a result of affirmative preliminary determinations by the Department of Commerce that certain benefits which constitute subsidies within the meaning of section 703 of the Act (19 U.S.C. 1671b) are being provided to manufacturers, producers, or exporters in Korea of large residential washers, and that imports of such products from Korea and Mexico are being sold in the United States at less than fair value within the meaning of section 733 of the Act (19 U.S.C. 1673b). The investigations were requested in a petition filed on December 30, 2011, by Whirlpool Corporation, Benton Harbor, MI.

Participation in the investigations and public service list. Persons, including industrial users of the subject merchandise and, if the merchandise is sold at the retail level, representative consumer organizations, wishing to participate in the final phase of these

[1] For purposes of these investigations, the Department of Commerce has defined the subject merchandise as: ''all automatic clothes washing machines, regardless of the orientation of the rotational axis, except as noted below, with a cabinet width (measured from its widest point) of at least 24.5 inches (62.23 cm) and no more than 32.0 inches (81.28 cm). Also covered are certain subassemblies used in large residential washers, namely: (1) All assembled cabinets designed for use in large residential washers which incorporate, at a minimum: (a) At least three of the six cabinet surfaces; and (b) a bracket; (2) all assembled tubs designed for use in large residential washers which incorporate, at a minimum: (a) A tub; and (b) a seal; (3) all assembled baskets designed for use in large residential washers which incorporate, at a minimum: (a) A side wrapper; (b) a base; and (c) a drive hub; and (4) any combination of the foregoing subassemblies.

Excluded from the scope are stacked washer-dryers and commercial washers. The term 'stacked washer-dryers' denotes distinct washing and drying machines that are built on a unitary frame and share a common console that controls both the washer and the dryer. The term 'commercial washer' denotes an automatic clothes washing machine designed for the 'pay per use' market meeting either of the following two definitions: (1)(a) It contains payment system electronics; (b) it is configured with an externally mounted steel frame at least six inches high that is designed to house a coin/token operated payment system (whether or not the actual coin/token operated payment system is installed at the time of importation); (c) it contains a push button user interface with a maximum of six manually selectable wash cycle settings, with no ability of the end user to otherwise modify water temperature, water level, or spin speed for a selected wash cycle setting; and (d) the console containing the user interface is made of steel and is assembled with security fasteners; or (2)(a) it contains payment system electronics; (b) the payment system electronics are enabled (whether or not the payment acceptance device has been installed at the time of importation) such that, in normal operation, the unit cannot begin a wash cycle without first receiving a signal from a bonafide payment acceptance device such as an electronic credit card reader; (c) it contains a push button user interface with a maximum of six manually selectable wash cycle settings, with no ability of the end user to otherwise modify water temperature, water level, or spin speed for a selected wash cycle setting; and (d) the console containing the user interface is made of steel and is assembled with security fasteners.

Also excluded from the scope are automatic clothes washing machines with a vertical rotational axis and a rated capacity of less than 3.7 cubic feet, as certified to the U.S. Department of Energy pursuant to 10 CFR 429.12 and 10 CFR 429.20, and in accordance with the test procedures established in 10 CFR Part 430. The products subject to these investigations are currently classifiable under subheading 8450.20.0090 of the Harmonized Tariff System of the United States (HTSUS). Products subject to these investigations may also enter under HTSUS subheadings 8450.11.0040, 8450.11.0080, 8450.90.2000, and 8450.90.6000. Although the HTSUS subheadings are provided for convenience and customs purposes, the written description of the merchandise subject to this scope is dispositive.''

investigations as parties must file an entry of appearance with the Secretary to the Commission, as provided in section 201.11 of the Commission's rules, no later than 21 days prior to the hearing date specified in this notice. A party that filed a notice of appearance during the preliminary phase of the investigations need not file an additional notice of appearance during this final phase. The Secretary will maintain a public service list containing the names and addresses of all persons, or their representatives, who are parties to the investigations.

Limited disclosure of business proprietary information (BPI) under an administrative protective order (APO) and BPI service list. Pursuant to section 207.7(a) of the Commission's rules, the Secretary will make BPI gathered in the final phase of these investigations available to authorized applicants under the APO issued in the investigations, provided that the application is made no later than 21 days prior to the hearing date specified in this notice. Authorized applicants must represent interested parties, as defined by 19 U.S.C. 1677(9), who are parties to the investigations. A party granted access to BPI in the preliminary phase of the investigations need not reapply for such access. A separate service list will be maintained by the Secretary for those parties authorized to receive BPI under the APO.

Staff report. The prehearing staff report in the final phase of these investigations will be placed in the nonpublic record on November 27, 2012, and a public version will be issued thereafter, pursuant to section 207.22 of the Commission's rules.

Hearing. The Commission will hold a hearing in connection with the final phase of these investigations beginning at 9:30 a.m. on December 11, 2012, at the U.S. International Trade Commission Building. Requests to appear at the hearing should be filed in writing with the Secretary to the Commission on or before December 6, 2012. A nonparty who has testimony that may aid the Commission's deliberations may request permission to present a short statement at the hearing. All parties and nonparties desiring to appear at the hearing and make oral presentations should attend a prehearing conference to be held at 9:30 a.m. on December 8, 2012, at the U.S. International Trade Commission Building. Oral testimony and written materials to be submitted at the public hearing are governed by sections 201.6(b)(2), 201.13(f), and 207.24 of the Commission's rules. Parties must submit any request to present a portion of their hearing testimony *in camera* no later than 7 business days prior to the date of the hearing.

Written submissions. Each party who is an interested party shall submit a prehearing brief to the Commission. Prehearing briefs must conform with the provisions of section 207.23 of the Commission's rules; the deadline for filing is December 4, 2012. Parties may also file written testimony in connection with their presentation at the hearing, as provided in section 207.24 of the Commission's rules, and posthearing briefs, which must conform with the provisions of section 207.25 of the Commission's rules. The deadline for filing posthearing briefs is December 18, 2012. In addition, any person who has not entered an appearance as a party to the investigations may submit a written statement of information pertinent to the subject of the investigations, including statements of support or opposition to the petition, on or before December 18, 2012. On January 11, 2013, the Commission will make available to parties all information on which they have not had an opportunity to comment. Parties may submit final comments on this information on or before January 15, 2013, but such final comments must not contain new factual information and must otherwise comply with section 207.30 of the Commission's rules. All written submissions must conform with the provisions of section 201.8 of the Commission's rules; any submissions that contain BPI must also conform with the requirements of sections 201.6, 207.3, and 207.7 of the Commission's rules. Please be aware that the Commission's rules with respect to electronic filing have been amended. The amendments took effect on November 7, 2011. See 76 FR 61937 (Oct. 6, 2011) and the newly revised Commission's Handbook on E-Filing, available on the Commission's web site at *http://edis.usitc.gov*.

Additional written submissions to the Commission, including requests pursuant to section 201.12 of the Commission's rules, shall not be accepted unless good cause is shown for accepting such submissions, or unless the submission is pursuant to a specific request by a Commissioner or Commission staff.

In accordance with sections 201.16(c) and 207.3 of the Commission's rules, each document filed by a party to the investigations must be served on all other parties to the investigations (as identified by either the public or BPI service list), and a certificate of service must be timely filed. The Secretary will not accept a document for filing without a certificate of service.

Authority: These investigations are being conducted under authority of title VII of the Tariff Act of 1930; this notice is published pursuant to section 207.21 of the Commission's rules.

Issued: August 20, 2012.

By order of the Commission.

Lisa R. Barton,

Acting Secretary to the Commission.

[FR Doc. 2012–20836 Filed 8–23–12; 8:45 am]

BILLING CODE 7020–02–P

INTERNATIONAL TRADE COMMISSION

[Investigation Nos. 701–TA–442–443 and 731–TA–1095–1097 (Review)]

Certain Lined Paper School Supplies From China, India, and Indonesia

Determination

On the basis of the record [1] developed in the subject five-year reviews, the United States International Trade Commission (Commission) determines, pursuant to section 751(c) of the Tariff Act of 1930 (19 U.S.C. 1675(c)), that revocation of the countervailing duty order on certain lined paper school supplies from India and the antidumping duty orders on certain lined paper school supplies from China and India would be likely to lead to continuation or recurrence of material injury to an industry in the United States within a reasonably foreseeable time.[2] The Commission also determines that revocation of the countervailing duty order and antidumping duty order on certain lined paper school supplies from Indonesia would not be likely to lead to continuation or recurrence of material injury to an industry in the United States within a reasonably foreseeable time.[3]

Background

The Commission instituted these reviews on August 1, 2011 (76 FR 45851) and determined on November 4, 2011 that it would conduct full reviews (76 FR 72213, November 22, 2011). Notice of the scheduling of the Commission's reviews and of a public hearing to be held in connection therewith was given by posting copies of the notice in the Office of the Secretary, U.S. International Trade Commission, Washington, DC, and by publishing the notice in the **Federal Register** on February 1, 2012 (77 FR

[1] The record is defined in sec. 207.2(f) of the Commission's Rules of Practice and Procedure (19 CFR 207.2(f)).

[2] Commissioners Okun, Pearson, and Johanson dissent with respect to India.

[3] Chairman Williamson dissenting.

5055). The hearing was held in Washington, DC, on June 12, 2012, and all persons who requested the opportunity were permitted to appear in person or by counsel.

The Commission transmitted its determinations in these reviews to the Secretary of Commerce on August 17, 2012. The views of the Commission are contained in USITC Publication 4344 (August 2012), entitled *Certain Lined Paper School Supplies from China, India, and Indonesia: Investigation Nos. 701–TA–442–443 and 731–TA–1095–1097 (Review).*

Issued: August 20, 2012.

By order of the Commission.

Lisa R. Barton,

Acting Secretary to the Commission.

[FR Doc. 2012–20834 Filed 8–23–12; 8:45 am]

BILLING CODE 7020–02–P

INTERNATIONAL TRADE COMMISSION

[Docket No. 2910]

Certain Wireless Communication Devices, Portable Music and Data Processing Devices, Computers, and Components Thereof; Notice of Receipt of Complaint; Solicitation of Comments Relating to the Public Interest

AGENCY: U.S. International Trade Commission.

ACTION: Notice.

SUMMARY: Notice is hereby given that the U.S. International Trade Commission has received a complaint entitled *Wireless Communication Devices, Portable Music and Data Processing Devices, Computers, and Components Thereof,* DN 2910; the Commission is soliciting comments on any public interest issues raised by the complaint or complainant's filing under section 210.8(b) of the Commission's Rules of Practice and Procedure (19 CFR 210.8(b)).

FOR FURTHER INFORMATION CONTACT: Lisa R. Barton, Acting Secretary to the Commission, U.S. International Trade Commission, 500 E Street SW., Washington, DC 20436, telephone (202) 205–2000. The public version of the complaint can be accessed on the Commission's electronic docket (EDIS) at *http://edis.usitc.gov,* and will be available for inspection during official business hours (8:45 a.m. to 5:15 p.m.) in the Office of the Secretary, U.S. International Trade Commission, 500 E Street SW., Washington, DC 20436, telephone (202) 205–2000.

General information concerning the Commission may also be obtained by accessing its Internet server (*http://www.usitc.gov*). The public record for this investigation may be viewed on the Commission's electronic docket (EDIS) at *http://edis.usitc.gov.* Hearing-impaired persons are advised that information on this matter can be obtained by contacting the Commission's TDD terminal on (202) 205–1810.

SUPPLEMENTARY INFORMATION: The Commission has received a complaint and a submission pursuant to section 210.8(b) of the Commission's Rules of Practice and Procedure filed on behalf of Motorola Mobility LLC; Motorola Mobility Ireland; and Motorola Mobility International Limited on August 17, 2012. The complaint alleges violations of section 337 of the Tariff Act of 1930 (19 U.S.C. 1337) in the importation into the United States, the sale for importation, and the sale within the United States after importation of certain wireless communication devices, portable music and data processing devices, computers, and components thereof. The complaint names as respondent Apple, Inc. of CA.

Proposed respondents, other interested parties, and members of the public are invited to file comments, not to exceed five (5) pages in length, inclusive of attachments, on any public interest issues raised by the complaint or section 210.8(b) filing. Comments should address whether issuance of the relief specifically requested by the complainant in this investigation would affect the public health and welfare in the United States, competitive conditions in the United States economy, the production of like or directly competitive articles in the United States, or United States consumers.

In particular, the Commission is interested in comments that:

(i) Explain how the articles potentially subject to the requested remedial orders are used in the United States;

(ii) identify any public health, safety, or welfare concerns in the United States relating to the requested remedial orders;

(iii) identify like or directly competitive articles that complainant, its licensees, or third parties make in the United States which could replace the subject articles if they were to be excluded;

(iv) indicate whether complainant, complainant's licensees, and/or third party suppliers have the capacity to replace the volume of articles potentially subject to the requested exclusion order and/or a cease and desist order within a commercially reasonable time; and

(v) explain how the requested remedial orders would impact United States consumers.

Written submissions must be filed no later than by close of business, eight calendar days after the date of publication of this notice in the **Federal Register**. There will be further opportunities for comment on the public interest after the issuance of any final initial determination in this investigation.

Persons filing written submissions must file the original document electronically on or before the deadlines stated above and submit 8 true paper copies to the Office of the Secretary by noon the next day pursuant to section 210.4(f) of the Commission's Rules of Practice and Procedure (19 CFR 210.4(f)). Submissions should refer to the docket number (''Docket No. 2910'') in a prominent place on the cover page and/or the first page. (*See* Handbook for Electronic Filing Procedures, *http://www.usitc.gov/secretary/fed_reg_notices/rules/handbook_on_electronic_filing.pdf*). Persons with questions regarding filing should contact the Secretary (202–205–2000).

Any person desiring to submit a document to the Commission in confidence must request confidential treatment. All such requests should be directed to the Secretary to the Commission and must include a full statement of the reasons why the Commission should grant such treatment. *See* 19 CFR 201.6. Documents for which confidential treatment by the Commission is properly sought will be treated accordingly. All nonconfidential written submissions will be available for public inspection at the Office of the Secretary and on EDIS.

This action is taken under the authority of section 337 of the Tariff Act of 1930, as amended (19 U.S.C. 1337), and of sections 201.10 and 210.8(c) of the Commission's Rules of Practice and Procedure (19 CFR 201.10, 210.8(c)).

Issued: August 20, 2012.

By order of the Commission.

Lisa R. Barton,

Acting Secretary to the Commission.

[FR Doc. 2012–20821 Filed 8–23–12; 8:45 am]

BILLING CODE 7020–02–P

INTERNATIONAL TRADE COMMISSION

[Investigation No. 337–TA–853]

Certain Wireless Consumer Electronics Devices and Components Thereof; Institution of Investigation Pursuant to 19 U.S.C. 1337

AGENCY: U.S. International Trade Commission.

ACTION: Notice.

SUMMARY: Notice is hereby given that a complaint was filed with the U.S. International Trade Commission on July 24, 2012, under section 337 of the Tariff Act of 1930, as amended, 19 U.S.C. 1337, on behalf of Technology Properties Limited LLC of Cupertino, California, Phoenix Digital Solutions LLC of Cupertino, California, and Patriot Scientific Corporation of Carlsbad, California. The complaint alleges violations of section 337 based upon the importation into the United States, the sale for importation, and the sale within the United States after importation of certain wireless consumer electronics devices and components thereof by reason of infringement of certain claims of U.S. Patent No. 5,809,336 (''the '336 patent''). The complaint further alleges that an industry in the United States exists as required by subsection (a)(2) of section 337.

The complainants request that the Commission institute an investigation and, after the investigation, issue an exclusion order and cease and desist orders.

ADDRESSES: The complaint, except for any confidential information contained therein, is available for inspection during official business hours (8:45 a.m. to 5:15 p.m.) in the Office of the Secretary, U.S. International Trade Commission, 500 E Street SW., Room 112, Washington, DC 20436, telephone (202) 205–2000. Hearing impaired individuals are advised that information on this matter can be obtained by contacting the Commission's TDD terminal on (202) 205–1810. Persons with mobility impairments who will need special assistance in gaining access to the Commission should contact the Office of the Secretary at (202) 205–2000. General information concerning the Commission may also be obtained by accessing its internet server at *http://www.usitc.gov.* The public record for this investigation may be viewed on the Commission's electronic docket (EDIS) at *http://edis.usitc.gov.*

FOR FURTHER INFORMATION CONTACT: The Office of Unfair Import Investigations, U.S. International Trade Commission, telephone (202) 205–2560.

Authority: The authority for institution of this investigation is contained in section 337 of the Tariff Act of 1930, as amended, and in section 210.10 of the Commission's Rules of Practice and Procedure, 19 CFR 210.10 (2012).

Scope of Investigation: Having considered the complaint, the U.S. International Trade Commission, on August 20, 2012, *Ordered That*—

(1) Pursuant to subsection (b) of section 337 of the Tariff Act of 1930, as amended, an investigation be instituted to determine whether there is a violation of subsection (a)(1)(B) of section 337 in the importation into the United States, the sale for importation, or the sale within the United States after importation of certain wireless consumer electronics devices and components thereof that infringe one or more of claims 1, 6, 7, 9–11, and 13–16 of the '336 patent, and whether an industry in the United States exists as required by subsection (a)(2) of section 337;

(2) Pursuant to Commission Rule 210.50(b)(1), 19 CFR 210.50(b)(1), the presiding administrative law judge shall take evidence or other information and hear arguments from the parties and other interested persons with respect to the public interest in this investigation, as appropriate, and provide the Commission with findings of fact and a recommended determination on this issue, which shall be limited to the statutory public interest factors, 19 U.S.C. 1337(d)(1), (f)(1), (g)(1);

(3) For the purpose of the investigation so instituted, the following are hereby named as parties upon which this notice of investigation shall be served:

(a) The complainants are:

Technology Properties Limited LLC, 20883 Stevens Creek Blvd., Suite 100, Cupertino, CA 95014.

Phoenix Digital Solutions LLC, 20883 Stevens Creek Blvd., Suite 100, Cupertino, CA 95014.

Patriot Scientific Corporation, 701 Palomar Airport Rd., Suite 170, Carlsbad, CA 92011.

(b) The respondents are the following entities alleged to be in violation of section 337, and are the parties upon which the complaint is to be served:

Acer Inc., 8F, No. 88, Section 1, Hsin Tai Wu Road, Hsichih 221, Taipei Hsien, Taiwan.

Acer America Corporation, 333 West San Carlos Street, San Jose, CA 95110.

Amazon.com, Inc., 410 Terry Avenue North, Seattle, WA 98109–5210.

Barnes & Noble, Inc., 122 Fifth Avenue, New York, NY 10011.

Garmin Ltd., Mühlentalstrasse 2, 8200 Schaffhausen, Switzerland.

Garmin International, Inc., 1200 East 151st Street, Olathe, KS 66062.

Garmin USA, Inc., 1200 East 151st Street, Olathe, KS 66062.

HTC Corporation, 23 Xinghua Road, Taoyuan 330, Taiwan.

HTC America, 13920 SE Eastgate Way, Suite #200, Bellevue, WA 98005.

Huawei Technologies Co., Ltd., Huawei Industrial Base, Bantian Longgang, Shenzhen 518129, China.

Huawei North America, 5700 Tennyson Parkway, Suite 500, Plano, TX 75024.

Kyocera Corporation, 6 Takeda Tobadono-cho, Fushmi-ku, Kyoto 612–8501, Japan.

Kyocera Communications, Inc., 9520 Towne Centre Drive, San Diego, CA 92121.

LG Electronics, Inc., LG Twin Towers, 20 Yeouido-dong, Yeongdeungpo-gu, Seoul 150–721, Republic of Korea.

LG Electronics U.S.A., Inc., 1000 Sylvan Avenue, Englewood Cliffs, NJ 07632.

Nintendo Co., Ltd., 11–1 Kamitoba Hokotate-Cho, Minami-Ku, Kyoto 601–8501, Japan.

Nintendo of America, Inc., 4600 150th Avenue NE., Redmond, WA 98052.

Novatel Wireless, Inc., 9645 Scranton Road Suite #205, San Diego, CA 92121.

Samsung Electronics Co., Ltd., Samsung Main Building, 250, Taepyeongno 2-ga, Jung-gu, Seoul 100–742, Republic of Korea.

Samsung Electronics America, Inc., 105 Challenger Road, Ridgefield Park, NJ 07660.

Sierra Wireless, Inc., 13811 Wireless Way, Richmond, British Columbia V6V 3A4, Canada.

Sierra Wireless America, Inc., 2200 Faraday Avenue, Suite 150, Carlsbad, CA 92008.

ZTE Corporation, ZTE Plaza, Keji South Road, Hi & New Tech Industrial Park, Nanshan District, Shenzhen 518057, China.

ZTE (USA) Inc., 2425 N. Central Expressway, Suite 323, Richardson, TX 75080.

(c) The Office of Unfair Import Investigations, U.S. International Trade Commission, 500 E Street SW., Suite 401, Washington, DC 20436; and

(4) For the investigation so instituted, the Chief Administrative Law Judge, U.S. International Trade Commission, shall designate the presiding Administrative Law Judge.

Responses to the complaint and the notice of investigation must be submitted by the named respondents in

accordance with section 210.13 of the Commission's Rules of Practice and Procedure, 19 CFR 210.13. Pursuant to 19 CFR 201.16(d)–(e) and 210.13(a), such responses will be considered by the Commission if received not later than 20 days after the date of service by the Commission of the complaint and the notice of investigation. Extensions of time for submitting responses to the complaint and the notice of investigation will not be granted unless good cause therefor is shown.

Failure of a respondent to file a timely response to each allegation in the complaint and in this notice may be deemed to constitute a waiver of the right to appear and contest the allegations of the complaint and this notice, and to authorize the administrative law judge and the Commission, without further notice to the respondent, to find the facts to be as alleged in the complaint and this notice and to enter an initial determination and a final determination containing such findings, and may result in the issuance of an exclusion order or a cease and desist order or both directed against the respondent.

Issued: Tuesday, August 21, 2012.

By order of the Commission.

Lisa R. Barton,

Secretary to the Commission.

[FR Doc. 2012–20835 Filed 8–23–12; 8:45 am]

BILLING CODE 7020–02–P

INTERNATIONAL TRADE COMMISSION

[Investigation No. 337–TA–746]

Certain Automated Media Library Devices; Determination To Review in Part a Final Initial Determination; Schedule for Filing Written Submissions

AGENCY: U.S. International Trade Commission.

ACTION: Notice.

SUMMARY: Notice is hereby given that the U.S. International Trade Commission has determined to review in part the final initial determination (''ID'') issued by the presiding administrative law judge (''ALJ'') on June 20, 2012, finding no violation of section 337 of the Tariff Act of 1930, as amended, 19 U.S.C. 1337, in this investigation.

FOR FURTHER INFORMATION CONTACT: Cathy Chen, Esq., Office of the General Counsel, U.S. International Trade Commission, 500 E Street SW., Washington, DC 20436, telephone (202) 205–2392. Copies of non-confidential documents filed in connection with this investigation are or will be available for inspection during official business hours (8:45 a.m. to 5:15 p.m.) in the Office of the Secretary, U.S. International Trade Commission, 500 E Street SW., Washington, DC 20436, telephone (202) 205–2000. General information concerning the Commission may also be obtained by accessing its Internet server at *http://www.usitc.gov.* The public record for this investigation may be viewed on the Commission's electronic docket (EDIS) at *http://edis.usitc.gov.* Hearing-impaired persons are advised that information on this matter can be obtained by contacting the Commission's TDD terminal on (202) 205–1810.

SUPPLEMENTARY INFORMATION: This investigation was instituted on November 24, 2010, based upon a complaint filed by Overland Storage of San Diego, California (''Overland'') on October 19, 2010, and supplemented on November 9, 2010. 75 FR 71735 (Nov. 24, 2010). The complaint alleged violations of section 337 of the Tariff Act of 1930 (19 U.S.C. 1337) by reason of infringement of certain claims of U.S. Patent No. 6,328,766 and U.S. Patent No. 6,353,581 (collectively, ''the Asserted Patents''). The notice of investigation named as respondents BDT AG of Rottweil, Germany; BDT Solutions GmbH & Co. KG of Rottweil, Germany; BDT Automation Technology (Zhuhai FTZ), Co., Ltd. of Zhuhai Guandang, China; BDT de Mexico, S. de R.L. de C.V., of Jalisco, Mexico; BDT Products, Inc., of Irvine, California; Dell Inc. of Round Rock, Texas (''Dell''); and International Business Machines Corp. of Armonk, New York (''IBM''). The Office of Unfair Import Investigations was not named as a party.

The ALJ granted BDT Solutions GmbH & Co. KG's motion for summary determination of no violation on September 2, 2011. See Notice of Commission Determination Not to Review an Initial Determination Granting BDT Solutions' Motion for Summary Determination of No Violation of Section 337 (Sep. 21, 2011). On December 5, 2011, the ALJ granted a joint motion to terminate IBM and Dell from the investigation. See Notice of Commission Determination to Affirm an Initial Determination Granting a Joint Motion For Termination of the Investigation by Settlement as to Respondents International Business Machines Corp. and Dell Inc. (Jan. 27, 2012). BDT AG, BDT Automation Technology (Zhuhai FTZ), Co., Ltd., BDT de Mexico, S. de R.L. de C.V., and BDT Products, Inc. (collectively, ''the BDT Respondents'') remain as respondents in the investigation.

On June 20, 2012, the ALJ issued his final ID, finding no violation of section 337 by the BDT Respondents with respect to any of the asserted claims. Specifically, the ALJ found no violation of section 337 by the BDT Respondents in connection with claims 1–3 and 7–9 of the '766 patent and claims 1–2, 5–7, 9–10, 12 and 15–16 of the '581 patent. The ALJ also found that the asserted claims were not shown to be invalid except for claim 15 of the '581 patent. The ALJ further found that a domestic industry in the United States exists that practices the '766 patent. The ALJ, however, found that a domestic industry in the United States does not exist that practices the '581 patent. The ALJ also found that the BDT Respondents are not entitled to a patent exhaustion defense.

On July 5, 2012, Overland and the BDT Respondents each filed a petition for review of the ID. On July 13, 2012, Overland and the BDT Respondents each filed a response.

Having examined the record of this investigation, including the ALJ's final ID, the petitions for review, and the responses thereto, the Commission has determined to review the ALJ's final ID in part. Specifically, with respect to the '766 patent, the Commission has determined to review the ALJ's findings on contributory infringement, validity and patent exhaustion. With respect to the '581 patent, the Commission has determined to review the ALJ's construction of the claim term ''linear array,'' and the ALJ's findings on infringement, validity, domestic industry and patent exhaustion.

The parties are requested to brief their positions on the issues under review with reference to the applicable law and the evidentiary record. In connection with its review, the Commission is only interested in responses to the following questions. Each party's brief responding to the following questions should be no more than 50 pages.

1. The ALJ found that the BDT Respondents did not prove by clear and convincing evidence that the IBM 3570, 3575, 7331, 7336 and 3494 documents qualify as printed publications under 35 U.S.C. 102. For each respective IBM document, please identify all evidence in the record that supports a finding that the document was publicly accessible before the filing date of the '766 patent.

2. To the extent the IBM 3570, 7331, 7336 and 3494 documents qualify as printed publications under 35 U.S.C. 102, how does each document either alone or in combination with other prior art of record anticipate or render obvious the asserted claims of the '766

patent? Please specify what prior art, if any, allegedly combines with the respective IBM document(s) to render obvious the asserted claims, and why. We are particularly interested in how the respective IBM documents, either alone or in combination with other prior art, expressly or inherently disclose or suggest the features of ''said controller is configured such that a subset of said plurality of media elements and a subset of said plurality of media element drives are available for read/write access by a first one of said plurality of host computers and are unavailable for read/write access by a second one of said plurality of host computers'' in claim 1 and the ''queuing'' and ''sequentially performing'' steps in claim 2. Please cite only record evidence and relevant legal authority to support your position. Arguments not made before the ALJ will not be considered.

3. The ALJ found that Overland did not prove that the BDT Respondents possessed the requisite knowledge that the acts of IBM and Dell constituted patent infringement. Please identify all evidence in the record that supports a finding of contributory infringement of the '766 patent.

4. Please comment on Overland's assertion that its evidence and analysis for domestic industry with respect to its NEO 2000, 2000e, 4000 and 4000e tape libraries were undisputed. Please cite all evidence in the record that supports your position.

5. The BDT Respondents raise the question of whether the settlement agreement and the license agreement between Overland and IBM exhaust Overland's rights in the Asserted Patents as to an upstream, unlicensed supplier. Please address the ALJ's finding that the license agreement itself, as opposed to a sale of the patented goods, constitutes a ''first authorized sale'' for purposes of patent exhaustion in view of pertinent legal authorities (*e.g., Quanta Computer, Inc.* v. *LG Elecs., Inc.,* 553 U.S. 617 (2008); *LG Elecs., Inc.* v. *Bizcom Elecs., Inc.,* 453 F.3d 1364 (Fed. Cir. 2006); *Excelsior Tech. Inc.* v. *Pabst Licensing GMBH & Co.,* KG, 541 F.3d 1373 (Fed. Cir. 2008); *LG Elecs. Inc.* v. *Hitachi Ltd.,* 655 F. Supp. 2d 1036 (N.D. Cal. 2009); and *Tessera, Inc.* v. *Intl. Trade Comm'n,* 646 F.3d 1357 (Fed. Cir. 2011)).

In connection with the final disposition of this investigation, the Commission may (1) issue an order that could result in the exclusion of the subject articles from entry into the United States, and/or (2) issue one or more cease and desist orders that could result in the respondent(s) being required to cease and desist from engaging in unfair acts in the importation and sale of such articles. Accordingly, the Commission is interested in receiving written submissions that address the form of remedy, if any, that should be ordered. If a party seeks exclusion of an article from entry into the United States for purposes other than entry for consumption, the party should so indicate and provide information establishing that activities involving other types of entry either are adversely affecting it or likely to do so. For background, *see In the Matter of Certain Devices for Connecting Computers via Telephone Lines,* Inv. No. 337–TA–360, USITC Pub. No. 2843 (December 1994) (Commission Opinion).

If the Commission contemplates some form of remedy, it must consider the effects of that remedy upon the public interest. The factors the Commission will consider include the effect that an exclusion order and/or cease and desist orders would have on (1) the public health and welfare, (2) competitive conditions in the U.S. economy, (3) U.S. production of articles that are like or directly competitive with those that are subject to investigation, and (4) U.S. consumers. The Commission is therefore interested in receiving written submissions that address the aforementioned public interest factors in the context of this investigation.

If the Commission orders some form of remedy, the U.S. Trade Representative, as delegated by the President, has 60 days to approve or disapprove the Commission's action. See Presidential Memorandum of July 21, 2005, 70 FR 43251 (July 26, 2005). During this period, the subject articles would be entitled to enter the United States under bond, in an amount determined by the Commission. The Commission is therefore interested in receiving submissions concerning the amount of the bond that should be imposed if a remedy is ordered.

Written Submissions

The parties to the investigation are requested to file written submissions on the issues identified in this notice. Parties to the investigation, interested government agencies, and any other interested parties are encouraged to file written submissions on the issues of remedy, the public interest, and bonding. Such submissions should address the recommended determination by the ALJ on remedy and bonding with respect to the Asserted Patents. Complainant is also requested to submit proposed remedial orders for the Commission's consideration. Complainant is further requested to state the date that the patents expire and the HTSUS numbers under which the accused products are imported. The written submissions and proposed remedial orders must be filed no later than close of business on Tuesday, September 4, 2012. Reply submissions must be filed no later than the close of business on Wednesday, September 12, 2012. No further submissions on these issues will be permitted unless otherwise ordered by the Commission.

Persons filing written submissions must file the original document electronically on or before the deadlines stated above and submit 8 true paper copies to the Office of the Secretary by noon the next day pursuant to section 210.4(f) of the Commission's Rules of Practice and Procedure (19 CFR 210.4(f)). Submissions should refer to the investigation number (''Inv. No. 337–TA–746'') in a prominent place on the cover page and/or the first page. (*See* Handbook for Electronic Filing Procedures, *http://www.usitc.gov/secretary/fed_reg_notices/rules/handbook_on_electronic_filing.pdf*). Persons with questions regarding filing should contact the Secretary (202–205–2000).

Any person desiring to submit a document to the Commission in confidence must request confidential treatment. All such requests should be directed to the Secretary to the Commission and must include a full statement of the reasons why the Commission should grant such treatment. *See* 19 CFR 201.6. Documents for which confidential treatment by the Commission is properly sought will be treated accordingly. A redacted non-confidential version of the document must also be filed simultaneously with the any confidential filing. All non-confidential written submissions will be available for public inspection at the Office of the Secretary and on EDIS.

The authority for the Commission's determination is contained in section 337 of the Tariff Act of 1930, as amended (19 U.S.C. 1337), and in sections 210.42–46 and 210.50 of the Commission's Rules of Practice and Procedure (19 CFR 210.42–46 and 210.50).

By order of the Commission.

Issued: August 20, 2012.

Lisa R. Barton,

Acting Secretary to the Commission.

[FR Doc. 2012–20795 Filed 8–23–12; 8:45 am]

BILLING CODE 7020–02–P

INTERNATIONAL TRADE COMMISSION

[Investigation No. 337–TA–818]

Certain Devices With Secure Communication Capabilities, Components Thereof, and Products Containing the Same Decision Not To Review an Initial Determination Terminating the Investigation Due To Lack of Standing and Order No. 14 Denying Complainant's Renewed Motion To Amend the Complaint and Notice of Investigation; Termination of the Investigation

AGENCY: U.S. International Trade Commission.

ACTION: Notice.

SUMMARY: Notice is hereby given that the U.S. International Trade Commission has determined not to review an initial determination (''ID'') (Order No. 15) of the presiding administrative law judge (''ALJ'') terminating the above-captioned investigation due to lack of standing of complainant VirnetX, Inc. (''VirnetX'') of Zephyr Cove, Nevada. The Commission has also determined not to review the ALJ's Order No. 14 denying complainant's renewed motion to amend the complaint and notice of investigation to add Science Applications International Corporation (''SAIC'') as a complainant. The Commission has terminated the investigation.

FOR FURTHER INFORMATION CONTACT: Clint Gerdine, Esq., Office of the General Counsel, U.S. International Trade Commission, 500 E Street SW., Washington, DC 20436, telephone (202) 708–2310. Copies of non-confidential documents filed in connection with this investigation are or will be available for inspection during official business hours (8:45 a.m. to 5:15 p.m.) in the Office of the Secretary, U.S. International Trade Commission, 500 E Street SW., Washington, DC 20436, telephone (202) 205–2000. General information concerning the Commission may also be obtained by accessing its Internet server at *http://www.usitc.gov*. The public record for this investigation may be viewed on the Commission's electronic docket (EDIS) at *http://edis.usitc.gov*. Hearing-impaired persons are advised that information on this matter can be obtained by contacting the Commission's TDD terminal on (202) 205–1810.

SUPPLEMENTARY INFORMATION: The Commission instituted this investigation on December 7, 2011, based on a complaint filed by VirnetX. 76 FR 76435–36. The complaint alleges a violation of section 337 of the Tariff Act of 1930, as amended, 19 U.S.C. 1337, in the importation into the United States, the sale for importation, and the sale within the United States after importation of certain devices with secure communication capabilities, components thereof, and products containing the same by reason of infringement of certain claims of U.S. Patent No. 8,051,181 (''the '181 patent''). The complaint further alleges the existence of a domestic industry. The Commission's notice of investigation named Apple Inc. (''Apple'') of Cupertino, California as the sole respondent. No Commission investigative attorney is participating in this investigation.

On April 30, 2012, Apple moved to terminate the investigation based on VirnetX's lack of standing pursuant to Commission rule 210.21(a)(1). VirnetX filed an opposition to the motion.

The ALJ issued the subject ID on July 18, 2012, granting Apple's motion for termination of the investigation. He found that VirnetX does not possess all substantial rights in the '181 patent, and therefore lacks standing to assert the patent in this investigation. On the same date, the ALJ issued Order No. 14 denying VirnetX's renewed motion to amend the complaint and notice of investigation to add SAIC as a complainant. VirnetX petitioned for review of the ALJ's ID and Order No. 14 on July 27, 2012, and Apple filed a response in opposition on August 3, 2012.

Having reviewed the record including the parties' briefing, the Commission has determined not to review the ALJ's ID or Order No. 14, and has terminated the investigation.

The authority for the Commission's determination is contained in section 337 of the Tariff Act of 1930, as amended, 19 U.S.C. 1337, and in sections 210.21 and 210.42(h) of the Commission's Rules of Practice and Procedure, 19 CFR 210.21, 210.42(h).

Issued: August 20, 2012.

By order of the Commission.

Lisa R. Barton,

Acting Secretary to the Commission.

[FR Doc. 2012–20803 Filed 8–23–12; 8:45 am]

BILLING CODE 7020–02–P

DEPARTMENT OF JUSTICE

Notice of Lodging of Consent Decree Under the Comprehensive Environmental Response, Compensation and Liability Act

In accordance with 28 CFR 50.7, notice is hereby given that on August 20, 2012, a Consent Decree in *United States* v. *Exxon Mobil Corporation, et al.,* C.A. No. 1–08–cv–124–IMK (N.D. W.Va.) was lodged with the United States District Court for the Northern District of West Virginia. The Consent Decree resolves the United States' claims, pursuant to Sections 106 and 107(a) of the Comprehensive Environmental Response, Compensation, and Liability Act (''CERCLA''), 42 U.S.C. 9606 and 9607(a), against Exxon Mobil Corporation, Vertellus Specialities Inc. and CBS Corporation related to the Big John's Salvage Site (''Site''), located in Fairmont, West Virginia. The State of West Virginia is a signatory to the Consent Decree. The BJS Site became contaminated with various hazardous substances as the result of the operations and related waste disposal practices of a coal refinery that operated there between approximately 1933 and 1973, and a scrap and salvage facility that operated there from 1973 to the early 1980s. Under the Consent Decree, the three settling parties will pay a portion of the United States' response costs in the amount of $11 million, perform/finance the removal activities selected by the Environmental Protection Agency in its Action Memorandum issued on September 30, 2010, and pay EPA's and the State's future response costs, as defined in the Consent Decree.

The Department of Justice will receive comments relating to the proposed Consent Decree for a period of thirty (30) days from the date of this publication. Comments should be addressed to the Assistant Attorney General, Environment and Natural Resources Division, and either emailed to *pubcomment-ees.enrd@usdoj.gov,* or mailed to P.O. Box 7611, U.S. Department of Justice, Washington, DC 20044–7611, and should refer to *United States* v. *Exxon Mobil Corporation, et al.,* Department of Justice No. 90–11–3–08499.

During the comment period, the proposed Consent Decree, with Appendices A–H, may be examined on the following Department of Justice Web site, *http://www.usdoj/enrd/Consent_Decrees.html.* A copy of the Consent Decree may also be obtained from the Consent Decree Library, P.O. Box 7611,

U.S. Department of Justice, Washington, DC 20044–7611, or by faxing or emailing a request to ''Consent Decree Copy'' (*EESCDCopy.enrd@usdoj.gov*), fax no. (202) 514–0097, phone confirmation number (202) 514–5271. In requesting a copy of the Consent Decree from the Consent Decree Library, please enclose a check in the amount of $23.25 (25 cents per page production cost) for the Consent Decree without the appendices. Several of the appendices are voluminous and the same cost (25 cents per page) will apply. If one or more of the appendices are requested, fax or email the request to ''Consent Decree Copy'' as indicated above and provide the requester's contact information to receive the cost of the requested appendices. Make checks payable to the U.S. Treasury or, if by email or fax, forward a check in that amount to the Consent Decree Library at the stated address.

Maureen Katz,

Assistant Chief, Environmental Enforcement Section, Environment and Natural Resources Division.

[FR Doc. 2012–20883 Filed 8–23–12; 8:45 am]

BILLING CODE 4410–15–P

DEPARTMENT OF JUSTICE

Notice of Lodging of Proposed Fourth Amendment to the Consent Decree Under the Clean Air Act

Notice is hereby given that on August 17, 2012, a proposed Fourth Amendment to Consent Decree was lodged with the United States District Court for the Eastern District of Pennsylvania in *United States of America; Commonwealth of Pennsylvania; City of Philadelphia; State of Oklahoma; and State of Ohio* v. *Sunoco, Inc.,* Civil Action 05–02866.

The Court entered the Original Consent Decree in this case on March 21, 2006. The Court entered the First Amendment to the Consent Decree on June 3, 2009. On August 31, 2011, the Court entered and approved the Second and Third Amendments to the Consent Decree.

This Fourth Amendment to the Consent Decree proposes four revisions to the consent decree. They are: (1) A transfer of uncompleted or ongoing responsibilities for the Philadelphia Refinery to PES R&M LLC; (2) an extension of the time for achieving final SO_2 and NOx emissions limits at Philadelphia's 868 FCCU from 2014 until 2016; (3) allowance of the emissions reductions achieved by reaching the final SO_2 and NOx limits on the 868 FCCU or achieved from the permanent shut down of the Marcus Hook Refinery (to the extent the Philadelphia and Marcus Hook Refineries are determined to be a single source) to be used as credits or offsets in any PSD, major non-attainment and or minor NSR permits provided that the new or modified units meet BACT; and (4) a requirement to install, operate and maintain fence line monitoring of refinery pollutants.

Sunoco has completed the installation of the WGS and SCR at the Philadelphia 1232 FCCU as required under the Consent Decree. PES R&M LLC will step into the shoes of Sunoco for all injunctive relief requirements that have not yet been fulfilled or that are ongoing. The amendment changes references from ''Sunoco'' where appropriate to ''PES R&M LLC'', and changes other references, where there are similar requirements across all refineries, to ''PES R&M LLC (with regard to the Philadelphia refinery).''

The publication of this notice opens a period for public comment on the Fourth Amendment to the Consent Decree. Comments should be addressed to the Assistant Attorney General, Environment and Natural Resources Division, and should refer to *United States of America; Commonwealth of Pennsylvania; City of Philadelphia; State of Oklahoma; and State of Ohio* v. *Sunoco, Inc.,* Civil Action 05–02866, Department of Justice No. 90–5–2–1–1744/1. All comments must be submitted no later than thirty (30) days after the publication date of this notice. Comments may be submitted by email to *pubcomment-ees.enrd@usdoj.gov* or mailed to the Assistant Attorney General, U.S. DOJ—ENRD, P.O. Box 7611, Washington, DC 20044–7611.

During the public comment period, the Proposed Fourth Amendment to the Consent Decree may be examined and downloaded for free at the following Department of Justice Web site: *http://www.usdoj.gov/enrd/Consent_Decrees.html.* A copy of the Proposed Fourth Amendment to the Consent Decree may also be obtained by mail from the Consent Decree Library, P.O. Box 7611, U.S. Department of Justice, Washington, DC 20044–7611 or by faxing or emailing a request to ''Consent Decree Copy'' (*EESCDCopy.ENRD@usdoj.gov*), fax no. (202) 514–0097, phone confirmation number (202) 514–5271. If requesting a copy from the Consent Decree Library by mail, please enclose a check in the amount of $8.00 (25 cents per page reproduction cost) payable to the U.S. Treasury or, if requesting by email or fax, forward a check in that amount to the Consent Decree Library at the address given above.

Robert D. Brook,

Assistant Section Chief, Environmental Enforcement Section, Environment and Natural Resources Division.

[FR Doc. 2012–20806 Filed 8–23–12; 8:45 am]

BILLING CODE 4410–15–P

DEPARTMENT OF JUSTICE

Bureau of Alcohol, Tobacco, Firearms and Explosives

[OMB Number 1140–0020]

Agency Information Collection Activities; Proposed Collection; Comments Request: Firearms Transaction Record, Part 1, Over-the-Counter

ACTION: 30-Day Notice of Information Collection.

The Department of Justice (DOJ), Bureau of Alcohol, Tobacco, Firearms and Explosives (ATF) will be submitting the following information collection request to the Office of Management and Budget (OMB) for review and approval in accordance with the Paperwork Reduction Act of 1995. The proposed information collection is published to obtain comments from the public and affected agencies. This proposed information collection was previously published in the **Federal Register,** Volume 77, Number 122, page 37920 on June 25, 2012, allowing for a 60 day comment period.

The purpose of this notice is to allow for an additional 30 days for public comment until September 24, 2012. This process is conducted in accordance with 5 CFR 1320.10.

Written comments concerning this information collection should be sent to the Office of Information and Regulatory Affairs, Office of Management and Budget, Attn: DOJ Desk Officer. The best way to ensure your comments are received is to email them to *oira_submission@omb.eop.gov* or fax them to 202–395–7285. All comments should reference the eight digit OMB number or the title of the collection.

Written comments and suggestions from the public and affected agencies concerning the proposed collection of information are encouraged. Your comments should address one or more of the following four points:

—Evaluate whether the proposed collection of information is necessary for the proper performance of the functions of the agency, including whether the information will have practical utility;

—Evaluate the accuracy of the agency's estimate of the burden of the proposed collection of information, including the validity of the methodology and assumptions used;
—Enhance the quality, utility, and clarity of the information to be collected; and
—Minimize the burden of the collection of information on those who are to respond, including through the use of appropriate automated, electronic, mechanical, or other technological collection techniques or other forms of information technology, e.g., permitting electronic submission of responses.

Summary of Information Collection

(1) *Type of Information Collection:* Extension without change of a currently approved collection.

(2) *Title of the Form/Collection:* Firearms Transaction Record, Part 1, Over-the-Counter.

(3) *Agency form number, if any, and the applicable component of the Department of Justice sponsoring the collection:* Form Number: ATF F 4473 (5300.9) Part 1, Bureau of Alcohol, Tobacco, Firearms and Explosives.

(4) *Affected public who will be asked or required to respond, as well as a brief abstract:* Primary: Individuals or households. Other: Business or other for-profit.

Need for Collection

The form is used to determine the eligibility, under the Gun Control Act (GCA), of a person to receive a firearm from a Federal firearms licensee and to establish the identity of the buyer/transferee. It is also used in law enforcement investigations/inspections to trace firearms and confirm that licensees are complying with their recordkeeping obligations under the GCA.

(5) *An estimate of the total number of respondents and the amount of time estimated for an average respondent to respond:* It is estimated that 14,409,616 respondents will respond to the collection each year and that the total amount of time to read the instructions and complete the form on average is 30 minutes.

(6) *An estimate of the total public burden (in hours) associated with the collection:* ATF estimates 7,204,808 annual total burden hours associated with this collection.

If additional information is required contact: Jerri Murray, Department Clearance Officer, Policy and Planning Staff, Justice Management Division, United States Department of Justice, Two Constitution Square, 145 N Street NE., Room 2E–508, Washington, DC 20530.

Dated: August 21, 2012.

Jerri Murray,

Department Clearance Officer, PRA, United States Department of Justice.

[FR Doc. 2012–20856 Filed 8–23–12; 8:45 am]

BILLING CODE 4410–FY–P

DEPARTMENT OF JUSTICE

Bureau of Alcohol, Tobacco, Firearms and Explosives

[OMB Number 1140–0091]

Agency Information Collection Activities; Proposed Collection; Comments Requested: National Response Team Customer Satisfaction Survey

ACTION: 30-Day notice of information collection under review.

The Department of Justice (DOJ), Bureau of Alcohol, Tobacco, Firearms and Explosives (ATF) will be submitting the following information collection request to the Office of Management and Budget (OMB) for review and approval in accordance with the Paperwork Reduction Act of 1995. The proposed information collection is published to obtain comments from the public and affected agencies. This proposed information collection was previously published in the **Federal Register** Volume 77, Number 122, page 37919 on June 25, 2012, allowing for a 60-day comment period.

The purpose of this notice is to allow for an additional 30 days for public comment until September 24, 2012. This process is conducted in accordance with 5 CFR 1320.10.

Written comments concerning this information collection should be sent to the Office of Information and Regulatory Affairs, Office of Management and Budget, Attn: DOJ Desk Officer. The best way to ensure your comments are received is to email them to *oira_submission@omb.eop.gov* or fax them to 202–395–7285. All comments should reference the eight digit OMB number or the title of the collection.

Written comments and suggestions from the public and affected agencies concerning the proposed collection of information are encouraged. Your comments should address one or more of the following four points:

—Evaluate whether the proposed collection of information is necessary for the proper performance of the functions of the agency, including whether the information will have practical utility;
—Evaluate the accuracy of the agency's estimate of the burden of the proposed collection of information, including the validity of the methodology and assumptions used;
—Enhance the quality, utility, and clarity of the information to be collected; and
—Minimize the burden of the collection of information on those who are to respond, including through the use of appropriate automated, electronic, mechanical, or other technological collection techniques or other forms of information technology, e.g., permitting electronic submission of responses.

Summary of Information Collection

(1) *Type of Information Collection:* Reinstatement with change of a previously approved collection.

(2) *Title of the Form/Collection:* National Response Team Customer Satisfaction Survey.

(3) *Agency form number, if any, and the applicable component of the Department of Justice sponsoring the collection:* Form Number: None. Bureau of Alcohol, Tobacco, Firearms and Explosives.

(4) *Affected public who will be asked or required to respond, as well as a brief abstract:* Primary: State, Local or Tribal Government. Other: None.

Need for Collection

The Arson and Explosives Programs Division (AEPD) of the Bureau of Alcohol, Tobacco, Firearms and Explosives distributes a program-specific customer satisfaction survey to more effectively capture customer perception/satisfaction of services. AEPD's strategy is based on a commitment to provide the kind of customer service that will better accomplish ATF's mission.

(5) *An estimate of the total number of respondents and the amount of time estimated for an average respondent to respond:* It is estimated that 20 respondents will complete a 15-minute survey.

(6) *An estimate of the total public burden (in hours) associated with the collection:* There are an estimated 5 annual total burden hours associated with this collection.

If additional information is required contact: Jerri Murray, Department Clearance Officer, Policy and Planning Staff, Justice Management Division, United States Department of Justice, Two Constitution Square, 145 N Street NE., Room 2E–508, Washington, DC 20530.

Dated: August 21, 2012.

Jerri Murray,

Department Clearance Officer, PRA, United States Department of Justice.

[FR Doc. 2012–20858 Filed 8–23–12; 8:45 am]

BILLING CODE 4410–FY–P

DEPARTMENT OF JUSTICE

Office of Justice Programs

[OMB Number 1121–0065]

Agency Information Collection Activities: Existing Collection; Comments Requested: Extension of a Currently Approved Collection; National Corrections Reporting Program

ACTION: Correction 30-Day Notice.

The Department of Justice (DOJ), Bureau of Justice Statistics, will be submitting the following information collection request to the Office of Management and Budget (OMB) for review and approval in accordance with the Paperwork Reduction Act of 1995. The proposed information collection is published to obtain comments from the public and affected agencies. This proposed information collection was previously published in the **Federal Register**, Volume 77, Number 116, pages 36002–36003, on June 15, 2012, allowing for a 60 day comment period.

The purpose of this notice is to allow for an additional 30 days for public comment until September 24, 2012. This process is conducted in accordance with 5 CFR 1320.10.

If you have comments especially on the estimated public burden or associated response time, suggestions, or need a copy of the proposed information collection instrument with instructions or additional information, please contact Elizabeth Ann Carson, Ph.D., Bureau of Justice Statistics, 810 Seventh Street NW., Washington, DC 20531 (phone: 202–616–3496).

Written comments and suggestions from the public and affected agencies concerning the proposed collection of information are encouraged. Your comments should address one or more of the following four points:

—Evaluate whether the proposed collection of information is necessary for the proper performance of the functions of the agency, including whether the information will have practical utility;

—Evaluate the accuracy of the agencies estimate of the burden of the proposed collection of information, including the validity of the methodology and assumptions used;

—Enhance the quality, utility, and clarity of the information to be collected; and

—Minimize the burden of the collection of information on those who are to respond, including through the use of appropriate automated, electronic, mechanical, or other technological collection techniques or other forms of information technology, e.g., permitting electronic submission of responses.

Overview of This Information Collection

(1) *Type of Information Collection:* Extension of a currently approved collection.

(2) *Title of the Form/Collection:* National Corrections Reporting Program. The collection includes the forms: Prisoner Admission Report, Prisoner Release Report, Parole Release Report, Prisoners in Custody at Yearend Report.

(3) *Agency form number, if any, and the applicable component of the Department of Justice sponsoring the collection:* Form number(s): NCRP–1A, NCRP–1B, NCRP–1C, and NCRP–1D. Corrections Statistics Unit, Bureau of Justice Statistics, Office of Justice Programs, United States Department of Justice.

(4) *Affected public who will be asked or required to respond, as well as a brief abstract:* The National Corrections Reporting Program (NCRP) is the only national data collection furnishing annual individual-level information for state prisoners at four points in the incarceration process: prison admission; prison release; annual yearend prison custody census; and discharge from parole/community corrections supervision. BJS, the U.S. Congress, researchers, and criminal justice practitioners use these data to describe annual movements of adult offenders through state correctional systems, as well as to examine long term trends in time served in prison, demographic and offense characteristics of inmates, sentencing practices in the states that submit data, transitions between incarceration and community corrections, and recidivism. Providers of the data are personnel in the states' Departments of Corrections and Parole, and all data are submitted on a voluntary basis. The NCRP collects the following administrative data on each inmate in participating states' custody:

- County of sentencing
- State inmate identification number
- Dates of: Birth; prison admission; prison release; parole discharge; parole eligibility hearing; projected prison release; mandatory prison release
- First and last names
- Demographic information: Sex; race; Hispanic origin; education level
- Offense type and number of counts per inmate for a maximum of three convicted offenses per inmate
- Prior time spent in prison and jail, and prior felony convictions
- Total sentence length imposed
- Additional offenses and sentence time imposed since prison admission
- Type of facility where inmate is serving sentence (for yearend custody census records only, the name of the facility is requested)
- Type of prison admission
- Type of prison release
- Whether inmate was AWOL/escape during incarceration
- Agency assuming custody of inmate released from prison (parole records only)
- Supervision status prior to discharge from parole and type of discharge

In addition, BJS is requesting OMB clearance to add the following items to the NCRP collection, all of which are likely available from the same databases as existing data elements, and should therefore pose minimal additional burden to the respondents, while greatly enhancing BJS' ability to better characterize the corrections systems and populations it serves:

- Date and type of parole admission
- Location of parole discharge or parole office
- FBI identification number
- Prior military service, date and type of last discharge

BJS uses the information gathered in NCRP in published reports and statistics. The reports will be made available to the U.S. Congress, Executive Office of the President, practitioners, researchers, students, the media, others interested in criminal justice statistics, and the general public via the BJS Web site.

(5) *An estimate of the total number of respondents and the amount of time estimated for an average respondent to respond:* BJS anticipates 57 respondents to NCRP for report year 2012: 50 state respondents; the California Juvenile Justice Division; and in six states, separate state parole departments respond to the NCRP–1C request. Each respondent currently submitting NCRP data will require an estimated 28 hours of time to supply the information for their annual caseload and an additional 3 hours documenting or explaining the data for a total of 1,200 hours. For the 14 states which have never submitted data or are returning to NCRP submission following a lapse of several years, the total first year's burden

estimate is 930 hours, which includes the time required for developing or modifying computer programs to extract the data, performing and checking the extracted data, and submitting it electronically to BJS' data collection agency via SFTP. The total burden for all 57 NCRP data providers is 2,121 hours for report year 2012. Starting with report year 2013, this burden will decrease to 1,326 hours since all states will have data extract programs created and need only make minor modifications to obtain report year 2013 data. All states submit data via a secure file transfer protocol (SFTP) electronic upload.

(6) *An estimate of the total public burden (in hours) associated with the collection:* There are an estimated 2,121 total burden hours associated with this collection for report year 2012. Starting in report year 2013, the total estimated burden will be 1,326 hours.

If additional information is required contact: Jerri Murray, Department Clearance Officer, United States Department of Justice, Justice Management Division, Policy and Planning Staff, Two Constitution Square, 145 N Street NE., Room 2E–508, Washington, DC 20530.

Dated: August 21, 2012.

Jerri Murray,

Department Clearance Officer, PRA, U.S. Department of Justice.

[FR Doc. 2012–20857 Filed 8–23–12; 8:45 am]

BILLING CODE 4410–18–P

DEPARTMENT OF LABOR

Advisory Committee on Veterans' Employment, Training and Employer Outreach (ACVETEO): Meeting

AGENCY: Veterans' Employment and Training Service, Labor.

ACTION: Notice of Open Meeting.

SUMMARY: This notice sets forth the schedule and proposed agenda of a forthcoming meeting of the Advisory Committee on Veterans' Employment, Training and Employer Outreach (ACVETEO). The ACVETEO will discuss Department of Labor's Veterans Employment and Training Services' (VETS) core programs and new initiatives regarding efforts that assist veterans seeking employment and raise employer awareness as to the advantages of hiring veterans. There will be an opportunity for persons or organizations to address the committee. Any individual or organization that wishes to do so should contact Mr. Gregory Green (202) 693–4734. Time constraints may limit the number of outside participants/presentations.

Individuals who will need accommodations for a disability in order to attend the meeting (i.e., interpreting services, assistive listening devices, and/or materials in alternative format) should notify the Advisory Committee no later than Wednesday, September 12, 2012 by contacting Mr. Gregory Green (202) 693–4734. Requests made after this date will be reviewed, but availability of the requested accommodations cannot be guaranteed. The meeting site is accessible to individuals with disabilities. This notice also describes the functions of the Advisory Committee. Notice of this meeting is required under Section 10(a)(2) of the Federal Advisory Committee Act. This document is intended to notify the general public. The Designated Federal Official is Areon Kelvington.

DATES: *Date and Time:* Thursday, September 19, 2012, beginning at 10:00 a.m. and ending at approximately 4:30 p.m. (E.S.T.).

ADDRESSES: Department of Labor, 200 Constitution Ave. NW., Room N5437A&B, Washington, DC 20210. ID is required to enter the building.

FOR FURTHER INFORMATION CONTACT: Mr. Gregory Green, Special Assistant to the Designated Federal Official, Advisory Committee on Veterans' Employment, Training and Employer Outreach. (202) 693–4734.

SUPPLEMENTARY INFORMATION: ACVETEO is a Congressionally mandated Advisory Committee authorized under Title 38, U.S. Code, Section 4110 and subject to the Federal Advisory Committee Act (FACA), 5 U.S.C. App. 2, as amended. The ACVETEO is responsible for: Assessing employment and training needs of Veterans; determining the extent to which the programs and activities of the U.S. Department of Labor meet these needs; assisting to conduct outreach to employers seeking to hire Veterans; making recommendations to the Secretary, through the Assistant Secretary of Labor for Veterans' Employment and Training, with respect to outreach activities and employment and training needs of Veterans; and carrying out such other activities necessary to make required reports and recommendations. ACVETEO meets at least quarterly.

Signed in Washington, DC, this 17th day of August 2012.

John K. Moran,

Deputy Assistant Secretary, Veterans' Employment and Training Service.

[FR Doc. 2012–20871 Filed 8–23–12; 8:45 am]

BILLING CODE 4510–79–P

NATIONAL FOUNDATION ON THE ARTS AND THE HUMANITIES

Meetings of Humanities Panel; Correction

AGENCY: National Endowment for the Humanities, National Foundation on the Arts and the Humanities.

ACTION: Notice of meetings; correction.

SUMMARY: The National Endowment for the Humanities published a document in the **Federal Register** of August 14, 2012, concerning notice of meetings of the Humanities Panel during the month of September 2012. Two of the meetings have been cancelled and rescheduled as one meeting. All other information in the notice remains the same.

FOR FURTHER INFORMATION CONTACT: Lisette Voyatzis, Committee Management Officer, at (202) 606–8322.

Correction

In the **Federal Register** of August 14, 2012, in FR Doc. 2012–19899, on page 48553, in the first and second columns, remove items 9 and 10 and replace with:

9. *Date:* September 24, 2012.
Time: 8:30 a.m. to 5:00 p.m.
Room: 315. This meeting will discuss applications for the Bridging Cultures at Community Colleges: Request for Proposals for a Cooperative Agreement program, submitted to the Division of Education Programs.

Dated: August 20, 2012.

Lisette Voyatzis,

Committee Management Officer.

[FR Doc. 2012–20874 Filed 8–23–12; 8:45 am]

BILLING CODE 7536–01–P

NUCLEAR REGULATORY COMMISSION

Application for a License To Export High-Enriched Uranium

Pursuant to 10 CFR 110.70 (b) ''Public Notice of Receipt of an Application,'' please take notice that the Nuclear Regulatory Commission (NRC) has received the following request for an export license. Copies of the request are available electronically through ADAMS and can be accessed through the Public Electronic Reading Room (PERR) link

http://www.nrc.gov/reading-rm.html at the NRC Homepage.

A request for a hearing or petition for leave to intervene may be filed within thirty days after publication of this notice in the **Federal Register**. Any request for hearing or petition for leave to intervene shall be served by the requestor or petitioner upon the applicant, the office of the General Counsel, U.S. Nuclear Regulatory Commission, Washington, DC 20555; the Secretary, U.S. Nuclear Regulatory Commission, Washington, DC 20555; and the Executive Secretary, U.S. Department of State, Washington, DC 20520.

A request for a hearing or petition for leave to intervene may be filed with the NRC electronically in accordance with NRC's E-Filing rule promulgated in August 2007, 72 Fed. Reg 49139 (Aug. 28, 2007). Information about filing electronically is available on the NRC's public Web site at *http://www.nrc.gov/site-help/e-submittals.html*. To ensure timely electronic filing, at least 5 (five) days prior to the filing deadline, the petitioner/requestor should contact the Office of the Secretary by email at *HEARINGDOCKET@NRC.GOV,* or by calling (301) 415–1677, to request a digital ID certificate and allow for the creation of an electronic docket.

In addition to a request for hearing or petition for leave to intervene, written comments, in accordance with 10 CFR 110.81, should be submitted within thirty (30) days after publication of this notice in the **Federal Register** to Office of the Secretary, U.S. Nuclear Regulatory Commission, Washington, DC 20555, Attention: Rulemaking and Adjudications.

The information concerning this application for an export license follows.

NRC EXPORT LICENSE APPLICATION

[Description of material]

Name of applicant, date of application, date received, application No., docket No.	Material type	Total quantity	End use	Destination
DOE/NNSA—Y–12 National Security Complex, July 30, 2012, August 1, 2012, XSNM3726, 11006037.	High-Enriched Uranium (93.35%).	7.0 kilograms uranium-235 contained in 7.5 kilograms uranium.	For the export of high-enriched uranium in the form of broken metal to the Atomic Energy of Canada Limited (AECL) laboratories in Canada, for the production of targets for the use in medical isotopes production.	Canada.

For the Nuclear Regulatory Commission.

Dated this 20th day of August 2012 at Rockville, Maryland.

Mark R. Shaffer,

Deputy Director, Office of International Programs.

[FR Doc. 2012–20912 Filed 8–23–12; 8:45 am]

BILLING CODE 7590–01–P

NUCLEAR REGULATORY COMMISSION

Advisory Committee on Reactor Safeguards; Notice of Meeting

In accordance with the purposes of Sections 29 and 182b of the Atomic Energy Act (42 U.S.C. 2039, 2232b), the Advisory Committee on Reactor Safeguards (ACRS) will hold a meeting on September 6–8, 2012, 11545 Rockville Pike, Rockville, Maryland.

Thursday, September 6, 2012, Conference Room T2–B1, 11545 Rockville Pike, Rockville, Maryland

8:30 a.m.–8:35 a.m.: Opening Remarks by the ACRS Chairman (Open)—The ACRS Chairman will make opening remarks regarding the conduct of the meeting.

8:35 a.m.–10 a.m.: Draft Regulatory Guide 1290 (Proposed Revision to Regulatory Guide (RG) 1.59), ''Design-Basis Floods for Nuclear Power Plants'' (Open)—The Committee will hear presentations by and hold discussions with representatives of the NRC staff regarding a proposed revision to RG–1.59, ''Design-Basis Floods for Nuclear Power Plants.''

10:15 a.m.–12:15 p.m.: Interim Staff Guidance 8 (ISG–8), Revision 3, ''Burnup Credit in the Criticality Safety Analyses of PWR Spent Fuel in Transport and Storage Casks'' (Open)—The Committee will hear presentations by and hold discussions with representatives of the NRC staff regarding ISG–8, Revision 3, ''Burnup Credit in the Criticality Safety Analyses of PWR Spent Fuel in Transport and Storage Casks.''

1:15 p.m.–3:15 p.m.: Selected Chapters of the Safety Evaluation Reports (SERs) with Open Items Associated with the US Advanced Pressurized Water Reactor (US–APWR) Design Certification and the Comanche Peak Combined License Application (COLA) (Open/Closed)—The Committee will hear presentations by and hold discussions with representatives of the NRC staff, Mitsubishi Heavy Industries and Luminant Generation Company regarding selected chapters of the SERs with Open Items associated with the US–APWR Design Certification and the Comanche Peak COLA. [**Note:** A portion of this session may be closed in order to discuss and protect information designated as proprietary, pursuant to 5 U.S.C 552b(c)(4)]

3:30 p.m.–4:30 p.m.: Assessment of the Quality of Selected NRC Research Projects (Open)—The Members of the ACRS panels will hold discussions on the quality assessment of the following NRC research projects: (1) NUREG–1953, ''Confirmatory Thermal-Hydraulic Analysis to Support Specific Success Criteria in the Standardized Plant Analysis Risk Models-Surry and Peach Bottom,'' and (2) NUREG/CR–7040, ''Evaluation of JNES Equipment Fragility Tests for Use in Seismic Probabilistic Risk Assessments for U.S. Nuclear Power Plants.''

4:45 p.m.–7 p.m.: Preparation of ACRS Reports (Open/Closed)—The Committee will discuss proposed ACRS reports on matters discussed during this meeting. The Committee will also discuss a proposed ACRS report on the Technical Basis for Regulating Extended Storage and Transportation of Spent Nuclear Fuel. [**Note:** A portion of this session may be closed in order to discuss and protect information designated as proprietary, pursuant to 5 U.S.C 552b(c)(4)]

Friday, September 7, 2012, Conference Room T2–B1, 11545 Rockville Pike, Rockville, Maryland

8:30 a.m.–8:35 a.m.: Opening Remarks by the ACRS Chairman (Open)—The ACRS Chairman will make opening remarks regarding the conduct of the meeting.

8:35 a.m.–9 a.m.: Meeting with the NRC Chairman (Open)—The Committee will hold discussions with the NRC Chairman to discuss items of mutual interest.

9:15 a.m.–10:45 a.m.: Future ACRS Activities/Report of the Planning and Procedures Subcommittee (Open/Closed)—The Committee will discuss the recommendations of the Planning and Procedures Subcommittee regarding items proposed for consideration by the Full Committee during future ACRS Meetings, and matters related to the conduct of ACRS business, including anticipated workload and member assignments. [**Note:** A portion of this meeting may be closed pursuant to 5 U.S.C. 552b(c)(2) and (6) to discuss organizational and personnel matters that relate solely to internal personnel rules and practices of ACRS, and information the release of which would constitute a clearly unwarranted invasion of personal privacy.]

10:45 a.m.–11 a.m.: Reconciliation of ACRS Comments and Recommendations (Open)—The Committee will discuss the responses from the NRC Executive Director for Operations to comments and recommendations included in recent ACRS reports and letters.

11 a.m.–12 p.m.: Significant Operating Experience (Open)—The Committee will hear a report and hold discussions with the Chairman of the ACRS Subcommittee on Plant Operations and Fire Protection regarding significant operating experience, insights gained from these events, and any follow-up actions by the Subcommittee and/or the Full Committee.

1 p.m.–7 p.m.: Preparation of ACRS Reports (Open/Closed)—The Committee will continue its discussion on proposed ACRS reports on matters discussed during this meeting. [**Note:** A portion of this session may be closed in order to discuss and protect information designated as proprietary, pursuant to 5 U.S.C 552b(c)(4)]

Saturday, September 8, 2012, Conference Room T2–B1, 11545 Rockville Pike, Rockville, Maryland

8:30 a.m.–11:30 a.m.: Preparation of ACRS Reports (Open/Closed)—The Committee will continue its discussion of proposed ACRS reports. [**Note:** A portion of this session may be closed in order to discuss and protect information designated as proprietary, pursuant to 5 U.S.C 552b(c)(4)]

11:30 a.m.–12 p.m.: Miscellaneous (Open)—The Committee will discuss matters related to the conduct of Committee activities and specific issues that were not completed during previous meetings.

Procedures for the conduct of and participation in ACRS meetings were published in the **Federal Register** on October 17, 2011, (76 FR 64126–64127). In accordance with those procedures, oral or written views may be presented by members of the public, including representatives of the nuclear industry. Persons desiring to make oral statements should notify Antonio Dias, Cognizant ACRS Staff (Telephone: 301–415–6805, Email: *Antonio.Dias@nrc.gov*), five days before the meeting, if possible, so that appropriate arrangements can be made to allow necessary time during the meeting for such statements. In view of the possibility that the schedule for ACRS meetings may be adjusted by the Chairman as necessary to facilitate the conduct of the meeting, persons planning to attend should check with the Cognizant ACRS staff if such rescheduling would result in major inconvenience.

Thirty-five hard copies of each presentation or handout should be provided 30 minutes before the meeting. In addition, one electronic copy of each presentation should be emailed to the Cognizant ACRS Staff one day before meeting. If an electronic copy cannot be provided within this timeframe, presenters should provide the Cognizant ACRS Staff with a CD containing each presentation at least 30 minutes before the meeting.

In accordance with Subsection 10(d) Public Law 92–463, and 5 U.S.C. 552b(c), certain portions of this meeting may be closed, as specifically noted above. Use of still, motion picture, and television cameras during the meeting may be limited to selected portions of the meeting as determined by the Chairman. Electronic recordings will be permitted only during the open portions of the meeting.

ACRS meeting agenda, meeting transcripts, and letter reports are available through the NRC Public Document Room at *pdr.resource@nrc.gov,* or by calling the PDR at 1–800–397–4209, or from the Publicly Available Records System (PARS) component of NRC's document system (ADAMS) which is accessible from the NRC Web site at *http://www.nrc.gov/reading-rm/adams.html* or *http://www.nrc.gov/reading-rm/doc-collections/ACRS/.*

Video teleconferencing service is available for observing open sessions of ACRS meetings. Those wishing to use this service should contact Mr. Theron Brown, ACRS Audio Visual Technician (301–415–8066), between 7:30 a.m. and 3:45 p.m. (ET), at least 10 days before the meeting to ensure the availability of this service. Individuals or organizations requesting this service will be responsible for telephone line charges and for providing the equipment and facilities that they use to establish the video teleconferencing link. The availability of video teleconferencing services is not guaranteed.

Dated: August 21, 2012.

Andrew L. Bates,

Advisory Committee Management Officer.

[FR Doc. 2012–20928 Filed 8–23–12; 8:45 am]

BILLING CODE 7590–01–P

NUCLEAR REGULATORY COMMISSION

Request for a License To Export Nuclear Grade Graphite

Pursuant to 10 CFR 110.70 (b) ''Public Notice of Receipt of an Application,'' please take notice that the Nuclear Regulatory Commission (NRC) has received the following request for an export license. Copies of the request are available electronically through ADAMS and can be accessed through the Public Electronic Reading Room (PERR) link *http://www.nrc.gov/reading-rm.html* at the NRC Homepage.

A request for a hearing or petition for leave to intervene may be filed within thirty days after publication of this notice in the **Federal Register**. Any request for hearing or petition for leave to intervene shall be served by the requestor or petitioner upon the applicant, the office of the General Counsel, U.S. Nuclear Regulatory Commission, Washington, DC 20555; the Secretary, U.S. Nuclear Regulatory Commission, Washington, DC 20555; and the Executive Secretary, U.S. Department of State, Washington, DC 20520.

A request for a hearing or petition for leave to intervene may be filed with the NRC electronically in accordance with NRC's E-Filing rule promulgated in August 2007, 72 FR 49139 (Aug. 28, 2007). Information about filing electronically is available on the NRC's public Web site at *http://www.rnc.gov/site-help/e-submittals.html.* To ensure timely electronic filing, at least 5 (five) days prior to the filing deadline, the petitioner/requestor should contact the Office of the Secretary by email at *HEARINGDOCKET@NRC.GOV,* or by calling (301) 415–1677, to request a digital ID certificate and allow for the creation of an electronic docket.

In addition to a request for hearing or petition for leave to intervene, written comments, in accordance with 10 CFR

110.81, should be submitted within thirty (30) days after publication of this notice in the **Federal Register** to Office of the Secretary, U.S. Nuclear Regulatory Commission, Washington, DC 20555, Attention: Rulemaking and Adjudications

The information concerning this export license application follows.

NRC EXPORT LICENSE APPLICATION

[Description of material]

Name of applicant, date of application, date received, application No., docket No.	Material type	Total quantity	End use	Recipient country
GrafTech International Inc., June 26, 2012, June 27, 2012, XMAT424, 11006032.	Nuclear grade graphite for nuclear end use.	40,000.0 kilograms of nuclear grade graphite.	Nuclear grade graphite to the Shanghai Institute of Applied Physics in China to test various types of nuclear grade graphite material in a molten salt type nuclear reactor.	China.

For The Nuclear Regulatory Commission.

Dated this 20th day of August 2012 in Rockville, Maryland.

Mark R. Shaffer,

Deputy Director, Office of International Programs.

[FR Doc. 2012–20922 Filed 8–23–12; 8:45 am]

BILLING CODE 7590–01–P

PENSION BENEFIT GUARANTY CORPORATION

Submission of Information Collection for OMB Review; Comment Request; Qualified Domestic Relations Orders Submitted to PBGC

AGENCY: Pension Benefit Guaranty Corporation.

ACTION: Notice of request for extension of OMB approval.

SUMMARY: Pension Benefit Guaranty Corporation (''PBGC'') is requesting that the Office of Management and Budget (''OMB'') extend approval, under the Paperwork Reduction Act, of the collection of information in PBGC's booklet *Qualified Domestic Relations Orders & PBGC* (OMB control number 1212–0054; expires August 31, 2012). This notice informs the public of PBGC's request and solicits public comment on the collection of information.

DATES: Comments should be submitted by September 24, 2012.

ADDRESSES: Comments should be sent to the Office of Information and Regulatory Affairs, Office of Management and Budget, Attention: Desk Officer for Pension Benefit Guaranty Corporation, via electronic mail at *OIRA_DOCKET@omb.eop.gov* or by fax to (202) 395–6974.

A copy of PBGC's request may be obtained without charge by writing to the Disclosure Division of the Office of the General Counsel of PBGC at the above address or by visiting that office or calling (202) 326–4040 during normal business hours. (TTY and TDD users may call the Federal relay service toll free at 1–800–877–8339 and ask to be connected to (202) 326–4040.) The request is also available at *www.reginfo.gov*. PBGC's current QDRO booklet is available on PBGC's Web site at *www.pbgc.gov*.

FOR FURTHER INFORMATION CONTACT: Jo Amato Burns, Attorney, Legislative and Regulatory Department, Pension Benefit Guaranty Corporation, 1200 K Street NW., Washington, DC 20005–4026, 202–326–4024. (TTY and TDD users may call the Federal relay service toll-free at 1–800–877–8339 and ask to be connected to 202–326–4024.)

SUPPLEMENTARY INFORMATION: PBGC is requesting that OMB extend its approval of the guidance and model language and forms contained in the PBGC booklet, *Qualified Domestic Relations Orders & PBGC.*

A defined benefit pension plan that does not have enough money to pay benefits may be terminated if the employer responsible for the plan faces severe financial difficulty, such as bankruptcy, and is unable to maintain the plan. In such an event, PBGC becomes trustee of the plan and pays benefits, subject to legal limits, to plan participants and beneficiaries.

The benefits of a pension plan participant generally may not be assigned or alienated. However, Title I of ERISA provides an exception for domestic relations orders that relate to child support, alimony payments, or the marital property rights of an alternate payee (a spouse, former spouse, child, or other dependent of a plan participant). The exception applies only if the domestic relations order meets specific legal requirements that make it a qualified domestic relations order, or ''QDRO.''

ERISA provides that pension plans are required to comply with only those domestic relations orders which are QDROs, and that the decision as to whether a domestic relations order is a QDRO is made by the plan administrator. When PBGC is trustee of a plan, it reviews submitted domestic relations orders to determine whether the order is qualified before paying benefits to an alternate payee. The requirements for submitting a QDRO are established by statute.

To simplify the process, PBGC has included model QDROs and accompanying guidance in a booklet, *Qualified Domestic Relations Orders & PBGC.* The models and guidance assist parties by making it easier to comply with ERISA's QDRO requirements when drafting orders for plans trusteed by PBGC. The booklet does not create any additional requirements.

PBGC is making the following changes to the QDRO booklet:

- For a participant who is already in pay status, PBGC will not suspend benefits upon receipt of a draft domestic relations order or any pleading intended to add PBGC as a party to a domestic relations action, including a request for joinder. PBGC will suspend benefits only upon receipt of an original signed domestic relations order or a certified or authenticated copy.
- For a participant who is not in pay status, but whose application is pending, PBGC will place a hold on putting the participant in pay status's application for benefits upon receipt of a draft order or any pleading intended to add PBGC as a party to a domestic relations action, including a request for joinder.
- If a separate interest order is silent as to what happens if an alternate payee dies before commencing benefits, PBGC will treat the separate interest as reverting to the participant, not being forfeited to PBGC.

PBGC is also making other simplifying and clarifying changes to the QDRO booklet.

The collection of information has been approved through August 31, 2012, by OMB under control number 1212–0054. PBGC is requesting that OMB extend approval of the collection of information for three years. An agency

may not conduct or sponsor, and a person is not required to respond to, a collection of information unless it displays a currently valid OMB control number.

PBGC estimates that it will receive 1,361 domestic relations orders annually and that the average annual burden of this collection of information is 4,138 hours and $870,400.

Issued in Washington, DC, this 21st day of August 2012.

Catherine B. Klion,

Manager, Regulatory and Policy Division, Legislative and Regulatory Department.

[FR Doc. 2012–20891 Filed 8–23–12; 8:45 am]

BILLING CODE 7709–01–P

POSTAL REGULATORY COMMISSION

[Docket Nos. MC2012–45 and CP2012–53; Order No. 1443]

New Postal Product

AGENCY: Postal Regulatory Commission.

ACTION: Notice.

SUMMARY: The Commission is noticing a recently-filed Postal Service request to add First-Class Package Service Contract 15 to the competitive product list. This notice addresses procedural steps associated with this filing.

DATES: *Comments are due:* August 28, 2012.

ADDRESSES: Submit comments electronically via the Commission's Filing Online system at *http:www.prc.gov.* Commenters who cannot submit their views electronically should contact the person identified in the **FOR FURTHER INFORMATION CONTACT** portion of the preamble for advice on alternatives to electronic filing.

FOR FURTHER INFORMATION CONTACT: Stephen L. Sharfman, General Counsel, at 202–789–6824.

SUPPLEMENTARY INFORMATION:

Table of Contents

I. Introduction
II. Notice of Filings
III. Ordering Paragraphs

I. Introduction

In accordance with 39 U.S.C. 3642 and 39 CFR 3020.30 *et seq.,* the Postal Service filed a formal request and associated supporting information to add First-Class Package Service Contract 15 to the competitive product list.[1] The Postal Service asserts that First-Class Package Service Contract 15 is a competitive product ''not of general applicability'' within the meaning of 39 U.S.C. 3632(b)(3). Request at 1. The Request has been assigned Docket No. MC2012–45.

The Postal Service contemporaneously filed a redacted contract related to the proposed new product under 39 U.S.C. 3632(b)(3) and 39 CFR 3015.5. *Id.* Attachment B. The instant contract has been assigned Docket No. CP2012–53.

Request. To support its Request, the Postal Service filed six attachments as follows:

- Attachment A—a redacted copy of Governors' Decision No. 11–6, authorizing the new product;
- Attachment B—a redacted copy of the contract;
- Attachment C—proposed changes to the Mail Classification Schedule competitive product list with the addition underlined;
- Attachment D—a Statement of Supporting Justification as required by 39 CFR 3020.32;
- Attachment E—a certification of compliance with 39 U.S.C. 3633(a); and
- Attachment F—an application for non-public treatment of materials to maintain redacted portions of the contract and related financial information under seal.

In the Statement of Supporting Justification, Dennis R. Nicoski, Manager, Field Sales Strategy and Contracts, asserts that the contract will cover its attributable costs, make a positive contribution to covering institutional costs, and increase contribution toward the requisite 5.5 percent of the Postal Service's total institutional costs. *Id.* Attachment D at 1. Mr. Nicoski contends that there will be no issue of market dominant products subsidizing competitive products as a result of this contract. *Id.*

Related contract. The Postal Service included a redacted version of the related contract with the Request. *Id.* Attachment B. The contract is scheduled to become effective on the date that the Commission issues all regulatory approval. *Id.* at 2. The contract will expire 3 years from the effective date unless, among other things, either party terminates the agreement upon 30 days' written notice to the other party. *Id.* The Postal Service represents that the contract is consistent with 39 U.S.C. 3633(a). *Id.* Attachment D.

The Postal Service filed much of the supporting materials, including the related contract, under seal. *Id.* Attachment F. It maintains that the redacted portions of the contract, customer-identifying information, and related financial information should remain confidential. *Id.* at 3. This information includes the price structure, underlying costs and assumptions, pricing formulas, information relevant to the customer's mailing profile, and cost coverage projections. *Id.* The Postal Service asks the Commission to protect customer-identifying information from public disclosure indefinitely. *Id.* at 7.

II. Notice of Filings

The Commission establishes Docket Nos. MC2012–45 and CP2012–53 to consider the Request pertaining to the proposed First-Class Package Service Contract 15 product and the related contract, respectively.

Interested persons may submit comments on whether the Postal Service's filings in the captioned dockets are consistent with the policies of 39 U.S.C. 3632, 3633, or 3642, 39 CFR 3015.5, and 39 CFR part 3020, subpart B. Comments are due no later than August 28, 2012. The public portions of these filings can be accessed via the Commission's Web site (*http://www.prc.gov*).

The Commission appoints Natalie Rea Ward to serve as Public Representative in these dockets.

III. It is ordered

It is ordered:

1. The Commission establishes Docket Nos. MC2012–45 and CP2012–53 to consider the matters raised in each docket.
2. Pursuant to 39 U.S.C. 505, Natalie Rea Ward is appointed to serve as an officer of the Commission (Public Representative) to represent the interests of the general public in these proceedings.
3. Comments by interested persons in these proceedings are due no later than August 28, 2012.
4. The Secretary shall arrange for publication of this order in the **Federal Register**.

By the Commission.

Shoshana M. Grove,

Secretary.

[FR Doc. 2012–20852 Filed 8–23–12; 8:45 am]

BILLING CODE 7710–FW–P

POSTAL SERVICE

Product Change—First-Class Package Service Negotiated Service Agreement

AGENCY: Postal Service™.

ACTION: Notice.

[1] Request of the United States Postal Service to Add First-Class Package Service Contract 15 to Competitive Product List and Notice of Filing (Under Seal) of Unredacted Governors' Decision, Contract, and Supporting Data, August 17, 2012 (Request).

SUMMARY: The Postal Service gives notice of filing a request with the Postal Regulatory Commission to add a domestic shipping services contract to the list of Negotiated Service Agreements in the Mail Classification Schedule's Competitive Products List.

DATES: *Effective Date:* August 24, 2012.

FOR FURTHER INFORMATION CONTACT: Elizabeth A. Reed, 202–268–3179.

SUPPLEMENTARY INFORMATION: The United States Postal Service® hereby gives notice that, pursuant to 39 U.S.C. 3642 and 3632(b)(3), on August 17, 2012, it filed with the Postal Regulatory Commission a *Request of the United States Postal Service to Add First-Class Package Service Contract 15 to Competitive Product List.* Documents are available at *www.prc.gov*, Docket Nos. MC2012–45, CP2012–53.

Stanley F. Mires,

Attorney, Legal Policy & Legislative Advice.

[FR Doc. 2012–20800 Filed 8–23–12; 8:45 am]

BILLING CODE 7710–12–P

SECURITIES AND EXCHANGE COMMISSION

Submission for OMB Review; Comment Request

Upon Written Request, Copies Available From: Securities and Exchange Commission, Office of Investor Education and Advocacy, Washington, DC 20549–0213.

Extension:

Rule 10f–3; SEC File No. 270–237; OMB Control No. 3235–0226.

Notice is hereby given that, pursuant to the Paperwork Reduction Act of 1995 (44 U.S.C. 3501–3520), the Securities and Exchange Commission (''Commission'') has submitted to the Office of Management and Budget a request for extension and approval of the collections of information discussed below.

Section 10(f) of the Investment Company Act of 1940 (15 U.S.C. 80a) (the ''Act'') prohibits a registered investment company (''fund'') from purchasing any security during an underwriting or selling syndicate if the fund has certain relationships with a principal underwriter for the security. Congress enacted this provision in 1940 to protect funds and their shareholders by preventing underwriters from ''dumping'' unmarketable securities on affiliated funds.

Rule 10f–3 (17 CFR 270.10f–3) permits a fund to engage in a securities transaction that otherwise would violate section 10(f) if, among other things: (i) Each transaction effected under the rule is reported on Form N–SAR; (ii) the fund's directors have approved procedures for purchases made in reliance on the rule, regularly review fund purchases to determine whether they comply with these procedures, and approve necessary changes to the procedures; and (iii) a written record of each transaction effected under the rule is maintained for six years, the first two of which in an easily accessible place. The written record must state: (i) From whom the securities were acquired; (ii) the identity of the underwriting syndicate's members; (iii) the terms of the transactions; and (iv) the information or materials on which the fund's board of directors has determined that the purchases were made in compliance with procedures established by the board.

The rule also conditionally allows managed portions of fund portfolios to purchase securities offered in otherwise off-limits primary offerings. To qualify for this exemption, rule 10f–3 requires that the subadviser that is advising the purchaser be contractually prohibited from providing investment advice to any other portion of the fund's portfolio and consulting with any other of the fund's advisers that is a principal underwriter or affiliated person of a principal underwriter concerning the fund's securities transactions.

These requirements provide a mechanism for fund boards to oversee compliance with the rule. The required recordkeeping facilitates the Commission staff's review of rule 10f–3 transactions during routine fund inspections and, when necessary, in connection with enforcement actions.

The staff estimates that approximately 300 funds engage in a total of approximately 3,700 rule 10f–3 transactions each year.[1] Rule 10f–3 requires that the purchasing fund create a written record of each transaction that includes, among other things, from whom the securities were purchased and the terms of the transaction. The staff estimates[2] that it takes an average fund approximately 30 minutes per transaction and approximately 1,850 hours[3] in the aggregate to comply with this portion of the rule.

The funds also must maintain and preserve these transactional records in accordance with the rule's recordkeeping requirement, and the staff estimates that it takes a fund approximately 20 minutes per transaction and that annually, in the aggregate, funds spend approximately 1,233 hours[4] to comply with this portion of the rule.

In addition, fund boards must, no less than quarterly, examine each of these transactions to ensure that they comply with the fund's policies and procedures. The information or materials upon which the board relied to come to this determination also must be maintained and the staff estimates that it takes a fund 1 hour per quarter and, in the aggregate, approximately 1,200 hours[5] annually to comply with this rule requirement.

The staff estimates that reviewing and revising as needed written procedures for rule 10f–3 transactions takes, on average for each fund, two hours of a compliance attorney's time per year.[6] Thus, annually, in the aggregate, the staff estimates that funds spend a total of approximately 600 hours[7] on monitoring and revising rule 10f–3 procedures. Based on an analysis of fund filings, the staff estimates that approximately 775 fund portfolios enter into subadvisory agreements each year.[8] Based on discussions with industry representatives, the staff estimates that it will require approximately 3 attorney hours to draft and execute additional clauses in new subadvisory contracts in order for funds and subadvisers to be able to rely on the exemptions in rule 10f–3. Because these additional clauses are identical to the clauses that a fund would need to insert in their subadvisory contracts to rely on rules 12d3–1, 17a–10, and 17e–1, and because we believe that funds that use one such rule generally use all of these rules, we apportion this 3 hour time burden equally to all four rules. Therefore, we estimate that the burden allocated to rule 10f–3 for this contract change would be 0.75 hours.[9] Assuming that all 775 funds that enter into new subadvisory contracts each year make

[1] These estimates are based on staff extrapolations from filings with the Commission.

[2] Unless stated otherwise, the information collection burden estimates are based on conversations between the staff and representatives of funds.

[3] This estimate is based on the following calculation: (0.5 hours × 3,700 = 1,850 hours).

[4] This estimate is based on the following calculations: (20 minutes × 3,700 transactions = 74,000 minutes; 74,000 minutes/60 = 1,233 hours).

[5] This estimate is based on the following calculation: (1 hour per quarter × 4 quarters × 300 funds = 1,200 hours).

[6] These averages take into account the fact that in most years, fund attorneys and boards spend little or no time modifying procedures and in other years, they spend significant time doing so.

[7] This estimate is based on the following calculation: (300 funds × 2 hours = 600 hours).

[8] Based on information in Commission filings, we estimate that 44.4 percent of funds are advised by subadvisers.

[9] This estimate is based on the following calculation (3 hours ÷ 4 rules = .75 hours).

the modification to their contract required by the rule, we estimate that the rule's contract modification requirement will result in 581 burden hours annually.[10]

The staff estimates, therefore, that rule 10f–3 imposes an information collection burden of 5,665 hours.[11] This estimate does not include the time spent filing transaction reports on Form N–SAR, which is encompassed in the information collection burden estimate for that form.

The collection of information required by rule 10f–3 is necessary to obtain the benefits of the rule. Responses will not be kept confidential. An agency may not conduct or sponsor, and a person is not required to respond to, a collection of information unless it displays a currently valid OMB control number.

The public may view the background documentation for this information collection at the following Web site, *www.reginfo.gov.* Comments should be directed to: (i) Desk Officer for the Securities and Exchange Commission, Office of Information and Regulatory Affairs, Office of Management and Budget, Room 10102, New Executive Office Building, Washington, DC 20503, or by sending an email to: *Shagufta_Ahmed@omb.eop.gov;* and (ii) Thomas Bayer, Director/Chief Information Officer, Securities and Exchange Commission, c/o Remi Pavlik-Simon, 6432 General Green Way, Alexandria, VA 22312 or send an email to: *PRA_Mailbox@sec.gov.* Comments must be submitted to OMB within 30 days of this notice.

Dated: August 20, 2012.

Elizabeth M. Murphy,

Secretary.

[FR Doc. 2012–20824 Filed 8–23–12; 8:45 am]

BILLING CODE 8011–01–P

SECURITIES AND EXCHANGE COMMISSION

Submission for OMB Review; Comment Request

Upon Written Request, Copies Available From: Securities and Exchange Commission, Office of Investor Education and Advocacy, Washington, DC 20549–0213.

Extension:

Rule 12b–1; SEC File No. 270–188; OMB Control No. 3235–0212.

Notice is hereby given that, pursuant to the Paperwork Reduction Act of 1995 (44 U.S.C. 3501 *et seq.*), the Securities and Exchange Commission (the ''Commission'') has submitted to the Office of Management and Budget a request for extension of the previously approved collection of information discussed below.

Rule 12b–1 under the Investment Company Act of 1940 (17 CFR 270.12b–1) permits a registered open-end investment company (''fund'' or ''mutual fund'') to bear expenses associated with the distribution of its shares, provided that the mutual fund complies with certain requirements, including, among other things, that it adopt a written plan (''rule 12b–1 plan'') and that it has in writing any agreements relating to the rule 12b–1 plan. The rule in part requires that (i) The adoption or material amendment of a rule 12b–1 plan be approved by the mutual fund's directors, including its independent directors, and, in certain circumstances, its shareholders; (ii) the board review quarterly reports of amounts spent under the rule 12b–1 plan; and (iii) the board, including the independent directors, consider continuation of the rule 12b–1 plan and any related agreements at least annually. Rule 12b–1 also requires mutual funds relying on the rule to preserve for six years, the first two years in an easily accessible place, copies of the rule 12b–1 plan and any related agreements and reports, as well as minutes of board meetings that describe the factors considered and the basis for adopting or continuing a rule 12b–1 plan.

Rule 12b–1 also prohibits funds from paying for distribution of fund shares with brokerage commissions on their portfolio transactions. The rule requires funds that use broker-dealers that sell their shares to also execute their portfolio securities transactions, to implement policies and procedures reasonably designed to prevent: (i) The persons responsible for selecting broker-dealers to effect transactions in fund portfolio securities from taking into account broker-dealers' promotional or sales efforts when making those decisions; and (ii) a fund, its adviser or principal underwriter, from entering into any agreement under which the fund directs brokerage transactions or revenue generated by those transactions to a broker-dealer to pay for distribution of the fund's (or any other fund's) shares.

The board and shareholder approval requirements of rule 12b–1 are designed to ensure that fund shareholders and directors receive adequate information to evaluate and approve a rule 12b–1 plan and, thus, are necessary for investor protection. The requirement of quarterly reporting to the board is designed to ensure that the rule 12b–1 plan continues to benefit the fund and its shareholders. The recordkeeping requirements of the rule are necessary to enable Commission staff to oversee compliance with the rule. The requirement that funds or their advisers implement, and fund boards approve, policies and procedures in order to prevent persons charged with allocating fund brokerage from taking distribution efforts into account is designed to ensure that funds' selection of brokers to effect portfolio securities transactions is not influenced by considerations about the sale of fund shares.

Based on information filed with the Commission by funds, Commission staff estimates that there are approximately 6,771 mutual fund portfolios that have at least one share class subject to a rule 12b–1 plan.[1] However, many of these portfolios are part of an affiliated group of funds, or mutual fund family, that is overseen by a common board of directors. Although the board must review and approve the rule 12b–1 plan for each fund separately, we have allocated the costs and hourly burden related to rule 12b–1 based on the number of fund families that have at least one fund that charges rule 12b–1 fees, rather than on the total number of mutual fund portfolios that individually have a rule 12b–1 plan.[2] Based on information filed with the Commission, the staff estimates that there are approximately 375 fund families with common boards of directors that have at least one fund with a rule 12b–1 plan.

Based on previous conversations with fund representatives, Commission staff estimates that for each of the 375 mutual fund families with a portfolio that has a rule 12b–1 plan, the average annual burden of complying with the rule is 425 hours. This estimate takes into account the time needed to prepare quarterly reports to the board of directors, the board's consideration of those reports, and the board's initial or

[10] These estimates are based on the following calculations: (0.75 hours × 775 portfolios = 581 burden hours).

[11] This estimate is based on the following calculation: (1,850 hours + 1,233 hours + 1,200 hours + 600 hours + 581 hours + 201 hours = 5,665 total burden hours).

[1] This estimate is based on information from the Commission's NSAR database.

[2] This allocation is based on previous conversations with fund representatives on how fund boards comply with the requirements of rule 12b–1. Despite this allocation of hourly burdens and costs, the number of annual responses each year will continue to depend on the number of fund portfolios with rule 12b–1 plans rather than the number of fund families with rule 12b–1 plans. The staff estimates that the number of annual responses per fund portfolio will be four per year (quarterly, with the annual reviews taking place at one of the quarterly intervals). Thus, we estimate that funds will make 27,084 responses (6,771 fund portfolios × 4 responses per fund portfolio = 27,084 responses) each year.

annual consideration of whether to continue the plan.[3] We therefore estimate that the total hourly burden per year for all funds to comply with current information collection requirements under rule 12b–1, is 159,375 hours (375 fund families × 425 hours per fund family = 159,375 hours).

If a currently operating fund seeks to (i) adopt a new rule 12b–1 plan or (ii) materially increase the amount it spends for distribution under its rule 12b–1 plan, rule 12b–1 requires that the fund obtain shareholder approval. As a consequence, the fund will incur the cost of a proxy.[4] Based on previous conversations with fund representatives, Commission staff estimates that approximately three funds per year prepare a proxy in connection with the adoption or material amendment of a rule 12b–1 plan. Funds typically hire outside legal counsel and proxy solicitation firms to prepare, print, and mail such proxies. The staff further estimates that the cost of each fund's proxy is $32,174. Thus the total annual cost burden of rule 12b–1 to the fund industry is $96,522 (3 funds requiring a proxy × $32,174 per proxy).

The estimate of average burden hours is made solely for the purposes of the Paperwork Reduction Act, and is not derived from a comprehensive or even a representative survey or study of the costs of Commission rules and forms.

The collections of information required by rule 12b–1 are necessary to obtain the benefits of the rule. Notices to the Commission will not be kept confidential. An agency may not conduct or sponsor, and a person is not required to respond to a collection of information unless it displays a currently valid control number.

The public may view the background documentation for this information collection at the following Web site, *www.reginfo.gov.* Comments should be directed to: (i) Desk Officer for the Securities and Exchange Commission, Office of Information and Regulatory Affairs, Office of Management and Budget, Room 10102, New Executive Office Building, Washington, DC 20503, or by sending an email to: *Shagufta_Ahmed@omb.eop.gov;* and (ii) Thomas Bayer, Director/Chief Information Officer, Securities and Exchange Commission, c/o Remi Pavlik-Simon, 6432 General Green Way, Alexandria, VA 22312 or send an email to: *PRA_Mailbox@sec.gov.* Comments must be submitted to OMB within 30 days of this notice.

Dated: August 20, 2012.

Elizabeth M. Murphy,

Secretary.

[FR Doc. 2012–20825 Filed 8–23–12; 8:45 am]

BILLING CODE 8011–01–P

[3] We do not estimate any costs or time burden related to the recordkeeping requirements in rule 12b–1, as funds are either required to maintain these records pursuant to other rules or would keep these records in any case as a matter of business practice.

[4] In general, a fund adopts a rule 12b–1 plan before it begins operations. Therefore, the fund is not required to obtain the approval of its public shareholders because the fund's shares have not yet been offered to the public.

SECURITIES AND EXCHANGE COMMISSION

Submission for OMB Review; Comment Request

Upon Written Request Copies Available From: Securities and Exchange Commission, Office of Investor Education and Advocacy, Washington, DC. 20549–0213.

Extension:

Rule 204; SEC File No. 270–586; OMB Control No. 3235–0647.

Notice is hereby given that pursuant to the Paperwork Reduction Act of 1995 (44 U.S.C. 3501 *et seq.*) (''PRA''), the Securities and Exchange Commission (''Commission'') has submitted to the Office of Management and Budget (''OMB'') a request for approval of extension of the previously approved collection of information provided for in Rule 204 (17 CFR 242.204) under the Securities Exchange Act of 1934 (15 U.S.C. 78a *et seq.*).

Rule 204 requires that, subject to certain limited exceptions, if a participant of a registered clearing agency has a fail to deliver position at a registered clearing agency it must immediately close out the fail to deliver position by purchasing or borrowing securities by no later than the beginning of regular trading hours on the settlement day following the day the participant incurred the fail to deliver position. Rule 204 is intended to help further the Commission's goal of reducing fails to deliver by maintaining the reductions in fails to deliver achieved by the adoption of temporary Rule 204T, as well as other actions taken by the Commission. In addition, Rule 204 is intended to help further the Commission's goal of addressing potentially abusive ''naked'' short selling in all equity securities.

The information collected under Rule 204 will continue to be retained and/or provided to other entities pursuant to the specific rule provisions and will be available to the Commission and self-regulatory organization (''SRO'') examiners upon request. The information collected will continue to aid the Commission and SROs in monitoring compliance with these requirements. In addition, the information collected will aid those subject to Rule 204 in complying with its requirements. These collections of information are mandatory.

Several provisions under Rule 204 will impose a ''collection of information'' within the meaning of the Paperwork Reduction Act.

I. Allocation Notification Requirement: As of December 31, 2011, there were 4,695 registered broker-dealers. Each of these broker-dealers could clear trades through a participant of a registered clearing agency and, therefore, become subject to the notification requirements of Rule 204(d). If a broker-dealer has been allocated a portion of a fail to deliver position in an equity security and after the beginning of regular trading hours on the applicable close-out date, the broker-dealer has to determine whether or not that portion of the fail to deliver position was not closed out in accordance with Rule 204(a), we estimate that a broker-dealer will have to make such determination with respect to approximately 2.09 equity securities per day.[1] We estimate a total of 2,472,762 notifications in accordance with Rule 204(d) across all broker-dealers (that were allocated responsibility to close out a fail to deliver position) per year (4,695 broker-dealers notifying participants once per day [2] on 2.09 securities, multiplied by 252 trading days in a year). The total estimated annual burden hours per year will be approximately 395,642 burden

[1] As stated in the adopting release for Interim Final Temporary Rule 204T, the Commission's Office of Economic Analysis (''OEA'') estimates that there are approximately 9,809 fail to deliver positions per settlement day. Across 4,695 broker-dealers, the number of securities per broker-dealer per day is approximately 2.09 equity securities. During the period from January to July 2008, approximately 4,321 new fail to deliver positions occurred per day. The National Securities Clearing Corporation (''NSCC'') data for this period includes only securities with at least 10,000 shares in fails to deliver. To account for securities with fails to deliver below 10,000 shares, the figure is multiplied by a factor of 2.27. The factor is estimated from a more complete data set obtained from NSCC during the period from September 16, 2008 to September 22, 2008. It should be noted that these numbers include securities that were not subject to the close-out requirement of Rule 203(b)(3) of Regulation SHO. Exchange Act Release No. 58733 (Oct. 14, 2008), 73 FR 61706, 61718 n.107 (Oct. 17, 2008) (''Rule 204T Adopting Release'').

[2] Because failure to comply with the close-out requirements of Rule 204(a) is a violation of the rule, we believe that a broker-dealer would make the notification to a participant that it is subject to the borrowing requirements of Rule 204(b) at most once per day.

hours (2,472,762 multiplied by 0.16 hours/notification).

II. Demonstration Requirement for Fails to Deliver on Long Sales: As of January 31, 2012, there were 191 participants of NSCC, the primary registered clearing agency responsible for clearing U.S. transactions that were registered as broker-dealers.[3] If a participant of a registered clearing agency has a fail to deliver position in an equity security at a registered clearing agency and determines that such fail to deliver position resulted from a long sale, we estimate that a participant of a registered clearing agency will have to make such determination with respect to approximately 35 securities per day.[4] We estimate a total of 1,684,620 demonstrations in accordance with Rule 204(a)(1) across all participants per year (191 participants checking for compliance once per day on 35 securities, multiplied by 252 trading days in a year). The total approximate estimated annual burden hour per year will be approximately 269,540 burden hours (1,684,620 multiplied by 0.16 hours/documentation).

III. Pre-Borrow Notification Requirement: As of January 31, 2012, there were 191 participants of NSCC, the primary registered clearing agency responsible for clearing U.S. transactions that were registered as broker-dealers.[5] If a participant of a registered clearing agency has a fail to deliver position in an equity security and after the beginning of regular trading hours on the applicable close-out date, the participant has to determine whether or not the fail to deliver position was closed out in accordance with Rule 204(a), we estimate that a participant of a registered clearing agency will have to make such determination with respect to approximately 51 equity securities per day.[6] We estimate a total of 2,454,732 notifications in accordance with Rule 204(c) across all participants per year (191 participants notifying broker-dealers once per day on 51 securities, multiplied by 252 trading days in a year). The total estimated annual burden hours per year will be approximately 392,758 burden hours (2,454,732 @ 0.16 hours/documentation).

IV. Certification Requirement: If the broker-dealer determines that it has not incurred a fail to deliver position on settlement date in an equity security for which the participant has a fail to deliver position at a registered clearing agency or has purchased securities in accordance with the conditions specified in Rule 204(e), we estimate that a broker-dealer will have to make such determinations with respect to approximately 2.09 securities per day. As of December 31, 2011, there were 4,695 registered broker-dealers. Each of these broker-dealers may clear trades through a participant of a registered clearing agency. We estimate that on average, a broker-dealer will have to certify to the participant that it has not incurred a fail to deliver position on settlement date in an equity security for which the participant has a fail to deliver position at a registered clearing agency or, alternatively, that it is in compliance with the requirements set forth in Rule 204(e), 2,472,762 times per year (4,695 broker-dealers certifying once per day on 2.09 securities, multiplied by 252 trading days in a year). The total approximate estimated annual burden hour per year will be approximately 395,642 burden hours (2,472,762 multiplied by 0.16 hours/certification).

V. Pre-Fail Credit Demonstration Requirement: If a broker-dealer purchases or borrows securities in accordance with the conditions specified in Rule 204(e) and determines that it has a net long position or net flat position on the settlement day on which the broker-dealer purchases or borrows securities we estimate that a broker-dealer will have to make such determination with respect to approximately 2.09 securities per day.[7] As of December 31, 2011, there were 4,695 registered broker-dealers. We estimate that on average, a broker-dealer will have to demonstrate in its books and records that it has a net long position or net flat position on the settlement day for which the broker-dealer is claiming credit, 2,472,762 times per year (4,695 broker-dealers checking for compliance once per day on 2.09 securities, multiplied by 252 trading days in a year). The total approximate estimated annual burden hour per year will be approximately 395,642 burden hours (2,472,762 multiplied by 0.16 hours/demonstration).

The total aggregate annual burden for the collection of information undertaken pursuant to all five provisions is thus 1,849,224 hours per year (395,642 + 269,540 + 392,758 + 395,642 + 395,642).

The Commission may not conduct or sponsor a collection of information unless it displays a currently valid OMB control number. No person shall be subject to any penalty for failing to comply with a collection of information subject to the PRA that does not display a valid OMB control number.

Background documentation for this information collection may be viewed at the following Web site: *www.reginfo.gov*. Comments should be directed to: (i) Desk Officer for the Securities and Exchange Commission, Office of Information and Regulatory Affairs, Office of Management and Budget, Room 10102, New Executive Office Building, Washington, DC 20503, or by sending an email to: *Shagufta_Ahmed@omb.eop.gov*; and (ii) Thomas Bayer, Director/Chief Information Officer, Securities and Exchange Commission, c/o Remi Pavlik-Simon, 6432 General Green Way, Alexandria, VA 22312 or send an email to: *PRA_Mailbox@sec.gov*. Comments must be submitted to OMB within 30 days of this notice.

Dated: August 20, 2012.

Elizabeth M. Murphy,

Secretary.

[FR Doc. 2012–20827 Filed 8–23–12; 8:45 am]

BILLING CODE 8011–01–P

[3] Those participants not registered as broker-dealers include such entities as banks, U.S.-registered exchanges, and clearing agencies. Although these entities are participants of a registered clearing agency, generally these entities do not engage in the types of activities that will implicate the close-out requirements of the rule. Such activities of these entities include creating and redeeming Exchange Traded Funds, trading in municipal securities, and using NSCC's Envelope Settlement Service or Inter-city Envelope Settlement Service. These activities rarely lead to fails to deliver and, if fails to deliver do occur, they are small in number and are usually closed out within a day.

[4] OEA estimates approximately 68% of trades are long sales and applies this percentage to the number of fail to deliver positions per day. OEA estimates that there are approximately 9,809 fail to deliver positions per settlement day. Across 191 broker-dealer participants of the NSCC, the number of securities per participant per day is approximately 51 equity securities. 68% of 51 securities per day is approximately 35 securities per day. The 68% figure is estimated as 100% minus the proportion of short sale trades found in the Regulation SHO Pilot Study. *See http://www.sec.gov/news/studies/2007/regshopilot020607.pdf.*

[5] *See supra* note 3.

[6] OEA estimates that there are approximately 9,809 fail to deliver positions per day. Across 191 broker-dealer participants of the NSCC, the number of securities per participant per day is approximately 51 equity securities. During the period from January to July 2008, approximately 4,321 new fail to deliver positions occurred per day. The NSCC data for this period includes only securities with at least 10,000 shares in fails to deliver. To account for securities with fails to deliver below 10,000 shares, the figure is grossed-up by a factor of 2.27. The factor is estimated from a more complete data set obtained from NSCC during the period from September 16, 2008 to September 22, 2008. It should be noted that these numbers include securities that were not subject to the close-out requirement of Rule 203(b)(3) of Regulation SHO.

[7] *See supra* note 1.

SECURITIES AND EXCHANGE COMMISSION

Submission for OMB Review; Comment Request

Upon Written Request, Copies Available From: Securities and Exchange Commission, Office of Investor Education and Advocacy, Washington, DC 20549–0213.

Extension:

Rule 154, SEC File No. 270–438, OMB Control No. 3235–0495.

Notice is hereby given that, under the Paperwork Reduction Act of 1995 (44 U.S.C. 3501–3520), the Securities and Exchange Commission (the ''Commission'') has submitted to the Office of Management and Budget a request for extension of the previously approved collection of information discussed below.

The federal securities laws generally prohibit an issuer, underwriter, or dealer from delivering a security for sale unless a prospectus meeting certain requirements accompanies or precedes the security. Rule 154 (17 CFR 230.154) under the Securities Act of 1933 (15 U.S.C. 77a) (the ''Securities Act'') permits, under certain circumstances, delivery of a single prospectus to investors who purchase securities from the same issuer and share the same address (''householding'') to satisfy the applicable prospectus delivery requirements.[1] The purpose of rule 154 is to reduce the amount of duplicative prospectuses delivered to investors sharing the same address.

Under rule 154, a prospectus is considered delivered to all investors at a shared address, for purposes of the federal securities laws, if the person relying on the rule delivers the prospectus to the shared address, addresses the prospectus to the investors as a group or to each of the investors individually, and the investors consent to the delivery of a single prospectus. The rule applies to prospectuses and prospectus supplements. Currently, the rule permits householding of all prospectuses by an issuer, underwriter, or dealer relying on the rule if, in addition to the other conditions set forth in the rule, the issuer, underwriter, or dealer has obtained from each investor written or implied consent to householding.[2] The rule requires issuers, underwriters, or dealers that wish to household prospectuses with implied consent to send a notice to each investor stating that the investors in the household will receive one prospectus in the future unless the investors provide contrary instructions. In addition, at least once a year, issuers, underwriters, or dealers, relying on rule 154 for the householding of prospectuses relating to open-end management investment companies that are registered under the Investment Company Act of 1940 (''mutual funds'') must explain to investors who have provided written or implied consent how they can revoke their consent.[3] Preparing and sending the notice and the annual explanation of the right to revoke are collections of information.

The rule allows issuers, underwriters, or dealers to household prospectuses if certain conditions are met. Among the conditions with which a person relying on the rule must comply are providing notice to each investor that only one prospectus will be sent to the household and, in the case of issuers that are mutual funds, providing to each investor who consents to householding an annual explanation of the right to revoke consent to the delivery of a single prospectus to multiple investors sharing an address. The purpose of the notice and annual explanation requirements of the rule is to ensure that investors who wish to receive individual copies of prospectuses are able to do so.

Although rule 154 is not limited to mutual funds, the Commission believes that it is used mainly by mutual funds and by broker-dealers that deliver mutual fund prospectuses. The Commission is unable to estimate the number of issuers other than mutual funds that rely on the rule.

The Commission estimates that, as of March 2012, there are approximately 1,700 mutual funds, approximately 400 of which engage in direct marketing and therefore deliver their own prospectuses. Of the approximately 400 mutual funds that engage in direct marketing, the Commission estimates that approximately half of these mutual funds (200) (i) do not send the implied consent notice requirement because they obtain affirmative written consent to household prospectuses in the fund's account opening documentation; or (ii) do not take advantage of the householding provision because of electronic delivery options which lessen the economic and operational benefits of rule 154 when compared with the costs of compliance. Therefore, the Commission estimates that each direct-marketed fund will spend an average of 20 hours per year complying with the notice requirement of the rule, for a total of 4,000 hours. Of the 400 mutual funds that engage in direct marketing, the Commission estimates that approximately seventy-five percent (300) of these funds will each spend 1 hour complying with the annual explanation of the right to revoke requirement of the rule, for a total of 300 hours. The Commission estimates that there are approximately 280 broker-dealers that carry customer accounts and, therefore, may be required to deliver mutual fund prospectuses. The Commission estimates that each affected broker-dealer will spend, on average, approximately 20 hours complying with the notice requirement of the rule, for a total of 5,600 hours. Each broker-dealer will also spend 1 hour complying with the annual explanation of the right to revoke requirement, for a total of 280 hours. Therefore, the total number of respondents for rule 154 is 580 (300 mutual funds plus 280 broker-dealers), and the estimated total hour burden is approximately 10,180 hours (4,300 hours for mutual funds plus 5,880 hours for broker-dealers).

The estimate of average burden hours is made solely for the purposes of the Paperwork Reduction Act, and is not derived from a comprehensive or even a representative survey or study of the costs of Commission rules and forms.

Compliance with the collection of information requirements of the rule is necessary to obtain the benefit of relying on the rule. Responses to the collections of information will not be kept confidential. The rule does not require these records be retained for any specific period of time. An agency may not conduct or sponsor, and a person is not required to respond to, a collection of information unless it displays a currently valid control number.

The public may view the background documentation for this information collection at the following Web site, *www.reginfo.gov.* Comments should be directed to: (i) Desk Officer for the Securities and Exchange Commission, Office of Information and Regulatory Affairs, Office of Management and Budget, Room 10102, New Executive Office Building, Washington, DC 20503,

[1] The Securities Act requires the delivery of prospectuses to investors who buy securities from an issuer or from underwriters or dealers who participate in a registered distribution of securities. *See* Securities Act sections 2(a)(10), 4(1), 4(3), 5(b) (15 U.S.C. 77b(a)(10), 77d(1), 77d(3), 77e(b)); *see also* rule 174 under the Securities Act (17 CFR 230.174) (regarding the prospectus delivery obligation of dealers); rule 15c2–8 under the Securities Exchange Act of 1934 (17 CFR 240.15c2–8) (prospectus delivery obligations of brokers and dealers).

[2] Rule 154 permits the householding of prospectuses that are delivered electronically to investors only if delivery is made to a shared electronic address and the investors give written consent to householding. Implied consent is not permitted in such a situation. *See* rule 154(b)(4).

[3] See rule 154(c).

or by sending an email to: *Shagufta_Ahmed@omb.eop.gov;* and (ii) Thomas Bayer, Director/Chief Information Officer, Securities and Exchange Commission, c/o Remi Pavlik-Simon, 6432 General Green Way, Alexandria, VA 22312 or send an email to: *PRA_Mailbox@sec.gov.* Comments must be submitted to OMB within 30 days of this notice.

Dated: August 20, 2012.

Elizabeth M. Murphy,

Secretary.

[FR Doc. 2012–20826 Filed 8–23–12; 8:45 am]

BILLING CODE 8011–01–P

SECURITIES AND EXCHANGE COMMISSION

[Release No. IC–30174; 812–14068]

ReconTrust Company, N.A., et al.; Notice of Application and Temporary Order

August 20, 2012.

AGENCY: Securities and Exchange Commission (''Commission'').

ACTION: Temporary order and notice of application for a permanent order under section 9(c) of the Investment Company Act of 1940 (''Act'').

Summary of Application: Applicants have received a temporary order exempting them from section 9(a) of the Act, with respect to an injunction entered against ReconTrust Company, N.A. (''ReconTrust'') on August 20, 2012 by the United States District Court for the Western District of Washington (the ''Injunction''), until the Commission takes final action on an application for a permanent order. Applicants have requested a permanent order.

Applicants: ReconTrust, BofA Advisors, LLC (''BofA Advisors''), BofA Distributors, Inc. (''BofA Distributors''), Bank of America Capital Advisors LLC (''BACA''), KECALP Inc. (''KECALP''), and Merrill Lynch Global Private Equity Inc. (''MLGPE'') (collectively, other than ReconTrust, the ''Fund Servicing Applicants,'' and, together with ReconTrust, the ''Applicants'').[1]

Filing Date: The application was filed on August 15, 2012, and amended on August 20, 2012.

Hearing or Notification of Hearing: An order granting the application will be issued unless the Commission orders a hearing. Interested persons may request a hearing by writing to the Commission's Secretary and serving Applicants with a copy of the request, personally or by mail. Hearing requests should be received by the Commission by 5:30 p.m. on September 14, 2012, and should be accompanied by proof of service on Applicants, in the form of an affidavit, or for lawyers, a certificate of service. Hearing requests should state the nature of the writer's interest, the reason for the request, and the issues contested. Persons who wish to be notified of a hearing may request notification by writing to the Commission's Secretary.

ADDRESSES: Secretary, U.S. Securities and Exchange Commission, 100 F Street NE., Washington, DC 20549–1090. Applicants, ReconTrust, 1800 Tapo Canyon Road, Simi Valley, CA 93063; BofA Advisors, BofA Distributors and BACA, 100 Federal Street, Boston, MA 02110; and KECALP and MLGPE, 767 Fifth Avenue, 7th Floor, New York, NY 10153.

FOR FURTHER INFORMATION CONTACT: Emerson S. Davis, Senior Counsel, at (202) 551–6868, or Daniele Marchesani, Branch Chief, at (202) 551–6821 (Division of Investment Management, Office of Investment Company Regulation).

SUPPLEMENTARY INFORMATION: The following is a temporary order and a summary of the application. The complete application may be obtained via the Commission's Web site by searching for the file number, or an applicant using the Company name box, at *http://www.sec.gov/search/search.htm* or by calling (202) 551–8090.

Applicants' Representations

1. Each of the Applicants is a direct or indirect wholly-owned subsidiary of Bank of America Corporation (''BAC''). ReconTrust is a chartered national trust bank that, among other things, acts as foreclosure trustee responsible for conducting nonjudicial foreclosures within several states, including the state of Washington until recently. ReconTrust is not registered as a broker-dealer under the Securities Exchange Act of 1934 or as an investment adviser under the Investment Advisers Act of 1940 (the ''Advisers Act'').

2. BofA Advisors is a registered investment adviser that serves as investment adviser and subadviser to certain money market funds registered under the Act. BofA Distributors, a limited purpose broker-dealer registered with the Commission, serves as principal underwriter of some of the same money market funds. BACA is a registered investment adviser that serves as investment adviser to certain closed-end investment companies also registered under the Act.

3. KECALP and MLGPE each serves as investment adviser to certain employees' securities companies within the meaning of section 2(a)(13) of the Act (''ESCs''). KECALP and MLGPE are registered as investment advisers under the Advisers Act.

4. On August 20, 2012, the United States District Court for the Western District of Washington entered the Injunction against ReconTrust, in a matter brought by the Attorney General of the State of Washington (the ''AG'').[2] The complaint filed by the AG (''Complaint'')[3] alleged that ReconTrust failed to comply with the procedures of the Washington Deeds of Trust Act (''Deeds of Trust Act'') in foreclosures it conducted since at least June 12, 2008. Denying any wrongdoing as alleged by the AG or otherwise, ReconTrust consented to the entry of the Injunction, which enjoined ReconTrust from doing business as a foreclosure trustee under deeds of trust with respect to property located in the State of Washington, except in certain circumstances.[4]

Applicants' Legal Analysis

1. Section 9(a)(2) of the Act, in relevant part, prohibits a person who has been enjoined from acting as a bank, or from engaging in or continuing any conduct or practice in connection with such activity, from acting, among other things, as an investment adviser or depositor of any registered investment company, or a principal underwriter for any registered open-end investment company, registered unit investment trust (''UIT'') or registered face-amount certificate company. Section 9(a)(3) of the Act extends the prohibitions of section 9(a)(2) to a company any affiliated person of which has been disqualified under the provisions of section 9(a)(2). Section 2(a)(3) of the Act defines ''affiliated person'' to include, among others, any person directly or indirectly controlling, controlled by, or under common control with, the other person. Applicants state that ReconTrust is, or may be considered to be, under common control with and therefore an affiliated person of each of

[1] Applicants request that any relief granted pursuant to the application also apply to any other company of which ReconTrust is an affiliated person or may become an affiliated person in the future (together with the Applicants, the ''Covered Persons'').

[2] *State of Washington* v. *ReconTrust Company,* N.A. No. 2:11–cv–1460 (W.D. Wash. August 20, 2012).

[3] The Complaint was initially filed in the State of Washington King County Superior Court in a civil action and the matter was later removed to the United States Western District Court of Washington.

[4] This Injunction will terminate three years after its entry. As described in the application, ReconTrust is required to take certain remedial actions to address the conduct that served as the basis for the Injunction.

the other Applicants. Applicants state that the entry of the Injunction may result in Applicants being subject to the disqualification provisions of section 9(a) of the Act because ReconTrust is enjoined from engaging in or continuing particular conduct or practice in connection with banking activity.[5]

2. Section 9(c) of the Act provides that the Commission shall grant an application for exemption from the disqualification provisions of section 9(a) if it is established that these provisions, as applied to Applicants, are unduly or disproportionately severe or that the Applicants' conduct has been such as not to make it against the public interest or the protection of investors to grant the exemption. Applicants have filed an application pursuant to section 9(c) seeking a temporary and permanent order exempting the Applicants and the other Covered Persons from the disqualification provisions of section 9(a) of the Act.

3. Applicants believe they meet the standard for exemption specified in section 9(c). Applicants state that the prohibitions of section 9(a) as applied to them would be unduly and disproportionately severe and that the conduct of Applicants has been such as not to make it against the public interest or the protection of investors to grant the exemption from section 9(a).

4. Applicants state that the conduct giving rise to the Injunction did not involve any of the Applicants acting in the capacity as investment adviser, sub-adviser, or principal underwriter (as defined in section 2(a)(29) of the Act) for any registered investment companies (''RIC'') or ESCs (together with any business development company, ''Funds''). Applicants state that to the best of their reasonable knowledge none of the Applicants' current directors, officers or employees who is involved in providing services as investment adviser, subadviser or depositor for any Funds or principal underwriter (as defined in section 2(a)(29) of the Act) for any registered open-end company, UIT or registered face amount certificate company (collectively, the ''Fund Servicing Activities'') (or any other persons in such roles during the time period covered by the Complaint) participated in the conduct alleged in the Complaint that constitutes the violations that provide a basis for the Injunction. Applicants also state that the alleged conduct giving rise to the Injunction did not involve any Fund for which an Applicant provided Fund Servicing Activities.

5. Applicants further represent that the inability of Applicants (except for ReconTrust) to continue providing Fund Servicing Activities would result in potentially severe financial hardships for both the Funds and their shareholders. Applicants state that they will distribute written materials, including an offer to meet in person to discuss the materials, to the board of directors of each Fund (excluding the ESCs), including the directors who are not ''interested persons,'' as defined in section 2(a)(19) of the Act, of such Fund, and their independent legal counsel as defined in rule 0–1(a)(6) under the Act, if any, regarding the Injunction, any impact on the Funds, and the application. The Applicants will provide the Funds with all information concerning the Injunction and the application that is necessary for the Funds to fulfill their disclosure and other obligations under the federal securities laws.

6. Applicants also assert that, if the Applicants were barred from engaging in Fund Servicing Activities, the effect on their businesses and employees would be severe. The Applicants state that they have committed substantial resources to establishing expertise in providing Fund Servicing Activities.

7. Applicants also state that disqualifying KECALP and MLGPE from continuing to provide investment advisory services to their ESCs is not in the public interest or in furtherance of the protection of investors and would frustrate the expectations of eligible employees who invest in the ESCs that the ESCs would be managed by an affiliate of their employer.

8. Applicants state that several Applicants and certain of their affiliates have previously received orders under section 9(c), as described in greater detail in the application.

Applicants' Condition

Applicants agree that any order granting the requested relief will be subject to the following condition:

Any temporary exemption granted pursuant to the application shall be without prejudice to, and shall not limit the Commission's rights in any manner with respect to, any Commission investigation of, or administrative proceedings involving or against, Covered Persons, including without limitation, the consideration by the Commission of a permanent exemption from section 9(a) of the Act requested pursuant to the application, or the revocation or removal of any temporary exemptions granted under the Act in connection with the application.

Temporary Order

The Commission has considered the matter and finds that Applicants have made the necessary showing to justify granting a temporary exemption.

Accordingly,

It is hereby ordered, pursuant to section 9(c) of the Act, that the Applicants and the other Covered Persons are granted a temporary exemption from the provisions of section 9(a), effective forthwith, solely with respect to the Injunction, subject to the condition in the application, until the date the Commission takes final action on their application for a permanent order.

By the Commission.

Elizabeth M. Murphy,

Secretary.

[FR Doc. 2012–20859 Filed 8–23–12; 8:45 am]

BILLING CODE 8011–01–P

[5] Applicants represent that the foreclosure trustee activity specified in the Injunction is the same as or similar to at least some of the loan servicing activity deemed banking activity by an administrative order issued by the Office of the Comptroller of the Currency. *See In the Matter of Bank of America, N.A.,* The Office of the Comptroller of the Currency Stipulation & Consent Order No. AA–EC–11–12 (Apr. 13, 2011) (the ''OCC Order''). Applicants state that under the standard set forth in the OCC Order, ReconTrust is enjoined from engaging in or continuing particular conduct or practice in connection with banking activity.

SECURITIES AND EXCHANGE COMMISSION

[Release No. 34–67684; File No. SR–NYSEMKT–2012–14]

Self-Regulatory Organizations; NYSE MKT LLC; Order Granting Approval of Proposed Rule Change Adopting Rules Governing the Listing and Trading of New Products Known as DIVS, OWLS, and RISKS

August 17, 2012.

I. Introduction

On June 19, 2012, NYSE MKT LLC (''Exchange'' or ''NYSE MKT''), on behalf of NYSE Amex Options LLC, filed with the Securities and Exchange Commission (''Commission''), pursuant to Section 19(b)(1) of the Securities Exchange Act of 1934 (''Act'') [1] and Rule 19b-4 thereunder,[2] a proposed rule change to adopt rules governing the listing and trading of new products known as DIVS, OWLS, and RISKS (collectively, ''DORS''). The proposed rule change was published for comment in the **Federal Register** on July 6, 2012.[3] The Commission received no comments on the proposed rule change. This order approves the proposed rule change.

[1] 15 U.S.C. 78s(b)(1).

[2] 17 CFR 240.19b–4.

[3] *See* Securities Exchange Act Release No. 67315 (June 12, 2012), 77 FR 130 (''Notice'').

II. Description of the Proposed Rule Change

The Exchange proposes to adopt rules governing the listing and trading of new products known as DIVS, OWLS, and RISKS. Each product has a different risk/reward profile and may be bought or sold separately to achieve a specific investment goal. The three products, when combined appropriately (*i.e.,* long a DIVS, OWLS, and RISKS on the same underlying security, having the same expiration, where the OWLS and RISKS have identical strike prices), are expected to generate total returns that replicate that of a long stock position held for the same duration. The Exchange believes that the structure of the product will enable investors to hedge or obtain exposure to discrete portions of the total return of a security.

DIVS. The phrase ''Dividend Value of Stock'' or ''DIVS'' refers to an option contract that returns to the investor a stream of periodic cash flows equivalent to the dividends paid by the underlying stock. An investor that holds a long DIVS contract will receive cash payments equal to the dividend paid by the underlying security. Such payment will occur on the ''ex-dividend'' date for the underlying security. The investor will continue to have the right to earn such dividend-equivalent cash payments as long as the investor remains long the DIVS contract until expiration. DIVS contracts will be European-style and cannot be exercised prior to expiration.

OWLS. The phrase ''Options with Limited Stock'' or ''OWLS'' refers to an option contract that returns to the investor at expiration shares of the underlying security equal in value to the lesser of (1) the current value of the underlying security or (2) the strike price of the option contract. At expiration, regardless of how high the stock closes above the strike price of an OWLS contract, the holders of the contract will never receive more than shares of stock equivalent in value to the strike price of the OWLS contract. The risk/reward of a long OWLS position is similar to a buy/write or covered call position, less the dividends, if any. A long OWLS position offers investors some limited downside protection in exchange for limiting their upside participation to the strike price of the OWLS contract. OWLS contracts will be European-style and cannot be exercised prior to expiration.

RISKS. The phrase ''Residual Interest in Stock'' or ''RISKS'' refers to an option contract that returns to the investor at expiration shares of the underlying security equal in value to the difference between the value of the underlying security at expiration and the strike price of the contract. At expiration, holders of RISKS will receive nothing if the stock closes at or below the strike price of the RISKS contract. A position consisting of a long RISKS contract has a risk/reward similar to that of a long call position. A long RISKS position offers an investor all of the upside price appreciation above the strike price of the RISKS contract while limiting the investor's capital at risk to the premium paid to acquire the RISKS contract. RISKS contracts will be European-style and cannot be exercised prior to expiration.

Listing Standards. Any security eligible for listed options pursuant to NYSE MKT Rule 915 will be eligible for the listing of DORS. The Exchange has stated that it will generally avoid listing DORS on securities that meet the criteria in Rule 915 but do not in fact have regular put and call options listed for trading.

Series Open for Trading. DIVS, OWLS, and RISKS will be listed with expirations of up to six years from the listing date. The Exchange intends to list five consecutive-year expiration series at any one time, with the expiration date set to coincide with regular options expiration on the third Friday of January in each expiration year.

At the initial time of listing, the Exchange will seek to list both OWLS and RISKS with strike prices that are slightly in or out of the money. Periodically the Exchange will introduce new strikes as necessary to ensure that both OWLS and RISKS that are slightly in or out of the money will be available for trading. The listing of a new OWLS series will result in the listing of a RISKS contract with the same terms, and vice versa. Standard strike price intervals will apply to series of both OWLS and RISKS. DIVS, however, will always have one strike available for trading for a given expiration series. DIVS will always be listed with a strike price of $0.01.

Settlement. All DORS components will be automatically exercised, and settled in accordance with the policies and procedures of the Options Clearing Corporation (''OCC''). Settlement of OWLS and RISKS will be made via a combination of shares of the underlying security plus cash in lieu of any fractional shares of the underlying security, except that RISKS may expire worthless and convey nothing at expiration upon assignment. At expiration, holders of OWLS will receive shares of the underlying security plus cash in lieu of fractional shares equal to the lesser of the composite closing price of the stock or the strike price of the OWLS contract. RISKS contracts will settle for shares of stock equal to the value (if any) between the difference of the composite closing price of the stock at expiration and the strike price of the RISKS contract. Though all DIVS contracts will be limited to strike prices of $0.01, settlement will not require delivery (receipt) of $1 per contract assigned (exercised) because there is no value attached to the strike price; the only amount due will be potentially a cash amount equal to any dividend amount that the underlying security is ''ex'' on expiration Friday.

Additional information relating to DORS, including listing standards, exercise and settlement, symbology, margin rules, and position limits can be found in the Notice.

III. Discussion

The Commission finds that the proposed rule change is consistent with the requirements of the Act and the rules and regulations thereunder applicable to a national securities exchange.[4] In particular, the Commission finds that the proposed rule change is consistent with the requirements of Section 6(b)(5) of the Act,[5] which requires, among other things, that the Exchange's rules be designed promote just and equitable principles of trade, to remove impediments to and perfect the mechanism of a free and open market and a national market system, and, in general, to protect investors and the public interest. The Commission believes that the proposal appropriately balances, on the one hand, the Exchange's desire to offer new products to investors with, on the other hand, the necessity of having appropriate rules for listing, trading, capital, and margin, among other considerations relevant under the Act.

IV. Conclusion

It is therefore ordered, pursuant to Section 19(b)(2) of the Act,[6] that the proposed rule change (SR–NYSEMKT–2012–14) be, and hereby is, approved.

[4] In approving this proposed rule change, the Commission notes that it has considered the proposed rule's impact on efficiency, competition, and capital formation. *See* 15 U.S.C. 78c(f).

[5] 15 U.S.C. 78f(b)(5).

[6] 15 U.S.C. 78s(b)(2).

[7] 17 CFR 200.30–3(a)(12).

For the Commission, by the Division of Trading and Markets, pursuant to delegated authority.[7]

Elizabeth M. Murphy,

Secretary.

[FR Doc. 2012–20817 Filed 8–23–12; 8:45 am]

BILLING CODE 8011–01–P

SECURITIES AND EXCHANGE COMMISSION

[Release No. 34–67695; File No. SR–NYSEMKT–2012–38]

Self-Regulatory Organizations; NYSE MKT LLC; Notice of Filing and Immediate Effectiveness of Proposed Rule Change Making Certain Conforming Changes to Its Rules Following the Change in the Exchange's Name From NYSE Amex LLC (''NYSE Amex'') to NYSE MKT LLC

August 20, 2012.

Pursuant to Section 19(b)(1) of the Securities Exchange Act of 1934 (''Act'')[1] and Rule 19b–4 thereunder,[2] notice is hereby given that, on August 9, 2012, NYSE MKT LLC (the ''Exchange'' or ''NYSE MKT'') filed with the Securities and Exchange Commission (''Commission'') the proposed rule change as described in Items I, II and III below, which Items have been prepared by the Exchange. The Commission is publishing this notice to solicit comments on the proposed rule change from interested persons.

I. Self-Regulatory Organization's Statement of the Terms of Substance of the Proposed Rule Change

The Exchange proposes to make certain conforming changes to its rules following the change in the Exchange's name from NYSE Amex LLC (''NYSE Amex'') to NYSE MKT LLC. The text of the proposed rule change is available on the Exchange's Web site at *www.nyse.com,* at the principal office of the Exchange, and at the Commission's Public Reference Room.

II. Self-Regulatory Organization's Statement of the Purpose of, and Statutory Basis for, the Proposed Rule Change

In its filing with the Commission, the self-regulatory organization included statements concerning the purpose of, and basis for, the proposed rule change and discussed any comments it received on the proposed rule change. The text of those statements may be examined at the places specified in Item IV below. The Exchange has prepared summaries, set forth in sections A, B, and C below, of the most significant parts of such statements.

A. Self-Regulatory Organization's Statement of the Purpose of, and Statutory Basis for, the Proposed Rule Change

1. Purpose

The Exchange proposes to make certain conforming changes to its rules following the change in the Exchange's name from NYSE Amex to NYSE MKT LLC.[3]

As part of the Exchange's name change, the Exchange simplified cross-references within the Exchange's rules. The Exchange shortened references to ''NYSE Amex Equities'' to ''Equities'' (e.g., Rule 0—NYSE Amex Equities became Rule 0—Equities). The Exchange proposes to change several remaining cross-references to certain NYSE Amex Equities rules in Rules 17—Equities, 80B—Equities, 107B—Equities, 107C—Equities, 127—Equities, 128—Equities, 241—Equities, 250—Equities, 273—Equities, 432—Equities, and 502—Equities. Lastly, the Exchange proposes to replace a reference to ''Amex'' in Rule 193 and references to ''NYSE Amex Equities'' and ''NYSE Amex'' in Rule 107C—Equities with references to ''Exchange.''

2. Statutory Basis

The Exchange believes that the proposed rule change is consistent with Section 6(b) of the Securities Exchange Act of 1934 (the ''Act''),[4] in general, and Section 6(b)(5) of the Act,[5] in particular, in that it is designed to prevent fraudulent and manipulative acts and practices, to promote just and equitable principles of trade, to foster cooperation and coordination with persons engaged in facilitating transactions in securities, to remove impediments to and perfect the mechanism of a free and open market and a national market system and, in general, to protect investors and the public interest. The Exchange is proposing certain conforming changes that would make the rule text more uniform, which is in the public interest.

B. Self-Regulatory Organization's Statement on Burden on Competition

The Exchange does not believe that the proposed rule change will impose any burden on competition that is not necessary or appropriate in furtherance of the purposes of the Act.

C. Self-Regulatory Organization's Statement on Comments on the Proposed Rule Change Received From Members, Participants, or Others

No written comments were solicited or received with respect to the proposed rule change.

III. Date of Effectiveness of the Proposed Rule Change and Timing for Commission Action

The foregoing proposed rule change is concerned solely with the administration of the Exchange pursuant to Section 19(b)(3)(A)(iii)[6] of the Act and Rule 19b–4(f)(3)[7] thereunder. Accordingly, the proposal will take effect upon filing with the Commission. At any time within 60 days of the filing of the proposed rule change, the Commission summarily may temporarily suspend such rule change if it appears to the Commission that such action is necessary or appropriate in the public interest, for the protection of investors, or otherwise in furtherance of the purposes of the Act.

IV. Solicitation of Comments

Interested persons are invited to submit written data, views, and arguments concerning the foregoing, including whether the proposed rule change is consistent with the Act. Comments may be submitted by any of the following methods:

Electronic Comments

- Use the Commission's Internet comment form (*http://www.sec.gov/rules/sro.shtml*); or
- Send an email to *rule-comments@sec.gov.* Please include File Number SR–NYSEMKT–2012–38 on the subject line.

Paper Comments

- Send paper comments in triplicate to Elizabeth M. Murphy, Secretary, Securities and Exchange Commission, 100 F Street NE., Washington, DC 20549–1090.

All submissions should refer to File Number SR–NYSEMKT–2012–38. This file number should be included on the subject line if email is used. To help the Commission process and review your comments more efficiently, please use only one method. The Commission will post all comments on the Commission's Internet Web site (*http://www.sec.gov/rules/sro.shtml*). Copies of the submission, all subsequent

[1] 15 U.S.C. 78s(b)(1).

[2] 17 CFR 240.19b–4.

[3] *See* Securities Exchange Act Release No. 67037 (May 21, 2012), 77 FR 31415 (May 25, 2012) (SR–NYSEAmex–2012–32).

[4] 15 U.S.C. 78f(b).

[5] 15 U.S.C. 78f(b)(5).

[6] 15 U.S.C. 78s(b)(3)(A)(iii).

[7] 17 CFR 240.19b–4(f)(3).

amendments, all written statements with respect to the proposed rule change that are filed with the Commission, and all written communications relating to the proposed rule change between the Commission and any person, other than those that may be withheld from the public in accordance with the provisions of 5 U.S.C. 552, will be available for Web site viewing and printing in the Commission's Public Reference Room, 100 F Street NE., Washington, DC 20549, on official business days between the hours of 10 a.m. and 3 p.m. Copies of the filing also will be available for inspection and copying at the principal office of the Exchange. All comments received will be posted without change; the Commission does not edit personal identifying information from submissions. You should submit only information that you wish to make available publicly. All submissions should refer to File Number SR–NYSEMKT–2012–38 and should be submitted on or before September 14, 2012.

For the Commission, by the Division of Trading and Markets, pursuant to delegated authority.[8]

Elizabeth M. Murphy,

Secretary.

[FR Doc. 2012–20855 Filed 8–23–12; 8:45 am]

BILLING CODE 8011–01–P

[8] 17 CFR 200.30–3(a)(12).

SECURITIES AND EXCHANGE COMMISSION

[Release No. 34–67694; File No. SR–EDGX–2012–35]

Self-Regulatory Organizations; EDGX Exchange, Inc.; Notice of Filing and Immediate Effectiveness of Proposed Rule Change To Terminate Revenue Sharing Agreement

August 20, 2012.

Pursuant to Section 19(b)(1) of the Securities Exchange Act of 1934 (the ''Act''),[1] and Rule 19b–4 thereunder,[2] notice is hereby given that on August 8, 2012, EDGX Exchange, Inc. (''EDGX'' or the ''Exchange'') filed with the Securities and Exchange Commission (the ''Commission'') the proposed rule change as described in Items I, II and III below, which items have been prepared by the Exchange. The Commission is publishing this notice to solicit comments on the proposed rule change from interested persons.

[1] 15 U.S.C. 78s(b)(1).

[2] 17 CFR 240.19b–4.

I. Self-Regulatory Organization's Statement of the Terms of Substance of the Proposed Rule Change

The Exchange proposes a rule change to terminate a revenue sharing program with Correlix, Inc. (''Correlix''). The text of the proposed rule change is attached as Exhibit 5 and is available on the Exchange's Web site at *www.directedge.com,* at the Exchange's principal office, and at the Public Reference Room of the Commission.

II. Self-Regulatory Organization's Statement of the Purpose of, and Statutory Basis for, the Proposed Rule Change

In its filing with the Commission, the Exchange included statements concerning the purpose of, and basis for, the proposed rule change and discussed any comments it received on the proposed rule change. The text of these statements may be examined at the places specified in Item IV below. The self-regulatory organization has prepared summaries, set forth in Sections A, B and C below, of the most significant aspects of such statements.

A. Self-Regulatory Organization's Statement of the Purpose of, and the Statutory Basis for, the Proposed Rule Change

Purpose

The Exchange proposes to eliminate its revenue sharing program with Correlix, which was adopted to provide Users[3] with real-time analytical tools to measure latency of orders to and from the System. In 2010, the Exchange entered into an agreement with Correlix, under which the Exchange receives 30% of the total monthly subscription fees received by Correlix from parties who contracted directly with Correlix to use its RaceTeam latency measurement service for EDGX.[4] The Exchange proposes to terminate the revenue sharing relationship with Correlix due to the lack of customer interest in the measurement tools offered.

Basis

The Exchange believes that the proposed rule change is consistent with the provisions of Section 6 of the Act,[5] in general, and with Section 6(b)(5) of the Act,[6] in particular, in that the proposal is designed to prevent fraudulent and manipulative acts and practices, to promote just and equitable principles of trade, to foster cooperation and coordination with persons engaged in regulating, clearing, settling, processing information with respect to, and facilitating transactions in securities, to remove impediments to and perfect the mechanism of a free and open market and a national market system, and, in general, to protect investors and the public interest. Specifically, the Exchange believes ending the revenue sharing agreement for a product customers have not chosen to utilize is responsive to market participants and eliminates confusion about offered products.

[3] As defined in EDGX Rule 1.5(ee).

[4] *See* Exchange Act Release No. 62929 (September 17, 2010), 75 FR 58003 (September 23, 2010) (SR–EDGX–2010–09).

[5] 15 U.S.C. 78f.

[6] 15 U.S.C. 78f(b)(5).

B. Self-Regulatory Organization's Statement on Burden on Competition

The Exchange does not believe that the proposed rule change will result in any burden on competition that is not necessary or appropriate in furtherance of the purposes of the Act, as amended. Specifically, the Exchange believes that terminating the revenue sharing agreement will not burden competition since the latency measurement tools are not currently being used by any customers.

C. Self-Regulatory Organization's Statement on Comments on the Proposed Rule Change Received From Members, Participants, or Others

The Exchange has not solicited, and does not intend to solicit, comments on this proposed rule change. The Exchange has not received any unsolicited written comments from its Members or other interested parties.

III. Date of Effectiveness of the Proposed Rule Change and Timing for Commission Action

Because the foregoing proposed rule change does not: (i) Significantly affect the protection of investors or the public interest; (ii) impose any significant burden on competition; and (iii) become operative for 30 days after the date of the filing, or such shorter time as the Commission may designate, it has become effective pursuant to 19(b)(3)(A) of the Act[7] and Rule 19b–4(f)(6) thereunder.[8]

A proposed rule change filed under Rule 19b–4(f)(6)[9] normally does not become operative prior to 30 days after the date of the filing. However, pursuant

[7] 15 U.S.C. 78s(b)(3)(A).

[8] 17 CFR 240.19b–4(f)(6). Rule 19b–4(f)(6) requires a self-regulatory organization to give the Commission written notice of its intent to file the proposed rule change at least five business days prior to the date of filing of the proposed rule change, or such shorter time as designated by the Commission. The Exchange has satisfied this requirement.

[9] 17 CFR 240.19b–4(f)(6).

to Rule 19b–4(f)(6)(iii),[10] the Commission may designate a shorter time if such action is consistent with the protection of investors and the public interest. The Exchange has requested that the Commission waive the 30-day operative delay and designate the proposed rule change to become operative upon filing to eliminate confusion on the part of potential customers regarding the availability of the Correlix RaceTeam offering. The Commission believes that waiving the 30-day operative delay is consistent with the protection of investors and the public interest. The Exchange represents that there are no customers currently using Correlix's RaceTeam latency measurement service. Therefore, the Commission designates the proposed rule change as operative upon filing with the Commission.[11]

At any time within 60 days of the filing of the proposed rule change, the Commission summarily may temporarily suspend such rule change if it appears to the Commission that such action is necessary or appropriate in the public interest, for the protection of investors, or otherwise in furtherance of the purposes of the Act. If the Commission takes such action, the Commission shall institute proceedings to determine whether the proposed rule should be approved or disapproved.

IV. Solicitation of Comments

Interested persons are invited to submit written data, views, and arguments concerning the foregoing, including whether the proposed rule change is consistent with the Act. Comments may be submitted by any of the following methods:

Electronic Comments

- Use the Commission's Internet comment form (*http://www.sec.gov/rules/sro.shtml*); or
- Send an email to *rule-comments@sec.gov.* Please include File Number SR–EDGX–2012–35 on the subject line.

Paper Comments

- Send paper comments in triplicate to Elizabeth M. Murphy, Secretary, Securities and Exchange Commission, 100 F Street NE., Washington, DC 20549–1090.

All submissions should refer to File Number SR–EDGX–2012–35. This file number should be included on the subject line if email is used. To help the Commission process and review your comments more efficiently, please use only one method. The Commission will post all comments on the Commission's Internet Web site (*http://www.sec.gov/rules/sro.shtml*). Copies of the submission, all subsequent amendments, all written statements with respect to the proposed rule change that are filed with the Commission, and all written communications relating to the proposed rule change between the Commission and any person, other than those that may be withheld from the public in accordance with the provisions of 5 U.S.C. 552, will be available for Web site viewing and printing in the Commission's Public Reference Room, 100 F Street NE., Washington, DC 20549, on official business days between the hours of 10 a.m. and 3 p.m. Copies of the filing also will be available for inspection and copying at the principal office of the Exchange. All comments received will be posted without change; the Commission does not edit personal identifying information from submissions. You should submit only information that you wish to make available publicly. All submissions should refer to File Number SR–EDGX–2012–35 and should be submitted on or before September 14, 2012.

For the Commission, by the Division of Trading and Markets, pursuant to delegated authority.[12]

Elizabeth M. Murphy,

Secretary.

[FR Doc. 2012–20854 Filed 8–23–12; 8:45 am]

BILLING CODE 8011–01–P

[10] 17 CFR 240.19b–4(f)(6)(iii).

[11] For purposes only of waiving the 30-day operative delay, the Commission has considered the proposed rule's impact on efficiency, competition, and capital formation. See 15 U.S.C. 78c(f).

[12] 17 CFR 200.30–3(a)(12).

SECURITIES AND EXCHANGE COMMISSION

[Release No. 34–67693; File No. SR–EDGA–2012–36]

Self-Regulatory Organizations; EDGA Exchange, Inc.; Notice of Filing and Immediate Effectiveness of Proposed Rule Change To Terminate Revenue Sharing Agreement

August 20, 2012.

Pursuant to Section 19(b)(1) of the Securities Exchange Act of 1934 (the ''Act''),[1] and Rule 19b–4 thereunder,[2] notice is hereby given that on August 8, 2012, EDGA Exchange, Inc. (''EDGA'' or the ''Exchange'') filed with the Securities and Exchange Commission (the ''Commission'') the proposed rule change as described in Items I, II and III below, which items have been prepared by the Exchange. The Commission is publishing this notice to solicit comments on the proposed rule change from interested persons.

I. Self-Regulatory Organization's Statement of the Terms of Substance of the Proposed Rule Change

The Exchange proposes a rule change to terminate a revenue sharing program with Correlix, Inc. (''Correlix''). The text of the proposed rule change is attached as Exhibit 5 and is available on the Exchange's Web site at *www.directedge.com,* at the Exchange's principal office, and at the Public Reference Room of the Commission.

II. Self-Regulatory Organization's Statement of the Purpose of, and Statutory Basis for, the Proposed Rule Change

In its filing with the Commission, the Exchange included statements concerning the purpose of, and basis for, the proposed rule change and discussed any comments it received on the proposed rule change. The text of these statements may be examined at the places specified in Item IV below. The self-regulatory organization has prepared summaries, set forth in Sections A, B and C below, of the most significant aspects of such statements.

A. Self-Regulatory Organization's Statement of the Purpose of, and the Statutory Basis for, the Proposed Rule Change

Purpose

The Exchange proposes to eliminate its revenue sharing program with Correlix, which was adopted to provide Users[3] with real-time analytical tools to measure latency of orders to and from the System. In 2010, the Exchange entered into an agreement with Correlix, under which the Exchange receives 30% of the total monthly subscription fees received by Correlix from parties who contracted directly with Correlix to use its RaceTeam latency measurement service for EDGA.[4] The Exchange proposes to terminate the revenue sharing relationship with Correlix due to the lack of customer interest in the measurement tools offered.

Basis

The Exchange believes that the proposed rule change is consistent with the provisions of Section 6 of the Act,[5]

[1] 15 U.S.C. 78s(b)(1).

[2] 17 CFR 240.19b–4.

[3] As defined in EDGA Rule 1.5(ee).

[4] *See* Exchange Act Release No. 62928 (September 17, 2010), 75 FR 58002 (September 23, 2010) (SR–EDGA–2010–09).

[5] 15 U.S.C. 78f.

in general, and with Section 6(b)(5) of the Act,[6] in particular, in that the proposal is designed to prevent fraudulent and manipulative acts and practices, to promote just and equitable principles of trade, to foster cooperation and coordination with persons engaged in regulating, clearing, settling, processing information with respect to, and facilitating transactions in securities, to remove impediments to and perfect the mechanism of a free and open market and a national market system, and, in general, to protect investors and the public interest. Specifically, the Exchange believes ending the revenue sharing agreement for a product customers have not chosen to utilize is responsive to market participants and eliminates confusion about offered products.

B. Self-Regulatory Organization's Statement on Burden on Competition

The Exchange does not believe that the proposed rule change will result in any burden on competition that is not necessary or appropriate in furtherance of the purposes of the Act, as amended. Specifically, the Exchange believes that terminating the revenue sharing agreement will not burden competition since the latency measurement tools are not currently being used by any customers.

C. Self-Regulatory Organization's Statement on Comments on the Proposed Rule Change Received From Members, Participants, or Others

The Exchange has not solicited, and does not intend to solicit, comments on this proposed rule change. The Exchange has not received any unsolicited written comments from its Members or other interested parties.

III. Date of Effectiveness of the Proposed Rule Change and Timing for Commission Action

Because the foregoing proposed rule change does not: (i) Significantly affect the protection of investors or the public interest; (ii) impose any significant burden on competition; and (iii) become operative for 30 days after the date of the filing, or such shorter time as the Commission may designate, it has become effective pursuant to 19(b)(3)(A) of the Act[7] and Rule 19b–4(f)(6) thereunder.[8]

A proposed rule change filed under Rule 19b–4(f)(6)[9] normally does not become operative prior to 30 days after the date of the filing. However, pursuant to Rule 19b–4(f)(6)(iii),[10] the Commission may designate a shorter time if such action is consistent with the protection of investors and the public interest. The Exchange has requested that the Commission waive the 30-day operative delay and designate the proposed rule change to become operative upon filing to eliminate confusion on the part of potential customers regarding the availability of the Correlix RaceTeam offering. The Commission believes that waiving the 30-day operative delay is consistent with the protection of investors and the public interest. The Exchange represents that there are no customers currently using Correlix's RaceTeam latency measurement service. Therefore, the Commission designates the proposed rule change as operative upon filing with the Commission.[11]

At any time within 60 days of the filing of the proposed rule change, the Commission summarily may temporarily suspend such rule change if it appears to the Commission that such action is necessary or appropriate in the public interest, for the protection of investors, or otherwise in furtherance of the purposes of the Act. If the Commission takes such action, the Commission shall institute proceedings to determine whether the proposed rule should be approved or disapproved.

IV. Solicitation of Comments

Interested persons are invited to submit written data, views, and arguments concerning the foregoing, including whether the proposed rule change is consistent with the Act. Comments may be submitted by any of the following methods:

Electronic Comments

- Use the Commission's Internet comment form (*http://www.sec.gov/rules/sro.shtml*); or
- Send an email to *rule-comments@sec.gov.* Please include File Number SR–EDGA–2012–36 on the subject line.

Paper Comments

- Send paper comments in triplicate to Elizabeth M. Murphy, Secretary, Securities and Exchange Commission, 100 F Street NE., Washington, DC 20549–1090.

All submissions should refer to File Number SR–EDGA–2012–36. This file number should be included on the subject line if email is used. To help the Commission process and review your comments more efficiently, please use only one method. The Commission will post all comments on the Commission's Internet Web site (*http://www.sec.gov/rules/sro.shtml*). Copies of the submission, all subsequent amendments, all written statements with respect to the proposed rule change that are filed with the Commission, and all written communications relating to the proposed rule change between the Commission and any person, other than those that may be withheld from the public in accordance with the provisions of 5 U.S.C. 552, will be available for Web site viewing and printing in the Commission's Public Reference Room, 100 F Street NE., Washington, DC 20549, on official business days between the hours of 10 a.m. and 3 p.m. Copies of the filing also will be available for inspection and copying at the principal office of the Exchange. All comments received will be posted without change; the Commission does not edit personal identifying information from submissions. You should submit only information that you wish to make available publicly. All submissions should refer to File Number SR–EDGA–2012–36 and should be submitted on or before September 14, 2012.

For the Commission, by the Division of Trading and Markets, pursuant to delegated authority.[12]

Elizabeth M. Murphy,

Secretary.

[FR Doc. 2012–20853 Filed 8–23–12; 8:45 am]

BILLING CODE 8011–01–P

[6] 15 U.S.C. 78f(b)(5).

[7] 15 U.S.C. 78s(b)(3)(A).

[8] 17 CFR 240.19b-4(f)(6). Rule 19b–4(f)(6) requires a self-regulatory organization to give the Commission written notice of its intent to file the proposed rule change at least five business days prior to the date of filing of the proposed rule change, or such shorter time as designated by the Commission. The Exchange has satisfied this requirement.

[9] 17 CFR 240.19b–4(f)(6).

[10] 17 CFR 240.19b–4(f)(6)(iii).

[11] For purposes only of waiving the 30-day operative delay, the Commission has considered the proposed rule's impact on efficiency, competition, and capital formation. See 15 U.S.C. 78c(f).

[12] 17 CFR 200.30–3(a)(12).

SECURITIES AND EXCHANGE COMMISSION

[Release No. 34–67686; File Nos. SR–NYSE–2012–19; SR–NYSEMKT–2012–13]

Self-Regulatory Organizations; New York Stock Exchange LLC; NYSE MKT LLC; Order Granting Approval to Proposed Rule Changes, as Modified by Amendment No. 1, (1) Amending NYSE Rule 13 and NYSE MKT Rule 13—Equities to Establish New Order Types, (2) Amending NYSE Rule 115A and NYSE MKT Rule 115A—Equities to Delete Obsolete Text and to Clarify and Update the Description of The Allocation of Market and Limit Interest in Opening and Reopening Transactions, (3) Amending NYSE Rule 123C and NYSE MKT Rule 123C—Equities to Include Better-Priced G Orders in The Allocation of Orders in Closing Transactions, and (4) Making Other Technical and Conforming Changes

August 17, 2012.

I. Introduction

On June 15, 2012, New York Stock Exchange LLC (''NYSE'') and NYSE MKT LLC (''NYSE MKT'' and together with NYSE, the ''Exchanges'') filed with the Securities and Exchange Commission (''Commission''), pursuant to Section 19(b)(1) of the Securities Exchange Act of 1934 (''Act'') [1] and Rule 19b–4 thereunder,[2] proposed rule changes to (1) amend NYSE Rule 13 and NYSE MKT Rule 13—Equities (hereinafter referred to collectively as ''Rule 13'') to establish new order types, (2) amend NYSE Rule 115A and NYSE MKT Rule 115A—Equities (hereinafter referred to collectively as ''Rule 115A'') to delete obsolete text and to clarify and update the description of the allocation of market and limit interest in opening and reopening transactions, (3) amend NYSE Rule 123C and NYSE MKT Rule 123C—Equities (hereinafter referred to collectively as ''Rule 123C'') to include better-priced G orders in the allocation of orders in closing transactions, and (4) make other technical and conforming changes. On June 27, 2012, the Exchanges filed Amendment No. 1 to their proposals. The proposed rule changes, as modified by Amendment No. 1, were published for comment in the **Federal Register** on July 6, 2012.[3] The Commission received no comments on the proposals. This order approves the proposed rule changes as modified by Amendment No. 1.

II. Description of the Proposals

The Exchanges propose to (1) amend Rule 13 to establish new order types, (2) amend Rule 115A to delete obsolete text and to clarify and update the description of the allocation of market and limit interest in opening and reopening transactions, (3) amend Rule 123C to include better-priced G orders in the allocation of orders in closing transactions, and (4) make other technical and conforming changes.

Amendments to Order Type Definitions Under Rule 13

The Exchanges propose deleting and replacing two types of opening orders currently defined in Rule 13 to stop opening orders from executing when a security opens on a quote or routing to an away market.

The orders the Exchanges propose to delete are ''At the Opening or At the Opening Only'' orders. These order types currently are defined in Rule 13 as market or limit orders which are to be executed on the opening trade of the stock on one of the Exchanges, or if one of the Exchanges opens the stock on a quote, the opening trade in the stock on another market center to which such order or part thereof has been routed in compliance with Regulation NMS. Under the current definition, any such order or portion thereof not so executed is to be treated as cancelled. Furthermore, all or part of such orders that seek the possibility of an NYSE- or NYSE MKT-only opening execution, and that are marked as a Regulation NMS-compliant Immediate or Cancel (''IOC'') order, are immediately and automatically cancelled if they are not executed on the opening trade of the stock on one of the Exchanges or if compliance with Regulation NMS would require all or part of such order to be routed to another market center.

The Exchanges propose to replace ''At the Opening or At the Opening Only'' orders with two new order types: Market ''On-the-Open'' (''MOO'') and Limit ''On-the-Open'' (''LOO'') orders. A MOO order would be defined as a market order in a security that is to be executed in its entirety on the opening or reopening trade of the security on the Exchange; it would be immediately and automatically cancelled if the security opened on a quote or not executed due to tick restrictions. A LOO order would be defined as a limit order in a security that is to be executed on the opening or reopening trade of the security on the Exchange. A LOO order, or a part thereof, would immediately and automatically cancel if by its terms it were not marketable at the opening price, if it were not executed on the opening trade of the security on the Exchange, or if the security opened on a quote. Both MOO and LOO orders could be entered before the open to participate on the opening trade or during a trading halt or pause to participate on a reopening trade.

The Exchanges also propose to add new order type to IOC Orders in Rule 13, the ''Immediate or Cancel Minimum Trade Size'' order (''IOC MTS order''). As proposed, any IOC order, including an intermarket sweep order, may include a minimum trade size (''MTS'') instruction.[4] For each incoming IOC–MTS order, Exchange systems will evaluate whether contra-side displayable and non-displayable interest on Exchange systems can meet the MTS instruction and will reject such incoming IOC–MTS order if Exchange contra-side volume cannot satisfy the MTS instruction. An IOC MTS order could result in an execution in an away market. The Exchanges would reject any IOC–MTS orders if the security is not open for trading or when auto-execution is suspended.

In conjunction with the substantive amendments described above, the Exchanges propose to make technical and conforming changes to the Immediate or Cancel order definition in Rule 13. The Exchanges would make conforming changes throughout the definition to provide that only an IOC order without an MTS instruction could be entered before the Exchange opening for participation in the opening trade or when auto execution is suspended, which includes during a trading pause or halt. In addition, NYSE proposes to delete existing paragraph (e) from its Immediate or Cancel order definition because the paragraph's references to commitments to trade received on the Floor through the Intermarket Trading System are no longer relevant, as the Intermarket Trading System was decommissioned in 2007.

Lastly, the Exchanges propose to delete several obsolete provisions of Rule 13. They propose to delete the definition of Time Order because this order typically related to a Floor broker order that historically would have been held by the specialist on behalf of the Floor broker and converted to a market or limit order at a specified time. The Exchange notes that this order can no

[1] 15 U.S.C. 78s(b)(1).

[2] 17 CFR 240.19b–4.

[3] *See* Securities Exchange Act Release Nos. 67317 (June 29, 2012), 77 FR 40133 (SR–NYSE–2012–19) and 67318 (June 29, 2012), 77 FR 40129 (SR–NYSEMKT–2012–13) (hereinafter referred to collectively as ''Notices'').

[4] A minimum trade size instruction currently is available to Floor brokers for d-quotes under NYSE Rule 70.25(d) and NYSE MKT Rule 70.25(d)—Equities.

longer be used by Floor brokers. Also, NYSE proposes to delete the definition of Auction Market Order [5] because this order type was never implemented, and to amend the definition of Auto Ex Order to remove a reference to the Automated Bond System, which is no longer operational.

Rule 115A—Opening Allocation

The Exchanges propose to amend Rule 115A, which addresses orders at the opening or in unusual situations. In its existing form, the Rule has no main text but has Supplementary Material .10, which addresses queries to the Display Book before an opening; Supplementary Material .20, which addresses the arranging of an opening or price by a Designated Market Maker (''DMM''); and Supplementary Material .30, which addresses certain functions of Exchange systems with respect to orders at the opening.

The Exchanges propose to re-designate what is now Supplementary Material .10 as paragraph (a) as the main text of Rule 115A. The Exchanges further propose to add new paragraph (b) to Rule 115A to address the process of arranging a price and the allocation of orders on opening and reopening trades. Proposed Rule 115A(b) would provide that when arranging an opening or reopening price, except as provided for in proposed Rule 115A(b)(2), which concerns opening a security on a quote and is described below, market interest [6] would be guaranteed to participate in the opening or reopening transaction and have precedence over (i) limit interest [7] that is priced equal to the opening or reopening price of a security and (ii) DMM interest.[8] In addition, G orders that are priced equal to the opening or reopening price of a security would yield to all other limit interest priced equal to the opening or reopening price of a security except DMM interest.

Proposed Rule 115A(b)(2) would clarify the circumstances surrounding when a security could open on a quote. As proposed, Rule 115A(b)(2) would provide that if the aggregate quantity of MOO and market orders on at least one side of the market equals one round lot or more, the security must open on a trade. If the aggregate quantity of MOO and market orders on each side of the market equals less than one round lot or is zero, the security could open on a quote. If a security opens on a quote, odd-lot market orders would automatically execute in a trade immediately following the open on a quote and odd-lot MOOs would immediately and automatically cancel. MOO and market orders subject to tick restrictions that either cannot participate at an opening or reopening price or are priced equal to the opening or reopening price would not be included in the aggregate quantity of MOO and market orders.

Finally, the Exchanges propose to delete Supplementary Material .20 and .30. The Exchanges state that much of the content of these provisions has been obsolete since the second phase of the New Market Model was launched in 2008.[9] For instance, the Exchanges note that some of the language in these provisions relates to DMMs holding orders, but DMMs no longer hold orders. Similarly, the Exchanges note that some of the language in Supplementary Material .30 describes systems of the Exchanges that are either outdated or otherwise covered by Rule 15, which deals with Pre-Opening Indications.

The Exchanges point out that to the extent certain concepts in Supplementary Material .20 are still relevant or applicable, they are incorporated into proposed new paragraph 115A(b), described above. For instance, current paragraphs 2(a), (b), and (c) of Supplementary Material .20 address the allocation and precedence of certain orders in openings and reopenings. Paragraph 2(a) provides that a limited price order to buy (sell) that is at a higher (lower) price than the security is to be opened or reopened is treated as a market order, and market orders have precedence over limited orders. Substantially similar language appears in proposed paragraph 115A(b)(1)(A)(iii). Paragraph 2(b) provides that when the price on a limited price order is the same as the price at which the stock is to be opened or reopened, it may not be possible to execute a limited price order at such price, and substantially similar language appears in proposed paragraph 115A(b)(1)(C). Paragraph 2(c) requires a DMM to see that each market order the DMM holds participates in the opening transaction, and if the order is for an amount larger than one round lot, the size of the bid that is accepted or the offer that is taken establishing the opening or reopening price is the amount that a market order is entitled to participate in at the opening or reopening. This concept is contained in proposed paragraph 115A(b).

Rule 123C—Closing Allocation and ''G Orders''

The Exchanges propose to amend Rules 13 and 123C as those rules relate to G orders. First, the Exchanges propose to add the phrase ''G orders'' as a formal definitional term to an existing order type found in Rule 13. Paragraph (g) of the Auto Ex Order definition in Rule 13 currently describes ''an order entered pursuant to Subsection (G) of Section 11(a)(1) of the Securities Exchange Act of 1934.'' The Exchanges explain in their Notices that this definition is meant to include proprietary orders of members of the Exchanges when those orders are executed by one of the members' floor brokers.[10] While the Auto Ex order type described in paragraph (g) was commonly referred to by the Exchanges as a ''G order'' and referred to as such elsewhere in the Exchanges' rules, it was not officially defined as such in the Exchanges' order type rules. The Exchanges now propose to add to the end of paragraph (g) of the Auto Ex Order definition a parenthetical phrase noting that such orders will be officially defined as ''G orders.''

The Exchanges also propose to amend Rule 123C to include better-priced G orders in the list of orders that must be allocated in whole or part in closing transactions. Currently, Rule 123C(7)(a) sets forth six order types that must be included in the closing transaction in

[5] *See* Securities Exchange Act Release No. 53539 (March 22, 2006), 71 FR 16353 (March 31, 2006) (SR–NYSE–2004–05) (Order Approving Proposed Rule Change to Establish a Hybrid Market) (describing the addition of the proposed Auction Market Order type).

[6] For purposes of the opening or reopening transaction, market interest would include (i) market and MOO orders, (ii) tick-sensitive market and MOO orders to buy (sell) that are priced higher (lower) than the opening or reopening price, (iii) limit interest to buy (sell) that is priced higher (lower) than the opening or reopening price, and (iv) Floor broker interest entered manually by the DMM. *See* proposed Rule 115A(b)(1)(A).

[7] For purposes of the opening or reopening transaction, limit interest would include (i) limited-priced interest, including e-Quotes, LOO orders, and G orders; and (ii) tick-sensitive market and MOO orders that are priced equal to the opening or reopening price of a security. *See* proposed Rule 115A(b)(1)(B).

[8] Limit interest that is priced equal to the opening or reopening price of a security and DMM interest would not be guaranteed to participate in the opening or reopening transaction. *See* proposed Rule 115A(b)(1)(C).

[9] *See* Securities Exchange Act Release Nos. 58845 (Oct. 24, 2008), 73 FR 73683) (Oct. 29, 2008) (SR–NYSE–2008–46); 59022 (Nov. 26, 2008), 73 FR 73683 (Dec. 3, 2008) (SR–NYSEALTR–2008–10).

[10] In a previous filing, NYSE MKT's predecessor described G orders as ''orders for an Exchange member's own account where the member meets a business mix test that requires it to be primarily engaged in the business of underwriting and distributing securities, selling securities to customers, and/or acting as a broker and provided more than 50% of its gross revenues is derived from such businesses and related activities.'' *See* Securities Exchange Act Release No. 63972 (Feb. 25, 2011), 76 FR 12202 (Mar. 4, 2011) (SR–NYSEAMEX–2011–09).

the following order: (1) MOC orders that do not have tick restrictions, (2) MOC orders that have tick restrictions that limit the execution of the MOC to a price better than the price of the closing transaction, (3) Floor broker interest entered manually by the DMM, (4) limit orders better priced than the closing price, (5) LOC orders that do not have tick restrictions better priced than the closing transaction, and (6) LOC orders better priced than the closing transaction that have tick restrictions that are capable of being executed based on the closing price (''must execute'' list). Once all of the ''must execute'' interest listed in Rule 123C(7)(a) has been satisfied, Rule 123C(7)(b) provides that the following interest may be used to offset a closing imbalance in the following order: (1) Limit orders represented in the Display Book with a price equal to the closing price, (2) LOC orders with a price equal to the closing price, (3) MOC orders that have tick restrictions that limit the execution of the MOC to the price of the closing transaction, (4) LOC orders that have tick restrictions that are capable of being executed based on the closing price and the price of such limit order is equal to the price of the closing transaction, (5) G orders, and (6) Closing Only orders (''may execute'' list).

The Exchanges propose to amend Rule 123C(7)(a) to add G orders that are priced better than the closing price as the last type of order that must be included in the closing transaction. In conjunction with this change, the Exchanges also propose to make a conforming change to the reference to G orders in paragraph 5 of Rule 123(C)(7)(b) (the ''may execute'' list of interest). Under the proposals, language would be added to paragraph 5 of Rule 123(C)(7)(b) to make clear that the G orders included in the ''may execute'' list of interest are those G orders with a price equal to the closing price—to be distinguished from the G orders priced better than the closing price that are being added to the list of ''must execute'' interest in 123(C)(7)(a).

Finally, the Exchanges propose one more change to the ''may execute'' list of interest. The Exchanges propose to amend Rule 123C(7)(b)(i) to add that DMM interest, as well as limit orders represented in the Display Book with a price equal to the closing price, are the first types of interest that may be used to offset a closing imbalance. According to the Exchanges, this is intended to be a clarifying change because they have noted before in prior rule filings that DMM interest would be treated in such a manner.[11]

III. Discussion and Commission's Findings

After carefully considering the proposed rule changes, as modified by Amendment No.1, the Commission finds that they are consistent with the requirements of the Act and the rules and regulations thereunder applicable to a national securities exchange.[12] In particular, the Commission finds that the proposals are consistent with Section 6(b) of the Act.[13] Specifically, the Commission believes that the proposed rule changes do not impose any burden on competition not necessary or appropriate in furtherance of the Act and are designed to promote just and equitable principles of trade, to prevent fraudulent and manipulative acts, and, in general, to protect investors and the public interest.[14]

The Exchanges' proposals to delete ''At the Opening or At the Opening Only'' orders, and to replace them with MOO and LOO orders, are intended to make clear that such opening orders will not execute when a security opens on a quote, and that they will not be routed to away markets. The Commission finds that the proposed MOO and LOO order type definitions are clear and transparent as to when such orders will be immediately and automatically cancelled; in the case of a MOO order, if the security opens on a quote or if it is not executed due to tick restrictions, and in the case of a LOO order, if it is not marketable at the opening price, it is not executed on the opening trade of a security, or if the security opens on a quote. The Commission notes that the MOO and LOO order types proposed by the Exchanges are variations of Market ''At-The-Close'' (''MOC'') and Limit ''At-The-Close'' (''LOC'') orders already offered by the Exchanges.[15] In addition, the proposed MOO and LOO order types are similar in concept and terminology to orders offered by other exchanges.[16]

The Commission finds that the other proposed amendments to Rule 13 are also consistent with the requirements of the Act. The Exchanges' proposed new IOC MTS order type will offer market participants added functionality and additional trading opportunities similar to what is offered in other trading venues.[17] The Exchanges' proposed non-substantive and technical conforming changes are consistent with the requirements of the Act because they clarify the rule text for ease of reference and delete obsolete language.

In addition, the Commission finds that the Exchanges' proposed revision of Rule 115A is consistent with the requirements of the Act. The proposals would specify how market interest would participate in the opening or reopening transaction and how market interest would have precedence over limit interest priced equal to the opening price or reopening price of a security and DMM interest. The Commission believes that the proposal should ensure that market interest, except as provided in Rule 115A(b)(2), would be guaranteed to participate in openings or reopenings.

The Commission also finds that the proposals would delete duplicative and obsolete language in Rule 115A, which should bring clarity to the Exchanges' rules. Similarly, the Commission finds that amending Rule 123C(7)(b)(i) to expressly provide for the treatment of DMM interest in offsetting a closing imbalance will add transparency and clarity to the Exchange's rules, thereby promoting just and equitable principles of trade.

Lastly, the Commission believes that the Exchanges' proposed changes to Rule 123C are consistent with the requirements of the Act, and in particular Section 11(a) of the Act. Section 11(a)(1) of the Act prohibits a member of a national securities exchange from effecting transactions on that exchange for its own account, the account of an associated person, or any account over which it or an associated person exercises discretion, unless an exception applies. Subsection (G) of Section 11(a)(1) provides an exemption from the general prohibition set forth in Section 11(a)(1) for any transaction for a member's own account, provided that: (i) Such member is primarily engaged in certain underwriting, distribution, and

[11] *See, e.g.,* Securities Exchange Act Release No. 60974 (Nov. 9, 2009) 74 FR 59299 (Nov. 17, 2009) (SR–NYSE–2009–111) (''After the 'must execute interest' is satisfied, then any limit orders represented in Display Book at the closing price may be used to offset the remaining imbalance. It should be noted that DMM interest, including better-priced DMM interest entered into the Display Book prior to the closing transaction, eligible to participate in the closing transaction is always included in the hierarchy of execution as if it were interest equal to the price of the closing transaction.'').

[12] In approving the proposal, the Commission has considered the proposed rule's impact on efficiency, competition, and capital formation. *See* 15 U.S.C. 78c(f).

[13] 15 U.S.C. 78(f)(b).

[14] 15 U.S.C. 78(f)(b)(5).

[15] *See* Rule 13.

[16] *See, e.g.,* NYSE Arca Equities Rule 7.31(t)(1) and (2); NASDAQ Rule 4752(a)(3) and (4); and BATS Exchange Rule 11.23(a)(14) and (16).

[17] *See, e.g.,* Nasdaq Stock Market Rule 4751(e)(5) (defining ''Minimum Quantity Orders'').

other activities; and (ii) the transaction is effected in compliance with the rules of the Commission, which, at a minimum, assure that the transaction is not inconsistent with the maintenance of fair and orderly markets and yields priority, parity and precedence in execution to orders for the account of persons who are not members or associated with members of the exchange.[18] In addition, Rule 11a1–1(T) under the Act specifies that a transaction effected on a national securities exchange for the account of a member which meets the requirements of Section 11(a)(1)(G)(i) of the Act is deemed, in accordance with the requirements of Section 11(a)(1)(G)(ii), to be not inconsistent with the maintenance of fair and orderly markets and to yield priority, parity, and precedence in execution to orders for the account of non-members or persons associated with non-members of the exchange, if such transaction is effected in compliance with certain requirements.[19]

Under the proposals, the Exchanges would add G orders priced better than the closing price to the list of ''must execute'' interest to be allocated in whole or part at the close. Only G orders priced better than the closing price would be eligible to execute as part of the ''must execute'' interest, and then only after execution of all other ''must execute'' interest.[20]

The Commission believes that it is consistent with the requirements of the Act for G orders priced better than the closing price to execute before ''may execute'' interest priced equal to the closing price. Such G orders could offer contra-side interest a chance at price improvement if executed prior to the close. Further, because the rules will require G orders priced better than the closing price to yield to all other eligible orders priced better than the closing price, the Commission believes that the proposal, with respect to such priority, is consistent with Section 11(a)(1)(G) of the Act[21] and Rule 11a1–1(T)(a)(3) thereunder.[22]

IV. Conclusion

It is therefore ordered, pursuant to Section 19(b)(2) of the Act,[23] that the proposed rule changes (SR–NYSE–2012–19 and SR–NYSEMKT–2012–13), as modified by Amendment No. 1, be, and hereby are, approved.

For the Commission, by the Division of Trading and Markets, pursuant to delegated authority.[24]

Elizabeth M. Murphy,

Secretary.

[FR Doc. 2012–20839 Filed 8–23–12; 8:45 am]

BILLING CODE 8011–01–P

[18] *See* 15 U.S.C. 78k(a)(1)(G).

[19] Rule 11a1–1(T)(a)(1)–(3) provides that each of the following requirements must be met: (1) A member must disclose that a bid or offer for its account is for its account to any member with whom such bid or offer is placed or to whom it is communicated, and any member through whom that bid or offer is communicated must disclose to others participating in effecting the order that it is for the account of a member; (2) immediately before executing the order, a member (other than the specialist in such security) presenting any order for the account of a member on the exchange must clearly announce or otherwise indicate to the specialist and to other members then present for the trading in such security on the exchange that he is presenting an order for the account of a member; and (3) notwithstanding rules of priority, parity, and precedence otherwise applicable, any member presenting for execution a bid or offer for its own account or for the account of another member must grant priority to any bid or offer at the same price for the account of a person who is not, or is not associated with, a member, irrespective of the size of any such bid or offer or the time when entered. *See* 17 CFR 240.11a1–1(T)(a)(1)–(3).

[20] In its proposal, the Exchanges note that Section 11(a)(1)(G) of the Act does not require better-priced G orders to yield. *See* Notices, 77 FR at 40135 and 40131. *See also* 17 CFR 240.11a1–1(T)(a)(3), which requires that a ''member presenting for execution a bid or offer for its own account or for the account of another member shall grant priority to any bid or offer at the same price for the account of a person who is not, or is not associated with, a member irrespective of the size of any such bid or offer or the time when entered.'' The priority of G orders with a price equal to the closing price in relation to other ''may execute'' interest will remain unchanged under the proposal.

[21] 15 U.S.C. 78k(a)(1)(G).

[22] 17 CFR 240.11a1–1(T). The Commission notes that this exemption is available only for orders for the account of Exchange members. The Commission also reminds the Exchanges and their members that, in addition to yielding priority to non-member orders at the same price, members submitting ''G orders'' must also meet the other requirements under section 11(a)(1)(G) and Rule 11a1–1(T) to effect transactions for their own accounts in reliance on this exception (or satisfy the requirements of another exception).

[23] 15 U.S.C. 78s(b)(2).

[24] 17 CFR 200.30–3(a)(12).

SECURITIES AND EXCHANGE COMMISSION

[Release No. 34–67696; File No. SR–ICC–2012–12]

Self-Regulatory Organizations; ICE Clear Credit LLC; Notice of Filing of Proposed Rule Change To Amend Schedule 502 of the ICE Clear Credit Rules To Provide for Clearing of Additional Single Name Investment Grade CDS Contracts

August 20, 2012.

Pursuant to Section 19(b)(1) of the Securities Exchange Act of 1934 (''Act'')[1] and Rule 19b–4 thereunder[2] notice is hereby given that on August 9, 2012, ICE Clear Credit LLC (''ICC'') filed with the Securities and Exchange Commission (''Commission'') the proposed rule change as described in Items I, II, and III below, which Items have been prepared primarily by ICC. The Commission is publishing this notice to solicit comments on the proposed rule change from interested persons.

I. Self-Regulatory Organization's Statement of the Terms of Substance of the Proposed Rule Change

The purpose of proposed rule change is to provide for the clearance of the following twenty additional investment grade Standard North American Corporate Single Name CDS contracts: Nucor Corporation; V.F. Corporation; The Procter & Gamble Company; Encana Corporation; Weatherford International Ltd.; Chevron Corporation; Nexen Inc.; Energy Transfer Partners, L.P.; Apache Corporation; Kimco Realty Corporation; Prudential Financial, Inc.; Prologis, L.P.; HCP, Inc.; Lincoln National Corporation; The Travelers Companies, Inc.; Textron Financial Corporation; Textron Inc.; The Williams Companies, Inc.; Pacific Gas and Electric Company; and Starwood Hotels & Resorts Worldwide, Inc. (the ''Additional Single Names'').

II. Self-Regulatory Organization's Statement of the Purpose of, and Statutory Basis for, the Proposed Rule Change

In its filing with the Commission, ICC included statements concerning the purpose of and basis for the proposed rule change and discussed any comments it received on the proposed rule change. The text of these statements may be examined at the places specified in Item IV below. ICC has prepared summaries, set forth in sections (A), (B), and (C) below, of the most significant aspects of these statements.[3]

(A) Self-Regulatory Organization's Statement of the Purpose of, and Statutory Basis for, the Proposed Rule Change

As with the Standard North American Corporate Single Names currently cleared, ICC plans to provide for the clearance of contracts with a restructuring type of no restructuring, standardized maturity dates up to the 10-year tenor and both standardized coupons. One of the Additional Single Names (Starwood Hotels & Resorts Worldwide, Inc.) was recently added by Markit as one of the one hundred

[1] 15 U.S.C. 78s(b)(1).

[2] 17 CFR 240.19b–4.

[3] The Commission has modified the text of the summaries prepared by ICC.

twenty-five single constituents of its Markit CDX North American Investment Grade Series 18 Index, and is not currently being cleared by ICC. Another of the Additional Single Names (Textron Financial Corporation) is a constituent of the Series 8 through 12 of the Markit CDX North American Investment Grade Index, and has not been cleared previously by ICC. All other Additional Single Names are not constituents of Series 8 through 18 of the Markit CDX North American Investment Grade Index. The Additional Single Names do not require any changes to the body of the ICC Rules. ICC will clear the Additional Single Names pursuant to ICC's existing Rules. The Additional Single Names do not require any changes to the ICC risk management framework including the ICC margin methodology, guaranty fund methodology, pricing parameters, or pricing model. The only change being submitted is the inclusion of the Additional Single Names to Schedule 502 of the ICC Rules. The Additional Single Names have been reviewed by the ICC Risk Department, the ICC Trading Advisory Committee, and the ICC Risk Committee.

ICC believes that the clearing of the Additional Single Names is consistent with the purposes and requirements of Section 17A of the Act [4] and the rules and regulations thereunder applicable to ICC because it will facilitate the prompt and accurate settlement of security-based swaps and contribute to the safeguarding of securities and funds associated with security-based swap transactions.

Self-Regulatory Organization's Statement on Burden on Competition

ICC does not believe the proposed rule change would have any impact, or impose any burden, on competition.

(C) Self-Regulatory Organization's Statement on Comments on the Proposed Rule Change Received From Members, Participants or Others

Written comments relating to the proposed rule change have not been solicited or received. ICC will notify the Commission of any written comments received by ICC.

III. Date of Effectiveness of the Proposed Rule Change and Timing for Commission Action

Within 45 days of the date of publication of this notice in the **Federal Register** or within such longer period up to 90 days (i) as the Commission may designate if it finds such longer period to be appropriate and publishes its reasons for so finding or (ii) as to which the self-regulatory organization consents, the Commission will:

(A) By order approve or disapprove the proposed rule change; or

(B) institute proceedings to determine whether the proposed rule change should be disapproved.

IV. Solicitation of Comments

Interested persons are invited to submit written data, views, and arguments concerning the foregoing, including whether the proposed rule change is consistent with the Act. Comments may be submitted by any of the following methods:

Electronic Comments

- Use the Commission's Internet comment form (*http://www.sec.gov/rules/sro.shtml§*); or
- Send an email to *rule-comments@sec.gov*. Please include File Number SR–ICC–2012–12 on the subject line.

Paper Comments

- Send paper comments in triplicate to Elizabeth M. Murphy, Secretary, Securities and Exchange Commission, 100 F Street NE., Washington, DC 20549–1090.

All submissions should refer to File Number SR–ICC–2012–12. This file number should be included on the subject line if email is used. To help the Commission process and review your comments more efficiently, please use only one method. The Commission will post all comments on the Commission's Internet Web site (*http://www.sec.gov/rules/sro.shtml§*). Copies of the submission, all subsequent amendments, all written statements with respect to the proposed rule change that are filed with the Commission, and all written communications relating to the proposed rule change between the Commission and any person, other than those that may be withheld from the public in accordance with the provisions of 5 U.S.C. 552, will be available for Web site viewing and printing in the Commission's Public Reference Section, 100 F Street NE., Washington, DC 20549, on official business days between the hours of 10:00 a.m. and 3:00 p.m. Copies of such filings will also be available for inspection and copying at the principal office of ICC and on ICC's Web site at *https://www.theice.com/publicdocs/regulatory_filings/ICEClearCredit_080912.pdf*.

All comments received will be posted without change; the Commission does not edit personal identifying information from submissions. You should submit only information that you wish to make available publicly. All submissions should refer to File Number SR–ICC–2012–12 and should be submitted on or before September 14, 2012.

For the Commission by the Division of Trading and Markets, pursuant to delegated authority.[5]

Elizabeth M. Murphy,

Secretary.

[FR Doc. 2012–20823 Filed 8–23–12; 8:45 am]

BILLING CODE 8011–01–P

[4] 15 U.S.C. 78q–1.

[5] 17 CFR 200.30–3(a)(12).

SECURITIES AND EXCHANGE COMMISSION

[Release No. 34–67692; File No. SR–ICC–2012–13]

Self-Regulatory Organizations; ICE Clear Credit LLC; Notice of Filing and Immediate Effectiveness of Proposed Rule Change To Amend Schedule 502 of the ICC Rules To Provide for Clearing of Additional Markit CDX North American Investment Grade Indices

August 20, 2012.

Pursuant to Section 19(b)(1) of the Securities Exchange Act of 1934 (''Act'') [1] and Rule 19b–4 thereunder [2] notice is hereby given that on August 10, 2012, ICE Clear Credit LLC (''ICC'') filed with the Securities and Exchange Commission (''Commission'') the proposed rule change as described in Items I, II and III below, which Items have been prepared primarily by ICC. ICC filed the proposed rule change pursuant to Section 19(b)(3)(A) [3] of the Act and Rule 19b–4(f)(4)(ii) [4] thereunder, so that the proposed rule change was effective upon filing with the Commission. The Commission is publishing this notice to solicit comments on the proposed rule change from interested parties.

I. Self-Regulatory Organization's Statement of Terms of Substance of the Proposed Rule Change

The purpose of proposed rule change is to provide for the clearance of the following credit default swaps: Markit CDX North American Investment Grade Series 11 Index with a seven year maturity, maturing on December 20, 2015, Markit CDX North American Investment Grade Series 12 Index with

[1] 15 U.S.C. 78s(b)(1).

[2] 17 CFR 240.19b–4.

[3] 15 U.S.C. 78s(b)(3)(A).

[4] 17 CFR 240.19b–4(f)(4)(ii).

a seven year maturity, maturing on June 20, 2016, Markit CDX North American Investment Grade Series 13 Index with a three year maturity, maturing on December 20, 2012, Markit CDX North American Investment Grade Series 13 Index with a seven year maturity, maturing on December 20, 2016, Markit CDX North American Investment Grade Series 14 Index with a three year maturity, maturing on June 20, 2013, Markit CDX North American Investment Grade Series 14 Index with a seven year maturity, maturing on June 20, 2017, Markit CDX North American Investment Grade Series 15 Index with a three year maturity, maturing on December 20, 2013, Markit CDX North American Investment Grade Series 15 Index with a seven year maturity, maturing on December 20, 2017, Markit CDX North American Investment Grade Series 16 Index with a three year maturity, maturing on June 20, 2014, Markit CDX North American Investment Grade Series 16 Index with a seven year maturity, maturing on June 20, 2018, Markit CDX North American Investment Grade Series 17 Index with a three year maturity, maturing on December 20, 2014, Markit CDX North American Investment Grade Series 17 Index with a seven year maturity, maturing on December 20, 2018, Markit CDX North American Investment Grade Series 18 Index with a three year maturity, maturing on June 20, 2015, and Markit CDX North American Investment Grade Series 18 Index with a seven year maturity, maturing on June 20, 2019 (the ''Additional Indices''). ICC currently clears Markit CDX North American Investment Grade Indices with five, seven and ten year maturities. The Additional Indices do not require any changes to the body of the ICC Rules. ICC will clear the Additional Indices pursuant to ICC's existing Rules. Also, clearing the Additional Indices does not require any changes to the ICC risk management framework including the ICC margin methodology, guaranty fund methodology, pricing parameters and pricing model. The only change relates to the inclusion of the Additional Indices in Schedule 502 of the ICC Rules.

II. Self-Regulatory Organization's Statement of Purpose of, and Statutory Basis for, the Proposed Rule Change

In its filing with the Commission, ICC included statements concerning the purpose and basis for the proposed rule change and discussed any comments it received on the proposed rule change. The text of these statements may be examined at the places specified in Item IV below. ICC has prepared summaries, set forth in sections A, B, and C below, of the most significant aspects of such statements.

A. Self-Regulatory Organization's Statement of Purpose of, and Statutory Basis for, the Proposed Rule Change

ICC believes that the clearing of the Additional Index will facilitate the prompt and accurate settlement of swaps and contribute to the safeguarding of securities and funds associated with swap transactions.

B. Self-Regulatory Organization's Statement on Burden on Competition

ICC does not believe that the proposed rule change will have any impact, or impose any burden, on competition.

C. Self-Regulatory Organization's Statement on Comments on the Proposed Rule Change Received From Members, Participants, or Others

ICC has not solicited, and does not intend to solicit, comments regarding this proposed rule change. ICC will notify the Commission of any written comments received by ICC.

III. Date of Effectiveness of the Proposed Rule Change and Timing for Commission Action

The foregoing rule change was filed pursuant to Section 19(b)(3)(A) [5] of the Act and Rule 19b–4(f)(4)(ii) [6] thereunder and thus became effective upon filing because it effects a change in an existing service of a registered clearing agency that primarily affects the futures clearing operations of the clearing agency with respect to futures that are not security futures and does not significantly affect any securities clearing operations of the clearing agency or any related rights or obligations of the clearing agency or persons using such service. At any time within sixty days of the filing of such rule change, the Commission summarily may temporarily suspend such rule change if it appears to the Commission that such action is necessary or appropriate in the public interest, for the protection of investors, or otherwise in furtherance of the purposes of the Act.

IV. Solicitation of Comments

Interested persons are invited to submit written data, views and arguments concerning the foregoing, including whether the proposed rule change is consistent with the Act. Comments may be submitted by any of the following methods:

Electronic Comments

- Use the Commission's Internet comment form (*http://www.sec.gov/rules/sro.shtml*); or
- Send an email to *rule-comments@sec.gov.* Please include File No. SR–ICC–2012–13 on the subject line.

Paper Comments

- Send in triplicate to Elizabeth M. Murphy, Secretary, Securities and Exchange Commission, 100 F Street NE., Washington, DC 20549–1090.

All submissions should refer to File Number SR–ICC–2012–13. This file number should be included on the subject line if email is used. To help the Commission process and review your comments more efficiently, please use only one method. The Commission will post all comments on the Commission's Internet Web site (*http://www.sec.gov/rules/sro.shtml*). Copies of the submission, all subsequent amendments, all written statements with respect to the proposed rule change that are filed with the Commission, and all written communications relating to the proposed rule change between the Commission and any person, other than those that may be withheld from the public in accordance with the provisions of 5 U.S.C. 552, will be available for Web site viewing and printing in the Commission's Public Reference Room, 100 F Street NE., Washington, DC 20549 on official business days between the hours of 10 a.m. and 3 p.m. Copies of such filings will also be available for inspection and copying at the principal office of ICE Clear Credit and on ICE Clear Credit's Web site at *https://www.theice.com/publicdocs/regulatory_filings/ICEClearCredit_080912a.pdf.*

All comments received will be posted without change; the Commission does not edit personal identifying information from submissions. You should submit only information that you wish to make available publicly. All submissions should refer to File Number SR–ICC–2012–13 and should be submitted on or before September 14, 2012.

[5] 15 U.S.C. 78s(b)(3)(A).

[6] 17 CFR 240.19b–4(f)(4)(ii).

For the Commission, by the Division of Trading and Markets, pursuant to delegated authority.[7]

Elizabeth M. Murphy,

Secretary.

[FR Doc. 2012–20822 Filed 8–23–12; 8:45 am]

BILLING CODE 8011–01–P

SECURITIES AND EXCHANGE COMMISSION

[Release No. 34–67685; File No. SR–BATS–2012–023]

Self-Regulatory Organizations; BATS Exchange, Inc.; Order Granting Approval of a Proposed Rule Change to Amend BATS Rules 14.2 and 14.3 To Adopt Additional Listing Requirements for Reverse Merger Companies and To Align BATS Rules With the Rules of Other Self-Regulatory Organizations

August 17, 2012.

I. Introduction

On June 15, 2012, BATS Exchange, Inc. (''BATS'' or ''Exchange'') filed with the Securities and Exchange Commission (''Commission''), pursuant to Section 19(b)(1) of the Securities Exchange Act of 1934 (''Exchange Act'') [1] and Rule 19b–4 thereunder,[2] a proposed rule change to amend BATS Rules 14.2 and 14.3 to adopt additional listing requirements for companies that become a reporting company under the Exchange Act by combining with a public shell, whether through a reverse merger, exchange offer, or otherwise (a ''Reverse Merger'') and to align BATS Rules with the rules of other self-regulatory organizations. The proposed rule change was published for comment in the **Federal Register** on July 5, 2012.[3] The Commission received no comments on the proposed rule change. This order approves the proposed rule change.

II. Description of the Proposal

BATS proposed to adopt more stringent listing requirements for operating companies that become Exchange Act reporting companies through a Reverse Merger. In a Reverse Merger, an existing public shell company merges with a private operating company in a transaction in which the shell company is the surviving legal entity.

Significant regulatory concerns, including accounting fraud allegations, have arisen with respect to a number of Reverse Merger companies in recent times. The Commission has taken direct action against Reverse Merger companies. During 2011, the Commission suspended trading in, and revoked the securities registration of, a number of Reverse Merger companies.[4] The Commission also brought an enforcement proceeding against an audit firm relating to its work for Reverse Merger companies.[5] In addition, the Commission issued a bulletin on the risks of investing in Reverse Merger companies, noting potential market and regulatory risks related to investing in Reverse Merger companies.[6]

In light of the well-documented concerns related to some Reverse Merger companies described above, BATS stated its belief that it is appropriate to codify in its rules specific requirements with respect to the initial listing qualification of Reverse Merger companies. As proposed, a Reverse Merger company would not be eligible for listing unless the combined entity had, immediately preceding the filing of the initial listing application:

(1) Traded for at least one year in the U.S. over-the-counter market, on another national securities exchange, or on a regulated foreign exchange following the consummation of the Reverse Merger and (i) in the case of a domestic issuer, filed with the Commission a form 8–K including all of the information required by Item 2.01(f) of Form 8–K, including all required audited financial statements; or (ii) in the case of a foreign private issuer, filed the information described in (i) above on Form 20–F;

(2) Maintained on both an absolute and an average basis for a sustained period a minimum stock price of at least $4, but in no event for less than 30 of the most recent 60 trading days prior to each of the filing of the initial listing application and the date of the Reverse Merger company's listing on the Exchange, except that a Reverse Merger company that has satisfied the one-year trading requirement described in paragraph (1) above and has filed at least four annual reports with the Commission which each contain all required audited financial statements for a full fiscal year commencing after filing the information described in paragraph (1) above will not be subject to this price requirement; and

(3) Timely filed with the Commission all required reports since the consummation of the Reverse Merger, including the filing of at least one annual report containing audited financial statements for a full fiscal year commencing on a date after the date of filing with the Commission of the filing described in paragraph (1) above.

In addition, a Reverse Merger company would be required to maintain on both an absolute and an average basis a minimum stock price of at least $4 through listing.

BATS stated that requiring a ''seasoning'' period prior to listing for Reverse Merger companies should provide great assurance that the company's operations and financial reporting are reliable, and will also provide time for its independent auditor to detect any potential irregularities, as well as for the company to identify and implement enhancements to address any internal control weaknesses. The seasoning period would also provide time for regulatory and market scrutiny of the company and for any concerns that would preclude listing eligibility to be identified.

BATS stated its belief that the proposed rule change would increase transparency to issuers and market participants with respect to the factors considered by the Exchange in assessing Reverse Merger companies for listing and should generally reduce the risk of regulatory concerns with respect to these companies being discovered after listing. BATS further noted that, while it believes that the proposed requirements would be a meaningful additional safeguard, it is not possible to guarantee that a Reverse Merger company (or any other listed company) is not engaged in undetected accounting fraud or subject to other concealed and undisclosed legal or regulatory problems.

For purposes of the proposal amending BATS Rules 14.2(c) and 14.3(b)(9) (which will both be applicable to Reverse Merger companies which qualify to list under BATS Rules) and as defined above, a Reverse Merger would mean any transaction whereby an operating company became an Exchange Act reporting company by combining either directly or indirectly with a shell company that was an Exchange Act reporting company, whether through a Reverse Merger, exchange offer, or otherwise. However, a Reverse Merger would not include the acquisition of an operating company by a listed company that qualified for initial listing under BATS Rule 14.2(b) (the Exchange's standard for companies whose business plan is to complete one or more acquisitions). In determining whether a company was a shell company, BATS would consider, among other factors:

[7] 17 CFR 200.30–3(a)(12).

[1] 15 U.S.C. 78s(b)(1).

[2] 17 CFR 240.19b–4.

[3] *See* Securities Exchange Act Release No. 67304 (June 28, 2012), 77 FR 39781 (''Notice'').

[4] *See* Letter from Mary L. Schapiro to Hon. Patrick T. McHenry, dated April 27, 2011 (''Schapiro Letter''), at pages 3–4.

[5] *See* Schapiro Letter at page 4.

[6] *See* ''Investor Bulletin: Reverse Mergers'' 2011–123.

whether the company was considered a ''shell company'' as defined in Rule 12b–2 under the Exchange Act; what percentage of the company's assets were active versus passive; whether the company generates revenues, and if so, whether the revenues were passively or actively generated; whether the company's expenses were reasonably related to the revenues being generated; how many employees worked in the company's revenue-generating business operations; how long the company had been without material business operations; and whether the company had publicly announced a plan to begin operating activities or generate revenues, including through a near-term acquisition or transaction.

In order to qualify for initial listing, a Reverse Merger company would be required to comply with one of the initial listing standards set forth in BATS Rule 14.4 or 14.5 and the stock price and market value requirements of BATS Rule 14.8 or 14.9, as appropriate. Proposed Rules 14.2(c)(3) and 14.3(b)(9) would supplement and not replace any applicable requirements of Chapter XIV of BATS Rules. In addition to the otherwise applicable requirements of BATS Rules, a Reverse Merger company would be eligible to submit an application for an initial listing only if it meets the additional criteria specified above.

BATS would continue to have the discretion to impose more stringent requirements than those set forth above if the Exchange believed that it was warranted in the case of a particular Reverse Merger company, based on, among other things, an inactive trading market in the Reverse Merger company's securities, the existence of a low number of publicly held shares that were not subject to transfer restrictions, if the Reverse Merger company had not had a Securities Act registration statement or other filing subjected to a comprehensive review by the Commission, or if the Reverse Merger company had disclosed that it had material weaknesses in its internal controls which had been identified by management and/or the Reverse Merger company's independent auditor and had not yet implemented an appropriate corrective action plan.

BATS further stated that any Reverse Merger company would have to comply with all listing standards set forth in BATS Rules, including corporate governance standards. BATS also noted that it would monitor the compliance with applicable BATS Rules by any Reverse Merger company and would investigate any issues that indicate that a Reverse Merger company is non-compliant with BATS Rules.

A Reverse Merger company would not be subject to the requirements of proposed BATS Rules 14.2(c)(3) and 14.3(b)(9) if, in connection with its listing, it completes a firm commitment underwritten public offering where the gross proceeds to the Reverse Merger company will be at least $40 million.[7] In that case, the Reverse Merger company would only need to meet the initial listing standards. BATS stated that it believes that it is appropriate to exempt Reverse Merger companies from the proposed rule where they are listing in conjunction with a sizable offering, as those companies would be subject to the same Commission review and due diligence by underwriters as a company listing in conjunction with its IPO or any other company listing in conjunction with an initial firm commitment underwritten public offering, so it would be inequitable to subject them to more stringent requirements.

BATS further noted that the proposal is based on and consistent with recent Commission approvals of analogous rules for the New York Stock Exchange LLC (''NYSE''), NYSE Amex LLC (''AMEX'') and the NASDAQ Stock Market LLC (''Nasdaq'').[8]

III. Discussion and Commission Findings

The Commission has carefully reviewed the proposed rule change and finds that it is consistent with the requirements of the Act and the rule and regulations thereunder applicable to a national securities exchange,[9] and, in particular, Section 6(b)(5) of the Act,[10] which, among other things, requires that the rules of a national securities exchange be designed to prevent fraudulent and manipulative acts and practices, to promote just and equitable principles of trade, to foster cooperation and coordination with persons engaged in regulating, clearing, settling, processing information with respect to, and facilitating transactions in securities, to remove impediments to and perfect the mechanism of a free and open market and a national market system, and, in general, to protect investors and the public interest.

The development and enforcement of meaningful listing standards for an exchange is of substantial importance to financial markets and the investing public. Among other things, listing standards provide the means for an exchange to screen issuers that seek to become listed, and to provide listed status only to those that are bona fide companies with sufficient public float, investor base, and trading interest likely to generate depth and liquidity sufficient to promote fair and orderly markets. Meaningful listing standards also are important given investor expectations regarding the nature of securities that have achieved an exchange listing, and the role of an exchange in overseeing its market and assuring compliance with its listing standards.

BATS proposed to make more rigorous its listing standards for Reverse Merger companies, given the significant regulatory concerns, including accounting fraud allegations, that have recently arisen with respect to these companies. As noted above, the Commission previously approved similar filings by Nasdaq, NYSE and NYSE Amex.[11] The proposal, and those previously filed by Nasdaq, NYSE and NYSE Amex, among other things, are intended to improve the reliability of the reported financial results of Reverse Merger companies by requiring a pre-listing ''seasoning period'' during which the post-merger public company would have produced financial and other information in connection with its required Commission filings. The current proposal is also intended to address concerns that some might attempt to meet the minimum price test required for exchange listing through a quick manipulative scheme in the securities of a Reverse Merger company, by requiring that minimum price to be sustained for a meaningful period of time.

The Commission believes the proposed one-year seasoning requirement for Reverse Merger companies that seek to list on the Exchange is reasonably designed to address concerns that the potential for accounting fraud and other regulatory issues is more pronounced for this type of issuer. As discussed above, these additional listing requirements will assure that a Reverse Merger company has produced and filed with the Commission at least one full year of all

[7] The prospectus and registration statement covering the offering would thus need to relate to the combined financial statements and operations of the Reverse Merger Company.

[8] *See* Securities Exchange Act Release Nos. 65709 (November 8, 2011), 76 FR 70795 (November 15, 2011) (File No. SR–NYSE–2011–38); 65710 (November 8, 2011), 76 FR 70790 (November 15, 2011) (File No. SR–NYSEAmex–2011–55); 65708 (November 8, 2011), 76 FR 70799 (November 15, 2011) (File No. SR–NASDAQ–2011–073).

[9] In approving this proposed rule change, the Commission has considered the proposed rule's impact on efficiency, competition, and capital formation. *See* 15 U.S.C. 78c(f).

[10] 15 U.S.C. 78f(b)(5).

[11] *See supra* note 8.

required audited financial statements following the Reverse Merger transaction before it is eligible to list on BATS. The Reverse Merger company also must have filed all required Commission reports since the consummation of the Reverse Merger, which should help assure that material information about the issuer have been filed with the Commission and that the issuer has a demonstrated track record of meeting its Commission filing and disclosure obligations. In addition, the requirement that the Reverse Merger company has traded for at least one year in the over-the-counter market or on another exchange could make it more likely that analysts have followed the company for a sufficient period of time to provide an additional check on the validity of the financial and other information made available to the public.

The Commission also believes the proposed requirement for a Reverse Merger company to maintain the specified minimum share price for a sustained period, and for at least 30 of the most recent 60 trading days, prior to the date of the initial listing application and the date of listing, is reasonably designed to address concerns that the potential for manipulation of the security to meet the minimum price requirements is more pronounced for this type of issuer. By requiring that minimum price to be maintained for a meaningful period of time, the proposal should make it more difficult for a manipulative scheme to be successfully used to meet the Exchange's minimum share price requirements.

In addition, the Commission believes that the proposed exceptions to the enhanced listing requirements for Reverse Merger companies that (1) complete a substantial firm commitment underwritten public offering in connection with its listing, or (2) have filed at least four annual reports containing all required audited financial statements with the Commission following the filing of all required information about the Reverse Merger transaction, and satisfying the one-year trading requirement, reasonably accommodate issuers that may present a lower risk of fraud or other illegal activity. The Commission believes it is reasonable for the Exchange to conclude that, although formed through a Reverse Merger, an issuer that (1) undergoes the due diligence and vetting required in connection with a sizeable underwritten public offering, or (2) has prepared and filed with the Commission four years of all required audited financial statements following the Reverse Merger, presents less risk and warrants the same treatment as issuers that were not formed through a Reverse Merger. Nevertheless, the Commission expects the Exchange to monitor any issuers that qualify for these exceptions and, if fraud or other abuses are detected, to propose appropriate changes to its listing standards.

For the reasons discussed above, the Commission believes that BATS's proposal will further the purposes of Section 6(b)(5) of the Act by, among other things, helping prevent fraud and manipulation associated with Reverse Merger companies, and protecting investors and the public interest.

IV. Conclusion

It is therefore ordered, pursuant to Section 19(b)(2) of the Act, that the proposed rule change (SR–BATS–2012–023) is approved.

For the Commission, by the Division of Trading and Markets, pursuant to delegated authority.[12]

Elizabeth M. Murphy,

Secretary.

[FR Doc. 2012–20818 Filed 8–23–12; 8:45 am]

BILLING CODE 8011–01–P

[12] 17 CFR 200.30–3(a)(12).

DEPARTMENT OF STATE

[Public Notice 7990]

Certification Related to the Khmer Rouge Tribunal

Pursuant to the authority vested in me under Section 7044(c) of the Department of State, Foreign Operations, and Related Programs Appropriations Act, 2012 (Division I, Pub. L. 112–74) (SFOAA) and Delegation of Authority 245–1, I hereby certify that that the United Nations and Government of Cambodia are taking credible steps to address allegations of corruption and mismanagement within the Extraordinary Chambers in the Courts of Cambodia (also known as the ''Khmer Rouge Tribunal'').

This Certification shall be published in the **Federal Register**, and sent, along with related Memorandum of Justification, to the appropriate committees of the Congress.

Dated: August 13, 2012.

Thomas R. Nides,

Deputy Secretary for Management and Resources.

Section 7044(c) of the Department of State, Foreign Operations Appropriations Act, 2012 (Div. I, Pub. L. 112–74)

Funding for the Extraordinary Chambers in the Courts of Cambodia

Sec. 7044(c) Cambodia.—Funds made available in this Act for a United States contribution to a Khmer Rouge tribunal may only be made available if the Secretary of State certifies to the Committees on Appropriations that the United Nations and the Government of Cambodia are taking credible steps to address allegations of corruption and mismanagement within the tribunal.

Memorandum of Justification for Certification Related to the Khmer Rouge Tribunal Under Section 7044(C) Of the Department of State, Foreign Operations and Related Programs Appropriations Act, 2012

Section 7044(c) of the Department of State, Foreign Operations and Related Program Appropriations Act, 2012 (Div. I Pub. L. 112–74), provides that funds appropriated by that act for a United States contribution to the Extraordinary Chambers in the Courts of Cambodia (ECCC, also known as the Khmer Rouge Tribunal) may only be made available if the Secretary of State certifies to the Committees on Appropriations that the United Nations (UN) and Royal Government of Cambodia (RGC) are taking credible steps to address allegations of corruption and mismanagement within the ECCC. Deputy Secretary Nides has signed the certification pursuant to State Department Delegation of Authority 245–1.

Background

The ECCC, which began operations in 2006, was established as a national court with UN assistance to bring to justice senior leaders and those most responsible for the deaths of as many as two million Cambodians under the Khmer Rouge regime, which was in power from April 17, 1975 until January 6, 1979. In 2010, the ECCC completed its first case (Case 001), convicting Kaing Guek Eav (aka ''Duch''), former chief of the Tuol Sleng torture center, of crimes against humanity and war crimes, and sentenced him to 35 years in prison. Duch's trial was the first attempt in three decades to hold a Khmer Rouge official accountable for that era's atrocities and was a milestone in the history of Cambodian justice. In

February, 2012 the ECCC's Supreme Chamber upheld that conviction, and extended Duch's sentence to life in prison. The United States, other foreign governments, and non-governmental organizations (NGOs) monitoring the ECCC agree that proceedings throughout met international standards of justice. In September, 2010, the four surviving senior leaders of the Khmer Rouge, including Nuon Chea (''Brother Number 2''), were indicted on a variety of charges (''Case 002''), including crimes against humanity, grave breaches of the Geneva Convention, and genocide. The trial commenced in November 2011. In response to pre-trial motions, Ms. Ieng Thirith, the Khmer Rouge's Minister of Social Affairs, was found mentally incompetent to stand trial. She has not been released from custody, as treatment is underway to see if her condition can be sufficiently improved to allow her to stand trial. Investigations by the ECCC's Office of the Co-Investigating Judges commenced in September, 2009 against three suspects (''Case 003'') and no final decision has been made regarding the legal question of whether the suspects and their alleged crimes fall within the jurisdiction of the ECCC. Two additional suspects (''Case 004'') are also being investigated.

Factors Justifying Certification

From the time the ECCC commenced operations in 2006, there have been allegations of corruption on the administrative side of the court, primarily in the form of salary kickback schemes affecting Cambodian staff members. These allegations received widespread attention from U.S. and international media, and concerns about corruption led many to question the ECCC's ability to deliver justice. In late 2008, at the request of the United States and other donors, the RGC removed the Cambodian head of administration, the person most associated with the corruption scheme. His replacement, Tony Kranh, who remains the Acting Director today, has been competent and has cooperated well with the donor community, the ECCC officials, and the UN Office of Legal Affairs.

The ECCC, in cooperation with the UN, has taken additional steps to protect the integrity of its proceedings against corruption. In August 2009 the UN and RGC reached an agreement to establish an Independent Counselor, which is semi-autonomous from the Tribunal's administration, the UN, the RGC and donor states, to hear and address corruption allegations at ECCC. The guidelines established confirm the Independent Counselor's obligations to protect the confidentiality of complainants, ensure that there are no reprisals for whistle-blowing, and provide a report of his activities to both the UN and RGC. Addressing the ECCC in October 2010, the Secretary General commended the work of the Independent Counselor and the effect that office has on the public perception of the ECCC—that the Tribunal's administration will not tolerate any form of corruption.

These steps have led to increased confidence in the ECCC. The Human Rights Center of the University of California Berkeley conducted a survey in December 2010 across 125 Cambodian communes nationwide. The Center's final report, released on June 9, 2011, reveals that an increasing number of Cambodians have confidence in the court. A recent poll by the International Republican Institute found that 77 percent of Cambodians were aware of the proceedings at the ECCC.

Donor States, NGOs, and other monitors of the ECCC have expressed increased confidence in the proceedings as well. The Secretary General stated in the fall of 2010 that ''Beyond all doubt, the court has shown that it is capable of prosecuting complex international crimes in accordance with international standards.'' In a resolution adopted at its 18th session (September 2011), the Human Rights Council reaffirmed the importance of the ECCC as an independent and impartial body, and welcomed the assistance of member states and the efforts of the Cambodian government to work with the UN to ensure the highest standards of administration are met.

In July 2010, the UN established the office of the Special Expert to the Secretary-General of the ECCC to provide advice and assistance to successfully managing this high-profile war crimes tribunal. In furtherance of this mandate, the Special Expert is tasked with monitoring, reporting, and addressing any and all administrative issues related to the ECCC's functioning. The position was held from July 2010 to October 2011 by J. Clint Williamson, U.S. Ambassador-at-Large for War Crimes Issues from 2006–2009. Williamson was succeeded in January 2012 by David Scheffer, himself also a former Ambassador-at-Large for War Crimes Issues (1997–2001).

The ECCC provides a monthly report to the UN Controller and the UN Department of Economic and Social Affairs, which closely monitors the Tribunal's activities, including its expenditures. In addition, all hiring on the international side of the ECCC is vetted by the UN Department of Economic and Social Affairs. The UN Office of Legal Affairs actively engages on judicial management issues. For example, the ECCC accepted the UN's recommendation that the Pre-Trial Chamber sit on a full-time basis in order to improve the ECCC's efficiency and to expedite its decision-making.

Since the appointment of the new ECCC administration, the creation of the Independent Counselor position, and the establishment of the UN's Special Expert Office, the United States has not learned of any credible allegations of corruption or mismanagement within the ECCC. Developments in Cases 003 and 004, while not related to corruption or mismanagement, do warrant examination.

In late April 2011, the ECCC's Office of Co-Investigating Judges (OCIJ)—at the time led by Cambodian national You Bunleng and German national Siegfried Blunk—ended its investigation into Case 003 and forwarded the evidence to the Office of the Co-Prosecutors. The international co-prosecutor, Andrew Cayley, dissatisfied with the amount and depth of evidence, requested the OCIJ to conduct further investigations and publicly released his request for additional investigation. This action led to a response from the OCIJ that appeared to threaten Cayley with contempt for publicizing confidential matters. While the OCIJ subsequently made it clear that it did not seek to sanction Cayley, it also disagreed with Mr. Cayley's legal position and defended the adequacy of its factual investigations. While no closing order recommending dismissal was ever filed, ECCC's observers assess that the OCIJ supported dismissing the suspects from further investigation. Mr. Blunk came under intense criticism from outside observers and by some of his own office for his handling of Case 003, and a prominent international NGO alleged mismanagement and possibly misconduct. However, neither the NGO, nor missions by the UN's Office of Human Resource Management nor any other source has produced evidence that substantiates this allegation. Nevertheless, under increasing pressure, Mr. Blunk announced his resignation October 10, 2011, claiming that he was unable to carry out his duties due to political interference by the RGC.

It was expected that Mr. Blunk would be succeeded by Mr. Laurent Kasper-Ansermet of Switzerland, whom the UN had previously nominated and confirmed as the reserve co-investigative judge. It was the UN's legal view that Kasper-Ansermet's accession was to have been automatic. However, citing statements Mr. Kasper-Ansermet

has published on Twitter prior to his nomination, the RGC refused to confirm him. After attempting to exercise his duties as reserve co-investigating judge for six months, Mr. Kasper-Ansermet tendered his resignation on March 19, 2012 citing his inability to gain the cooperation of the Cambodian national co-investigating judge, Mr. You Bunleng. Mr. Kasper-Ansermet's resignation was effective May 4, 2012. To replace Kasper-Ansermet, the UN nominated U.S. citizen Mark Harmon, a retired career U.S. Department of Justice prosecutor, who also served more than a decade as a Senior Trial Attorney in the Office of the Prosecutor of the International Criminal Tribunal for the former Yugoslavia (ICTY). Unlike Kasper-Ansermet, the Cambodian Supreme Council of the Magistracy (SCM) confirmed Harmon in the position.

The ECCC's jurisdiction over suspects in the Cases 003/004 has yet to be resolved; and therefore the co-investigating judges have not made a final determination on whether these individuals should be indicted. Should the national and international co-investigating judges disagree, there is a formal process under the governing documents of the ECCC for resolving this disagreement in the Pre-Trial Chamber.

Before his departure, Kasper-Ansermet complained publicly that his investigation of Cases 003/004 has been obstructed by the non-cooperation of Cambodian-appointed judges and officials. Judge Bunleng publicly responded that the difficulties had arisen because Kasper-Ansermet had not been confirmed in his appointment due to the latter's public comments on confidential judicial matters. As Mark Harmon's nomination has been confirmed by the SCM, we anticipate that he will receive appropriate cooperation from national and international judges and officials. There may be disagreements about whether the suspects in Cases 003/004 should be subject to indictment and trial, but we expect these matters to be resolved by the co-investigative judges and the Pre-Trial Chamber in accordance with applicable law and procedure.

Certification and United States Policy Objectives

Certification recognizes the efforts of the UN and RGC to address allegations of corruption and mismanagement within the ECCC. It is not an indication, however, that work is complete. Both parties must continue to exercise oversight of the ECCC's operations, and the donor community and NGOs must continue their vigilant engagement with the United Nations and the Royal Cambodian government to ensure that the ECCC remains judicially independent, corruption-free, and well-managed.

[FR Doc. 2012–20899 Filed 8–23–12; 8:45 am]

BILLING CODE 4710–30–P

DEPARTMENT OF STATE

[Public Notice 7993]

Culturally Significant Objects Imported for Exhibition Determinations: ''Extravagant Inventions: The Princely Furniture of the Roentgens,'' Formerly Titled ''Seductive Luxury and Innovation: The Furniture of Abraham and David Roentgen''

ACTION: Notice, correction.

SUMMARY: On August 29, 2011, notice was published on page 53705 of the **Federal Register** (volume 76, number 167) of determinations made by the Department of State pertaining to the exhibition ''Seductive Luxury and Innovation: The Furniture of Abraham and David Roentgen.'' The referenced notice is corrected here to change the exhibition name to ''Extravagant Inventions: The Princely Furniture of the Roentgens'' and to include additional objects as part of the exhibition. Notice is hereby given of the following determinations: Pursuant to the authority vested in me by the Act of October 19, 1965 (79 Stat. 985; 22 U.S.C. 2459), Executive Order 12047 of March 27, 1978, the Foreign Affairs Reform and Restructuring Act of 1998 (112 Stat. 2681, *et seq.;* 22 U.S.C. 6501 note, *et seq.*), Delegation of Authority No. 234 of October 1, 1999, Delegation of Authority No. 236–3 of August 28, 2000 (and, as appropriate, Delegation of Authority No. 257 of April 15, 2003), I hereby determine that the additional objects to be included in the exhibition ''Extravagant Inventions: The Princely Furniture of the Roentgens,'' imported from abroad for temporary exhibition within the United States, are of cultural significance. The additional objects are imported pursuant to loan agreements with the foreign owners or custodians. I also determine that the exhibition or display of the additional exhibit objects at The Metropolitan Museum of Art, New York, NY, from on or about October 29, 2012, until on or about January 27, 2013, and at possible additional exhibitions or venues yet to be determined, is in the national interest. At the conclusion of the exhibition at The Metropolitan Museum of Art, three of the works will continue to be displayed at The Metropolitan Museum of Art until on or about January 31, 2014. I have ordered that Public Notice of these Determinations be published in the **Federal Register**.

FOR FURTHER INFORMATION CONTACT: For further information, including a list of the additional exhibit objects, contact Julie Simpson, Attorney-Adviser, Office of the Legal Adviser, U.S. Department of State (telephone: 202–632–6467). The mailing address is U.S. Department of State, SA–5, L/PD, Fifth Floor (Suite 5H03), Washington, DC 20522–0505.

Dated: August 17, 2012.

J. Adam Ereli,

Principal Deputy Assistant Secretary, Bureau of Educational and Cultural Affairs, Department of State.

[FR Doc. 2012–20894 Filed 8–23–12; 8:45 am]

BILLING CODE 4710–05–P

DEPARTMENT OF STATE

[Public Notice 7992]

Notice of Request for Expressions of Interest by Environmental Experts in Assisting the CAFTA–DR Secretariat for Environmental Matters With the Preparation of Factual Records

AGENCY: Department of State.

ACTION: Request for environmental experts to assist the Dominican Republic-Central America-United States Free Trade Agreement (CAFTA–DR) Secretariat for Environmental Matters (Secretariat) with the preparation of factual records.

SUMMARY: The Department of State and the Office of the United States Trade Representative are compiling recommendations for candidates to be included on a roster of environmental experts from which the CAFTA–DR Secretariat can select individuals to assist in the preparation of factual records. The Department of State and the Office of the United States Trade Representative invite environmental experts, including representatives from non-governmental organizations, educational institutions, private sector enterprises, and other interested persons, to submit their expression of interest in being included on a roster of experts. We encourage submitters to review the following prior to offering a recommendation: (1) Chapter 17: Environment of the CAFTA–DR, in particular Articles 17.7 and 17.8; (2) paragraph 2(d) of the Understanding Regarding the Establishment of a Secretariat for Environmental Matters Under CAFTA–DR; (3) paragraphs 3 and 4 of Article 5 of the Agreement

Establishing a Secretariat for Environmental Matters Under CAFTA–DR; and (4) Decision No. 10 of the CAFTA–DR Environmental Affairs Council (Council). These documents are available at: *http://www.state.gov/e/oes/env/trade/caftadr/index.htm.*

DATES: To be assured of timely consideration, all written suggestions are requested no later than September 3, 2012.

ADDRESSES: Written suggestions should be emailed or faxed to Kelly Milton, Office of Environment and Natural Resources, Office of the United States Trade Representative (*KMilton@ustr.eop.gov*, Fax: 202–395–9517), and Abby Lindsay, Office of Environmental Policy, Bureau of Oceans and International Environmental and Scientific Affairs, U.S. Department of State (*LindsayA@state.gov*, Fax: 202–647–5947), with the subject line ''CAFTA–DR Roster of Environmental Experts to Assist in Development of Factual Records.'' If you have access to the Internet, you can view and comment on this notice by going to: *http://www.regulations.gov/#!home* and searching on docket number: DOS–2012–0047.

FOR FURTHER INFORMATION, CONTACT: Abby Lindsay, telephone (202) 647–8772 or Kelly Milton, telephone (202) 395–9590.

SUPPLEMENTARY INFORMATION: Pursuant to Article 17.7 and 17.8 of the Dominican Republic-Central America-United States Free Trade Agreement (CAFTA–DR), any person of a Party may file a submission with the CAFTA–DR Secretariat asserting that a Party is failing to effectively enforce its environmental laws. Where the Secretariat determines that a submission meets the criteria set out in paragraph 2 and 4 of Article 17.7, and where the Secretariat considers that the submission, in light of any response provided by the Party, warrants developing a factual record, the Secretariat shall so inform the Council and provide its reasons. The Secretariat shall prepare a factual record if the Council, by vote of any Party, instructs it to do so. For more information on factual records, see the Web site of the CAFTA–DR Secretariat, available at: *www.saa-sem.org.*

Pursuant to paragraph 2(d) of the Understanding Regarding the Establishment of a Secretariat for Environmental Matters Under CAFTA–DR (the Understanding), the Council shall establish a roster of environmental experts, comprising persons with a demonstrated record of good judgment, objectivity, and environmental expertise, including regional expertise, from which the Secretariat shall select, as appropriate, individuals to assist the Secretariat with the preparation of factual records pursuant to Article 17.8 of the CAFTA–DR.

Consistent with the obligation of paragraph 2(d) of the Understanding and paragraphs 3 and 4 of Article 5 of the Agreement Establishing a Secretariat for Environmental Matters Under CAFTA–DR, on July 3, 2012, the Council set forth procedures for the Secretariat to follow regarding the engagement of such experts. See Decision No. 10 ''Engagement of Environmental Experts to Assist the Secretariat for Environmental Matters with the Preparation of Factual Records.'' Pursuant to Decision 10, the General Coordinator of the Secretariat shall compile the recommendations received from the Parties and present the Council with the proposed roster of environmental experts. The Council shall decide, by consensus, to establish the roster as proposed.

According to Decision No. 10, individuals selected for inclusion on the roster shall:

- Have demonstrated a record of good judgment, objectivity and environmental expertise;
- Carry out all duties fairly, thoroughly and diligently;
- Demonstrate national or regional expertise where possible;
- Avoid impropriety or the appearance of impropriety and shall observe high standards of conduct so that the integrity or impartiality of any work performed by the expert at the request of the SEM shall not be called into question;
- Not seek or receive instructions from any government or any other authority external to the SEM or Council. Accordingly, experts shall not have *ex parte* contacts with any of the Parties without the prior explicit consent of the Secretariat or Council;
- Safeguard from public disclosure any information received in their capacity as an environmental expert, where the information is designated by its source as confidential or proprietary;
- Ensure that his or her work complies with all applicable laws and regulations; and
- Promptly disclose any interest, relationship or matter that is likely to affect the expert's independence or impartiality or that might reasonably create an appearance of impropriety or an apprehension of bias in his work.

The Department of State and the Office of the US Trade Representative are requesting expressions of interest in being included on the roster from environmental experts. To do so, please submit the following information:

1. Full Name.
2. Contact information (should include a business address, telephone number, and email address).
3. Citizenship(s).
4. A resume or curriculum vitae.
5. A letter of reference.
6. Three individuals, in addition to the author of the letter of reference, who are willing to serve as a reference and provide information regarding the expert's professional experience (should include the names, contact information, and relationship to expert).
7. A summary of any current and past employment by, consulting experience, or other work for any of the Governments that are a Party to the CAFTA–DR.
8. Proof of Spanish and English language proficiency, written and spoken.

For additional information, please visit: *http://www.state.gov/e/oes/env/trade/caftadr/index.htm.*

Disclaimer: This Public Notice is a request for expressions of interest, and is not a request for applications. No granting of money is directly associated with this request for environmental experts. The Department of State and the Office of the United States Trade Representative will select which environmental experts are included on the U.S. recommendation of candidates.

Dated: August 20, 2012.

John Thompson,

Acting Director, Office of Environmental Policy, Department of State.

[FR Doc. 2012–20896 Filed 8–23–12; 8:45 am]

BILLING CODE 4710–09–P

STATE JUSTICE INSTITUTE

SJI Board of Directors Meeting

AGENCY: State Justice Institute.

ACTION: Notice of Meeting.

SUMMARY: The SJI Board of Directors will be meeting on Monday, September 17, 2012 at 1 p.m. The meeting will be held at the National Judicial College, in Reno, Nevada. The purpose of this meeting is to consider grant applications for the 4th quarter of FY 2012, and other business. All portions of this meeting are open to the public.

ADDRESSES: National Judicial College, Judicial College Building, M/S 358, Reno, NV 89557, 1–800–25–JUDGE.

FOR FURTHER INFORMATION CONTACT: Jonathan Mattiello, Executive Director, State Justice Institute, 11951 Freedom

Drive, Suite 1020, Reston, VA 20190, 571–313–8843, *contact@sji.gov.*

Jonathan D. Mattiello,

Executive Director.

[FR Doc. 2012–20865 Filed 8–23–12; 8:45 am]

BILLING CODE P

DEPARTMENT OF TRANSPORTATION

Office of the Secretary

Notice of Funding Availability for the Small Business Transportation Resource Center Program

AGENCY: Department of Transportation (DOT), Office of the Secretary of Transportation (OST), Office of Small and Disadvantaged Business Utilization (OSDBU).

ACTION: Notice of Funding Availability; Extension of closing and award dates.

SUMMARY: This action extends the closing and award dates for a Notice of Funding Availability for the Small Business Transportation Resource Center in the Mid-Atlantic Region that was published on July 20, 2012, 77 FR 42790. USDOT OSDBU is extending the closing date to allow eligible entities time to adequately submit a proposal.

DATES: The submission period for the Notice of Funding Availability published on July 20, 2012 closing on September 3, 2012 is extended until September 17, 2012, 5 p.m. Eastern Standard Time. Also, the notice of award for the competed region on or before August 17, 2012 is extended until October 1, 2012.

ADDRESSES: Proposals must be electronically submitted to OSDBU via email at *SBTRC@dot.gov.*

FOR FURTHER INFORMATION CONTACT: For further information concerning this notice, contact Ms. Patricia Martin, U.S. Department of Transportation, Office of Small and Disadvantaged Business Utilization, 1200 New Jersey Avenue SE., W56–462, Washington, DC 20590. Telephone: 1–800 532 1169. Email: *patricia.martin@dot.gov.*

SUPPLEMENTARY INFORMATION: In the July 20, 2012 document (Notice No. USDOT–OST–OSDBU–SBTRC2012–11; Docket Number: DOT–OST–2009–0092), the Department of Transportation (DOT), Office of the Secretary (OST), Office of Small and Disadvantaged Business Utilization (OSDBU) announces the opportunity for; (1) business centered community-based organizations; (2) transportation-related trade associations; (3) colleges and universities; (4) community colleges or; (5) chambers of commerce, registered with the Internal Revenue Service as 501 C(6) or 501 C(3) tax-exempt organizations, to compete for participation in OSDBU's Small Business Transportation Resource Center (SBTRC) program in the Mid-Atlantic Region.

Issued in Washington, DC, on August 15, 2012.

Brandon Neal,

Director, Office of Small and Disadvantaged Business Utilization,Office of the Secretary, U.S. Department of Transportation.

[FR Doc. 2012–20846 Filed 8–23–12; 8:45 am]

BILLING CODE 4910–9X–P

DEPARTMENT OF TRANSPORTATION

Federal Aviation Administration

Agency Information Collection Activities: Requests for Comments; Clearance of Renewed Approval of Information Collection: Commercial Space Transportation Licensing Regulations

AGENCY: Federal Aviation Administration (FAA), DOT.

ACTION: Notice and request for comments.

SUMMARY: In accordance with the Paperwork Reduction Act of 1995, FAA invites public comments about our intention to request the Office of Management and Budget (OMB) approval to renew an information collection. The **Federal Register** Notice with a 60-day comment period soliciting comments on the following collection of information was published on May 18, 2012, vol. 77, no. 97, page 29748–29749. The information will determine if applicant proposals for conducting commercial space launches can be accomplished according to regulations issued by the Office of the Associate Administrator for Commercial Space Transportation.

DATES: Written comments should be submitted by September 24, 2012.

ADDRESSES: Interested persons are invited to submit written comments on the proposed information collection to the Office of Information and Regulatory Affairs, Office of Management and Budget. Comments should be addressed to the attention of the Desk Officer, Department of Transportation/FAA, and sent via electronic mail to *oira_submission@omb.eop.gov*, or faxed to (202) 395–6974, or mailed to the Office of Information and Regulatory Affairs, Office of Management and Budget, Docket Library, Room 10102, 725 17th Street NW., Washington, DC 20503.

FOR FURTHER INFORMATION CONTACT: Kathy DePaepe at (405) 954–9362, or by email at: *Kathy.A.DePaepe@faa.gov.*

SUPPLEMENTARY INFORMATION:

OMB Control Number: 2120–0608.

Title: Commercial Space Transportation Licensing Regulations.

Form Numbers: FAA Form 8800–1.

Type of Review: Renewal of an information collection.

Background: The Commercial Space Launch Act of 1984, 49 U.S.C. App. §§ 2601–2623, as recodified at 49 U.S.C. Subtitle IX, Ch. 701—Commercial Space Launch Activities, 49 U.S.C. 70101–70119 (1994), requires certain data be provided in applying for a license to conduct commercial space launch activities. These data are required to demonstrate to the Federal Aviation Administration (FAA), Associate Administrator for Commercial Space Transportation (AST), that a license applicant's proposed activities meet applicable public safety, national security, and foreign policy interests of the United States.

Respondents: Approximately 4 space launch applicants.

Frequency: Information is collected on occasion.

Estimated Average Burden per Response: 1544.5 hours.

Estimated Total Annual Burden: 6,178 hours.

Public Comments Invited: You are asked to comment on any aspect of this information collection, including (a) Whether the proposed collection of information is necessary for FAA's performance; (b) the accuracy of the estimated burden; (c) ways for FAA to enhance the quality, utility and clarity of the information collection; and (d) ways that the burden could be minimized without reducing the quality of the collected information. The agency will summarize and/or include your comments in the request for OMB's clearance of this information collection.

Issued in Washington, DC, on August 20, 2012.

Albert R. Spence,

FAA Assistant Information Collection Clearance Officer, IT Enterprises Business Services Division, AES–200.

[FR Doc. 2012–20811 Filed 8–23–12; 8:45 am]

BILLING CODE 4910–13–P

DEPARTMENT OF TRANSPORTATION

National Highway Traffic Safety Administration

[U.S. DOT Docket No. NHTSA–2012–0121]

Reports, Forms, and Recordkeeping Requirements

AGENCY: National Highway Traffic Safety Administration (NHTSA), DOT.

ACTION: Notice of request for public comment on proposed collection of information.

SUMMARY: Before a Federal agency can collect certain information from the public, it must receive approval from the Office of Management and Budget (OMB). Under procedures established by the Paperwork Reduction Act of 1995 (44 U.S.C. 3501 *et seq.*), before seeking OMB approval, Federal agencies must solicit public comment on proposed collections of information, including extensions and reinstatements of previously approved collections. This document describes one collection of information for which NHTSA intends to seek OMB approval.

DATES: Comments must be received on or before October 23, 2012.

ADDRESSES: Comments should refer to the docket number and be submitted to: U.S. Department of Transportation, Docket Management Facility, West Building, 1200 New Jersey Avenue SE., Room W12–140, Washington, DC 20590. Docket hours are 9 a.m. to 5 p.m., Monday through Friday, except Federal holidays. You may call the docket at 202–647–5527. You may also submit comments electronically at *www.regulations.gov*.

FOR FURTHER INFORMATION CONTACT: Ms. Amy Berning, Contracting Officer's Technical Representative, Office of Behavioral Safety Research (NTI–131), National Highway Traffic Safety Administration, 1200 New Jersey Avenue SE., Washington, DC 20590.

Ms. Berning's phone number is 202–366–5587 and the email address is *amy.berning@dot.gov*.

SUPPLEMENTARY INFORMATION: Under the Paperwork Reduction Act of 1995, before an agency submits a proposed collection of information to OMB for approval, it must publish a document in the **Federal Register** providing a 60-day comment period and otherwise consult with members of the public and affected agencies concerning each proposed collection of information. The OMB has promulgated regulations describing what must be included in such a document. Under OMB's regulations (at 5 CFR 1320.8(d)), an agency must ask for public comment on the following:

(i) Whether the proposed collection of information is necessary for the proper performance of the functions of the agency, including whether the information will have practical utility;

(ii) The accuracy of the agency's estimate of the burden of the proposed collection of information, including the validity of the methodology and assumptions used;

(iii) How to enhance the quality, utility, and clarity of the information to be collected; and

(iv) How to minimize the burden of the collection of information on those who are to respond, including the use of appropriate automated, electronic, mechanical, or other technological collection techniques or other forms of information technology, e.g., permitting electronic submission of responses.

In compliance with these requirements, NHTSA asks public comment on the following proposed collection of information:

National Roadside Survey of Alcohol and Drugged Driving 2013

Type of Request—New information collection requirement.

OMB Clearance Number—None.

Form Number—This collection of information uses no standard forms.

Requested Expiration Date of Approval—3 years from date of approval.

Summary of the Collection of Information—NHTSA proposes to conduct a study to estimate the prevalence of alcohol-, drug-, and alcohol-and-drug-involved driving, primarily among nighttime weekend drivers, but also daytime Friday drivers, on our Nation's roadways. A minimum of 7,500 drivers at various locations across the country will be interviewed anonymously at the roadside to: (1) Determine the prevalence of drivers at various BACs, and (2) determine the prevalence of drivers with the presence of various (over-the-counter, prescription, and illegal) drugs in their system. Trained survey teams will obtain data on alcohol and drug use of drivers through passive alcohol sensors (PASs), preliminary breath-test samples, oral fluid samples, and, for a subset of the drivers, blood samples. Each driver will be asked several questions regarding their general driving behavior, alcohol use, drinking-and-driving behavior, drug use, and drugged-driving behavior. Some demographic data will be recorded as well.

Data collection would take place over a six month period at 60 different locations across the United States, with five data collection sites within each location for a total of 300 data collection sites. Researchers would conduct surveys with at least 7,500 drivers. The research team will consist of a survey manager, a licensed phlebotomist, data collectors, and two off-duty law enforcement officers. Law enforcement officers will wave vehicles into the survey site, and then a data collector will ask the driver to participate in a voluntary, anonymous, research survey.

The survey includes questions about alcohol and drug use and impaired driving, a Blood Alcohol Concentration (BAC) breath test, collection of an oral fluid specimen, and collection of a blood sample. The results of the breath and biological samples will not be known to the researchers on site. Breath alcohol test results will be downloaded and analyzed later. Biological samples will be analyzed later at a central laboratory by a trained toxicologist.

Drivers must be at least age 16 to participate (18 years to provide a blood sample), speak English or Spanish, not be in emotional or physical distress, not be driving a commercial vehicle, and be able to understand that they are being asked to voluntarily participate in a confidential research study.

A road sign will indicate ''Voluntary Survey Ahead.'' The team's police officer will flag down the first available vehicle after the data collector indicates that he/she is ready to commence data collection. The data collector will invite the driver to participate in a voluntary anonymous research survey and explain the details of the data collection. The same survey questions as noted above will be used. There will be a total of at least 7,500 subjects.

Description of the Need for the Information and Proposed Use of the Information—The National Highway Traffic Safety Administration's (NHTSA) mission is to save lives, prevent injuries, and reduce healthcare and other economic costs associated with motor vehicle crashes. The agency's goal is to reduce the rate of fatalities in alcohol-related (.08+ BAC) crashes per 100 million vehicle miles traveled, 0.45 in 2011 (the rate in 2006 was .50). NHTSA also has the responsibility to reduce drug-involved driving. While much is known about alcohol-involved driving, relatively little is known about drug-involved driving associated with drivers having consumed psychoactive drugs other than alcohol, alone and in combination with alcohol. This study would significantly add to the body of knowledge about that important issue, providing critical data on alcohol-, drug-, and alcohol-and-drug-involved

drivers on the road. The alcohol use prevalence estimates among drivers will be compared with previous National Roadside Surveys conducted in 1973, 1986, 1996, and 2007. The drug use prevalence estimates will be compared with the results of the 2007 National Roadside Survey, the first time these data were collected. The results of the study will be used by NHTSA to help guide policy development and countermeasure programs intended to reduce the risk on our highways presented by impaired drivers.

Description of the Likely Respondents (Including Estimated Number, and Proposed Frequency of Response to the Collection of Information)—Under this proposed effort, the Contractor would collect data from approximately 7,500 subjects. Data collection would take place over a six month period at 60 different sites across the United States, with five data collection sites within each location for a total of 300 data collection locations.

Estimate of the Total Annual Reporting and Record Keeping Burden Resulting from the Collection of Information—NHTSA estimates that participants will spend an average of 20 minutes each to complete the survey, for a total of approximately 2,500 hours for the study respondents. The respondents would not incur any reporting cost or record keeping burden from the data collection.

Authority: 44 U.S.C. Section 3506(c)(2)(A).

Issued on: August 21, 2012.

Jeffrey P. Michael,

Associate Administrator for Research and Program Development.

[FR Doc. 2012–20940 Filed 8–23–12; 8:45 am]

BILLING CODE 4910–59–P

DEPARTMENT OF TRANSPORTATION

National Highway Traffic Safety Administration

Distracted Driving Grant Program

AGENCY: Department of Transportation (DOT), National Highway Traffic Safety Administration (NHTSA).

ACTION: Notice of funding availability.

SUMMARY: Pursuant to the recently enacted Moving Ahead for Progress in the 21st Century Act (MAP–21), the Department of Transportation (DOT) announces the availability of funding authorized in the amount of $17.525 million in Federal fiscal year (FY) 2013 funds to provide grants to States for enacting and enforcing distracted driving laws. The FY 2013 funds are subject to an annual obligation limitation that may be established in appropriations law. Therefore, the amount available for the grants in FY 2013 may be less than the amount identified above.

A State's distracted driving law must meet statutorily-specified criteria in order for the State to receive a grant. States that are awarded grants also must follow post-award grant requirements. This notice describes the statutorily-specified criteria, the application requirements and the administrative requirements for the Distracted Driving Grant Program.

The Department is publishing this notice to give States an opportunity to submit applications for the newly authorized distracted driving grants as soon as possible in FY 2013. Funds for this grant program are authorized beginning on October 1, 2012.

DATES: To receive a grant under the Distracted Driving Grant Program, a State must submit an application by the deadline established by the Secretary. Applications for FY 2013 distracted driving grants must be received by 11:59 p.m. Eastern Time on October 9, 2012. Applications received after that date will not be considered. Applications will not be accepted on a rolling basis after the deadline.

ADDRESSES: Applications must be submitted electronically to the following email address: *DOT-DDGrants@dot.gov.* Only applications submitted to that email address will be deemed properly filed. Instructions for submitting applications are included in Section IV (Application Process).

FOR FURTHER INFORMATION CONTACT: For legal issues: Ms. Jin Kim, Attorney-Advisor, Office of the Chief Counsel, National Highway Traffic Safety Administration, Telephone number: 202–366–1834; email: *Jin.Kim@dot.gov.* For program issues: Dr. Maggi Gunnels, Associate Administrator, Regional Operations and Program Delivery, National Highway Traffic Safety Administration, Telephone number: 202–366–2121; email: *Maggi.Gunnels@dot.gov.*

SUPPLEMENTARY INFORMATION:

Table of Contents

I. Background
II. Eligibility
III. Qualification Requirements
IV. Application Process
V. Program Funding and Award
VI. Use of Grant Funds
VII. Administration
VIII. Additional Information

I. Background

In 2010, there were nearly 33,000 motor-vehicle related deaths on our Nation's highways. Driving while distracted is a deadly habit that contributes to a significant portion of that total, with 3,000 lives lost in crashes where distraction was a factor. The epidemic of distracted driving is one of our greatest highway safety challenges.

On July 6, 2012, the President signed into law the ''Moving Ahead for Progress in the 21st Century Act'' (MAP–21), Public Law 112–141, which created a new distracted driving grant program. MAP–21 authorizes the Secretary of Transportation to provide incentive grants to States that enact and enforce laws prohibiting distracted driving. MAP–21 authorizes funding beginning in fiscal year (FY) 2013. The Administrator of the National Highway Traffic Safety Administration (NHTSA) oversees State highway safety programs on behalf of the Secretary, including application, review, award and administration of grants.

MAP–21 authorizes $22.525 million in FY 2013 for the Distracted Driving Grant Program from the Highway Trust Fund. See 23 U.S.C. 405(a)(1)(D). Of this amount, up to $5 million may be expended for the development and placement of broadcast media to support the enforcement of State distracted driving laws. After reserving $5 million for broadcast media support, $17.525 million is authorized in FY 2013 to provide grants under 23 U.S.C. 405(e) (hereinafter ''Section 405(e)''). However, since these FY 2013 grant funds are subject to an annual obligation limitation, the amount of available funds for the FY 2013 grants may be less.

II. Eligibility

The Distracted Driving Grant Program, as enacted by MAP–21, derives its definition of ''State'' from 23 U.S.C. 401. In accordance with 23 U.S.C. 401, the 50 States, the District of Columbia, Puerto Rico, American Samoa, the Commonwealth of the Northern Mariana Islands, Guam and the Virgin Islands (''the States'') are eligible to apply for distracted driving grants.

III. Qualification Requirements

A. *General.* In FY 2013, a State may qualify for a grant under Section 405(e) in one of two ways. A State may qualify by having a comprehensive primary enforcement distracted driving law (hereinafter ''Distracted Driving Grant''). See Section III.B. Alternatively, in the first year only, a State may qualify by having a primary enforcement texting law if the State is ineligible for a Distracted Driving Grant (hereinafter ''First-Year Texting-Ban Grant''). See

Section III.C. The basis for an award under this grant program is a State statute that complies with the criteria set out in Section 405(e). (See Sections B and C and the permitted exceptions and definitions below for an outline of the provisions.)

Permitted exceptions. In accordance with MAP–21, a State statute may provide for the following exceptions and still meet the qualification requirements for a grant (either as a Distracted Driving Grant or a First-Year Texting-Ban Grant)—

- A driver who uses a personal wireless communications device to contact emergency services;
- Emergency services personnel who use a personal wireless communications device while operating an emergency services vehicle and engaged in the performance of their duties as emergency services personnel; and
- An individual employed as a commercial motor vehicle driver or a school bus driver who uses a personal wireless communications device within the scope of such individual's employment if such use is permitted under the regulations promulgated pursuant to section 31152 of title 49.

No other exceptions are permitted under MAP–21.

Definitions. Section 405(e) defines certain terms. The operation of the State statute must be consistent with the following definitions:

- ''*Driving*'' means operating a motor vehicle on a public road, including operation while temporarily stationary because of traffic, a traffic light or stop sign, or otherwise; and does not include operating a motor vehicle when the vehicle has pulled over to the side of, or off, an active roadway and has stopped in a location where it can safely remain stationary.
- ''*Personal wireless communications device*'' means a device through which personal wireless services (as defined in section 332(c)(7)(C)(i) of the Communications Act of 1934 (47 U.S.C. 332(c)(7)(C)(i))) are transmitted, but does not include a global navigation satellite system receiver used for positioning, emergency notification, or navigation purposes.
- ''*Primary offense*'' means an offense for which a law enforcement officer may stop a vehicle solely for the purpose of issuing a citation in the absence of evidence of another offense.
- ''*Public road*'' has the meaning given such term in 23 U.S.C. 402(c).
- ''*Texting*'' means reading from or manually entering data into a personal wireless communications device, including doing so for the purpose of SMS texting, emailing, instant messaging, or engaging in any other form of electronic data retrieval or electronic data communication.

In addition, Section 405(e) requires States to enforce the law in order to qualify for a grant. While Section 405(e) does not define the term ''enforce,'' we will use the definition that DOT has historically used in similar programs (e.g., Public Law 109–59, Section 2005). In order to meet the requirement that the State enforce a statute, the law must not only be enacted but be in operation, allowing citations to be issued. Therefore, a law that has a future effective date or that includes a provision limiting enforcement (e.g., by imposing written warnings) during a ''grace period'' after the law goes into effect would not be deemed in effect or being enforced until the effective date is reached or the grace period ends. A State whose law is either not in effect or contains a ''grace period'' or ''warning period'' on the due date for grant applications (see ''Dates'' section above) will not qualify for a FY 2013 grant under this program.

B. *Distracted Driving Grant.* In order to qualify for a Distracted Driving Grant, a State must have enacted and be enforcing a statute that meets all the requirements set out in Section 405(e), as outlined below:

(1) *Prohibition on texting while driving.* The State statute must—

(a) Prohibit drivers from texting through a personal wireless communications device while driving;

(b) Make violation of the statute a primary offense; and

(c) Establish—

(i) a minimum fine for a first violation of the statute; and

(ii) increased fines for repeat violations.

(2) *Prohibition on youth cell phone use while driving.* The State statute must—

(a) Prohibit a driver who is younger than 18 years of age from using a personal wireless communications device while driving;

(b) Make violation of the statute a primary offense;

(c) Require distracted driving issues to be tested as part of the State's driver's license examination; and

(d) Establish—

(i) a minimum fine for a first violation of the statute; and

(ii) increased fines for repeat violations.

C. *First-Year Texting-Ban Grant.* In the first year only of this grant program, a State that is ineligible for a Distracted Driving Grant (Section III.B) may qualify for a First-Year Texting-Ban Grant if the State has enacted a primary enforcement texting law before July 6, 2012. Specifically, the State statute must—

(1) Prohibit drivers from texting through a personal wireless communications device while driving; and

(2) Make a violation of the statute a primary offense.

IV. Application Process

A. *Application Contents.* The DOT Uniform Administrative Requirements for Grants and Cooperative Agreements to State and Local Governments, found at 49 CFR part 18, directs applicants to use standard application forms or those prescribed by the granting agency with the approval of the Office of Management and Budget under the Paperwork Reduction Act of 1980. Accordingly, States interested in applying for Section 405(e) grant funds in FY 2013 must submit Standard Form (SF) 424, Application for Federal Assistance, signed by the Governor's Representative for Highway Safety. Please see *www07.grants.gov/assets/SF424Instructions.pdf* for instructions on how to complete the SF 424.

As a part of an attachment to SF 424, applicants must specify the grant for which the applicant is applying (Distracted Driving Grant *or* First-Year Texting-Ban Grant), and identify the State statute (by citation), including each provision of the State statute that meets each of the qualification requirements for a Section 405(e) grant.

Applications must be submitted electronically to the following Email address: *DOT-DDGrants@dot.gov.* Only applications submitted to that Email address will be deemed properly filed.

B. *Application Deadline.* For FY 2013 Distracted Driving Grants or First-Year Texting-Ban Grants, grant applications must be received by 11:59 p.m. Eastern Time on October 9, 2012. Late applications will not be considered.

C. *Application Review.* DOT will review each application and State statute to verify compliance with all of the provisions of Section 405(e). DOT reserves the right to seek clarification from any applicant about the information in its application, but expects applications to be complete upon submission. Applicants will be notified of award by letter to the Governor.

V. Program Funding and Award

As noted above, MAP–21 authorizes $22.525 million in FY 2013 for the Distracted Driving Grant Program. See 23 U.S.C. 405(a)(1)(D). In the first fiscal year of this program, MAP–21 provides that DOT may award up to 25 percent of the amount available for Section

405(e) grants to those States that have enacted a primary enforcement texting-ban law before July 6, 2012, and are otherwise ineligible for a grant under this program (i.e., First-Year Texting-Ban Grant). See 23 U.S.C. 405(e)(6). Therefore, subject to the availability of funds, DOT intends to make available approximately $5.6 million for First-Year Texting-Ban Grants in FY 2013 (Section III.C). In FY 2013, DOT further intends to reserve $5 million of the amount available for Section 405(e) grants for broadcast media support, as is authorized in MAP–21. See 23 U.S.C. 405(e)(7). Accordingly, subject to the availability of funds, of the $17.525 million reserved in FY 2013 to provide grants under Section 405(e), DOT intends to make available approximately $11.9 million for Distracted Driving Grants (Section III.B) and approximately $5.6 million for First-Year Texting-Ban Grants (Section III.C).

Section 405(e) does not specify how distracted driving grants are to be allocated among the qualifying States. Four of the six grant programs authorized in MAP–21 Section 31105 (Occupant Protection, State Traffic Safety Information System, Impaired Driving Countermeasures and Graduated Driver Licensing Laws) allocate grant funds in proportion to the State's apportionment under 23 U.S.C. 402 for FY 2009. DOT will use this process to allocate grant funds to States under both parts of this grant program (Distracted Driving Grants and First-Year Texting-Ban Grants), consistent with past practice in a number of highway safety grant programs. In addition, consistent with limitations in some other highway safety programs, a cap of 10 percent of the total amount authorized for FY 2013 Section 405(e) will apply to each grant award. The amount of funds awarded to a State under this program will depend on the grant for which a State is applying and the total number of States qualifying for each type of grant under the program.

VI. Use of Grant Funds

A. *Eligible uses of grant funds.* MAP–21 stipulates that each State that receives a Section 405(e) grant must use at least 50 percent of the grant funds (1) to educate the public through advertising containing information about the dangers of texting or using a cell phone while driving; (2) for traffic signs that notify drivers about the distracted driving law of the State; or (3) for law enforcement costs related to the enforcement of the distracted driving law. See 23 U.S.C. 405(e)(5)(A). The remaining grant funds, but no more than 50 percent, may be used for any eligible project or activity under 23 U.S.C. 402. See 23 U.S.C. 405(e)(5)(B).

B. *Matching requirement.* MAP–21 Section 31105 does not specify a Federal share for the activities funded by the Distracted Driving Grant Program. However, 23 U.S.C. 120 specifies a Federal share of 80 percent for any project or activity carried out under Title 23. Because the Distracted Driving Grant Program is a program under Title 23, the Federal share is 80 percent.

VII. Administration

The requirements of 49 CFR part 18, the Uniform Administrative Requirements for Grants and Cooperative Agreements to State and Local Governments, govern the implementation and management of grants awarded under the Distracted Driving Grant Program. For ease of administration, States may fulfill financial and reporting requirements through the processes (e.g., vouchering, reporting) applied to the other highway safety grants in Title 23, Chapter 4. This includes the requirement that qualifying States submit a plan explaining, by countermeasure area, how awarded grant funds will be used, including those that will be used to address distracted driving and those that will be used for eligible projects under 23 U.S.C. 402.

VIII. Additional Information

Beginning with FY 2014 grants, July 1 of the prior year is the single application deadline for highway safety program grants and national priority program grants. See MAP–21 Sections 31101 and 31102. While DOT is publishing this notice to give States an opportunity to submit applications for these newly authorized grants in FY 2013, in the near future, DOT intends to issue regulations implementing highway safety program grants and national priority safety program grants under Sections 402 and 405 for FY 2013 and 2014, as applicable. DOT intends to award Distracted Driving Grants under Section 405(e) for FY 2014 and future years pursuant to the single application process to be set forth in those upcoming regulations.

Authority: Public Law 112–141, Section 31105(e); 23 U.S.C. 405(e) (as set forth in MAP–21); delegation of authority at 49 CFR §§ 1.94 and 1.95.

Issued on: August 17, 2012.

Ray LaHood,

Secretary.

[FR Doc. 2012–20926 Filed 8–23–12; 8:45 am]

BILLING CODE 4910–59–P

DEPARTMENT OF TRANSPORTATION

National Highway Traffic Safety Administration

Petition for Exemption From the Vehicle Theft Prevention Standard; Mitsubishi Motors R&D of America, Inc.

AGENCY: National Highway Traffic Safety Administration (NHTSA), Department of Transportation (DOT).

ACTION: Grant of petition for exemption.

SUMMARY: This document grants in full the Mitsubishi Motors R&D of America, Inc.'s (Mitsubishi) petition for exemption of the Mitsubishi [confidential] vehicle line in accordance with 49 CFR part 543, *Exemption from the Theft Prevention Standard.* This petition is granted because the agency has determined that the antitheft device to be placed on the line as standard equipment is likely to be as effective in reducing and deterring motor vehicle theft as compliance with the parts-marking requirements of the Theft Prevention Standard 49 CFR part 541, *Federal Motor Vehicle Theft Prevention Standard.* Mitsubishi requested [confidential] treatment for specific information in its petition. The agency will address Mitsubishi's request for [confidential] treatment by separate letter.

DATES: The exemption granted by this notice is effective beginning with the 2014 model year.

FOR FURTHER INFORMATION CONTACT: Ms. Deborah Mazyck, Office of International Policy, Fuel Economy and Consumer Programs, NHTSA, West Building, W43–443, 1200 New Jersey Avenue SE., Washington, DC 20590. Ms. Mazyck's phone number is (202) 366–0846. Her fax number is (202) 493–2990.

SUPPLEMENTARY INFORMATION: In a petition dated June 29, 2012, Mitsubishi requested exemption from the parts-marking requirements of the Theft Prevention Standard (49 CFR part 541) for the Mitsubishi [confidential] vehicle line, beginning with MY 2014. The petition requested an exemption from parts-marking pursuant to 49 CFR part 543, *Exemption from Vehicle Theft Prevention Standard,* based on the installation of an antitheft device as standard equipment for the entire vehicle line.

Under § 543.5(a), a manufacturer may petition NHTSA to grant an exemption for one vehicle line per model year. In its petition, Mitsubishi provided a detailed description and diagram of the identity, design, and location of the components of the antitheft device for

the [confidential] vehicle line. Mitsubishi will install a passive, transponder-based, electronic engine immobilizer device as standard equipment on its [confidential] vehicle line beginning with MY 2014. Mitsubishi stated that its entry models will be equipped with a Wireless Control Module (WCM) immobilizer. Components of the WCM will include a transponder key, key ring antenna and an electronic time and alarm control system (ETACS). All other models will be equipped with a One-touch Starting System (OSS) immobilizer. Components of the OSS include the engine switch, keyless operation electronic control unit (KOS ECU), OSS ECU and KOS key. Mitsubishi will not incorporate an audible and visual alarm system on its vehicles. Mitsubishi's submission is considered a complete petition as required by 49 CFR 543.7, in that it meets the general requirements contained in 543.5 and the specific content requirements of 543.6.

Mitsubishi stated that the WCM is a keyless entry system in which the transponder is embedded in a traditional key and inserted into the key cylinder to activate the ignition and start the engine. All other models of the [confidential] vehicle line are equipped with a OSS system, which utilizes a keyless system that allows the driver to press a button on the instrument panel to activate and deactivate the ignition as long as the transponder is located in close proximity to the driver. Mitsubishi also stated that the performance of the immobilizer will be the same in all models whether the vehicle has a WCM or OSS entry system. Mitsubishi further stated that the only difference between the two devices will be the ''key'' (i.e., transponder key or keyless operation key) and the method used to transmit the information to the immobilizer.

Mitsubishi stated that once the ignition switch is turned or pushed to the ''ignition-on'' position, the transceiver module reads the specific ignition key code for the vehicle and transmits an encrypted message containing the key code to the electronic control unit (ECU). The immobilizer receives the key code signal transmitted from either type of key (WCM or OSS) and verifies that the key code signal is correct. The immobilizer then sends a separate encrypted start-code signal to the engine ECU to allow the driver to start the vehicle. The engine only will function if the key code matches the unique identification key code previously programmed into the ECU. If the codes do not match, the engine and fuel systems will be disabled.

In addressing the specific content requirements of 543.6, Mitsubishi provided information on the reliability and durability of its proposed device. To ensure reliability and durability of the device, Mitsubishi conducted tests based on its own specified standards. Mitsubishi provided a detailed list of the tests conducted and believes that the device is reliable and durable since the device complied with its specific requirements for each test. Mitsubishi additionally stated that its immobilizer device is further enhanced by several factors making it very difficult to defeat. Specifically, Mitsubishi stated that communication between the transponder and the ECU are encrypted. The WCM has over 4.3 billion and the OSS has over 250 million different possible key codes that make successful key code duplication virtually impossible. Mitsubishi also stated that its immobilizer system and the ECU share security data during vehicle assembly that make them a matched set. These matched modules will not function if taken out and reinstalled separately on other vehicles. Mitsubishi also stated that it is impossible to mechanically override the system and start the vehicle because the vehicle will not be able to start without the transmission of the specific code to the electronic control module. Lastly, Mitsubishi stated that the antitheft device is extremely reliable and durable because there are no moving parts, nor does the key require a separate battery.

Mitsubishi informed the agency that its Eclipse vehicle line has been equipped with the device since introduction of its MY 2000 vehicles. Mitsubishi stated that the theft rate for the MY 2000 Eclipse decreased by almost 42% when compared with that of its MY 1999 Mitsubishi Eclipse (unequipped with an immobilizer device). Mitsubishi also revealed that the Eclipse, Galant, Endeavor, Outlander, Lancer, Outlander Sport and i-MiEV vehicle lines have been equipped with a similar type of immobilizer device since January 2000, January 2004, April 2004, September 2006, March 2007, September 2010 and October 2011 respectively. The Mitsubishi Eclipse, Galant, Endeavor, Outlander and Lancer vehicle lines have all been granted parts-marking exemptions by the agency and the average theft rates using 3 MY's data are 1.7356, 4.8973, 1.1619, 0.3341 and 1.0871 respectively. Theft rate data for the Outlander Sport and i-MiEV are not available. Therefore, Mitsubishi has concluded that the antitheft device proposed for its vehicle line is no less effective than those devices in the lines for which NHTSA has already granted full exemption from the parts-marking requirements.

Based on the supporting evidence submitted by Mitsubishi on the device, the agency believes that the antitheft device for the [confidential] vehicle line is likely to be as effective in reducing and deterring motor vehicle theft as compliance with the parts-marking requirements of the Theft Prevention Standard (49 CFR part 541). The agency concludes that the device will provide four of the five types of performance listed in § 543.6(a)(3): promoting activation; preventing defeat or circumvention of the device by unauthorized persons; preventing operation of the vehicle by unauthorized entrants; and ensuring the reliability and durability of the device.

Pursuant to 49 U.S.C. 33106 and 49 CFR 543.7(b), the agency grants a petition for an exemption from the parts-marking requirements of Part 541 either in whole or in part, if it determines that, based upon substantial evidence, the standard equipment antitheft device is likely to be as effective in reducing and deterring motor vehicle theft as compliance with the parts-marking requirements of Part 541. The agency finds that Mitsubishi has provided adequate reasons for its belief that the antitheft device for the Mitsubishi [confidential] vehicle line is likely to be as effective in reducing and deterring motor vehicle theft as compliance with the parts-marking requirements of the Theft Prevention Standard (49 CFR part 541). This conclusion is based on the information Mitsubishi provided about its device.

For the foregoing reasons, the agency hereby grants in full Mitsubishi's petition for exemption for the [confidential] vehicle line from the parts-marking requirements of 49 CFR part 541, beginning with the 2014 model year vehicles. The agency notes that 49 CFR part 541, Appendix A–1, identifies those lines that are exempted from the Theft Prevention Standard for a given model year. 49 CFR 543.7(f) contains publication requirements incident to the disposition of all Part 543 petitions. Advanced listing, including the release of future product nameplates, the beginning model year for which the petition is granted and a general description of the antitheft device is necessary in order to notify law enforcement agencies of new vehicle lines exempted from the parts-marking requirements of the Theft Prevention Standard. Mitsubishi will provide the agency with notification of the nameplate and model year of the vehicle

line for which [confidential] treatment has been requested prior to introduction of the vehicle line.

If Mitsubishi decides not to use the exemption for this line, it must formally notify the agency. If such a decision is made, the line must be fully marked as required by 49 CFR 541.5 and 541.6 (marking of major component parts and replacement parts).

NHTSA notes that if Mitsubishi wishes in the future to modify the device on which this exemption is based, the company may have to submit a petition to modify the exemption. Part 543.7(d) states that a Part 543 exemption applies only to vehicles that belong to a line exempted under this part and equipped with the antitheft device on which the line's exemption is based. Further, § 543.9(c)(2) provides for the submission of petitions ''to modify an exemption to permit the use of an antitheft device similar to but differing from the one specified in that exemption.''

The agency wishes to minimize the administrative burden that Part 543.9(c)(2) could place on exempted vehicle manufacturers and itself. The agency did not intend Part 543 to require the submission of a modification petition for every change to the components or design of an antitheft device. The significance of many such changes could be *de minimis.* Therefore, NHTSA suggests that if the manufacturer contemplates making any changes, the effects of which might be characterized as *de minimis,* it should consult the agency before preparing and submitting a petition to modify.

Authority: 49 U.S.C. 33106; delegation of authority at 49 CFR 1.50.

Issued on: August 20, 2012.

Christopher J. Bonanti,

Associate Administrator for Rulemaking.

[FR Doc. 2012–20837 Filed 8–23–12; 8:45 am]

BILLING CODE 4910–59–P

DEPARTMENT OF TRANSPORTATION

Surface Transportation Board

[Docket No. AB 55 (Sub-No. 716X)]

CSX Transportation, Inc.—Abandonment Exemption—in Niagara County, NY

CSX Transportation, Inc. (CSXT) filed a verified notice of exemption under 49 CFR part 1152 subpart F—*Exempt Abandonments* to abandon a 0.1-mile rail line on its Northern Region, Albany Division, Niagara Subdivision, between milepost QDN 28.0 near North Avenue to the end of the track at milepost QDN 28.1, in Niagara Falls, Niagara County, N.Y. The line traverses United States Postal Service Zip Code 14305.

CSXT has certified that: (1) No local traffic has moved over the line for at least 2 years; (2) any overhead traffic can be rerouted over other lines; (3) no formal complaint filed by a user of rail service on the line (or by a state or local government entity acting on behalf of such user) regarding cessation of service over the line either is pending with the Surface Transportation Board (Board) or with any U.S. District Court or has been decided in favor of a complainant within the 2-year period; and (4) the requirements at 49 CFR 1105.7(c) (environmental report), 49 CFR. 1105.11 (transmittal letter), 49 CFR 1105.12 (newspaper publication), and 49 CFR 1152.50(d)(1) (notice to governmental agencies) have been met.

As a condition to this exemption, any employee adversely affected by the abandonment shall be protected under *Oregon Short Line Railroad—Abandonment Portion Goshen Branch Between Firth & Ammon, in Bingham & Bonneville Counties, Idaho,* 360 I.C.C. 91 (1979). To address whether this condition adequately protects affected employees, a petition for partial revocation under 49 U.S.C. 10502(d) must be filed.

Provided no formal expression of intent to file an offer of financial assistance (OFA) has been received, this exemption will be effective on September 25, 2012, unless stayed pending reconsideration. Petitions to stay that do not involve environmental issues,[1] formal expressions of intent to file an OFA under 49 CFR 1152.27(c)(2),[2] and trail use/rail banking requests under 49 CFR 1152.29 must be filed by September 4, 2012. Petitions to reopen or requests for public use conditions under 49 CFR 1152.28 must be filed by September 13, 2012, with the Surface Transportation Board, 395 E Street SW., Washington, DC 20423–0001.

A copy of any petition filed with the Board should be sent to CSXT's representative: Louis E. Gitomer, Law Offices of Louis E. Gitomer, LLC, 600 Baltimore Avenue, Suite 301, Towson, MD 21204.

If the verified notice contains false or misleading information, the exemption is void *ab initio.*

CSXT has filed environmental and historic reports that address the effects, if any, of the abandonment on the environment and historic resources. OEA will issue an environmental assessment (EA) by August 31, 2012. Interested persons may obtain a copy of the EA by writing to OEA (Room 1100, Surface Transportation Board, Washington, DC 20423–0001) or by calling OEA at (202) 245–0305. Assistance for the hearing impaired is available through the Federal Information Relay Service (FIRS) at (800) 877–8339. Comments on environmental and historic preservation matters must be filed within 15 days after the EA becomes available to the public.

Environmental, historic preservation, public use, or trail use/rail banking conditions will be imposed, where appropriate, in a subsequent decision.

Pursuant to the provisions of 49 CFR 1152.29(e)(2), CSXT shall file a notice of consummation with the Board to signify that it has exercised the authority granted and fully abandoned the line. If consummation has not been effected by CSXT's filing of a notice of consummation by August 24, 2013, and there are no legal or regulatory barriers to consummation, the authority to abandon will automatically expire.

Board decisions and notices are available on our Web site at *www.stb.dot.gov.*

Decided: August 20, 2012.

By the Board, Rachel D. Campbell, Director, Office of Proceedings.

Raina S. White,

Clearance Clerk.

[FR Doc. 2012–20861 Filed 8–23–12; 8:45 am]

BILLING CODE 4915–01–P

---

[1] The Board will grant a stay if an informed decision on environmental issues (whether raised by a party or by the Board's Office of Environmental Analysis (OEA) in its independent investigation) cannot be made before the exemption's effective date. *See Exemption of Out-of-Serv. Rail Lines,* 5 I.C.C. 2d 377 (1989). Any request for a stay should be filed as soon as possible so that the Board may take appropriate action before the exemption's effective date.

[2] Each OFA must be accompanied by the filing fee. Effective August 26, 2012, the filing fee for an OFA increases from $1,500 to $1,600. *See* 49 CFR 1002.2(f)(25); *Regulations Governing Fees for Servs. Performed in Connection with Licensing & Related Servs.—2012 Update,* EP 542 (Sub-No. 20), slip op. app. B at 17 (STB served July 27, 2012).

DEPARTMENT OF TRANSPORTATION

Surface Transportation Board

[Docket No. AB 33 (Sub-No. 310X)]

Union Pacific Railroad Company—Abandonment Exemption—in Polk County, IA

Union Pacific Railroad Company (UP) has filed a verified notice of exemption under 49 CFR part 1152 subpart F—*Exempt Abandonments* to abandon a 5.8-mile line of railroad on the Ankeny Industrial Lead between milepost 4.7

near Des Moines and milepost 10.5 at the end of the line at Ankeny, in Polk County, Iowa (the line). The line traverses United States Postal Service Zip Codes 50313, 50021, and 50023.

UP has certified that: (1) No local traffic has moved over the line for the past two years; (2) there is no overhead traffic on the line; (3) no formal complaint filed by a user of rail service on the line (or by a state or local government entity acting on behalf of such user) regarding cessation of service over the line either is pending with the Surface Transportation Board (Board) or with any U.S. District Court or has been decided in favor of complainant within the two-year period; and (4) the requirements at 49 CFR 1105.7(c) (environmental report), 49 CFR 1105.11 (transmittal letter), 49 CFR 1105.12 (newspaper publication), and 49 CFR 1152.50(d)(1) (notice to governmental agencies) have been met.

As a condition to this exemption, any employee adversely affected by the abandonment shall be protected under *Oregon Short Line Railroad—Abandonment Portion Goshen Branch Between Firth & Ammon, in Bingham & Bonneville Counties, Idaho,* 360 I.C.C. 91 (1979). To address whether this condition adequately protects affected employees, a petition for partial revocation under 49 U.S.C. 10502(d) must be filed.

Provided no formal expression of intent to file an offer of financial assistance (OFA) has been received, this exemption will be effective on September 25, 2012, unless stayed pending reconsideration. Petitions to stay that do not involve environmental issues,[1] formal expressions of intent to file an OFA under 49 CFR 1152.27(c)(2),[2] and trail use/rail banking requests under 49 CFR 1152.29 must be filed by September 4, 2012. Petitions to reopen or requests for public use conditions under 49 CFR 1152.28 [3] must be filed by September 13, 2012, with the Surface Transportation Board, 395 E Street SW., Washington, DC 20423–0001.

A copy of any petition filed with the Board should be sent to UP's representative: Mack H. Shumate, Jr., Senior General Attorney, 101 North Wacker Drive, #1920, Chicago, IL 60606.

If the verified notice contains false or misleading information, the exemption is void *ab initio.*

UP has filed a combined environmental and historic report that addresses the effects, if any, of the abandonment on the environment and historic resources. OEA will issue an environmental assessment (EA) by August 31, 2012. Interested persons may obtain a copy of the EA by writing to OEA (Room 1100, Surface Transportation Board, Washington, DC 20423–0001) or by calling OEA at (202) 245–0305. Assistance for the hearing impaired is available through the Federal Information Relay Service at 1–800–877–8339. Comments on environmental and historic preservation matters must be filed within 15 days after the EA becomes available to the public.

Environmental, historic preservation, public use, or trail use/rail banking conditions will be imposed, where appropriate, in a subsequent decision.

Pursuant to the provisions of 49 CFR 1152.29(e)(2), UP shall file a notice of consummation with the Board to signify that it has exercised the authority granted and fully abandoned the line. If consummation has not been effected by UP's filing of a notice of consummation by August 24, 2013, and there are no legal or regulatory barriers to consummation, the authority to abandon will automatically expire.

Board decisions and notices are available on our Web site at *www.stb.dot.gov.*

Decided: August 20, 2012.

By the Board, Rachel D. Campbell, Director, Office of Proceedings.

Derrick A. Gardner,

Clearance Clerk.

[FR Doc. 2012–20873 Filed 8–23–12; 8:45 am]

BILLING CODE 4915–01–P

[1] The Board will grant a stay if an informed decision on environmental issues (whether raised by a party or by the Board's Office of Environmental Analysis (OEA) in its independent investigation) cannot be made before the exemption's effective date. *See Exemption of Out-of-Serv. Rail Lines,* 5 I.C.C.2d 377 (1989). Any request for a stay should be filed as soon as possible so that the Board may take appropriate action before the exemption's effective date.

[2] Each OFA must be accompanied by the filing fee. Effective August 26, 2012, the filing fee for an OFA increases from $1,500 to $1,600. *See* 49 CFR 1002.2(f)(25); *Regulations Governing Fees for Servs. Performed in Connection with Licensing and Related Servs.—2012 Update,* EP No. 542 (Sub-No. 20) (STB served July 27, 2012).

[3] UP states that the right-of-way (ROW) is not suitable for public purposes, including roads or highways, other forms of mass transportation, conservation, energy production or transmission as this area is adequately served by existing roads and utility lines at the present time. However, UP notes that there does appear to be local interest in use of the ROW as a public recreational trail for hiking and bicycle use.

DEPARTMENT OF TRANSPORTATION

Surface Transportation Board

[Docket No. FD 35662]

DMH Trust fbo Martha M. Head—Acquisition of Control Exemption—Twin Cities & Western Railroad Company, Minnesota Prairie Line, Inc. and Sisseton Milbank Railroad Company

DMH Trust fbo Martha M. Head (the Trust), a noncarrier, has filed a verified notice of exemption to acquire control of Twin Cities & Western Railroad Company (TCW), Minnesota Prairie Line, Inc. (MPL), and Sisseton Milbank Railroad Company (SMRC),[1] all Class III rail carriers.

According to the Trust, Douglas M. Head owned all of the controlling shares of voting stock of TCW and indirectly controlled MPL and SMRC. Following his death in February 2011, TCW's stock continues to be held by Mr. Head's estate, which now desires to distribute this stock to the Trust. The Trust intends to consummate the transaction on or after September 10, 2012 (the effective date of the exemption is September 9, 2012, 30 days after the verified notice of exemption was filed).

The Trust represents that: (1) TCW, MPL, and SMRC will not connect with any rail lines owned or controlled by the Trust; (2) the transaction is not part of a series of anticipated transactions that would connect any railroad owned or controlled by the Trust with TCW, MPL, or SMRC, or that would provide an additional connection between any of the carriers controlled by the Trust; and (3) the transaction does not involve a Class I rail carrier. The proposed transaction is therefore exempt from the prior approval requirements of 49 U.S.C. 11323 pursuant to 49 CFR 1180.2(d)(2). The Trust states that the purpose of the transaction is to transfer the TCW shares from the estate of Mr. Head to the Trust in compliance with provisions of Mr. Head's will, allowing the substantial completion of the probate of the estate.

Under 49 U.S.C. 10502(g), the Board may not use its exemption authority to relieve a rail carrier of its statutory obligation to protect the interests of its employees. Section 11326(c), however, does not provide for labor protection for transactions under 11324 and 11325 that involve only Class III rail carriers. Accordingly, the Board may not impose labor protective conditions here, because all of the carriers involved are Class III carriers.

[1] MPL and SMRC are wholly owned subsidiaries of TCW.

If the verified notice contains false or misleading information, the exemption is void *ab initio.* Petitions to revoke the exemption under 49 U.S.C. 10502(d) may be filed at any time. The filing of a petition to revoke will not automatically stay the effectiveness of the exemption. Petitions for stay must be filed no later than August 31, 2012 (at least seven days before the exemption becomes effective).

An original and ten copies of all pleadings, referring to Docket No. FD 35662, must be filed with the Surface Transportation Board, 395 E Street SW., Washington, DC 20423–0001. In addition, a copy of each pleading must be served on Rose-Michele Nardi, Weiner Brodsky Sidman Kider PC, 1300 19th Street NW., Fifth Floor, Washington, DC 20036.

Board decisions and notices are available on our Web site at *www.stb.dot.gov.*

Decided: August 20, 2012.

By the Board, Rachel D. Campbell, Director, Office of Proceedings.

Derrick A. Gardner,

Clearance Clerk.

[FR Doc. 2012–20864 Filed 8–23–12; 8:45 am]

BILLING CODE 4915–01–P

DEPARTMENT OF THE TREASURY

Community Development Financial Institutions Fund

Open Meeting of the Community Development Advisory Board

AGENCY: Community Development Financial Institutions Fund, Department of the Treasury.

ACTION: Notice of open meeting.

SUMMARY: This notice announces the next meeting of the Community Development Advisory Board (the Advisory Board), which provides advice to the Director of the Community Development Financial Institutions Fund (the CDFI Fund). The meeting will be conducted via telephone conference call.

DATES: The next meeting of the Advisory Board will be held from 2 p.m. to 3:30 p.m. Eastern Time on Wednesday, September 12, 2012.

FOR FURTHER INFORMATION CONTACT: The Office of Public and Legislative Affairs of the CDFI Fund, 1500 Pennsylvania Avenue NW., Washington, DC 20220, (202) 622–8042 (this is not a toll free number). Other information regarding the CDFI Fund and its programs may be obtained through the CDFI Fund's Web site at *http://www.cdfifund.gov.* Public participation will be limited to 50 individual phone lines. Notification of intent to attend the meeting must be made via email to *advisoryboard@cdfi.treas.gov.* The CDFI Fund will send confirmation of attendance and instructions on accessing the meeting to the first 50 individuals who submit notifications of intent.

SUPPLEMENTARY INFORMATION: Section 104(d) of the Community Development Banking and Financial Institutions Act of 1994 (12 U.S.C. 4703(d)) established the Advisory Board. The charter for the Advisory Board has been filed in accordance with the Federal Advisory Committee Act, as amended (5 U.S.C. App.), and with the approval of the Secretary of the Treasury.

The function of the Advisory Board is to advise the Director of the CDFI Fund (who has been delegated the authority to administer the CDFI Fund) on the policies regarding the activities of the CDFI Fund. The Advisory Board does not advise the CDFI Fund on approving or declining any particular application for monetary or non-monetary awards. The Advisory Board meets at least annually.

It has been determined that this document is not a major rule as defined in Executive Order 12291 and therefore regulatory impact analysis is not required. In addition, this document does not constitute a rule subject to the Regulatory Flexibility Act (5 U.S.C. Chapter 6).

The next meeting of the Advisory Board, all of which will be open to the public, will be held from 2 p.m. to 3:30 p.m. Eastern Time on Wednesday, September 12, 2012 via a telephone conference call. Public participation will be limited to 50 individual phone lines. Notification of intent to attend the meeting must be made via email to *advisoryboard@cdfi.treas.gov.* The CDFI Fund will send confirmation of attendance and instructions on accessing the meeting to the first 50 individuals who submit notifications of intent. For more information, please call (202) 622–8042.

Participation in the discussions at the meeting will be limited to Advisory Board members, Department of the Treasury staff, and certain invited guests. Anyone who would like to have the Advisory Board consider a written statement must submit it to the Office of Legislative and External Affairs, CDFI Fund, 1500 Pennsylvania Avenue NW., Washington, DC 20220, by 5 p.m. Eastern Time on Tuesday, September 4, 2012.

Authority: 12 U.S.C. 4703; Chapter X, Pub. L. 104–19, 109 Stat. 237.

Dated: August 16, 2012.

Donna J. Gambrell,

Director, Community Development Financial Institutions Fund.

[FR Doc. 2012–20860 Filed 8–23–12; 8:45 am]

BILLING CODE 4810–70–P

DEPARTMENT OF THE TREASURY

Office of Foreign Assets Control

Additional Designations, Foreign Narcotics Kingpin Designation Act

AGENCY: Office of Foreign Assets Control, Treasury.

ACTION: Notice.

SUMMARY: The U.S. Department of the Treasury's Office of Foreign Assets Control (''OFAC'') is publishing the names of 2 individuals and 24 entities whose property and interests in property have been blocked pursuant to the Foreign Narcotics Kingpin Designation Act (''Kingpin Act'') (21 U.S.C. 1901–1908, 8 U.S.C. 1182).

DATES: The designation by the Director of OFAC of the two individuals and 24 entities identified in this notice pursuant to section 805(b) of the Kingpin Act is effective on August 15, 2012.

FOR FURTHER INFORMATION CONTACT: Assistant Director, Sanctions Compliance & Evaluation, Office of Foreign Assets Control, U.S. Department of the Treasury, Washington, DC 20220, Tel: (202) 622–2490.

SUPPLEMENTARY INFORMATION:

Electronic and Facsimile Availability

This document and additional information concerning OFAC are available on OFAC's Web site at *http://www.treasury.gov/ofac* or via facsimile through a 24-hour fax-on-demand service at (202) 622–0077.

Background

The Kingpin Act became law on December 3, 1999. The Kingpin Act establishes a program targeting the activities of significant foreign narcotics traffickers and their organizations on a worldwide basis. It provides a statutory framework for the imposition of sanctions against significant foreign narcotics traffickers and their organizations on a worldwide basis, with the objective of denying their businesses and agents access to the U.S. financial system and the benefits of trade and transactions involving U.S. companies and individuals.

The Kingpin Act blocks all property and interests in property, subject to U.S. jurisdiction, owned or controlled by

significant foreign narcotics traffickers as identified by the President. In addition, the Secretary of the Treasury, in consultation with the Attorney General, the Director of the Central Intelligence Agency, the Director of the Federal Bureau of Investigation, the Administrator of the Drug Enforcement Administration, the Secretary of Defense, the Secretary of State, and the Secretary of Homeland Security may designate and block the property and interests in property, subject to U.S. jurisdiction, of persons who are found to be: (1) Materially assisting in, or providing financial or technological support for or to, or providing goods or services in support of, the international narcotics trafficking activities of a person designated pursuant to the Kingpin Act; (2) owned, controlled, or directed by, or acting for or on behalf of, a person designated pursuant to the Kingpin Act; or (3) playing a significant role in international narcotics trafficking.

On August 15, 2012, the Director of OFAC designated the following two individuals and 24 entities whose property and interests in property are blocked pursuant to section 805(b) of the Kingpin Act.

Individuals

1. CASTELLANOS CHACON, Christina Stetanel (a.k.a. ''CHRISTA CASTELLANOS''); DOB 17 Jun 1991; nationality Guatemala; Passport 133374328 (Guatemala) (individual) [SDNTK].
2. SAENZ LEHNHOFF, Maria Corina (a.k.a. DE DEL PINAL, Maria Corina; a.k.a. SAENZ LEHNHOFF, Maria Gabriela; a.k.a. SAENZ PINAL, Maria Corina); DOB 19 May 1965; POB Guatemala; nationality Guatemala; Passport 31486K (Guatemala) (individual) [SDNTK] Linked To: INMOBILIARIA DATEUS; Linked To: WALNUTHILL; Linked To: CABOMARZO; Linked To: GRUPO MPV; Linked To: DELPSA; Linked To: BRODWAY COMMERCE INC.; Linked To: CASA VOGUE.

Entities

3. ALMACEN PICIS, 3 Avenida 19–59, Local 14, Zona 1, Guatemala City, Guatemala; Registration ID 80617 (Guatemala) [SDNTK].
4. ALQUILERES ROSSELL, Km 12.5 Carrertera Al Salvador, Santa Rosalia, Condominio La Laguna, Casa 1, Guatemala, Guatemala; Registration ID 388175 (Guatemala) [SDNTK].
5. AUTO HOTEL PUNTO CERO, Kilometro 49.5 Carretera A El Salvador, Aldea El Cerinal, Barberena, Santa Rosa, Guatemala; Registration ID 404256 (Guatemala) [SDNTK].
6. BODEGAS BANYOLAS, 14 Avenida 7–12 Zona 14, Centro Empresarial La Villa Bodega 23, Guatemala City, Guatemala; Registration ID 71152 (Guatemala) [SDNTK].
7. BOUTIQUE MARLLORY, KM 54.5 Carretera Al Salvador, Santa Rosa, Barberena, Guatemala; Registration ID 159497A (Guatemala) [SDNTK].
8. BRODWAY COMMERCE INC., 17 Calle A 7–21, Zona 10, Guatemala City, Guatemala; Registration ID 60832 (Guatemala) [SDNTK].
9. CABOMARZO, 3A Calle 3–46, Zona 2, Residenciales Valles De Maria, Villa Nueva, Guatemala; Registration ID 89276 (Guatemala) [SDNTK].
10. CASA VOGUE, Km 14.1 Carretera El Salvador, Centro Comercial Paseo San Sebastian Local 92, Guatemala City, Guatemala [SDNTK].
11. CORPORACION DAIMEX S.A., 14 Avenida 7–12, Zona 14, Bodega No. 22, Empresarial La Villa, Guatemala City, Guatemala; Registration ID 36397 (Guatemala) [SDNTK].
12. DELPSA, 2 Calle 25–80, Zona 15, Vista Hermosa II, Apt. 800, Guatemala City, Guatemala; Registration ID 200766 (Guatemala) [SDNTK].
13. DIGITAL SYS ADVISORS, 14 Avenida 7–12 Zona 14, Bodega 22, Empresarial La Villa, Guatemala City, Guatemala; Registration ID 68326 (Guatemala) [SDNTK].
14. DISTRIBUIDORA ROSSELL, Calzada Roosevelt KM, 13 40–31, Zona 11, Guatemala City, Guatemala; Registration ID 388221 (Guatemala) [SDNTK].
15. ESTRUCTURAS METALICAS, CIRCULARES Y ORTOGONALES (a.k.a. ''EMCO''), Aldea El Durazno Lote 12 Kilometro 8.5, Antigua Ruta A San Pedro Ayampuc, Chinautla, Guatemala; Registration ID 45703 (Guatemala) [SDNTK].
16. FARFAR, 14 Avenida 7–12 Zona 14, Bodega 22, Empresarial La Villa, Guatemala City, Guatemala; Registration ID 75563 (Guatemala) [SDNTK].
17. FERNAPLAST, Km 12–5 Ruta Al Atlantico, Apto. A, Zona 18, Guatemala City, Guatemala; Registration ID 188919A (Guatemala) [SDNTK].
18. GRUPO MPV, Km 14.1 Carretera El Salvador, Centro Comercial Paseo San Sebastian Local 92, Guatemala City, Guatemala; Registration ID 55544 (Guatemala) [SDNTK].
19. HACIENDA SANTA INES, 3 Avenida 13–46 Zona 1, Guatemala City, Guatemala; Registration ID 319945 (Guatemala) [SDNTK].
20. HUERTAS Y HORTALIZAS, Lote 10 Aldea Las Vacas, Zona 16, Guatemala City, Guatemala; Registration ID 49720 (Guatemala) [SDNTK].
21. IMPORTADORA BORRAYO LASMIBAT, 13 Av 26–49, San Jose Las Rosas Zona 8, Guatemala City, Guatemala; Registration ID 135027 [SDNTK].
22. INMOBILIARIA DATEUS, 1era Avenida 7–60, Zona 14, Apartamento 1602 Del Edificio Tadeus, Guatemala City, Guatemala; Registration ID 84101 (Guatemala) [SDNTK].
23. INVERSIONES A&E, 8 Avenida 16–49 Zona 10, Edificio San Ignacio Apto. 2–A, Guatemala City, Guatemala; Registration ID 43339 (Guatemala) [SDNTK].
24. OPERADORA CORPORATIVA DE NEGOCIOS (a.k.a. ''OCN''), Diagnol 6 No. 16–01, Zona 10, Guatemala City, Guatemala [SDNTK].
25. SISTEMAS CONSTRUCTORES (a.k.a. ''SICONSA''), Lote 10, Aldea Las Vacas, Zona 16, Guatemala City, Guatemala; Registration ID 34279 (Guatemala) [SDNTK].
26. WALNUTHILL, Diagnol 6 10–01, Zona 10, Centro Gerencial Las Margaritas, Torre II, Of. 301–B, Guatemala City, Guatemala; Registration ID 80886 (Guatemala) [SDNTK].

Dated: August 15, 2012.

Barbara C. Hammerle,

Acting Director, Office of Foreign Assets Control.

[FR Doc. 2012–20954 Filed 8–23–12; 8:45 am]

BILLING CODE 4810–AL–P

FEDERAL REGISTER

Vol. 77 Friday,

No. 165 August 24, 2012

Part II

Environmental Protection Agency

40 CFR Part 49

Source Specific Federal Implementation Plan for Implementing Best Available Retrofit Technology for Four Corners Power Plant: Navajo Nation; Final Rule

ENVIRONMENTAL PROTECTION AGENCY

40 CFR Part 49

[EPA–R09–OAR–2010–0683; FRL–9715–9]

Source Specific Federal Implementation Plan for Implementing Best Available Retrofit Technology for Four Corners Power Plant: Navajo Nation

AGENCY: Environmental Protection Agency (EPA).

ACTION: Final rule.

SUMMARY: The Environmental Protection Agency (EPA) is promulgating a source-specific Federal Implementation Plan (FIP) requiring the Four Corners Power Plant (FCPP), a coal-fired power plant located on the Navajo Nation near Farmington, New Mexico, to achieve emissions reductions required by the Clean Air Act's (CAA) Best Available Retrofit Technology (BART) provision. In this final action, EPA is requiring FCPP to reduce emissions of oxides of nitrogen (NO_X) and is setting emission limits for particulate matter (PM) based on emission rates already achieved at FCPP. These pollutants contribute to visibility impairment in the numerous mandatory Class I Federal areas surrounding FCPP. For NO_X emissions, EPA is requiring FCPP to meet a plant-wide emission limit of 0.11 lb/MMBtu on a rolling 30-day heat input-weighted average. This represents an 80 percent reduction from the current NO_X emission rate and is expected to provide significant improvement in visibility. EPA is also finalizing an alternative emission control strategy that gives the owners of FCPP the option to close Units 1–3 and install controls on Units 4 and 5 to each meet an emission limit of 0.098 lb/MMBtu, based on a rolling average of 30 successive boiler operating days. For PM, EPA is requiring Units 4 and 5 at FCPP to meet an emission limit of 0.015 lb/MMBtu, and retaining the existing 20 percent opacity limit. These PM limits are achievable through the proper operation of the existing baghouses. EPA is also requiring FCPP to comply with a 20 percent opacity limit on its coal and material handling operations.

DATES: *Effective Date:* This rule is effective on October 23, 2012.

FOR FURTHER INFORMATION CONTACT: Anita Lee, EPA Region 9, (415) 972–3958, *r9air_fcppbart@epa.gov.*

SUPPLEMENTARY INFORMATION: EPA has established a docket for this action under Docket ID No. EPA–R09–OAR–2010–0683. The index to the docket for this action is available electronically at *http://www.regulations.gov* and in hard copy at EPA Region 9, 75 Hawthorne Street, San Francisco, California. While all documents in the docket are listed in the index, some information may be publicly available only at the hard copy location (*e.g.* copyrighted material), and some may not be publicly available in either location (*e.g.* Confidential Business Information (CBI)). To inspect the hard copy materials, please schedule an appointment during normal business hours with the contact listed in the **FOR FURTHER INFORMATION CONTACT** section. A reasonable fee may be charged for copies.

Throughout this document, ''we'', ''us'', and ''our'' refer to EPA.

Table of Contents

I. Background of the Final Rule
II. Summary of Final Federal Implementation Plan (FIP) Provisions
III. Analysis of Major Issues Raised by Commenters
A. Comments on Factor One—Cost of Controls
1. Comments on the Analysis of the Cost of SCR at FCPP
2. Comments on Top-Down Analysis Versus Incremental Cost Effectiveness
B. Comments on Factor Two—Economic, Energy, and Non-Air Quality Environmental Impacts
1. Comments on Economic Impacts
a. General Comments on Economic Impacts
b. Comments on EPA's Economic Analysis
2. Comments on Energy and Non-Air Quality Environmental Impacts
C. Comments on Factor Three—Existing Controls at FCPP
D. Comments on Factor Four—Remaining Useful Life at FCPP
E. Comments on Factor Five—Anticipated Visibility Improvements
F. Comments on BART Determinations
1. Comments on the Proposed BART Determination for NO_X
2. Comments on the Proposed BART Determination for PM
3. Comments on BART for SO_2
4. Other Comments on BART
G. Comments on Arizona Public Service's Alternative and EPA's Supplemental Proposal
H. Other Comments
IV. Administrative Requirements
A. Executive Order 12866: Regulatory Planning and Review and Executive Order 13563: Improving Regulation and Regulatory Review
B. Paperwork Reduction Act
C. Regulatory Flexibility Act
D. Unfunded Mandates Reform Act
E. Executive Order 13132: Federalism
F. Executive Order 13175: Consultation and Coordination With Indian Tribal Governments
G. Executive Order 13045: Protection of Children From Environmental Health Risks and Safety Risks
H. Executive Order 13211: Actions Concerning Regulations That Significantly Affect Energy Supply, Distribution, or Use
I. National Technology Transfer and Advancement Act
J. Executive Order 12898: Federal Actions To Address Environmental Justice in Minority Populations and Low-Income Populations
K. Congressional Review Act
L. Petitions for Judicial Review

I. Background of the Final Rule

FCPP is a privately owned and operated coal-fired power plant located on the Navajo Nation Indian Reservation near Farmington, New Mexico. Based on lease agreements signed in 1960, FCPP was constructed and has been operating on real property held in trust by the Federal government for the Navajo Nation. The facility consists of five coal-fired electric utility steam generating units with a total capacity of 2060 megawatts (MW). Units 1, 2, and 3 at FCPP are owned entirely by Arizona Public Service (APS) which serves as the facility operator, and are rated to 170 MW (Units 1 and 2) and 220 MW (Unit 3). Units 4 and 5 are each rated to a capacity of 750 MW, and are co-owned by six entities: Southern California Edison [1] (48 percent), APS (15 percent), Public Service Company of New Mexico (13 percent), Salt River Project (SRP) (10 percent), El Paso Electric Company (7 percent), and Tucson Electric Power (7 percent).

EPA's proposed BART determination for FCPP, published on October 19, 2010, provided a thorough discussion of the statutory and regulatory framework for addressing visibility through application of BART for sources located in Indian country, and of the factual background for BART determinations at FCPP. 75 FR 64221.

On February 25, 2011, as a result of additional information provided by stakeholders, EPA published a Supplemental Proposal. FR 76 10530. We briefly summarize the provisions of our Proposal and our Supplemental Proposal below.

Part C Subpart II of the 1977 CAA establishes a visibility protection program that sets forth ''as a national goal the prevention of any future, and the remedying of any existing, impairment of visibility in mandatory class I Federal areas which impairment results from manmade air pollution.'' 42 U.S.C. 7491A(a)(1). EPA promulgated regional haze regulations on April 22, 1999. 64 FR 35765. Consistent with the statutory requirement in 42 U.S.C. 7491(b)(2)(a), EPA's 1999 regional haze

[1] Arizona Public Service is currently seeking regulatory approvals to purchase Southern California Edison's share of Units 4 and 5.

regulations include a provision requiring States to require certain major stationary sources to procure, install and operate BART. This provision covers sources ''in existence on August 7, 1977, but which ha[ve] not been in operation for more than fifteen years as of such date'' and which emit pollutants that are reasonably anticipated to cause or contribute to any visibility impairment. EPA has determined that FCPP is a BART-eligible source (75 FR 64221).

In determining BART, States are required to take into account five factors identified in the CAA and EPA's regulations. 42 U.S.C. 7491(g)(2) and 40 CFR 51.308. Those factors are: (1) The costs of compliance, (2) the energy and non-air quality environmental impacts of compliance, (3) any pollution control equipment in use or in existence at the source, (4) the remaining useful life of the source, and (5) the degree of improvement in visibility which may reasonably be anticipated to result from the use of such technology. 40 CFR 51.308(e)(1)(ii)(A). EPA's guidelines for evaluating BART are set forth in Appendix Y to 40 CFR Part 51.

In 1998, EPA promulgated the Tribal Authority Rule (TAR) relating to implementation of CAA programs in Indian country. *See* 40 CFR part 49; *see* also 59 FR 43956 (Aug. 25, 1994) (proposed rule); 63 FR 7254 (Feb. 12, 1998) (final rule); *Arizona Public Service Company* v. *EPA,* 211 F.3d 1280 (DC Cir. 2000), *cert. den.,* 532 U.S. 970 (2001) (upholding the TAR).

In the TAR, EPA determined that it has the discretionary authority to promulgate ''such federal implementation plan provisions as are necessary or appropriate to protect air quality'' consistent with CAA sections 301(a) and 301(d)(4) when a Tribe has not submitted or EPA has not approved a Tribal Implementation Plan (TIP). 40 CFR 49.11(a).

EPA has previously promulgated FIPs under the TAR to regulate air pollutants emitted from FCPP. In 1999, EPA proposed a FIP for FCPP. That FIP proposed to fill the regulatory gap that existed because New Mexico permits and State Implementation Plan (SIP) rules are not applicable or enforceable in the Navajo Nation, and the Tribe had not sought approval of a TIP covering the plant. 64 FR 48731 (Sept. 8, 1999).

Before EPA finalized the 1999 FIP, the operator of FCPP began negotiations to reduce SO_2 emissions from FCPP by making upgrades to improve the efficiency of its SO_2 scrubbers. The parties to the negotiations requested EPA to make those SO_2 reductions enforceable through a source-specific FIP. Therefore, EPA proposed a new FIP for FCPP in September 2006. 71 FR 53631 (Sept. 12, 2006). In the final FIP, EPA indicated that the new SO_2 emissions limits were close to or the equivalent of the emissions reductions that would have been required in a BART determination. 72 FR 25698 (May 7, 2007). The FIP also required FCPP to comply with a 20 percent opacity limit on both the combustion and fugitive dust emissions from material handling operations.

APS, the operator of FCPP, and Sierra Club each filed Petitions seeking judicial review of EPA's promulgation of the 2007 FIP for FCPP on separate grounds. The Court of Appeals for the Tenth Circuit rejected both Petitions. The Court agreed with EPA's request for a voluntary remand of a single narrow aspect of the 2007 FIP: The opacity limit for the fugitive dust for the material handling operations. Id. At 1131.

On October 19, 2010 (75 FR 64221) EPA proposed a second FIP under 40 CFR 49.11(a) finding it is necessary or appropriate to establish BART requirements for NO_X and PM emissions from FCPP, and proposed specific NO_X and PM limits as BART. For NO_X, EPA proposed a plant-wide emission limit of 0.11 lb/MMBtu, representing an 80 percent reduction from current NO_X emission rates, achievable by installing and operating SCR technology on Units 1–5. For PM, EPA proposed an emission limit of 0.012 lb/MMBtu for Units 1–3 and 0.015 lb/MMBtu for Units 4 and 5 achievable by installing and operating any of several equivalent controls on Units 1–3, and through proper operation of the existing baghouses on Units 4 and 5. EPA also proposed a 10 percent opacity limit from Units 1–5 and a 20 percent opacity limit to apply to FCPP's material handling operations to respond to the voluntary remand EPA took on this issue from the 2007 FIP.

On November 24, 2010, APS, acting on behalf of FCPP's owners, submitted a letter to EPA offering an alternative to reduce visibility-impairing pollution. APS proposed to close Units 1–3 by 2014 and install and operate SCR on Units 4 and 5 to each meet an emission limit of 0.11 lb/MMBtu by the end of 2018. On February 25, 2011, we published a Supplemental Proposal (76 FR 10530) with a technical evaluation of APS' alternative. Our Supplemental Proposal also provides a detailed summary of the legal background for proposing an alternative emission control strategy as achieving better progress towards the national visibility goal (76 FR 10530).

In our Supplemental Proposal, EPA proposed to allow APS the option to comply with the alternative emission control strategy in lieu of complying with our October 19, 2010, proposed BART determination. EPA's alternative emission control strategy involved closure of Units 1–3 by 2014 and installation and operation of add-on post combustion controls on Units 4 and 5 to each meet a NO_X emission limit of 0.098 lb/MMBtu by July 31, 2018. EPA proposed that this alternative emission control strategy represents reasonable progress towards the national visibility goal, under CAA Section 169A(b)(2), because it would result in greater visibility improvement in surrounding Class I areas at a lower cost than our October 19, 2010, BART proposal. The proposal to require PM and opacity limits on Units 1–5, as well as 20 percent opacity limits for controlling dust from coal and ash handling and storage facilities, was unchanged.

II. Summary of Final FIP Provisions

EPA is finding today that it is necessary or appropriate to promulgate a source-specific FIP requiring FCPP to achieve emissions reductions required by the CAA's BART provision. Specifically, EPA is requiring FCPP to meet new emissions limits for NO_X and PM. These pollutants contribute to visibility impairment in the 16 mandatory Class I Federal areas surrounding FCPP. For NO_X emissions, EPA is finalizing a BART determination as well as an optional alternative to BART. FCPP can choose which emissions control strategy to follow and must notify EPA of its choice by July 1, 2013. Our final BART determination requires FCPP to meet a plant-wide heat input-weighted emission limit of 0.11 lb/MMBtu on a rolling 30-calendar day average which represents an 80 percent reduction from current NO_X emission rates. This NO_X limit is achievable by installing and operating add-on post-combustion controls on Units 1–5. Installation and operation of the new NO_X controls on one 750 MW unit must be within 4 years of October 23, 2012. NO_X controls on the remaining units must be installed and operated within 5 years of October 23, 2012.

Alternatively, FCPP may choose to comply with an alternative emission control strategy for NO_X in lieu of complying with EPA's final BART determination for NO_X. This alternative emission control strategy requires permanent closure of Units 1–3 by January 1, 2014, and installation and operation of add-on post combustion controls on Units 4 and 5 to meet a NO_X emission limit of 0.098 lb/MMBtu each, based on a rolling average of 30

successive boiler operating days, by July 31, 2018.

For PM, EPA is requiring Units 4 and 5 to meet a BART emission limit of 0.015 lb/MMBtu within 60 days after restart following the scheduled major outages for Units 4 and 5 in 2013 and 2014. This emission limit is achievable through the proper operation of the existing baghouses. EPA is determining that it is not necessary or appropriate to finalize our proposed PM BART determination for Units 1–3 or our proposed opacity limit of 10 percent on Units 1–5. FCPP must continue to meet the existing 20 percent opacity limit on Units 1–5.

To address our voluntary remand of the material handling requirements from the 2007 FIP, EPA is finalizing our proposal to require FCPP to comply with a 20 percent opacity limit on its material handling operations, including coal handling.

In our final rule, EPA has made several revisions to the proposed rule and Supplemental Proposal based on comments we received during the public comment period. These revisions include: revising the compliance date under BART from within 3 to 5 years [2] of the effective date of the final rule to within 4 to 5 years [3] of the effective date; revising the interim limits to only include an interim limit for one 750 MW unit rather than all units to match the revised compliance timeframes; adding 6 months to the notification dates to EPA on APS's plans to implement BART or the BART Alternative; revising the averaging time for the NO_X limit under the BART Alternative from a 30-day average to a rolling average of 30 successive boiler operating days; retaining the existing opacity limit of 20 percent instead of setting a new 10 percent opacity limit on Units 1–5; determining that it is not necessary or appropriate at this time to finalize a BART determination for PM for Units 1–3; and revising the effective date of the PM emission limit for Units 4 and 5 to the next schedule major outage rather than following installation of new post-combustion NO_X controls. We include the rationale for these revisions in our responses to comments. All comments we received are included in the docket and EPA has summarized and responded to all comments in a separate Response to Comments (RTC) document that is also included in the docket for this final rulemaking. In this **Federal Register** notice, EPA is including a summary of the major comments we received and a summary of our responses.

III. Summary of Major Issues Raised by Commenters

Our October 19, 2010, proposal included a 60-day public comment period that ended on December 20, 2010. On November 12, 2010, EPA published a notice of public hearings to be held in the Four Corners area on December 7–9, 2010 (75 FR 69374). On December 8, 2010, EPA published in the **Federal Register** a notice that EPA received an alternative proposal from APS and would be extending the public comment period to March 18, 2011, and postponing the previously scheduled public hearings in order to evaluate that alternative proposal (75 FR 76331). Notices of public hearings and rescheduled hearings were published in three newspapers near the Four Corners Power Plant [4]. Our supplemental proposal on February 25, 2011, subsequently extended the public comment period until May 2, 2011, and announced four public hearings on the proposed BART determination and supplemental proposal in the Four Corners area on March 29, 30, and 31, 2011. In all, 90 oral testimonies were presented at the public hearings.

We received nearly 13,000 written comments. Of these, over 12,800 comments came from private citizens who submitted substantially similar comments. We received an additional 110 unique written comments (not including duplicates, requests for extension of the public comment period, or requests for additional hearings). We do not consider or address letters or comments unrelated to the rulemaking in this notice or in our response to comments document. The unique comments can be broken down by general type as follows: 78 from private citizens, eight from environmental advocacy groups, four from the owners of FCPP, five from state/local government entities, four from public interest advocacy groups, two from tribes, four from utility industry associations, three from federal agencies, one from a U.S. Senator, and one from the operator of the Navajo Mine.

A. Comments on Factor One—Cost of Controls

We received a number of comments on our approach for estimating the cost of SCR at FCCP, the incremental cost effectiveness of controls, and on our top-down approach for evaluating controls.

1. Comments on the Analysis of the Cost of SCR at FCPP

Comment: Some of the owners of FCPP and a utility industry association stated that in analyzing the cost of SCR at FCPP, EPA improperly reworked and reduced the SCR cost estimates submitted for FCPP by eliminating line item costs that are not explicitly included in the *EPA Control Cost Manual* (citing 75 FR 64227). Commenters noted that APS' estimate was prepared by B&V, an engineering firm with extensive experience with the installation and operation of pollution control equipment and that the prices used in the cost analysis were based on quotes from equipment vendors that reflected current pricing.

Response: EPA disagrees with the comment that EPA improperly reworked and reduced the SCR cost estimates. EPA used a hybrid approach for our cost analysis that relied primarily on the highest of several cost estimates provided by APS, but also followed the BART Guidelines that state ''[i]n order to maintain and improve consistency, cost estimates should be based on the *OAQPS Control Cost Manual,* where possible'',[5] to determine whether APS included cost estimates for services or equipment associated with SCR that were either not needed (*e.g.,* mitigation for increased sulfuric acid emissions or catalyst disposal), or not allowed under the *EPA Control Cost Manual* (*e.g.,* legal fees).

Our cost analysis relied primarily on the highest cost estimates submitted by APS. EPA accepted all site-specific costs provided by APS for cost categories (*e.g.,* purchased equipment, installation) that are typically included in a cost estimate conducted in accordance with the *EPA Control Cost Manual,* and only excluded line item costs that are not explicitly included in the *EPA Control Cost Manual* or in a limited number of cases where EPA determined alternative

[2] We proposed to require phased installation of add-on NO_X controls on at least 560 MW of generation within 3 years of the effective date of the final rule, on at least 1310 MW of generation within 4 years of the effective date, and plant-wide within 5 years of the effective date.

[3] We are finalizing the rule to require phased installation of add-on NO_X controls on at least 750 MW of generation within 4 years of the effective date and on the remaining units within 5 years of the effective date.

[4] Notices of scheduled public hearings were published in the Farmington Daily Times and the Durango Herald on November 3, 2010 and February 17, 2011, and the Navajo Times on November 4, 2010 and February 17, 2011. Notices of the extended public comment period and postponement of the December public hearings were published in the Farmington Daily Times and the Durango Herald on November 24, 2010 and in the Navajo Times on December 2, 2010.

[5] The OAQPS Control Cost Manual is now called the EPA Control Cost Manual. The EPA Control Cost Manual is available from the following Web site: *http://www.epa.gov/ttncatc1/products.html#cccinfo.*

costs were more appropriate (*e.g.,* costs of catalysts, interest rates). We note that EPA's cost estimate presented in the Technical Support Document (TSD)[6] ($718 million total for Units 1–5) is only 18 percent lower than the highest B&V cost estimate and less than 0.6 percent lower than the lowest and most recent B&V cost estimate.

Our detailed, line-by-line analysis [7] was included in the docket for our proposed rulemaking and provided an explanation for why we retained, modified, or rejected each line item in the SCR cost estimate for each of the five units at FCPP.

Comment: One of the owners of FCPP asserted that EPA's estimate of the average cost effectiveness of SCR at FCPP is significantly higher than the level ($1,600 per ton of NO_X removed) that EPA determined was not cost effective in the 2005 BART rules for presumptive BART limits. The commenter asserted that there is no basis for EPA to depart from its own rules by concluding that SCR is BART for FCPP when this technology is many times more expensive than the costs EPA rejected as presumptive BART in the 2005 BART rules. The commenter noted that its cost analysis estimated that the average cost effectiveness of combustion controls for the five units at FCPP would range from $524 to $1,735 per ton of NO_X removed, while the average cost effectiveness of SCR would range from $4,215 to $5,283 per ton. The commenter also noted that EPA's estimate of average cost effectiveness for SCR at FCPP ranged from $2,515 to $3,163 per ton. The commenter stated that, at the low end, only the estimate of the average cost effectiveness of combustion controls is in line with EPA's estimates of cost-effective controls for presumptive BART limits, while the estimate of average cost effectiveness of SCR is significantly higher.

Response: EPA disagrees with this comment. Although the commenters argue that the BART guidelines established a threshold for cost effectiveness against which future BART determinations must be compared, the BART Guidelines did not establish a cost effectiveness threshold for all BART determinations. In developing the presumptive NO_X limits for BART in 2005, EPA did not set the cost effectiveness values estimated for combustion controls as the threshold for determining whether a given control technology was or was not cost effective. The BART Guidelines do not set a numerical definition for ''cost effective'', and the analysis of presumptive limits uses cost effectiveness as a means to broadly compare control technologies, not as threshold for rejecting controls for an individual unit or facility that exceed the average cost effectiveness of combustion controls.

Additionally, a comparison of the average cost effectiveness estimates in the 2005 BART guidelines against EPA's cost effectiveness estimates in 2010 for FCPP is not an ''apples to apples'' comparison. The technical support documentation for the 2005 BART guidelines indicate that cost effectiveness of controls was not determined based on site-specific cost estimates developed for each BART-eligible facility; rather, cost estimates for existing facilities were determined using assumptions for capital and annual costs per kilowatt (kW) [8] or kilowatt-hour (kW-hr), and then scaled according to boiler size at the existing facilities. The supporting information for the 2005 BART Guidelines estimated SCR costs [9] for FCPP Units 4 and 5 that are comparable to SCR cost estimates generated by the National Park Service (NPS) in 2009 using the *EPA Control Cost Manual.*[10] The same commenters have previously dismissed the NPS SCR cost estimates based on the *EPA Control Cost Manual* because it does not include site-specific costs.[11] In short, the commenter's recommendation to use generalized cost estimates from the 2005 BART Guidelines as a bright line threshold for comparison with site-specific 2010 cost estimates is inconsistent with its own criticisms of the *EPA Control Cost Manual.*

In determining that a different level of control than the presumptive limit was warranted as BART for FCPP, EPA evaluated the five statutory factors in our assessment for FCPP. This evaluation was detailed in the Technical Support Document for our proposed BART determination and included an analysis of cost effectiveness, energy and non-air quality impacts of controls, existing controls at the facility, the remaining useful life of the facility, and the visibility improvement reasonably anticipated to result from controls. Therefore, EPA has not improperly disregarded the BART guidelines in our analysis for FCPP.

Comment: A number of commenters stated that EPA's BART analysis for FCPP was inconsistent with its own regulations in that it failed to consider control costs as a function of visibility improvement. These commenters typically stated that EPA's BART determination for FCPP must consider the cost effectiveness of control technology options in terms of dollars per deciview-improved.

Response: The BART Guidelines require that cost effectiveness be calculated in terms of annualized dollars per ton of pollutant removed, or $/ton.[12] The commenters are correct in that the BART Guidelines list the $/deciview ratio as an additional cost effectiveness metric that can be employed along with $/ton for use in a BART evaluation. However, the use of this metric further implies that additional thresholds or notions of acceptability, separate from the $/ton metric, would need to be developed for BART determinations. We have not used this metric for BART purposes at FCPP because (1) it is unnecessary in judging the cost effectiveness of BART, (2) it complicates the BART analysis, and (3) it is difficult to judge. In particular, the $/deciview metric has not been widely used and is not well-understood as a comparative tool. In our experience, $/deciview values tend to be very large because the metric is based on impacts at one Class I area on one day and does not take into account the number of affected Class I areas or the number of days of improvement that result from controlling emissions. In addition, the use of the $/deciview suggests a level of precision in the CALPUFF model that may not be warranted. As a result, the $/deciview can be misleading. We conclude that it is sufficient to analyze the cost

[6] See ''TSD Proposal—Technical Support Document 10–6–10'', Document No. EPA–R09–OAR–2010–0683–0002.

[7] See ''TSD ref [40] Four Corners SCR Cost Analysis (EPA) 8–26–10'', Document No. EPA–R09–OAR–2010–0683–0033.

[8] In the 2005 BART presumptive limit analysis, EPA estimated capital costs at all facilities nationwide assuming that SCR costs were $100/kW, and then scaling by the size of the facility (kW).

[9] The 2005 BART guidelines estimated SCR capital costs at FCPP to be $64 million and total annual costs to be $11 million. Cost effectiveness calculations rely on total annual costs and annual NO_X reductions from the control technology.

[10] In the ANPRM, in addition to reporting APS' cost estimates and EPA's revisions to APS' cost estimates, for reference, EPA also reported cost estimates developed by NPS using the *EPA Control Cost Manual* and provided to EPA during consultations with the FLMs prior to our ANPRM. NPS estimated SCR capital costs to be $53 million and total annual costs to be $10 million. See Table 9 in the October 2010 TSD for the proposed BART determination for FCPP. In its comments on the ANPR, NPS revised its cost estimates for SCR on Units 4 and 5 to $114 million (capital cost) and $18 million (total annual cost)—see Table 12 in the TSD for the proposed BART determination.

[11] APS and other entities provided comments to EPA on the NPS cost estimates reported in the ANPRM, see document titled ''Comments on ANPRM 09 0598 APS Comments and Exhibits'' document ID number EPA–R09–OAR–2009–0598–0195.

[12] 70 FR 39167.

effectiveness of potential BART controls for FCPP using $/ton, in conjunction with an assessment of the modeled visibility benefits of the BART control.

EPA considered cost of controls, including the total capital costs, annual costs, and $/ton of NO_X pollution reduced in our proposed BART determination. Additionally, in response to comments received on our proposal, EPA included calculations and consideration of incremental cost effectiveness (see Section 3.2 of the Response to Comments document in the docket for this final rulemaking). EPA considered visibility impacts, including the degree of impairment, the number of Class I areas affected by FCPP, the deciview improvement resulting from controls, and the percent change in improvement. EPA determined that these metrics are sufficient in completing our five-factor analysis for FCPP.

Comment: One commenter stated that BART must be determined in the context of reasonable progress rather than in isolation and that the cost effectiveness metric used by EPA (i.e., $/ton of NO_X reduced) does not satisfy the statutory requirement to consider the cost to comply with the Regional Haze program because it does not include compliance costs related to requirements for reasonable progress.

Response: Congress identified BART as a key measure for ensuring reasonable progress. We disagree that BART must be determined in the context of reasonable progress. If anything, reasonable progress depends on BART. Because the Class I areas affected by emissions from FCPP are not achieving the glidepath, it is important that states, tribes, and EPA require reasonable measures to be implemented to ensure that progress is made towards the national visibility goal.

The BART guidelines specify that the cost of controls be estimated by identifying the emission units being controlled, defining the design parameters for emission controls, and developing a cost estimate based on those design parameters using the *EPA Control Cost Manual* while taking into account any site-specific design or other conditions that affect the cost of a particular BART control option. The BART guidelines do not require the costs of compliance under BART to consider costs that may be associated with reasonable progress.

Comment: The Navajo Nation commented that EPA should analyze the affordability of controls under the supplemental proposal by performing a detailed analysis, rather than an approximation, of the cost of compliance for installing SCR on Units 4 and 5, including a consideration of the impacts of closing Units 1–3.

Response: EPA disagrees that we should perform a detailed cost analysis of the alternative emission control strategy put forth in the Supplemental Proposal. The Regional Haze Rule, in assessing an alternative measure in lieu of BART (40 CFR 51.308(e)(2)) requires several elements in the alternative plan (*e.g.,* a demonstration that the alternative will achieve greater reasonable progress than BART, and that reductions are surplus to the baseline date of the SIP), but does not require an analysis of the cost of the alternative plan.

Similarly, an affordability analysis of the alternative emission control strategy is not required under the Regional Haze Rule; however, at the request of the Navajo Nation, pursuant to EPA's customary practice of engaging in extensive and meaningful consultation with tribes, EPA commissioned a study to estimate potential adverse impacts to the Navajo Nation of APS's option to close Units 1–3 and will provide the report to the Navajo Nation by letter as a follow-up to our consultation.

2. Comments on Top-Down Analysis Versus Incremental Cost Effectiveness

Comment: A number of commenters note that EPA's proposed BART analysis was inconsistent with its own regulations in that it used a top-down analytic approach and failed to conduct an incremental cost evaluation. Commenters indicated that in using the top-down analysis, EPA failed to carry out the five-factor analysis for each of the technically feasible retrofit technologies as required by the BART Guidelines (citing 40 CFR part 51, Appendix Y, section I.F.2.c), including combustion control technology which the BART Guidelines identify as presumptive BART.

Response: EPA disagrees with these comments. In the preamble to the final BART guidelines, EPA discusses two options presented in the 2001 proposal and 2004 reproposal of the guidelines for evaluating ranked control technology options (See discussion at 70 FR 39130). Under the first option, States would use a sequential process for conducting the analysis, beginning with a complete evaluation of the most stringent control option. The process described is a top-down approach analogous to the analysis we used in our proposed BART determination for FCPP. If the analysis shows no outstanding issues regarding cost or energy and non-air quality environmental impacts, the analysis is concluded and the top level of technically feasible controls is identified as the ''best system of continuous emission reduction''. Therefore, in conducting our BART determination for FCPP, EPA's top-down approach for assessing the five factors was consistent with the discretion allowed under the BART guidelines. EPA additionally notes that the TSD for our proposed rulemaking included analyses of the costs, non-air impacts, and visibility improvements associated with combustion controls at FCPP, but that there is no requirement for a five-factor analysis on all potentially available control options if the top down approach is used and the top level of technically feasible controls is selected (70 FR 39130).

Comment: One of the owners of FCPP asserted that the BART rules require an incremental cost analysis and provided an analysis comparing the costs of combustion controls to the costs of SCR. According to the commenter's analysis, the incremental cost effectiveness of moving from combustion controls to SCR ranges from $6,553 to $8,605 per ton of NO_X reduced for the five units at FCPP. This commenter and another FCPP owner asserted that this ''extraordinarily high'' incremental cost highlights the fact that combustion controls, not SCR, satisfy the cost effectiveness test applied by EPA in adopting the presumptive BART limits in the BART rules.

Response: EPA agrees that the BART Guidelines recommend consideration of both average and incremental cost effectiveness, however, EPA disagrees with the commenter that the incremental cost effectiveness should be a comparison between combustion controls and SCR for this particular facility. As discussed at length in the TSD for our proposed BART determination for FCPP, Region 9 has determined that combustion controls (burner modifications and overfire air, including ROFA) will not be effective at significantly reducing emissions at Four Corners without potential operational difficulties due to inherent design and physical limitations of the boilers. Therefore, in estimating incremental cost, it is inappropriate and misleading to include combustion controls in the analysis for this particular facility. To respond to this comment, EPA conducted an incremental cost effectiveness analysis and included it in our docket for this final rulemaking.[13] Based on our incremental cost analysis, EPA has determined that the incremental cost of SCR compared to

[13] See ''Incremental cost.xlsx'' in the docket for this final rulemaking.

selective non-catalytic reduction (SNCR), the next most stringent option ($2,500 per ton to $3,300 per ton), is reasonable and does not support the commenter's conclusion that SCR is not BART for FCPP.

EPA estimated the total capital cost of BART for NO_X to be $718 million and total annual costs (annualized capital costs plus additional operating costs) to be $93 million per year. This final BART determination is expected to reduce emissions of NO_X by 80 percent, from 43,000 tons per year to 8,500 tons per year, resulting in a facility-wide average cost effectiveness of about $2,700 per ton of NO_X removed. EPA anticipates that this investment will reduce the visibility impairment caused by FCPP by an average of 57 percent at 16 Class I areas within 300 km of the facility. A detailed summary of the cost and visibility benefits were provided in the Technical Support Document for the proposed rulemaking. As discussed in our Supplemental Proposal, although APS did not provide a cost estimate for the BART Alternative and the RHR does not require an evaluation of costs associated with a BART Alternative, if APS chooses to implement the Alternative, EPA anticipates those costs to be approximately 39 percent lower than the cost of BART. The BART Alternative is expected to reduce emissions of NO_X by 87 percent, from 43,000 tons per year to 5,600 tons per year, resulting in a facility-wide average cost effectiveness of roughly $1,600 per ton of NO_X removed.[14] EPA anticipates that implementation of the BART Alternative will reduce visibility impairment caused by FCPP by an average of 72 percent at 16 Class I areas within 300 km of the facility.

B. Comments on Factor Two—Economic, Energy, and Non-Air Quality Environmental Impacts

We received a number of comments on the economic impacts and on the energy and non-air quality environmental impacts.

1. Comments on Economic Impacts

a. General Comments on Economic Impacts

Comment: Several commenters stated that EPA's analysis of historical and expected costs of electricity from FCPP neglect to include public health costs related to air pollution and the negative impacts to tourism resulting from loss of visibility. The commenters concluded that the cost effectiveness metric used to determine BART must account for health costs related to poor air quality.

Response: EPA disagrees with the comment that the cost effectiveness of BART must account for public health costs associated with poor air quality. Neither Section 169A of the CAA, nor the BART Guidelines, require the BART analysis to include or quantify benefits to health or tourism. Moreover, an analysis of health and tourism benefits is unlikely to alter the outcome of our BART determination, which already requires the most stringent control technology available for NO_X.

Comment: The Navajo Nation, one federal agency, and two of the owners of FCPP stated that EPA must consider the collateral adverse effects on the Navajo Nation and the surrounding communities of its BART determination. The commenters provided background on the substantial interest that the Navajo Nation has in the continued operation of FCPP. The commenters indicated that FCPP and its coal supplier, the Navajo Mine operated by BHP Billiton (BHP), together provide income to the Navajo Nation that contributes substantially to the Nation's economic viability and its sustainability as an independent sovereign nation. The commenters added that this resource extraction-based economy is the result of a conscious effort of the United States dating from the 1950s to develop the Nation's coal resources. According to the commenter, if FCPP and the Navajo Mine were to close as the result of the imposition of cost-prohibitive emission controls, the resulting revenue and job losses would be significant for the Navajo Nation.

Response: EPA agrees with commenters that the operation of FCPP and the Navajo Mine contribute significantly to the economy of the Navajo Nation and the Four Corners Region.

It is not EPA's intention to cause FCPP to shut down, nor is it within our regulatory authority under the Regional Haze Rule to require shutdown or redesign of the source as BART. As expressed in comments from the Navajo Nation to our Advanced Notice of Proposed Rulemaking,[15] EPA understands that the Navajo Nation's primary concern regarding the BART determination is the potential for FCPP closure. Therefore, as discussed in our proposed BART determination, EPA conducted an affordability analysis not typically included in a BART five-factor analysis in order to assess whether requiring SCR on all five units at FCPP would cause the power plant to close.

The model was designed to determine which future alternative results in lower power costs: (a) Power produced at FCPP after installation of SCR or, (b) replacing the power from FCPP with the appropriate amount of wholesale power purchases. As discussed in the TSD for our proposed BART determination, the model results suggested that even if the owners of FCPP installed and operated SCR on all five units, the facility could still produce power at a lower cost than the cost to purchase replacement wholesale power on the open market. Thus, EPA concluded in our proposed BART determination that requiring SCR as BART on all five units would not likely result in plant closure. No information was provided by the commenter to change this conclusion in the proposal.

Comment: The Navajo Nation asserted that EPA failed to consult with the Nation prior to publishing the supplemental proposal and failed in its trust responsibility to consider the economic impacts of closing Units 1–3. A federal agency commenter noted that EPA's current analysis focuses primarily on increased costs to rate payers and the companies' profitability, and stated that the analysis needs to incorporate the loss in revenue, jobs, and royalties resulting from the closure of Units 1–3 under the supplemental proposal.

Response: A timeline of correspondence and consultation with the Navajo Nation and other tribes for EPA actions on FCPP and Navajo Generating Station is included in the docket for the final rulemaking.[16] EPA notes that the Regional Administrator of EPA Region 9 called President Joe Shirley on February 9, 2011 to inform him of EPA's Supplemental Proposal. However, government-to-government consultation with the Navajo Nation on FCPP did not occur until May 19, 2011, with additional consultation occurring on June 13, 2012, prior to issuing our final rulemaking. The Navajo Nation raised concerns about the potential adverse impacts of the BART Alternative and requested that EPA conduct an analysis to estimate those impacts.

Although the Regional Haze Rule does not require a cost analysis of a BART alternative, at the request of the Navajo Nation, as part of EPA's customary

[14] EPA estimates facility-wide average cost effectiveness of the BART Alternative to be lower than BART because under the BART Alternative, Units 1–3 can be closed instead of retrofitted with new air pollution controls. On a per unit basis, the cost effectiveness of Units 4 and 5 is not expected to differ between BART or the BART Alternative.

[15] Comment letter from President Joe Shirley, Jr. dated March 1, 2010 in the docket for the ANPR: EPA–R09–OAR–2009–0583–0209.

[16] See document titled: ''Timeline of all tribal consultations on BART.docx'' in the docket for this final rulemaking.

practice of engaging in extensive and meaningful consultation with tribes and tribal authorities with regard to relevant Agency actions, EPA did commission an analysis to estimate potential adverse impacts on the Navajo Nation, with respect to coal- and power plant-related revenues, of the optional BART Alternative to retire Units 1–3. The report will be provided to President Shelly by letter as a follow-up to our consultation with the Navajo Nation.

Comment: One owner of FCPP stated that EPA's proposal to require SCR at FCPP presents significant challenges and risks with regard to its resource planning. The commenter pointed out that implementation of the BART proposal would require the commenter to make a significant capital investment in FCPP, which could only be recovered through long-term operation of the plant. According to the commenter, this would have the effect of locking FCPP into the commenter's generation portfolio for a considerable period or risk stranding those investments.

Response: EPA appreciates the perspectives shared in this comment, but we disagree that our five-factor BART analysis should consider the potential loss of an owner's flexibility to respond to possible future economic or regulatory scenarios. EPA cannot give substantial consideration in our BART analysis to external factors that are of uncertain magnitude and that may or may not occur. EPA further notes that the RHR allows for the development of BART alternatives that achieve greater reasonable progress than BART and EPA appreciates the fact that the owners of FCPP put forth an alternative that gives them more flexibility and results in greater emission reductions at FCPP.

b. Comments on EPA's Economic Analysis

Comment: One public interest advocacy group concurred with the EPA's analysis that the potential increase to APS rate payers as a result of SCR is expected to be less than 5 percent, as described in the TSD. The commenter stated that EPA's estimates are reasonable and that the average increase in the cost of generation at FCPP as a result of SCR implementation would be 22 percent, or $0.0074 per kWh, as stated in the TSD.

One of the owners of FCPP stated that installation of BART controls would increase its average residential customer monthly bills by $5.10 (3.8 percent) and larger industrial customer monthly bills by $17,400 (6.4 percent). The commenter also indicated that installing SCR and baghouses on Units 1–3 would increase the cost of electricity production on a $/MWh basis by more than 50 percent which, in conjunction with other market and regulatory uncertainties, may make the units uneconomical. The commenter also raised concerns related to the economic viability of Units 4 and 5 if SCR were installed on those units.

Another of the owners of FCPP, who also owns part of San Juan Generating Station and Navajo Generating Station, indicated that if SCR was required on all three power plants, its customers would face a rate increase of 4 to 6 percent, which would be significant because the local economy is fragile and has endured an 8 percent rate increase (not adjusted for inflation) since 1992.

Response: EPA agrees with the first commenter that based upon our analysis the potential increase to APS rate payers as a result of SCR is expected to be less than 5 percent. EPA cannot assess the estimated residential and industrial rate increase claimed by the second and third commenters with our economic analysis because the commenters did not provide information for us to evaluate their conclusions. However, EPA notes that the installation of baghouses on Units 1–3 is no longer relevant because EPA has determined that it is not necessary or appropriate at this time to set new PM limits for Units 1–3. This is because the Mercury and Air Toxics Standard (MATS) rule, which sets a filterable PM limit of 0.03 lb/MMBtu, is now final [17] and EPA is finalizing in this rulemaking the option to allow APS to comply with either BART or the BART alternative, which involves closure of Units 1–3.

Comment: One of the owners of FCPP expressed concern that EPA's analysis focuses on the effects on APS and Southern California Edison ratepayers, and not on the other owners of FCPP. This commenter's specific concerns include that the use of a ''return on rate''-based methodology would not apply to organizations of the commenter's type (a publicly owned utility) because it is not an investor-owned utility. In addition, the commenter stated that the EPA analysis did not attempt to determine the impact of different assumptions, such as an uncertainty with the future price of coal, on the conclusions of the analysis. Specifically, the ''small difference'' that EPA estimates between FCPP with SCR installed and the cost of purchasing power to replace FCPP generation suggests that a small change in an underlying assumption (return on rate, coal price, carbon pricing, etc.) could result in model results that show SCR to be a higher cost option than purchasing power. The commenter also raised the concern that EPA's analysis did not examine different ''payback periods,'' but instead relied on a payback period of 25 years, which may be inappropriate because the useful life of the plant is far from certain. The commenter said that EPA should recognize that there is a real risk that one or more owners may decide not to invest in SCR, which would force the shutdown of FCPP unless another owner could be found in a timely manner. The commenter also said that shutdown of FCPP would have significant adverse consequences on the Navajo Nation.

Response: The commenter is correct that EPA calculated rate impacts for only two of the four investor-owned utilities that own FCPP and excluded others, including an owner that operates as a publicly owned utility. The analysis estimating the increase in electricity generation costs is applicable to all owners of FCPP, but the rate impact analysis provided in the model was not intended to capture the rate impacts of all owners. APS and Southern California Edison (SCE) were selected because their combined ownership shares account for nearly 75 percent of the plant's output. In addition to our expectation that the utilities with the largest ownership share in FCPP would generally experience greater ratepayer impacts from capital expenditure projects like SCR installation, we also assumed that ratepayers of investor-owned utilities would likely experience larger impacts than public power customers due to the fundamental difference between their respective approaches to setting rates. Specifically, rates for public power utilities, in contrast to investor-owned utilities, do not include recovery for a margin above cost allowed as part of a regulated rate of return. Thus, all other variables being equal, one would expect the same capital investment to result in a larger rate impact for customers of investor-owned utilities than for customers of public power entities. Therefore, EPA continues to believe that our analysis of ratepayer impacts for only APS and SCE are appropriately conservative to demonstrate worst-case impacts to ratepayers of all six owners.

EPA agrees with the commenter that there are many company-specific factors and a wide range of assumptions that would affect a given owner's decision to make further substantial investments (such as SCR) at FCPP. Although many of those factors were outside the focus of the modeling because they were either unrelated to BART or were related to regulatory uncertainties in the

[17] See 77 FR 9304, February 16, 2012.

future, we included a qualitative discussion in Appendix B to the TSD regarding decision variables that EPA assumed each owner must consider before making capital expenditures. Additionally, EPA notes that the use of low, medium and high future projected prices for the Palo Verde Index in Appendix B to the TSD for the proposed rulemaking represents a sensitivity analysis for the market comparison.

With respect to the comment on the ''payback period'', the economic analysis for the proposed BART determination did not identify ''payback periods''. Rather, the commenter appears to be referring to the 25-year period used in the discounted cash flow model. EPA does not disagree with the commenter's stated concern that a shorter plant life, and thus shorter discounting periods, would yield different economic results. However, EPA disagrees with commenters that a shorter useful life should be considered in the economic analysis because there is no enforceable obligation on APS to cease operations on a given (earlier) date.

2. Comments on Energy and Non-Air Quality Environmental Impacts

Comment: One private citizen stated that no consideration was given to the effect of removing FCPP generation from the grid. According to the commenter, the events of February 2, 2011, show there are times when gas-fired generation cannot replace coal-fired generation because there is not enough gas transportation capacity.

Response: EPA disagrees with the commenter that we should consider the effect of removing FCPP generation from the grid. As stated elsewhere, it is not EPA's intention, nor is it within our regulatory authority, to require closure or require a redefinition of the source, in order to comply with the BART requirement of the Regional Haze Rule. Furthermore, the owners of FCPP did not provide evidence that the installation of SCR would cause FCPP to close.

EPA also notes that APS proposed to purchase the shares of Units 4 and 5 currently owned by Southern California Edison in order to close Units 1–3 (of which APS is sole owner) and install SCR on Units 4 and 5 as an alternative to BART. APS has received approval from the Arizona Corporation Commission and the California Public Utilities Commission to purchase Southern California Edison's share of Units 4 and 5. APS is also seeking approval from the Federal Energy Regulatory Commission to implement its proposal.[18] Decisions on investing in pollution controls or shutting down units are made by the owners in conjunction with their oversight boards or public utility commissions. These oversight bodies are also responsible for assuring the adequacy of electrical generating capacity, whether from coal, gas or nuclear fuels or renewable sources.

Comment: Thirty-seven private citizens commented that FCPP causes significant threats to public health due to its effects on air quality. In addition, a number of environmental and public interest advocacy groups provided comments on health and ecosystem impacts of the pollutants emitted by FCPP.

Regarding health impacts, the commenter noted that the same pollutants that contribute to visibility impairment also harm public health—the fine particulates that cause regional haze can cause decreased lung function, aggravate asthma, and result in premature death in people with heart or lung disease. The commenter added that NO_X and volatile organic compounds (VOCs) can also be precursors to ground-level ozone, which is associated with respiratory diseases, asthma attacks, and decreased lung function. According to the commenter, ozone concentrations in parks in the Four Corners region approach the current health standards, and likely violate anticipated lower standards.

The same commenter also contended that consideration of non-air quality impacts extends to impacts on wildlife and habitat as well as natural and cultural heritage. According to the commenter, haze-causing emissions also harm terrestrial and aquatic plants and animals, soil health, and water bodies by contributing to acid rain, ozone formation, and nitrogen deposition.

With these health and environmental considerations in mind, in addition to visibility and economic considerations discussed in other sections of this document, the commenter urged the EPA to finalize more stringent BART determinations for FCPP.

The commenter noted that FCPP is a significant source of mercury emissions and provided information on the health and ecosystem effects of mercury, as well as on the deposition of mercury and the levels of mercury found in the Four Corners area. In addition, the commenter stated that FCPP emits more than 16 million tons per year (tpy) of CO_2, and that such emissions contribute significantly to climate change which is likely to result in increasing temperatures and increase drought in the Southwest. The commenter noted that the supplemental proposal would reduce emissions of both mercury and CO_2.

One environmental advocacy group stated that a formal Health Impact Assessment should be conducted by independent experts before EPA's final decision to answer such questions as whether shutting down Units 1–3 is sufficient to protect local health, and what health impacts would result from delaying pollution controls on Units 4 and 5 until 2018.

Response: EPA agrees that there are potential benefits to health and the environment from reducing emissions of NO_X. However, quantifying health benefits is not within the scope of the BART five factor analysis required under the CAA (§ 169A(g)). The BART Guidelines provide additional information on how to analyze ''non-air quality environmental impacts, and focuses on adverse environmental impacts associated with control technologies, i.e., generation of solid or hazardous wastes and discharges of polluted water, that have the potential to affect the selection or elimination of a control alternative'' (see 70 FR 39169). Thus, although the BART Guidelines do state that relative environmental impacts (both positive and negative) of alternatives can be compared with each other, they state that ''if you propose to adopt the most stringent alternative, then it is not necessary to perform this analysis of environmental impacts for the entire list of technologies''. EPA agrees with commenters that controlling pollutant emissions may have co-benefits for reducing ozone production and acid deposition. EPA does not interpret the BART Guidelines to require quantification of human health or environmental co-benefits in determining BART, particularly if the most stringent BART option is finalized. Similarly, EPA does not interpret the BART guidelines to require human health or environmental assessments of alternative compliance strategies as long as we have determined that the alternative strategy achieves better progress towards the national visibility goal.

Comment: The commenter stated that human exposure to environmental hazards is an important factor in assessing impacts of FCPP. The commenter encouraged EPA to pursue health studies in collaboration with the Navajo Nation to study local risks

[18] On March 22, 2012, the California Public Utilities Commission (PUC) approved the sale of SCE's ownership share in FCPP to APS. On April 18, 2012, the Arizona Corporation Commission voted to allow APS to purchase SCE's ownership share in FCPP.

associated with exposure to criteria pollutants, indoor air pollutants, and other contributing air pollutants, from which improved public health and effective rulemakings under the CAA may be achieved.

Response: Assessing human exposure and quantifying health benefits are outside the scope of the requirements of the Regional Haze Rule. EPA sets National Ambient Air Quality Standards (NAAQS) to establish levels of air quality that are protective of public health, including the health of sensitive populations, for a number of pollutants including particulate matter. These ''sensitive'' populations include asthmatics, children, and the elderly. At this time the Navajo Nation is not identified as out of attainment with any of the NAAQS. However, EPA recognizes that there are significant concerns about risk and exposure to air pollutants on the Navajo Nation and EPA will continue discussions with the Navajo Nation and will involve other federal agencies, as appropriate, to help address these concerns.

C. Comments on Factor Three—Existing Controls at FCPP

Comment: One of the owners of FCPP agreed with EPA's summary of the existing controls at the plant, but noted that the proposed FIP is only the most recent action in a long line of regulatory and voluntary efforts to reduce emissions of pollutants that impact visibility, including SO_2, NO_X, and PM emissions. The commenter asserted that FCPP has a strong history of retrofitting pollution controls and recounted the facility's history of installing these controls and reducing emissions.

Response: EPA agrees that there have been numerous installations of pollution controls over the several decades that FCPP has been in operation. The most recent voluntary effort by FCPP increased the SO_2 removal from its long-term level of 72 percent removal to 88 percent removal. This was accomplished before the end of 2004 and became effective as a regulatory requirement in June 2007. The improvement in SO_2 removal has resulted in a decrease of over 22,000 tons of SO_2 per year since that time.

D. Comments on Factor Four—Remaining Useful Life at FCPP

Comment: One of the owners of FCPP noted that the BART rules state that the normal amortization period (20 years for NO_X control devices) is appropriate to use as the remaining useful life if the plant's ''remaining useful life will clearly exceed'' that amortization period (citing 70 FR 39169). The commenter asserted, however, that as a result of substantial uncertainty related to multiple factors, it is not at all clear that the plant's remaining useful life is at least 20 years.

Moreover, according to the commenter, one factor that should not be allowed to shorten the useful life under the BART rules is the choice of BART itself—EPA cannot use a 20-year amortization period to justify a specified technology (*e.g.,* SCR) if the application of the technology would be so costly as to make the facility uneconomical and shorten its useful life (citing 70 FR 39164, 39171).

The commenter made a number of arguments related to the possibility of a shorter useful life at FCPP that are briefly summarized here. The excessive cost of SCR will dramatically increase the energy costs of the plant, potentially making it uneconomical. The proposed ''phase-in schedule'' for SCR may force closure of units because APS will not have certainty by the compliance deadline that the lease will be extended or that Southern California Edison's ownership share will have been successfully transitioned. Emerging environmental laws and regulations present cost and operational uncertainty that may shorten FCPP's useful life (including new GHG laws and regulations, MATS, new ash-handling requirements, and new requirements for cooling water intake structures).

Response: EPA disagrees that we must consider a shorter useful life because of uncertainty related to the factors cited by the commenter. It is inappropriate to consider a useful life shorter than 20 years based solely on uncertainty or the possibility of shut down. EPA further notes that in its cost analysis on behalf of APS, B&V stated ''the remaining useful life of Units 1 through 5 was at least 20 years''.[19] Unless there is an enforceable obligation for APS to cease operations or unless APS convincingly demonstrates that controls (rather than uncertainty associated with future requirements) will cause facility closure, the default 20 year amortization period represents the appropriate period for the remaining useful life.

EPA agrees that our proposed ''phase-in'' schedule for installation of add-on post-combustion NO_X controls on Unit 1–3 for BART, which was added in the supplemental proposal, may have allowed less than two years for engineering and installation from the date by which APS intends to make its decision on continuing operation or shutting the units down by 2014. EPA is finalizing a modified schedule for the installation of add-on post combustion controls from what was originally proposed (phased-in installation of controls within three to five years of effective date) by requiring one of the 750 MW units to comply with the BART emission limit within 4 years of the effective date of this final rule and the remaining units (Units 1–3 and either Unit 4 or 5) within 5 years of the effective date of this final rule.

Comment: One industry commenter stated that EPA, rather than evaluate APS' supplemental proposal as an alternative emission control strategy, should instead ''re-determine'' BART for each of the five units at FCPP based on the APS-proposed shutdown scenario for Units 1–3, i.e., reducing the remaining useful life of Units 1–3 to 2014 and then using the short remaining life of those units to determine that BART for Units 1–3 is no additional control. The commenter concluded that a ''better-than-BART'' control strategy does not seem to be necessary for determining the appropriate requirements for FCPP under the APS-proposed shutdown scenario; instead, a BART determination for each unit with appropriate weighting of the statutory factors appears to present a logical and less-burdensome means of applying section 169A(b)(2) of the CAA to FCPP.

Response: EPA disagrees that APS' supplemental proposal should be evaluated in terms of a BART re-determination rather than in terms of its current status as a ''better-than-BART'' alternative measure. The 2006 Regional Haze Rule (71 FR 60612) established the procedures described in 40 CFR 51.308(e)(2) and (3) for scenarios involving programs that may make greater reasonable progress than source-by-source BART. These provisions were specifically included to allow for the flexibility to consider alternative measures such as the one proposed by APS, and EPA considers it the most appropriate method for evaluating APS' supplemental proposal.

Comment: One industry commenter discussed the ''remaining useful life'' statutory factor, noting that under the BART Guidelines remaining useful life is ignored in the majority of BART determinations (citing 40 CFR part 51, Appendix Y, section IV.D.4.k), which the commenter asserted is inappropriate. According to the commenter, Congress designated the remaining useful life of the source as an important consideration because it did not want to impose the burdens of control technology retrofits on sources

[19] See B&V Engineering Analysis for Units 1–5 at FCPP dated December 2007. Document number 0011 in docket for proposed rulemaking: EPA–R09–OAR–2010–0683.

that were more than 15 years old at the time the statute was enacted. Given that it is now 34 years after the BART requirements were enacted, the commenter stated that the ''remaining useful life'' statutory factor should weigh heavily in BART determinations for older sources such as FCPP, instead of being ignored.

Response: EPA disagrees with the commenter that we ignored the ''remaining useful life'' statutory factor in our BART decision. EPA considered this factor in our BART analysis (see pages 42–43 of the TSD for our proposed BART determination). As discussed in the TSD, the remaining useful life of an Electric Generating Unit (EGU) subject to BART is determined by the utility. EPA cannot arbitrarily decide that an EGU has less useful life when it is not within our BART rulemaking authority to require closure of an EGU. If a utility used a shorter useful life than one that would allow the full amortization of any necessary pollution controls, EPA would take that into account in the cost analysis, provided that there was an enforceable obligation for the facility to cease operation by that time.

E. Comments on Factor Five—Anticipated Visibility Improvements

Comment: One of the owners of FCPP presented information on visibility conditions on the Colorado Plateau and the role of NO_X emissions in Western visibility impairment. The commenter noted that SO_2 and NO_X emissions have been decreasing in recent years. The commenter also presented information that purported to show that whether averaged over the haziest 20 percent of days, the clearest 20 percent of days, or all days, power plant NO_X emissions contribute less than 1.5 percent to the light extinction at Mesa Verde National Park.

Another commenter questioned EPA's assertion that NO_X and PM from FCPP are significant contributors to visibility impairment in the numerous mandatory Class I areas surrounding FCPP (citing 75 FR 64221), stating that coal-fired power plants, including FCPP, are relatively small contributors to regional haze in the surrounding Class I Areas.

Response: EPA modeling of FCPP showed visibility impacts ranging from 1.2 to 6.0 deciviews (dv), depending on the Class I area, with the sum of impacts at all sixteen Class I areas totaling 43 dv. This is a significant contribution to visibility impairment. Even if an individual source category appears small to some commenters, the many segments of the emissions inventory together cause significant visibility impairment and must be addressed in order to make progress towards the national goal of remedying visibility impairment from manmade pollution. Section 169A of the CAA requires BART determinations on BART-eligible EGUs regardless of trends or ambient visibility conditions. Application of BART is one means by which we can ensure that downward emission and visibility impairment trends continue. EPA identifies stationary sources as an important category to evaluate in a BART analysis.

Comment: Three of the owners of FCPP, the Navajo Nation, and two utility industry associations argued that EPA's use of Interagency Workgroup on Air Quality Modeling (IWAQM) Phase II default background ammonia values is not appropriate. They argued the following points: (1) Actual field measurements show lower ammonia concentrations than used by EPA; (2) EPA is mistaken in its assumption that background ammonia concentrations along the path of the plant's plume determine nitrate concentrations and their contribution to haze at the receptor site; (3) EPA's ''corroborating'' approach of ''back-calculating'' ammonia is flawed because it erroneously assumes that the ammonia associated with measured sulfate and nitrate would all be available to react with FCPP emissions, whereas in reality those measurements reflect emissions from many sources; (4) EPA's analysis of nitrate predictions as a check on the ammonia values used is also flawed because it erroneously assumes that the resulting measured nitrate levels are solely due to FCPP emissions; (5) comparable analysis using the EPA ammonia value shows substantial and ''physically impossible'' over-predictions of nitrate. The commenters conclude that the use of IWAQM values invalidates EPA's BART modeling and the BART determination that relied on the modeling.

Another utility industry association stated that several measurement programs on the Colorado Plateau show that actual ammonia values in Class I areas near FCPP are significantly lower than the IWAQM default value, indicating that these values typically range from 0.1 to 0.6 ppb. The commenter noted that ammonia concentrations are lowest during the cold season when the visibility impacts of NO_X emissions are the highest. Accordingly, the commenter asserted that using a single ammonia value throughout the year is not scientifically valid and should be replaced with seasonally variable values.

The Navajo Nation expressed concern regarding discrepancies between EPA and APS modeling inputs, given the commenter's understanding that APS obtained advance EPA approval for its modeling protocols. Some commenters stated that EPA had earlier agreed to lower ammonia concentrations, and so should not be using the higher IWAQM value now.

In contrast, one public interest advocacy group concurred with EPA's back-calculation method for ammonia background levels (citing the TSD, page 60). The commenter added that the requests to EPA from other commenters for additional ammonia monitoring data are unrealistic in today's budget environment.

Response: EPA disagrees with commenter objections to the background ammonia concentrations used in our modeling. Our use of the 1 ppb IWAQM Phase II default background ammonia value is appropriate. Most of the objections have already been discussed in EPA's TSD for the proposal; and several of them concern the ''back-calculation'' method that we used only as corroboration for using the 1 ppb results we principally relied on. Also, even if the lower ammonia concentrations urged by some commenters were accepted, EPA's sensitivity modeling results provided in the TSD for our proposed BART determination showed the visibility benefits would still support EPA's BART determination. EPA also provided the results of modeling runs that used the lower ammonia background concentrations recommended by some commenters (see TSD Table 37). The visibility benefits of the NO_X controls for BART are substantial under all ammonia scenarios, including the lower background ammonia concentrations recommended by commenters. For 12 Class I areas, modeling even with those lower background concentrations showed improvements of 0.5 dv or more, an amount recognized in the BART Guidelines as significant (*e.g.* at 70 FR 39120).

The lack of ammonia and ammonium measurements in the Class I areas of concern requires that EPA estimate background ammonia concentrations by some method, considering available data and approaches. As discussed in the BART proposal and its accompanying TSD, EPA understands that there is no single accepted method for estimating the background concentration of ammonia, and that any method will have advantages and disadvantages. The lack of consensus on a method was a factor in EPA's decision to rely on the 1 part per billion (ppb)

default value in IWAQM, as was the fact that IWAQM is the only available guidance on this issue. In summary, there is insufficient monitoring information available to use a different value, or to support any seasonally varying values and, as described below, these values are reasonable to use in this analysis.

On the first issue, field measurements cited by the commenters were not performed in the Four Corners area, nor at the Class I areas near FCPP, so they do not give appropriate ammonia background concentrations for modeling of FCPP. In addition, the studies provide only gaseous ammonia (NH_3) and not ammonium (NH_4) that has reacted with SO_2 or NO_X emissions. For purposes of assessing FCPP impacts relative to natural background, per the BART Guidelines, both ammonia and ammonium should be assumed to be available to interact with emissions from FCPP. The ammonia-only measurements cited by the commenters underestimate the available ammonia. Finally, as discussed in the TSD, field measurements in the Four Corners area showed ammonia measurements ranging from 1.0 ppb to 1.5 ppb, and sometimes as high as 3.5 ppb.[20] This provides some additional support for the 1 ppb used by EPA.

On the second issue, in using a 1 ppb background EPA did not rely on an assumption about the importance of background ammonia along the path of the plume, as claimed by the commenters. The 1 ppb background is a representative value for areas in the west under existing EPA guidance, in the IWAQM document. The commenters' objection is based on the rapidity of the nitrate-nitric acid equilibrium, which they state implies that ammonium nitrate can only be estimated using ammonia measurements right at the Class I area, and not the ammonia that occurs earlier along the plume's path to the area. EPA's TSD for the proposed rulemaking did state (TSD p.62) that the Federal Land Managers partly relied on this assumption as one of the rationales for the back-calculation method, discussed below; EPA also expressed support for the idea that the method can be viewed as a 24-hour temporal integration, not just a spatial integration over the plume path, and that this aspect can be viewed as desirable for the 24-hour average visibility estimate that CALPUFF provides (TSD pp.71–72). This plausibility argument applies despite the rapid nitrate-nitric acid equilibrium cited by the commenters, and in any case was not relied on by EPA in using the 1 ppb default ammonia background.

As the commenters stated under the third issue, EPA used a back-calculation ammonia estimation method as an alternative means of corroboration for the 1 ppb IWAQM method, which is more fully explained in the TSD for the proposed rulemaking. Essentially, it uses measured particulate ammonium sulfate and nitrate to estimate the amount of ammonia that must have been present to form those ammonia compounds. The commenters object that the method assumes that all the calculated ammonia is available to interact with the FCPP plume as background ammonia. However, this assumption is reasonable for the single-source CALPUFF modeling performed under the BART Guidelines. It estimates ammonia concentrations that would be monitored at the Class I area if only this single source existed; it includes ammonia that is currently in the form of ammonium because of interaction with other sources' emissions. It remains true that some portion of the calculated ammonia would in reality not be available for FCPP, because it arrives at the monitor from a different direction than FCPP's pollutant plume; on the other hand, the data would also include directions contributing below-average ammonia, reducing that effect.

In addition, the back-calculated ammonia is based on measurements only of particulate ammonium, the form associated with measured sulfate and nitrate; it does not include any gaseous ammonia that may also be present. In this sense, the back-calculated ammonia is a lower bound on the ammonia that may be available to interact with source emissions; that is, the method may underestimate ammonia concentrations. This possible underestimation tends to offset possible overestimation discussed above.

EPA does not claim that the back-calculation method is dispositive; it incorporates various assumptions and imperfections that make clear it is only an estimate. However, it is based on real measured data at Class I areas, and has some counterbalancing tendencies for over- and under-estimation. After weighing various lines of argument about the back-calculation method, EPA disagrees with the commenters who recommended that it be rejected altogether. The method provides a useful estimate of ammonia for BART modeling, by providing concentrations representative of the high values that would be observed at the Class I areas in the absence of other sources. The back-calculation method, therefore, is used to corroborate that it is appropriate to use the 1 ppb IWAQM default for background ammonia concentrations.

In the fourth issue raised by commenters, the commenters claim that the assumption of full availability to FCPP of the back-calculated ammonia invalidates EPA's comparison of monitored nitrate levels with those modeled using the back-calculated ammonia (TSD p.73). As just discussed for the third issue, EPA disagrees that the assumption is invalid for corroboration of single-source BART assessment modeling. For single-source BART modeling, on balance, it is reasonable to assume all the ammonia is available to the source, given the counterbalancing tendencies for over- and underestimation inherent in the back-calculation method discussed above. In any case, this method mainly provided corroboration for the results from using the 1 ppb ammonia default.

The fifth issue about ''physically impossible'' nitrate over-predictions does not account for the fact that any model evaluation is expected to have under- and over-predictions, depending on the meteorological conditions and the geographic location modeled, as well as on the location of the monitor used for comparison. The commenter's apparent requirement for no over-predictions whatsoever would require a model with the converse problem, a bias toward underprediction. While consistent over-prediction in a full model performance evaluation would indeed raise concerns over its validity, as EPA stated, our nitrate comparison was not intended as a model performance evaluation, but rather as a ''rough check'' for the back-calculation corroboratory method (TSD p.73). EPA found that the modeled and monitored values, for both the maximum values and the 98th percentiles, were generally in agreement.

Finally, contrary to the commenter's assertion, EPA did not receive a modeling protocol in advance of modeling by APS's contractor. EPA disagrees with commenters that EPA committed to use the same ammonia concentrations used by APS's contractor in our own modeling analysis for our BART determination.

Comment: Three of the owners of FCPP and a utility industry association asserted that CALPUFF version 5.8 used in EPA's BART analysis is outdated. Because of enhancements to the model's chemistry, the commenters asserted that CALPUFF version 6.4 represents the best application that is currently available. A number of the commenters

[20] Mark E. Sather *et al.,* 2008. ''Baseline ambient gaseous ammonia concentrations in the Four Corners area and eastern Oklahoma, USA''. *Journal of Environmental Monitoring,* 2008, 10, 1319–1325, DOI: 10.1039/b807984f.

mentioned a December 2010 meeting between the CALPUFF developer and the FLMs where the FLMs reportedly supported an expedited review and approval of CALPUFF version 6.4.

Another owner of FCPP stated that the version of CALPUFF used by EPA has a tendency to over-predict nitrate concentrations, which is compounded by EPA's use of what the commenter stated are overestimated ammonia background values. The commenter asserted that this combination of errors results in a significant over-prediction of visibility improvements for more stringent NO_X BART control options. Further, the commenter stated that this disproportionately affects the incremental visibility benefits predicted for SCR over Low NO_X Burners (LNB) compared to LNB over baseline.

In contrast, one federal agency was generally supportive of the modeling methods employed by EPA with the regulatory approved version 5.8 of the CALPUFF modeling system.

Response: EPA disagrees with the commenters that any new CALPUFF version should be used for the BART determination. EPA relied on version 5.8 of CALPUFF because it is the EPA-approved version in accordance with the Guideline on Air Quality Models (''GAQM'', 40 CFR 51, Appendix W, section 6.2.1.e); EPA updated the specific version to be used for regulatory purposes on June 29, 2007, including minor revisions as of that date; the approved CALPUFF modeling system includes CALPUFF version 5.8, level 070623, and CALMET version 5.8 level 070623. CALPUFF version 5.8 has been thoroughly tested and evaluated, and has been shown to perform consistent with the version from the time of the initial 2003 promulgation, in the analytical situations CALPUFF has been approved for. Any other version would be considered an ''alternative model'', subject to the provisions of GAQM section 3.2.2(b), requiring full model documentation, peer-review, and performance evaluation. No such information for the later CALPUFF versions that meet the requirements of section 3.2.2(b) has been submitted to or approved by EPA. Experience has shown that when the full evaluation procedure is not followed, errors that are not immediately apparent can be introduced along with new model features. For example, changes introduced to CALMET to improve simulation of over-water convective mixing heights caused their periodic collapse to zero, even over land, so that CALPUFF concentration estimates were no longer reliable.

In addition, the latest version of CALPUFF, 6.4, incorporates a detailed treatment of chemistry. EPA's promulgation of CALPUFF (68 FR 18440, April 15, 2003) as a ''preferred'' model approved it for use in analyses of Prevention of Significant Deterioration increment consumption and for complex wind situations, neither of which involve chemical transformations. For visibility impact analyses, which do involve chemical transformations, CALPUFF is considered a ''screening'' model, rather than a ''preferred'' model; this ''screening'' status is also described in the preamble to the BART Guidelines (at 70 FR 39123, July 6, 2005). The change to CALPUFF 6.4 is not a simple model update to address bug fixes, but a significant change in the model science that requires its own rulemaking with public notice and comment.

Furthermore, it should be noted that the U.S. Forest Service and EPA review of CALPUFF version 6.4 results for a limited set of BART applications showed that differences in its results from those of version 5.8 are driven by two input assumptions and not associated with the chemistry changes in 6.4. Use of the so-called ''full'' ammonia limiting method and finer horizontal grid resolution are the primary drivers in the predicted differences in modeled visibility impacts between the model versions. These input assumptions have been previously reviewed by EPA and the FLMs and have been rejected based on lack of documentation, inadequate peer review, and lack of technical justification and validation.

EPA intends to conduct a comprehensive evaluation of the latest CALPUFF version along with other ''chemistry'' air quality models in consultation with the Federal Land Managers, including a full statistical performance evaluation, verification of its scientific basis, determination of whether the underlying science has been incorporated into the modeling system correctly, and evaluation of the effect on the regulatory framework for its use, including in New Source Review permitting. CALPUFF version 5.8 has already gone through this comprehensive evaluation process and remains the EPA-approved version, and is thus the appropriate version for EPA's BART determination for FCPP.

Comment: Some commenters argued against the visibility metrics that EPA introduced in the BART proposal. One commenter noted that none of the metrics (percent improvement in dv impacts, cumulative changes in dv, and dv impacts scaled by the geographic area of the affected Class I area) is addressed in the BART rules, and posited that their introduction into the BART process is intended to inflate the estimated visibility benefits of the control options at FCPP. Regarding the percent improvement metric, the commenter stated that these values (unlike values of the haze index in dv) have no consistent relationship to the human perception of haze changes and no consistent relationship to changes in ambient visibility-impairing particle concentrations.

Similarly, one of the owners of FCPP stated that cumulative change in dv is not an appropriate metric to describe visibility improvement and should be withdrawn. This commenter made a number of points which are briefly described here. The peak impact from a source occurs at different times in different Class I areas because a facility's emissions cannot result in peak concentrations in all directions at once. Thus, this metric really does not represent a cumulative regional impact of the source (and hence the benefit of controls); rather it simply produces a mathematical summation of the peak impacts occurring at different times at various Class I areas. It is inappropriate to add improvements over all Class I areas. A 0.5 dv improvement in one Class I area and a 0.5 dv improvement in another area does not result in a 1 dv improvement—the improvement is a 0.5 dv improvement, which occurs in two different locations. Any one observer would experience only a 0.5 dv improvement; he or she can only experience the visibility improvement in the Class I area being visited.

Conversely, one environmental advocacy group commenter supported the use of a cumulative impact analysis. The commenter asserted that the cumulative impact of a source's emissions on visibility, as well as the cumulative benefit of emission reductions, is a necessary consideration as part of the fifth step in the BART analysis, particularly in cases such as FCPP where the source causes or contributes to visibility impairment at a significant number of Class I areas. The commenter stated that failing to account for a source's cumulative impairment and the cumulative pollution control benefit would result in a failure to acknowledge the regional approach to reducing haze.

Response: EPA believes that it is important to consider the visibility impact on multiple Class I areas. The goal of the visibility program is to remedy visibility impairment at all Class I areas. CAA 169A(a)(1). One approach to account for the benefits to

all affected Class I areas is the cumulative ''total dv'' metric. EPA relied on the modeled impacts and benefits at each Class I area individually, the number of Class I areas affected, and also considered, but did not rely on, the sum of visibility impacts and benefits across all 16 Class I areas.

Comment: Two commenters questioned EPA's use of 0.5 dv as the threshold of a humanly perceptible change in visibility (citing 75 FR 64228). One commenter added that the establishment of a specific deciview threshold as a ''bright line'' to define whether a certain control will be imposed as BART is contrary to the intent of the BART rules and the objectives of the Regional Haze program, which require EPA to consider the cost of each control option in relation to the associated visibility benefit.

One of the owners of FCPP expressed the belief that application of SCR at FCPP would result in no perceptible visibility improvement and therefore cannot be BART.

Response: EPA disagrees with the commenters that the visibility benefit from the proposed BART controls is too small to warrant requiring the controls; in addition, EPA is not using a perceptibility threshold in this BART determination. EPA agrees that thresholds should not be considered a ''bright line'' in making BART decisions. In the BART Guidelines, EPA described 1 dv as the threshold for an impact that ''causes'' visibility impairment, and 0.5 dv as a threshold for an impact that ''contributes'' to visibility impairment, for determining whether a source is subject to BART, though States were accorded discretion to use different thresholds (70 FR 39118, July 6, 2005; also 39120–39121). These thresholds do not apply to BART determinations for sources that have been found subject to BART; States or EPA could consider visibility impacts less than 0.5 dv to warrant BART controls. To the extent that the comment is questioning the BART eligibility of FCPP, EPA has already established that FCPP is BART eligible and the commenter did not provide evidence to the contrary.

Even if the commenters are correct that 0.5 dv change is not perceptible, EPA noted that ''[e]ven though the visibility improvement from an individual source may not be perceptible, it should still be considered in setting BART because the contribution to haze may be significant relative to other source contributions in the Class I area. Thus, we disagree that the degree of improvement should be contingent upon perceptibility. Failing to consider less-than-perceptible contributions to visibility impairment would ignore the CAA's intent to have BART requirements apply to sources that contribute to, as well as cause, such impairment.'' (70 FR 39129) That is, impacts smaller than 0.5 dv do contribute to impairment. Conversely, an improvement of 0.5 dv or even less contributes to improvement in visibility impairment. As stated in the proposal, the modeled improvements in visibility are large enough to warrant requiring the proposed BART controls. While the actual improvements may be larger, from 0.6 to 2.8 dv, even as small an improvement as 0.5 dv is a contribution toward improving visibility, especially when the benefits at multiple Class I areas are considered. In conjunction with improvements from other sources, this will help and is necessary for progress toward the CAA goal of remedying manmade visibility impairment.

Comment: One environmental advocacy group commenter stated that EPA underestimated visibility improvement from installing NO_X controls because it overestimated the production of sulfuric acid by the SCR and underestimated the amount of sulfuric acid removed downstream of the SCR. The commenter cited reports attached to the comments to argue that sulfuric acid does not limit SCR NO_X control efficiency. The reports also state that modeling shows that greater NO_X removal rates are not offset by sulfuric acid emissions but instead yield greater visibility improvements than those proposed by EPA. The commenter states that this would result in a significant visibility benefit from increasing the SCR NO_X efficiency from 80 percent to 90 percent and therefore concludes that a higher level of NO_X control than 80 percent should be determined BART.

Response: EPA disagrees that we overstated the production of sulfuric acid from the SCR catalyst and underestimated the amount of sulfuric acid removed downstream of the SCR. In the TSD for our proposed BART determination, we estimated sulfuric acid emissions using the Electric Power Research Institute (EPRI) methodology and provided detailed explanations for all of the assumptions we applied (see TSD p. 55–59, 64–65, and 68). While we fully acknowledge and understand that the generalized EPRI methodology does not precisely represent true sulfuric acid emissions for a given facility, this method is a commonly used calculation methodology for estimating sulfuric acid emissions under a future operating scenario involving SCR.

EPA assumed in our BART proposal that a 3+1 system (four layers of catalyst) would achieve 80 percent NO_X removal. Greater reduction efficiencies would likely require an additional layer of catalyst, which models indicate would increase sulfuric acid emissions. Based on the SO_2 to SO_3 conversion rate guarantee we received from Hitachi for its CX series catalyst (ultra-low conversion) of 0.167 percent per layer, the use of an additional catalyst layer would equal five layers of catalyst and a 0.835 percent conversion rate. EPA is not aware of SCR systems that use five layers of catalyst, and the addition of a fifth layer would also affect the cost and operation of the unit.

Although EPA agrees that the modeling referenced by the commenter indicates greater visibility improvement from an SCR system achieving 90 percent removal compared to 80 percent removal despite higher sulfuric acid emissions,[21] EPA does not agree that this requires EPA to determine that a greater level of control is required as BART. The level of control recommended by the commenter is equivalent to those required as the Best Available Control Technology (BACT) for new facilities. As discussed in responses to other comments, the Regional Haze Rule requires a case-by-case BART determination, which need not be equivalent to BACT for new facilities. As discussed in our proposed BART determination and in our Supplemental proposal, given the boiler size and configuration at FCPP that limit use of combustion controls, and other considerations related to ash content of coal, EPA is finalizing its determination that 80 percent control is appropriate as BART for FCPP.

F. Comments on BART Determinations

1. Comments on the Proposed BART Determination for NO_X

Comment: A number of commenters, including owners of FCPP, the Navajo Nation, and a utility industry association, assert that EPA's BART analysis was inconsistent with its own regulations in that it did not give proper weight to the ''presumptive BART'' limits for NO_X that it established for EGUs through notice-and-comment rulemaking (generally citing 70 FR 39104, July 6, 2005). The commenters noted that these presumptive BART limits are based on the use of

[21] EPA notes that the baghouses on Units 4 and 5 are assumed to provide a significant amount of control of sulfuric acid emissions, therefore, such slight increases in sulfuric acid emissions would not be expected on units that are not equipped with baghouses.

combustion controls, and that EPA had considered and rejected establishing presumptive BART limits based on SCR. A brief summary of these comments follows.

In establishing presumptive BART limits for NO_X emissions from EGUs, EPA concluded that combustion control-based presumptive limits ''are extremely likely to be appropriate for all greater than 750 MW power plants subject to BART'' (a category that includes FCPP), that they are ''highly cost-effective controls,'' and that they ''would result in significant improvements in visibility and help to ensure reasonable progress toward the national visibility goal (citing 70 FR 39131). Additionally, EPA has made clear that ''the presumptions represent a reasonable estimate of a stringent case BART * * *'' (citing 71 FR 60612, 60619, Oct. 13, 2006).

Commenters argue that EPA was not correct in stating in the proposed BART determination for FCPP that in setting presumptive BART limits, it ''did not consider the question of what more stringent control technologies might be appropriately determined to be BART'' (citing 75 FR 64226). Rather, EPA's 2005 rules were clear that the Agency had considered—and rejected—establishing presumptive BART limits based on SCR (citing 70 FR 39136). Thus, EPA established through rulemaking that SCR is not an appropriate basis for presumptive BART limits and that combustion controls should generally be deemed BART.

Commenters also argue that a BART analysis must begin with and take into account the presumptive BART limits and EPA's rationale for setting them. If a source is able to meet the limit through the application of combustion controls, there should be an exceedingly strong presumption that such controls constitute BART.

Commenters state that EPA's analytical approach disregarded the presumptive limits entirely. By using a top-down approach in which it started its analysis by evaluating SCR and then determined that SCR is BART for FCPP, EPA never undertook an assessment of combustion controls.

Commenters further argue that in its BART analysis, APS demonstrated that each unit at FCPP can meet the presumptive BART limits through the application of advanced combustion control technologies.

Under the BART rules, a deviation from presumptive BART, either upwards or downwards, is authorized if an alternative control level is justified based on ''careful consideration of the statutory factors'' (citing 70 FR 39131). Commenters argue that EPA did not carefully consider the BART factors and then conclude that an alternative to presumptive BART limits is appropriate. Instead, commenters state that EPA dismissed the presumptive BART limits before even considering the BART factors.

Response: EPA disagrees with the commenters' assertions that we did not give sufficient weight to presumptive BART NO_X limits, or that the BART determination for FCPP was performed in a manner inconsistent with the RHR.

As noted in other responses in this document, the presumptive NO_X limits established in the BART Guidelines are determined to be cost effective and appropriate for most units. The establishment of presumptive BART limits, and the corresponding technology upon which those limits are based, does not preclude States or EPA from setting limits that differ from those presumptions. Indeed, the five statutory factors enumerated in the BART Guidelines provide the mechanism for establishing different requirements. We note the RHR states:

> States, as a general matter, must require owners and operators of greater than 750 MW power plants to meet these BART emission limits. We are establishing these requirements based on the consideration of certain factors discussed below. Although we believe that these requirements are extremely likely to be appropriate for all greater than 750 MW power plants subject to BART, a State may establish different requirements if the State can demonstrate that an alternative determination is justified based on a consideration of the five statutory factors.[22]

The RHR also states:

> If, upon examination of an individual EGU, a State determines that a different emission limit is appropriate based upon its analysis of the five factors, then the State may apply a more or less stringent limit.[23]

Therefore, the presumptive emission limits in the BART Guidelines are rebuttable.[24] The presumptive emission limits apply to power plants with a total generating capacity of 750 MW or greater insofar as these sources are required to adopt emission limits at least as stringent as the presumptive limits, unless after considering the five statutory factors, the State determines that the presumptive emission limits are not appropriate. Moreover, the RHR and BART Guidelines do not exempt States from a five factor BART analysis, and that BART analysis may result in a determination of BART emission limits that are more or less stringent than the presumptive emission limits for subject to BART sources. The RHR states:

> For each source subject to BART, 40 CFR 51.308(e)(1)(ii)(A) requires that States identify the level of control representing BART after considering the factors set out in CAA section 169A(g), as follows:
>
> States must identify the best system of continuous emission control technology for each source subject to BART taking into account the technology available, the costs of compliance, the energy and non-air quality environmental impacts of compliance, any pollution control equipment in use at the source, the remaining useful life of the source, and the degree of visibility improvement that may be expected from available control technology.[25]

EPA's site-specific five-factor analysis performed for FCPP demonstrates that, in considering the expected remaining useful life of FCPP and the existing controls, SCR is cost effective, results in the most visibility improvement of all feasible control technologies, and does not cause energy or non-air quality environmental impacts that warrant its elimination as the top control option. As a result, regardless of the appropriateness of SCR as a control technology for most units on a national scale, or the extent to which EPA considered SCR in establishing the presumptive limits, the site-specific five-factor analysis performed for FCPP justifies a different NO_X BART limit than the presumptive NO_X BART limit.

EPA disagrees with commenters' assertions that we disregarded presumptive NO_X BART limits. Although we do not rely upon the numerical values of the presumptive NO_X limits listed in the BART Guidelines, the technological basis for presumptive NO_X BART limits, such as the use of combustion control technology, boiler type, and coal type, were considered in the site-specific five-factor analysis. Combustion control technology was specifically considered as a potential retrofit technology, and costs and visibility improvements associated with combustion controls were calculated and included in the TSD in order to provide a comparison to other NO_X control technologies.

In addition, EPA disagrees that the rule directs authorities to consider non-combustion control technology only when presumptive limits cannot be met using combustion control technology. While a BART determination deviating from presumptive BART must be supported by the results of the five-factor analysis, the rule does not restrict the ability of States (or in this case, EPA) to initiate a five-factor analysis.

[22] 70 FR 39131.

[23] 70 FR 39132.

[24] 71 FR 60619.

[25] 70 FR 39158.

Comment: Two of the owners of FCPP and the Navajo Nation asserted that advanced combustion controls constitute BART for FCPP because such controls will result in meaningful emission reductions and will contribute to reasonable progress toward visibility improvement.

One of these commenters noted that EPA has ''determined that combustion controls are not likely to be effective control technologies at FCPP'' (citing 75 FR 64226). The commenter asserted that EPA's determination is based on superficial analysis and is mistaken. This commenter cited its comments which contain a detailed analysis of the use of LNB and OFA on FCPP's units. According to the commenter, this analysis confirms that the use of advanced combustion controls on the five units at FCPP will reduce plant-wide NO_X emissions by 34 percent and, for those units that are subject to presumptive BART limits, the reductions more than satisfy the presumptive limits in the BART rules.

Two of the commenters added that considering that neither SCR nor advanced combustion controls will produce humanly perceptible visibility improvements in the nearby Class I areas, control technologies that result in limits that meet presumptive BART should be determined BART and that these reductions will contribute to reasonable progress toward the national visibility goal.

The Navajo Nation stated that a phased approach to emissions controls at FCPP, beginning with combustion controls, is fully consistent with both the CAA and the RHR, and is the approach that the EPA should take as a prudent trustee of the Navajo Nation.

This commenter added that the BART component of the CAA and RHR was meant to provide for a measured response to emissions from aging power plants; thus, requiring the most expensive controls is inconsistent with the law and regulations governing the BART process. The commenter also asserted that requiring a power plant over which EPA has exclusive jurisdiction to bear a greater regulatory burden than similarly situated plants regulated by the States is contrary to the purposes of the Act, the RHR, and to the economic interests of the Navajo Nation.

Response: EPA disagrees with the comment that advanced combustion controls on all five units at FCPP will reduce plant-wide NO_X emissions by 34 percent. APS has provided conflicting information regarding whether or not advanced combustion controls will be effective at significantly reducing NO_X emissions at FCPP. As outlined in the TSD for our 2010 BART proposal, we have concluded that combustion controls will not be effective at significantly reducing NO_X emissions at FCPP.

EPA disagrees that installation of SCR will not result in humanly perceptible impacts. As noted above, EPA's visibility modeling of the impacts of SCR installation at FCPP indicates visibility improvements at the sixteen nearby Class I areas ranging from 0.9 to 2.5 dv.

EPA agrees with certain aspects of comments from the Navajo Nation regarding a phased implementation strategy to attaining national visibility goals. In 40 CFR 51.308(f), States are required to revise their regional haze implementation plans every ten years, which is a process that involves evaluating their ability to attain reasonable progress goals and potentially updating their long-term strategy for regional haze. The periodic revision requirement described in 40 CFR 51.308(f), however, does not extend to the implementation plan for BART requirements. The phased approach described by the Navajo Nation has certain benefits, and a phased approach is incorporated into the alternative emission control strategy.

Comment: Two federal agencies and two groups of environmental advocacy groups assert that the NO_X emission limit for the units at FCPP should be 0.05 lb/MMBtu based on the capabilities of SCR. The federal agency commenters stated that, given that BART is meant to achieve the best possible emissions reductions, EPA should not base its emission limits on the ''minimum reduction expected from SCR, estimated by Hitachi Power Systems America'' (citing the TSD for our proposed rulemaking) because real-world application of SCR indicates that lower NO_X emission limits are routinely reached. Regarding the emission limits for Units 4 and 5, the commenters noted that of the 20 cell burners with SCR in 2010, 12 had lower NO_X limits than proposed by EPA for FCPP, with 3 EGUs at less than 0.06 lb/MMBtu. Based on this information, the original APS BART analysis of SCR at 0.06 lb/MMBtu (annual and 24-hour average), and the ''common knowledge'' that SCR can achieve at least 90 percent reduction, the commenters concluded that the installation of SCR at FCPP is capable of reducing annual NO_X emissions by 90 percent to 0.05 lb/MMBtu on an annual average basis.

One of the federal agency commenters specifically refuted EPA's rationale in the supplemental proposal for its 80 percent SCR efficiency estimate. The main points are summarized below.

EPA took into account the degradation of the SCR catalyst over its lifetime and calculated the emission limit to reflect the capability of the catalyst just prior to its replacement on a 3-year cycle. Commenters assert this issue is not a technical limitation on SCR, but is simply a cost item to be accounted for in the proper design and operation of the SCR.

EPA stated that pursuing NO_X control efficiencies of greater than 80 percent on Units 4 and 5 is limited by formation of H_2SO_4 from the SCR catalyst because the additional layers of catalyst needed to increase NO_X control efficiency would increase emissions of H_2SO_4, most affecting nearby Mesa Verde National Park. The commenter gave several reasons why this argument is incorrect.

EPA stated that the high ash content (approximately 25 percent) of the coal burned at FCPP may adversely affect the capability of SCR to reach the highest end of the control efficiency range without the use of additional layers of catalyst or more frequent catalyst replacement. According to the commenter, this is not consistent with previous EPA proposals for SCR emissions limits at facilities that use coal with similar ash content. Unless the FCCP ash contains some unusual catalyst poison, the 25 percent ash content is not a technical feasibility issue that would affect SCR effectiveness, but is a matter of proper SCR design, operation, and maintenance.

This federal agency commenter also asserted that NO_X BART for Units 1–3 should be 0.05 lb/MMBtu on an annual basis. The commenter noted that unsuccessful attempts to reduce NO_X emissions at FCPP with combustion controls occurred over a decade ago when this technology was not as fully developed as now, and pointed out that APS'S BART analysis concluded that such controls are technically feasible and would reduce NO_X emissions significantly.

The commenter evaluated Clean Air Markets Division (CAMD) data for 2000—2009 and found 33 dry-bottom, wall-fired boilers with NO_X emissions rates similar to FCPP Units 1–3 (0.6—0.8 lb/MMBtu) that had been reduced to 0.4 lb/MMBtu or less by application of modern combustion controls. The commenter asserted that because the typical approach is to first reduce NO_X emissions by combustion controls before adding SCR, these real-world CAMD data support the belief that using combustion controls and SCR could

reduce NO_X at FCPP Units 1–3 to 0.05 lb/MMBtu on an annual basis.

The commenter asserted that modern SCRs are routinely designed and operated to achieve 90 percent NO_X control and that based on this well-accepted industry standard, NO_X control of at least 90 percent is BART.

The commenter also contended that LNB and OFA are feasible for all five units at FCPP. The commenter rejected EPA's statement that it would be difficult to retrofit Units 4 and 5 with modern LNB technology (citing 76 FR 10534) and pointed out that the operator of FCPP has stated that the combination of LNB and OFA is technically feasible for these units. The commenter indicated that the use of LNB/OFA on Units 1–5 would reduce NO_X emissions by 27 to 46 percent, making SCR with a removal efficiency of 90 percent sufficient to satisfy a 0.05 lb/MMBtu NO_X limit.

The commenter stated that a 0.05 lb/MMBtu limit is consistent with EPA's determinations elsewhere, such as for the San Juan Generating Station (proposed limit of 0.05 lbs/MMBtu, 30-day rolling average) and for Desert Rock (final permit limit of 0.035 lbs/MMBtu, 365-day rolling average). According to the commenter, an EPA-issued permit containing a lower NO_X limit creates a presumption of technical feasibility for purposes of BART. Commenters also argued that emission limits should be based on a 30-boiler operating day rolling average.

Response: EPA disagrees with the commenter's assertion that emission limits associated with BART must meet the lowest emission rate achieved with that technology at any coal-fired power plant. The Regional Haze Regulations at 40 CFR § 51.308(e)(1)(ii)(A) state that:

> The determination of BART must be based on an analysis of the best system of continuous emission control technology available and associated emission reductions achievable for each BART-eligible source that is subject to BART * * *

Additionally, the BART Guidelines state that: ''[i]n assessing the capability of the control alternative, latitude exists to consider special circumstances pertinent to the specific source under review, or regarding the prior application of the control alternative'', (70 FR 39166) and that ''[t]o complete the BART process, you must establish enforceable emission limits that reflect the BART requirements * * *'' (70 FR 39172). The five-factor BART analysis described in the Guidelines is a case-by-case analysis that considers site specific factors in assessing the best technology for continuous emission controls. After a technology is determined as BART, the BART Guidelines require establishment of an emission limit that reflects the BART requirements, but does not specify that the emission limit must represent the maximum level of control achieved by the technology selected as BART. The BART Guidelines and the Regional Haze Rule do not preclude selection of the maximum level of control achieved by a given technology as BART, however, the emission limit set to reflect BART must be achievable by the specific source and should be determined based on consideration of site-specific factors. Therefore, limits set as Best Available Control Technology (BACT) during Prevention of Significant Determination (PSD) review (*e.g.,* Desert Rock) may provide relevant information, but should not be construed to automatically represent the most appropriate BART limits representative of a given technology for every facility.

While some commenters asserted that combustion controls would be feasible upstream of SCR to further reduce NO_X emissions to meet a limit of 0.05 lb/MMBtu, in its comment letter, the National Park Service (NPS) agreed with EPA that the addition of combustion controls may ''not (be) worth the small incremental reduction in NO_X emissions''. As discussed in the TSD for our proposed BART determination, because additional combustion controls at FCPP would not achieve significant reductions in NO_X and may cause operability issues for the boilers, EPA determined that SCR, without the addition of new combustion controls, is BART for FCPP.

Several environmental organizations argued that a 30-day rolling average emission limit of 0.05 lb/MMBtu should be determined BART for FCPP and provided supporting documentation.[26] EPA disagrees that an emission limit set in association with a BART determination must represent the lowest achieved emission rate from the best performing unit using that technology. EPA notes that, after further examination[27] of the commenters' supporting documentation, the maximum 30-day calendar average emission rates for the 17 top performing units exhibited significant variability (0.056—1.1 lb/MMBtu), even though the annual average emission rates listed are all below 0.07 lb/MMBtu.

In its comments, the National Park Service provided examples of 3 cell burner boilers currently equipped with SCR: Cardinal Units 1 and 2 and Belews Creek Unit 1. Based on NO_X data from the Clean Air Markets Division (CAMD), EPA notes that over 2009–2011, NO_X emissions from Cardinal Unit 1 showed an increasing trend. Cardinal Unit 2 shows a similar pattern as Unit 1, with an increasing trend in minimum and maximum 30-day calendar averages. Belews Creek 1 also showed a similar pattern of generally increasing minimum and maximum 30-day calendar average emission rates. Although commenters are correct in stating that the best performing units can achieve 30-day rolling emission rates of 0.05 lb/MMBtu or lower, CAMD data show significant variability in emission rates, both over time for a given unit, and between the best performing units. Some of this variability may be related to catalyst aging, or may be related to the participation of these units in trading programs (therefore these units operate without an absolute limit on individual boilers). Regardless of the cause of this variability, EPA notes that significant variability over a 30-day average, even among the best performing units, does exist, and EPA disagrees that an emission limit set in association with a BART determination must represent the lowest rate achieved on 30-day rolling average basis from the best performing unit using that technology.

EPA examined the most recent Clean Air Markets Division (CAMD) emission rate data for 12 cell burner boilers currently operating with SCR over 2009–June 2011.[28] In order to determine what might be an appropriate percent reduction to represent all cell burner boilers currently using SCR, we calculated the average percent reduction from the highest emission rate achieved over all 12 units. The percent reduction achieved from the monthly calendar average emission rate over 2009–June 2011 from the 12 units ranged from 48 to 90 percent, with an average value of 78 percent.

Commenters claim that emissions of sulfuric acid mist and the high ash content of coal used by FCPP, and considerations of catalyst life are not barriers to achieving higher NO_X reduction efficiencies than proposed by EPA. EPA disagrees with comments that our statement regarding the impact of additional layers of catalyst on increasing sulfuric acid emissions is unsupported. EPA understands from our

[26] See items (2 and 3) in collection of documents titled ''Public Comment_8 Environmental Groups (Barth)_Letter 5–2–11''. Document Number EPA–R09–OAR–2010–0182.

[27] See the Response to Comments, Section 8.1 in the docket for this final rulemaking.

[28] See the Response to Comments Section 8.1 in the docket for this final rulemaking.

correspondence with Hitachi Power Systems America that each layer of catalyst used results in an incremental increase in the conversion rate of SO_2 to SO_3. The EPRI method used for calculating sulfuric acid requires the input of a SCR catalyst oxidation rate. This oxidation rate varies depending on catalyst type and number of layers used. For the ultra low SO_2 to SO_3 oxidation catalysts offered by Hitachi, each layer contributed roughly 0.167 percent conversion, with three layers totaling 0.5 percent. The use of an additional layer, such as in a 3+1 system, would thus increase the conversion rate to nearly 0.7 percent when all four catalyst layers are in operation. Further NO_X reductions achieved from the addition of a 5th layer of catalyst would likely exacerbate pluggage and back-pressure concerns related to the ash content of the coal and may affect cost and operation of the unit. Commenters have not submitted information to refute this.

The ash content of coal has an important effect on the effectiveness of SCR because high ash content in coal can cause pluggage and catalyst erosion and thus reduce available catalyst area and activity for NO_X reduction. Commenters point to San Juan Generating Station (SJGS) and Desert Rock as facilities with lower SCR-based NO_X emission limits that use high ash content coal. EPA Region 6 recently finalized a FIP for SJGS with a limit of 0.05 lb/MMBtu, representing an 83 percent reduction in NO_X emissions. The emission limit EPA Region 6 set for SJGS is lower than the limit we set for FCPP because SJGS uses a different boiler type than FCPP and modern combustion controls have already been installed and have reduced NO_X emissions at SJGS by 29–33 percent.[29] EPA has determined that because Units 4 and 5 at FCPP are cell burner boilers, modern combustion controls would not significantly reduce NO_X emissions from FCPP. Even though the emission limit differs, the reduction efficiency from the installation and operation of SCR at FCPP and SJGS are generally consistent, particularly when considering the similarly high ash content of coal (greater than 20 percent) used at both facilities. In 2008, EPA Region 9 issued a pre-construction Prevention of Significant Deterioration (PSD) permit to allow construction of a new coal-fired power plant on the Navajo Nation, known as the Desert Rock Energy Facility (Desert Rock).[30] If constructed, Desert Rock would have used the same coal as FCPP from the BHP Navajo Mine and the final PSD permit set a NO_X limit of 0.05 lb/MMBtu (on a rolling 365-day average). Commenters argue that if Desert Rock was required to meet a limit of 0.05 lb/MMBtu using the same coal as FCPP, the ash content should not hinder FCPP from achieving similarly low NO_X emission rates. EPA notes that if constructed, Desert Rock would have been a new, state-of-the-art facility specifically designed with boiler characteristics, combustion controls, and post-combustion controls to meet the Best Available Control Technology (BACT) requirements for numerous criteria and non-criteria pollutants. FCPP is an existing, over 40-year-old power plant. The Regional Haze Rule requires a case-by-case BART (best available retrofit technology) determination, which need not be equivalent to BACT for new facilities.

Based on the significant 30-calendar day average variability exhibited by the top performing units cited by commenters, and the variability in 30-calendar day average and the 2009–June 2011 30-calendar day average percent NO_X reduction of 78 percent exhibited by 12 cell burner boilers equipped with SCR, EPA continues to affirm that a limit representing an 80 percent reduction in NO_X emissions reflects what is achievable using the technology determined as BART for FCPP.

Comment: One of the owners of FCPP stated a willingness to support a NO_X emission limit of 0.098 lb/MMBtu for Units 4 and 5 under the alternative proposal, but only in the context of an alternative emission reduction strategy that includes resolution of the related issues.

The Navajo Nation similarly endorsed the proposed 80 percent reduction in NO_X emissions from Units 4 and 5, with a limit of 0.098 lb/MMBtu, under the supplemental proposal, based on the site-specific parameters at FCPP.

Response: EPA agrees that the appropriate limit for Units 4 and 5 under the alternative strategy is 0.098 lb/MMMtu (based on a rolling average of 30 successive boiler operating days). The final rule reflects this limit.

Comment: One of the owners of FCPP opposed EPA's proposal to ''phase in'' NO_X controls at FCPP under a traditional BART FIP, commencing 3 years from the date the FIP becomes effective. The commenter asserted that this proposal does not afford adequate time to properly design, engineer, and construct the controls before the compliance deadline.

Response: EPA partially agrees with this comment. We revised the BART compliance date for one 750 MW unit to within 4 years from the effective date of this final rule. The remaining 750 MW unit and Units 1–3 must meet a compliance date of within 5 years of the effective date of the final rule. The revised compliance time within 4 and 5 years allows time for design, engineer, and construct controls.

Comment: One environmental advocacy group stated that the proposed plant-wide BART limit of 0.11 lb/MMBtu across all five FCPP units violates Executive Order 12898 on environmental justice. Specifically, the commenter asserted that given the significant differences in pollution control systems among FCPP's five units, allowing a plant-wide average could create pollution ''hotspots'' with respect to co-pollutants. As an example, the commenter noted that while Units 4 and 5 have baghouses, Units 1–3 use less efficient venturi scrubbers for control of sulfur dioxide, particulate matter, and mercury. The commenter asserted that the plant-wide average limit for NO_X would allow increased emissions from Units 1–3 in the event of a temporary outage or reduced output from one or both of the larger units. The commenter stated that while this may not increase the total NO_X emissions from the plant, it would increase the amount of mercury and other toxic co-pollutants emitted into the surrounding community, which is a low-income community of color.

Response: EPA disagrees with the commenter that a plant-wide BART limit of 0.11 lb/MMBtu across all five FCPP units violates Executive Order 12898 on environmental justice. This final rule will not have disproportionately high and adverse human health or environmental effects on minority or low-income population because it increases the level of environmental protection for all affected populations in the area including any minority or low-income population.

The commenter is correct that in the event of a temporary outage or reduced output from Unit 4 or 5 the operator could continue to operate FCPP units 1–3 under the original BART proposal provided that they maintain compliance with the plant-wide emission limit of 0.11 lb/MMBtu for NO_X. In order to maintain compliance with the plant-wide emission limit, Units 1–3 would have to operate at a lesser capacity than

[29] See page 4–3 of report titled ''PNM BART Report for SJGS_final to PNM_June 18, 2007.pdf'' in the docket for this final rulemaking. Pre-consent decree emission rates on Units 1–4 at SJGS ranged from 0.42–0.45 lb/MMBtu. Post-consent decree emission limits for those units were 0.30 lb/MMBtu.

[30] Desert Rock has not been constructed. EPA requested a voluntary remand of the Desert Rock PSD permit in 2009 to incorporate new applicable requirements. The developers of Desert Rock have not yet submitted a revised PSD application to EPA.

they would normally operate if Unit 4 and 5 were functioning because units 1–3 have higher NO_X emission rates than Units 4 and 5. The NO_X emission rates from Units 1–3 with SCR, based on 80 percent control of current emission rates would be 0.16, 0.13, and 0.12 lb/MMBtu respectively which are higher than the proposed plant-wide emission limit. Therefore, to maintain compliance with the plant-wide NO_X emission limit (which is based upon a 30-calendar day rolling average), Units 1–3 would have to operate at a reduced capacity in any 30-day period in which Units 4 and 5 are operating a reduced capacity, so as to maintain the balance among the five units. This reduced capacity would result in an overall lower rate of emission for mercury and other co-pollutants from Units 1–3. Therefore, there would be no increased emissions of mercury or other co-pollutants and no ''hot-spots'' or disproportionately high and adverse human health or environmental effects on minority or low-income population.

2. Comments on the Proposed BART Determination for PM

Comment: One of the owners of FCPP asserted that the existing controls at FCPP constitute BART for PM emissions. The commenter contended that the impact of PM controls on the visibility in the neighboring Class I areas would be ''vanishingly small'' while the cost would be ''exorbitant'' (resulting in cost effectiveness ranging from $51,500–$148,659 per ton reduced and from $1.4 billion–$3.7 billion per dv improvement).

The Navajo Nation stated that EPA acknowledged the high incremental cost of new PM controls on Units 1–3 (citing 75 FR 64230), yet justified the cost effectiveness of baghouses by comparison with similar retrofit projects in EPA Region 9. This commenter asserted that EPA failed to properly evaluate the costs associated with installation of baghouses using site-specific parameters, thereby deviating from the BART Guidelines. The commenter asserted that continued operation of venturi scrubbers to meet emission limits of 0.03 lb/MMBtu and an opacity limit of 20 percent satisfies BART for Units 1–3.

The Navajo Nation expressed support for the supplemental proposal to require a PM emission limit of 0.015 lb/MMBtu and 10 percent opacity limit on Units 4 and 5. The commenter presumed that FCPP can readily meet these standards prior to installation of SCR since the limits can be achieved with the existing baghouses.

Regarding the EPA's proposed 10 percent opacity standard for each unit, two of the owners of FCPP stated that the EPA has not specified any costs or predicted any improvement in visibility that would result from such limits. The commenters asserted that without such basis, the EPA cannot justify the proposed opacity limits.

Response: As stated in our proposed BART determination for PM, the existing venturi scrubbers on Units 1–3 at FCPP do not constitute BART. In our proposed BART determination for FCPP, EPA proposed a PM emission limit for Units 1–3 that can be achieved through the installation of any of four different PM control options. At the time of our BART proposal, the MATS Rule for electric utility steam generating units had not yet been proposed, nor had APS suggested its alternative emission control strategy to close Units 1–3 in lieu of complying with BART for NO_X. Because the final MATS rule has been issued [31] and sets filterable PM and mercury limits that would be applicable to the units at FCPP, and because EPA is finalizing this rule to allow APS to either comply with the alternative emission control strategy or BART for NO_X, EPA is determining that it is not necessary or appropriate at this time to finalize our proposal to set new PM limits for Units 1–3.

Regarding our proposed BART determination for PM for Units 4 and 5, we are finalizing the proposed 0.015 lb/MMBtu emission limit based upon the proper operation of the existing baghouses. However, we have determined based on the comments we received from the operator of FCPP that it is not necessary or appropriate to take final action on the proposed 10 percent opacity limit. We have determined that imposing a 10 percent opacity limit will not provide greater assurance that Units 4 and 5 at FCPP are meeting the PM emission limit of 0.015. We have determined previously that a 20 percent opacity limit is sufficient to ensure the PM emission limit is being continuously met. The 10 percent opacity limit was generally supported by the Navajo Nation and environmental groups. EPA has promulgated some recent rules for electric generating units that have retained a 20 percent opacity standard rather than reducing that limit to 10 percent. Specifically, EPA's revised the New Source Performance Standard for large electric generating units at 40 CFR Part 60, Subpart Da, to lower the PM emission limit for new units to 0.09 lb/MMBtu for gross energy output or 0.097 lb/MMBtu for net energy output. For existing units that reconstruct or modify, Subpart Da establishes an emissions limit of 0.015 lb/MMBtu. For both standards, EPA retained a 20 percent opacity standard as being sufficient to ensure compliance with either the 0.090 (0.097) lb/MMBtu or 0.015 lb/MMBtu PM emission limit. EPA's MATS rule, which was finalized just a few months ago, also retained a 20 percent opacity standard as being sufficient to ensure compliance with the PM emission limit that will be required for electric generating units subject to that rule.

The importance of the opacity limit is that a certain percentage opacity is an instantaneous demonstration that a unit is in compliance with its PM emission limit. If a unit does not install and operate a PM continuous emissions monitor, then EPA ensures compliance with the PM emission limit by requiring an episodic source test. For the periods between episodic source testing, EPA can reasonably assure continuous compliance with the PM emission limit by observing that the unit's stack emissions do not exceed a set opacity. EPA's recent rulemakings have determined that 20 percent opacity is sufficient to ensure compliance with a PM emission limit lower than the emission limit we have determined is BART for Units 4 and 5. Accordingly, EPA is determining the 20 percent opacity limit that we promulgated in our 2007 FIP for FCPP as being adequate to ensure continuous compliance with the PM BART limit or 0.015 lb/MMBtu. EPA concludes that this change is a logical outgrowth of the comments received on the proposal.

Comment: One commenter indicated that EPA has proposed a BART limit only for PM, which appears to be only filterable particulate matter. The commenter asserted that the BART guidelines specify that BART should be evaluated and defined for both PM_{10} and $PM_{2.5}$ (citing 40 CFR part 51, Appendix Y, section IV.A) and, consequently, that EPA must evaluate and define BART limits for both PM_{10} and $PM_{2.5}$. The commenter also asserted that as part of the $PM_{2.5}$ BART determination, EPA must impose emission limits on condensable particulate matter, which is typically in the size range of 2.5 micrometers or smaller. Thus, the commenter stated that in addition to a filterable PM BART limit, EPA should impose a BART limit on total $PM_{2.5}$.

One public interest advocacy group supported EPA's proposal and supplemental proposal to require a PM limit and a 10 percent opacity limit on Units 4 and 5. The commenter indicated

[31] See 77 FR 9304, February 16, 2012.

that these limits should become effective prior to SCR installation, regardless of whether the BART or alternative emission control plan is implemented.

Response: EPA disagrees with the commenters' recommendation that the condensable fraction must be included in the PM BART limits. EPA has previously outlined our rationale for why an H_2SO_4 limit is not appropriate at this time (it will be addressed through the pre-construction permitting process if needed) and EPA expects that H_2SO_4 will be the main component of condensable PM that would be expected from a coal-fired EGU with an SCR.

EPA agrees with commenters that PM limits on Units 4 and 5 should become effective prior to SCR installation, as Units 4 and 5 generally already meet the 0.015 lb/MMBtu limit.[32] EPA is finalizing a compliance date for PM emission limits on Units 4 and 5 to be within 6 months after restart following the next scheduled major outages in 2013 and 2014. As discussed previously, EPA has determined that finalizing the proposed opacity limit of 10 percent on Units 4 and 5 is not necessary or appropriate at this time.

3. Comments on BART for SO_2

Comment: Some commenters stated that SO_2 BART should be required for FCPP, while one commenter simply noted that FCPP is subject to BART for SO_2. One federal agency commenter stated that FCPP is subject to BART for SO_2. The commenter stated that Units 4 and 5 should be able to meet a limit of 0.12 lb/MMBtu on an annual average basis by upgrading the existing scrubbers.

One set of environmental advocacy groups discussed the Regional Haze rules, the TAR, and the SO_2 emissions from FCPP and concluded that EPA is under a legal obligation to conduct a BART analysis for SO_2 emissions from FCPP and, to the extent EPA has failed to make a finding that it is ''necessary or appropriate'' to regulate SO_2 emissions from the FCPP, such a failure is arbitrary, capricious, and not supported by the administrative record.

According to the commenter, EPA argues that FCPP's current SO_2 emissions limits are ''close to or equivalent'' to the limit that would be established under BART. The commenter asserted that this conclusion is arbitrary and capricious because EPA has failed to undertake any scientific or technical analysis to support its conclusion.

A public interest advocacy group stated that the SO_2 limits need to be tightened for FCPP to further reduce visibility impairment and to reduce the acidification of rainfall caused by the formation of H_2SO_4. The commenter stated that because the damaging effects of H_2SO_4 in precipitation on ancestral Puebloan sandstone dwellings and pictographs are not fully understood, it is disappointing for the FCPP proposals not to address SO_2.

Response: EPA finalized a FIP in May 2007 that required significant SO_2 emissions reductions from FCPP and established continuous SO_2 emissions limits for FCPP. See 72 FR 25698 (May 7, 2007). The 2007 FIP required FCPP to increase the removal efficiency of its SO_2 emissions controls from 72 percent to 88 percent, resulting in an SO_2 emissions reduction of approximately 22,000 tons per year. EPA had proposed this FIP in September 2006. The 2006 proposed FIP stated that ''EPA believes that the SO_2 controls proposed today for FCPP are close to or the equivalent of a regional haze BART determination of SO_2. This takes into consideration the early reductions this action will achieve and the modification to the existing SO_2 scrubbers.'' 72 FR 25700. In finalizing that rulemaking in the 2007 FIP, EPA stated that it was exercising its authority pursuant to Section 49.11 of the TAR to implement measures that are necessary or appropriate to protect air quality in Indian country. Id. EPA determined that the SO_2 emissions reductions would be federally enforceable as soon as the 2007 FIP was finalized, which would be potentially five years before EPA could achieve enforceable SO_2 emissions reductions through making a BART determination. See id. EPA also considered the Navajo Nation's request for EPA to establish enforceable SO_2 emissions reductions immediately that, in the opinion of the Navajo Nation, ''appear[] to be equivalent to BART.'' Id. Therefore, EPA's determination on this issue in finalizing the 2007 FIP was ''that it is neither necessary nor appropriate at this time to undertake a BART determination for SO_2 from FCPP given the timing of the substantial SO_2 reductions resulting from this FIP.'' Id. In addition, we stated that ''given that the SO_2 controls for FCPP immediately achieve significant reductions in SO_2 comparable to what could ultimately be achieved through a formal BART determination, EPA believes that it will not be necessary or appropriate to develop a regional haze plan to address SO_2 for the Navajo Nation in the near term.'' Id. 25700–701. Both APS, as operator of FCPP, and Sierra Club sought judicial review of our 2007 FIP.

The comments on this action essentially repackage the comments we received and provided a response for on the 2007 FIP. The comments have not presented any new facts or legal considerations that have arisen or changed since we responded to comments requesting a BART determination for SO_2 in 2007.

4. Other Comments on BART

Comment: One group of environmental advocacy groups stated that as an alternative to a condensable $PM_{2.5}$ limit, EPA could set limits on the pollutants which form condensable $PM_{2.5}$, such as sulfuric acid mist (H_2SO_4) and ammonia, as EPA proposed as part of the San Juan Generating Station (SJGS) BART rulemaking (citing 76 FR 503–4, January 5, 2011). If EPA adopts this approach, the commenter urged EPA to set an emission limit for H_2SO_4 no higher than the limit of 1.06×10^{-4} lb/MMBtu for each unit as proposed for SJGS based on the use of low reactivity catalyst and the most current information from the Electric Power Research Institute. If CEMS are unavailable for this pollutant, the commenter urged EPA to require stack test monitoring for H_2SO_4 on a more frequent basis than annual monitoring.

The commenter also requested that EPA set emission limits for ammonia at a rate no higher than the 2.0 parts per million as proposed at SJGS, to be monitored with CEMs.

Response: EPA disagrees with the comment that Region 9 should set the same emission limits for ammonia and sulfuric acid as Region 6 in its proposed BART determination for SJGS.

In its January 5, 2011 proposed rulemaking for SJGS, Region 6 proposed an ammonia slip limit of 2.0 ppmvd on an hourly average and requested comment on a range from 2.0 ppmvd to 6.0 ppmvd. In its final BART rulemaking (76 FR 52388, August 22, 2011), Region 6 determined that an emission limit and monitoring were not warranted for ammonia and did not finalize its BART determination for SJSG with the proposed 2.0 ppmvd ammonia limit.

In its proposal for SJGS, Region 6 proposed an emission limit for sulfuric acid of 1.06×10^{-4} lb/MMBtu on an hourly average, and requested comment on a range from 1.06×10^{-4} to 7.87×10^{-4} lb/MMBtu. In its final rulemaking, Region 6 finalized an emission limit for sulfuric acid of 2.6×10^{-4} lb/MMBtu to minimize its contribution to visibility impairment. Region 6 calculated this emission limit using an estimation

[32] See document titled: ''TSD ref. [2–3, 95] FCPP_BART_Scenarios_Emissions_EPA_Proposal.xlsx'' in the docket for this proposed rulemaking at EPA–R09–OAR–2010–0683–0017.

methodology from EPRI, assuming the use of an ultra-low activity catalyst (0.5 percent total conversion of SO_2 to SO_3), zero ammonia slip, no sorbent injection, and EPRI-recommended values for removal by existing downstream control equipment.

Actual measurements of baseline sulfuric acid emissions have not yet been determined at FCPP and the calculation of projected sulfuric acid emissions after installation and operation of SCR using the EPRI methodology is dependent on future decisions made by the facility on the type of SCR catalyst and number of layers used, as well as numerous assumptions about loss to downstream components, such as air preheaters and baghouses, the true values of which are currently not yet defined or known for FCPP. Furthermore, EPA Region 9 is the permitting authority for preconstruction permits on the Navajo Nation, and an increase in sulfuric acid emissions from the installation of SCR may trigger major modification PSD permit requirements at a low threshold of 7 tpy (see 40 CFR 52.21) or Tribal minor new source review (NSR) permit requirements at a threshold of 2 tpy (see 40 CFR Part 49 Subpart C). Preconstruction permitting review may also be triggered from significant emissions increases of $PM_{2.5}$ from SCR installation at FCPP. If one of these pollutant triggers PSD, the permitting authority must provide an Additional Impact Analysis under the PSD program. The PSD program also requires the permitting authority to determine BACT for pollutants that triggered PSD. A similar control technology review may also be required at the discretion of the permitting authority under the Tribal Minor NSR program. For these reasons, Region 9 has determined that for FCPP, emission limits and monitoring requirements for sulfuric acid are more appropriately reviewed in the preconstruction permitting process.

Comment: Citing the BART Guidelines at 40 CFR part 51, Appendix Y, section V, one environmental advocacy group stated that BART emission limits and compliance schedules must be based on ''boiler operating day.''

The commenter asserted that the ''very high'' proposed BART emission limits suggest that EPA set these limits to encompass spikes that occur during startups and shutdowns. The commenter asserted that setting and enforcing limits based on boiler operating day would necessarily exclude spikes that occur before and after outages, such as startups, shutdowns, and malfunctions. According to the commenter, such periods should be subject to separate limits set at the pre-SCR uncontrolled level to encourage good work practice standards during these periods while allowing the SCR and other emission control technologies to be operated at an efficient and continuous capacity in compliance with BART.

Response: EPA agrees that the NO_X limit under the alternative emission control strategy should be set for 30 successive boiler operating days and that a ''boiler operating day'' should be defined as any day in which the boiler fires fossil fuel. Because the NO_X emission limit under the alternative emission control strategy already includes periods of startup and shutdown, separate limits are not required. The final rule reflects this approach.

For the original proposed BART determination, EPA does not find it necessary to define boiler operating day because the BART limit is a heat input-weighted plant-wide limit. Only operating hours for any of the five units would be included. When a unit is not operating, those hours are not included in the plant-wide 30-day average. Additionally, the heat input-weighted plant-wide limit also includes periods of startup and shutdown; therefore, separate limits are not required.

Comment: One environmental advocacy group stated that EPA should require FCPP to install all control equipment within 3 years of the date of a final FIP, as EPA did at SJGS. The commenter stated that there is ample data to support the contention that all this emission control technology can be installed and operational within 3 years or less.

Response: EPA disagrees with the comment that Region 9 should set a 3-year compliance timeframe because Region 6 proposed a 3-year compliance timeframe for SJGS. In its proposed rulemaking for SJGS,[33] Region 6 proposed a 3-year timeframe for SJGS to comply with the proposed limits but requested comment on a compliance range of 3–5 years. In its final rulemaking,[34] Region 6 finalized a compliance timeframe of 5 years and determined that because of site congestion at SJGS, a longer timeframe than average (37–43 months) to install SCR on the 4 units at SJGS would be required. The final BART determination for FCPP requires retrofit of five existing units at FCPP. In the final rule for FCPP, Region 9 is requiring installation and operation of SCR controls for one 750 MW unit within 4 years of the effective date, and the remaining 750 MW unit and Units 1–3 within 5 years of the effective date. Based on all of the factors that will be involved in the design, purchase and operation of the SCR controls, Region 9 considers this schedule to be appropriate and expeditious.

G. Comments on APS's Alternative and EPA's Supplemental Proposal

Comment: One of the owners of FCPP pointed out that the November 2010 APS proposal included two critical components: (1) A proposal to close Units 1–3 and install SCRs on Units 4 and 5; and (2) EPA's contemporaneous agreement that these activities resolve any liability FCPP may have under regional haze BART, Reasonably Attributable Visibility Impairment Best Available Retrofit Technology (RAVI BART), NSR, and New Source Performance Standard (NSPS). The commenter asserted that EPA's supplemental proposal addresses only half of APS'S proposal—the half that achieves better than BART emission reductions, plant-wide reductions of all other emissions, and greater visibility improvement at nearby Class I areas—but ignores the other half of the APS proposal—the half that provides APS and the FCPP co-owners with needed regulatory certainty. Unless there is a contemporaneous resolution of these key issues with EPA, the commenter cannot and does not support EPA's supplemental proposal.

Response: EPA understands that the owners of FCPP were seeking to resolve any potential regulatory noncompliance issues simultaneously. However, EPA must use different mechanisms for promulgating rules and resolving enforcement issues. The comment requests resolution of potential past non-compliance with NSR and NSPS requirements. Potential past non-compliance can be resolved through entering into a Consent Decree containing a judicially approved release from liability. Such a Consent Decree under the CAA must be approved by the United States Department of Justice and must also be lodged in a United States District Court where the public is allowed to comment on it. Consent Decrees must be entered by the United States District Court for a release of liability of potential past non-compliance to be effective. Accordingly, this rulemaking action cannot effectuate any release of liability for potential past non-compliance with NSR or NSPS.

EPA is aware that several environmental groups have petitioned the Department of Interior to make a

[33] See 76 FR 491, January 5, 2011.

[34] See 76 FR 52388, August 22, 2011.

finding that impairment at Class I areas is reasonably attributable to FCPP.[35] The NPS, on behalf of Department of Interior, has declined to make such a finding based on EPA's work in this rulemaking.[36] The environmental groups also filed a Complaint in the United States District Court for the District of Columbia [37] contending that the Department of Interior was unreasonably delaying making a finding of reasonable attribution from FCPP. On June 30, 2011, the Court dismissed the Complaint [38] holding that the NPS's letters refusing to make the finding of reasonable attribution constituted denying the Petitioners' request for a RAVI finding. Therefore, there are no pending petitions with the Department of Interior requesting a finding that visibility impairment at any Class I areas is reasonably attributable to FCPP. In any event, a BART determination under RAVI would likely be the same as under this BART determination.

Comment: One of the owners of FCPP stated that it is imperative to note that its support of the supplemental proposal (if other potential liabilities are resolved as discussed above) is based solely on the rationale that this achieves a result better than the proposed BART FIP, and that this ''better than BART'' outcome is a result of the closure of Units 1, 2, and 3. The commenter stressed that in no case—either in the original BART FIP proposal or in the supplemental proposal—does the commenter support any determination that SCR constitutes BART for FCPP. A second FCPP owner stated that its acceptance of the supplemental proposal upon resolution of the other potential issues would be a voluntary action based on its own business interests; the commenter does not support any BART determination that calls for installation of SCR at FCPP.

Response: EPA disagrees with the commenters that SCR is not BART. Based on our five-factor analysis, as described in the TSD for our proposed BART determination, SCR is cost effective and results in the greatest anticipated improvement in visibility. One of the owners of FCPP notes that the ''better-than-BART'' outcome is a result of the closure of Units 1, 2, and 3. However, the closure of Units 1–3 alone does not result in greater emission reductions than EPA's proposed BART determination, and represents only a roughly 30 percent reduction from baseline emissions. The closure of Units 1–3, in combination with SCR on Units 4 and 5, results in the ''better-than-BART'' outcome.

The voluntary nature of the alternative emission control strategy does not negate EPA's BART determination because (1) EPA must first determine what BART is in order to fulfill the requirements of the alternative program to BART as prescribed in the Regional Haze Rule, and (2) EPA cannot require the full or partial closure of a facility as a BART alternative, therefore the alternative emission control strategy remains an optional business choice of the owners of FCPP to implement in lieu of BART, if they see fit.

Comment: One environmental advocacy group and one federal agency asserted that the supplemental proposal is not better than BART for NO_X. Generally, commenters argue that based on the extended compliance timeframe for the alternative emission control strategy, the use of an artificially inflated baseline, the potential increase in output from Units 4 and 5, and assuming that SCR can achieve 0.05 lb/MMBtu of NO_X on an annual basis, the BART alternative fails to achieve greater cumulative NO_X reductions than would installation of BART (SCR) on all five units.

Response: EPA disagrees with the comment that the alternative emission control strategy is not better than BART, but agrees that a reexamination of baseline emissions and projected capacity factors in the future is warranted. As reported in the TSD for our proposed BART determination, facility-wide NO_X emissions over 2001–2009 ranged from 40,331 to 47,300 tpy. While the baseline emissions provided by APS and used by EPA in our Supplemental Proposal was within the range of annual NO_X emissions, in response to these comments, we conducted an additional analysis to compare the alternative emission control strategy against our final BART determination for NO_X using the 2001–2010 average as the baseline emission rate and an assumed capacity factor of 81 percent [39] for Units 4 and 5 under the alternative emission control strategy.[40] This analysis shows that in 2014 and 2015, the alternative emission control strategy results in lower NO_X emissions than BART due to the closure of Units 1–3 at the end of 2013. In 2016, 2017, and 2018, BART results in lower emissions than the alternative, and in 2019 and beyond, the alternative emission control strategy (5,556 tpy), with phased-in controls on Units 4 and 5 by the end of 2018, results in lower emissions than BART (8,479 tpy). In total, the BART Alternative results lower emissions from FCPP over more calendar years (2014–2015, and 2019 and beyond) than does BART (2016–2018). Even if APS operated Units 4 and 5 at 100 percent capacity, EPA calculates that emissions under the alternative emission control scenario in 2019 and beyond to be 6,859 tpy, which is still lower than under BART (8,479 tpy). On a cumulative basis, i.e., the sum total of NO_X emissions over 2011 to 2064, the BART Alternative also results in lower emissions than BART, both at an 81 percent capacity factor and at 100 percent capacity.

Commenters argue that if the BART emission limit were lower, the alternative would not be better than BART. For example, if EPA required an emission limit representing a 90 percent reduction in NO_X emissions, annual NO_X emissions would be lower than 5,000 tpy. However, as discussed in responses to similar comments, EPA has determined that an 80 percent reduction in NO_X emissions is BART for FCPP. It is inappropriate to compare the alternative emission control strategy against a target for BART that commenters would like to see based on maximum emission reductions achieved without consideration of site-specific characteristics of FCPP that EPA has determined are not appropriate for FCPP.

Commenters further argue that by offering FCPP a BART compliance deadline of July 2018, EPA is illegally extending a mandatory deadline under the CAA, and that installation of SCR at Units 4 and 5 can easily be accomplished within 2 years. EPA disagrees and notes that the compliance timeframe for EPA's BART determination requiring SCR

[35] See National Parks Conservation Association, *et al.,* Petition to United States Department of Interior, United States Department of Agriculture, and United States Forest Service, February 16, 2010, in the docket for this rulemaking.

[36] See letter from Will Shafroth, Department of Interior to Stephanie Kodish, NPCA, March 8, 2011 in the docket for this proposed rulemaking.

[37] See National Parks Conservation Association, *et al.*, Petition to United States District Court for the District of Columbia, January 20, 2011, in the docket for this final rulemaking.

[38] See *National Parks Conservation Association, et al., Plaintiffs,* v. *United States Department of Interior and United States Department of Agriculture, Defendants.* Civil Action No. 11–130 (GK). United States District Court for the District of Columbia, June 30, 2011, 794 F. Supp. 2d 39; 2011 U.S. Dist. LEXIS 70170; 74 ERC (BNA) 1015. In the docket for this final rulemaking.

[39] In testimony to the ACC, Mark Schiavoni of APS testified that he anticipates capacity factors over 2015–2030 to range from 75–81 percent for Units 4 and 5. See document titled ''Schiavoni Testimony_TRANSCRIPT.pdf'' in the docket for this final rulemaking.

[40] See document titled ''BART vs Alternative.xlsx'' in the docket for this final rulemaking.

installation on all 5 units is within 5 years of the effective date of the final rule, consistent with the maximum time allowed under the CAA § 169A(g)(4) in the definition of ''as expeditiously as practicable''. The commenter is confusing requirements under BART and requirements under the alternative to BART. EPA is not extending the BART compliance deadline beyond a 5-year period. Rather, EPA is allowing additional time to implement the alternative emission control strategy, as allowed under the provisions of the RHR for the implementation of ''other alternative measure rather than to require sources subject to BART to install, operate, and maintain BART'' (See 40 CFR 51.308(e)(2)). In our Supplemental Proposal, EPA cited the requirement (under 40 CFR 51.308(e)(2)(iii)) that ''all necessary emission reductions take place during the period of the first long-term strategy for regional haze''.

EPA disagrees with commenters that reductions under the alternative to BART violates 40 CFR 51.308(e)(2)(iii). The requirement simply states the reductions take place during the period of the first long term strategy and does not specifically prescribe that those reductions must take place at the beginning, middle, or end of the period of the first long-term strategy.

H. Other Comments

Comment: Forty-five private citizens and several private citizens who submitted written comments at a public hearing explicitly stated that they support EPA's efforts to clean up FCPP. Many of these commenters asked for the strictest regulations. Another private citizen implied that EPA should act to clean up emissions from FCPP and noted that cleaner air will result in a cleaner Colorado snow pack, which will result in cleaner water in the Colorado River.

Twelve private citizens and a few private citizens who submitted written comments at a public hearing stated that FCPP should be de-commissioned. Several of these commenters asserted that the plant should only be shut down if it cannot cease emitting pollutants, while others stated the plant should be shut down immediately.

Nine private citizens and some of the private citizens who submitted written comments at a public hearing stated that renewable energy sources can be used in place of coal-fired power plants.

Response: EPA acknowledges the comments supportive of our proposals but disagrees with commenters that suggest that FCPP should be de-commissioned or shut down immediately.

In addition to other CAA programs, EPA assesses air quality with respect to NAAQS. The Four Corners area is designated attainment for each of the NAAQS.[41] This means that the air quality in the Four Corners area is meeting the national health-based standards set by EPA.

For this action, EPA finds that under 40 CFR 49.11, it is necessary or appropriate to achieve emissions reductions of NO_X from FCPP required by the CAA's Regional Haze program. NO_X is a significant contributor to visibility impairment in the numerous mandatory Class I Federal areas surrounding FCPP. The emission reductions finalized will help achieve the goals of the Regional Haze Rule. The Regional Haze Rule however does not require nor does it authorize EPA to de-commission or shut down facilities to achieve the goals of the rule.

EPA agrees with commenters who stated that renewable energy sources can be used in place of coal-fired power plants. However, the Regional Haze Rule does not require that coal-fired facilities use or switch to renewable energy sources to meet the goals of the rule.

Comment: The Navajo Nation pointed out that as a federal agency, EPA has a trust responsibility to the Navajo Nation that requires it to give special consideration to the Nation's best interests in any action.[42] Because of the significant economic interest of the Navajo Nation in FCPP the commenter asserted that the BART proposal clearly implicates the Nation's tribal trust interests. The commenter further contended that since EPA is adopting a FIP for BART in lieu of a TIP by the Navajo Nation, the EPA is essentially ''standing in the shoes'' of the Nation for purposes of making the BART determination and should, therefore, defer to tribal views when making environmental policy decisions and give the same weight to the BART factors that the Navajo Nation would in determining BART for FCPP; that is, to the extent that the Nation recommends a particular control technology as BART for power plants located on the Nation's lands, EPA should give substantial weight to that recommendation as part of its decision-making process. (The commenter asserted that advanced combustion controls, rather than SCR, properly represent BART for FCPP.) Thus, the commenter stated that as the Nation's trustee and ''stand-in'' for the BART determination for FCPP, the EPA should not select a more stringent BART than the commenter stated is required by the Regional Haze Rule to achieve ''reasonable progress'' where doing so would likely have substantial adverse impacts on the Navajo Nation.

The commenter also stated that EPA has a duty to undertake government-to-government consultations with the Navajo Nation, and that EPA must coordinate with the Navajo Nation in its relationship with, and reliance on, other federal agencies. The commenter pointed out that EPA relies on data provided by the NPS, another federal trustee of the Nation, but has not coordinated consultation between NPS and the Navajo Nation on this rulemaking. The commenter indicated that the May 2011 EPA Tribal Policy recognizes that such coordination is required under Executive Order 13175 and asserted that EPA should coordinate consultation with the U.S. Forest Service (who provided data used in the proposed rulemaking) as well as various Department of the Interior (DOI) agencies that have an interest in this rulemaking, including NPS, the Bureau of Indian Affairs, the U.S. Fish and Wildlife Service, the Office of Surface Mining Reclamation and Enforcement, and potentially the Bureaus of Land Management and Reclamation. The commenter added that consultation with Department of Energy (DOE) may be important in regard to including FCPP in a study that DOE is proposing to carry out for NGS, which also is located on the Navajo reservation and uses Navajo coal.

Response: It is EPA's policy (EPA Policy on Consultation and Coordination with Indian Tribes, May 4, 2011, (EPA Tribal Consultation Policy))[43] to consult on a government-to-government basis with federally recognized tribal governments when EPA actions and decisions may affect tribal interests. Consultation is a process of meaningful communication and coordination between EPA and tribal officials prior to EPA taking actions or implementing decisions that may affect tribes. One of the primary goals of the EPA Tribal Policy is to fully implement both Executive Order 13175 and the 1984 Indian Policy, with the ultimate

[41] Please see *http://www.epa.gov/region09/air/maps/maps_top.html* for EPA Region IX air quality designations.

[42] To support this assertion, the commenter cited Executive Order 13175 (65 FR 67249, November 6, 2000; *EPA Policy on Consultation and Coordination With Indian Tribes,* section IV ''Guiding Principles,'' May 4, 2011 (EPA Tribal Policy); and the 1984 EPA Indian Policy.

[43] See ''EPA Policy on Consultation and Coordination with Indian Tribes'', May 4, 2011, in the docket for this final rulemaking.

goal of assuring tribal concerns and interests are considered whenever EPA's actions may affect tribes by strengthening the consultation, coordination, and partnership between tribal governments and EPA.

For this action, EPA consulted with Navajo Nation in accordance with the Executive Order and EPA's Indian Policies on numerous occasions. A record of all consultations with tribes is included in the Docket for this final rulemaking.[44] As stated in the 2011 EPA Tribal Consultation Policy, as a process, consultation includes several methods of interaction that may occur at different levels.[45] EPA consulted with the Navajo Nation at various times throughout the process at various levels of government, including in-person meetings with the President of the Navajo Nation on May 19, 2011, and June 13, 2012.

EPA acknowledges the significant interest of the Navajo Nation in FCPP. Based on the results from the original analysis for the proposed BART determination, EPA concluded that the installation and operation of SCR on all five units at FCPP would not adversely affect the competitiveness of FCPP's cost to generate electricity compared to the cost to purchase electricity on the open market. Thus, EPA infers that a BART determination requiring SCR on all five units, in itself, should not force the closure of FCPP. EPA notes that we do not expect adverse impacts to the Navajo Nation if FCPP continues operating all units and complies with BART. However, potential adverse impacts to the Navajo Nation may result if the owners of FCPP choose to implement the optional BART Alternative. At the request of the Navajo Nation during consultation, EPA commissioned a study to examine potential adverse impacts to Navajo Nation from the BART Alternative. The results of this analysis were discussed with President Shelly during a consultation meeting on July 13, 2012 and will be provided to President Shelly by letter as a follow-up to our consultation.

EPA agrees that we are acting to implement the BART requirements for a facility located on the Navajo Reservation in circumstances in which the Tribe has not applied, or been approved, to administer the applicable CAA program. EPA is mindful of the Navajo Nation's views and recommendations, particularly where there is a potential substantial adverse economic impact to the Navajo Nation. We disagree however that the Agency must ''defer to tribal views when making environmental policy decisions''. EPA is carrying out the requirements of the CAA and the Regional Haze Rule pursuant to our authority to implement these requirements in the absence of an EPA-approved program. EPA notes that the CAA and the TAR provide mechanisms for eligible Indian tribes to seek approval of tribal programs should they wish to administer CAA requirements.

For this action EPA carefully considered the unique location of FCPP with respect to proximate Class I areas as well as its economic importance to Navajo Nation. We conducted a detailed analysis of available emission control technologies against the five-factors specified in the BART Guidelines. EPA also conducted extensive air modeling (included in the Supplemental Proposal). Additionally, we have considered the numerous comments we received on our proposals. In making our final decision we have had to balance the findings of our analysis along with the interests of various stakeholders, our unique government-to-government relationship with tribes, and our responsibility to carry out the requirements of the CAA and Regional Haze Rule to achieve reasonable progress towards visibility improvements.

This final FIP strikes a reasonable balance between reducing emissions to improve visibility while allowing for the facility to implement those reductions in a manner that is consistent with its continued operation and economic viability.

EPA has received information and comments from numerous federal agencies for this rulemaking and considered these in our final decision (all information and comments are included in the docket). EPA plans to coordinate with the Department of Interior or other federal agencies, as appropriate, in any future tribal consultations related to BART for FCPP or the Navajo Generating Station, the other coal-fired power plant located in Navajo Nation.

EPA acknowledges that the Department of Interior has contracted with the National Renewable Energy Lab (NREL) of the Department of Energy to examine renewable energy options for the Navajo Generating Station, which is also located on the Navajo Nation and uses coal from the Kayenta Mine, located on Navajo and Hopi land. Information on the NREL study is available from DOI[46] and will be included in the docket for EPA's upcoming proposed rulemaking for NGS.

Comment: One public interest advocacy group, the Navajo Nation, and one environmental advocacy group supported establishment of a 20 percent opacity limit for material handling. The public interest advocacy group stated that the FCPP site is subject to numerous dust-storm events originating in northwestern Arizona, and the additional fugitive dust that could be picked up by these strong winds at the FCPP property added to the incoming dust from the west makes breathing and outdoor activity miserable on from 4 to 12 days per year for residents of Montezuma County, CO and San Juan County, NM.

One of the owners of FCPP noted that in addition to the proposed BART requirements, EPA proposed separate fugitive dust control requirements and a 20 percent opacity limitation for certain material handling operations, which are unrelated to the CAA visibility program. The commenter laid out the history of EPA's past attempt to apply fugitive dust controls to FCPP. The commenter argued that the proposed requirements are arbitrary and should not be finalized because the facts upon which EPA relies are inadequate to support the conclusion that fugitive dust control requirements are ''necessary or appropriate'' to protect air quality at FCPP.

Response: EPA acknowledges support for establishing a 20 percent opacity limit for material handling and a Dust Control Plan at FCPP. EPA has finalized both these requirements. EPA notes that the Dust Control Plan shall include a description of the dust suppression methods for controlling dust from site activities including coal handling and storage facilities, ash handling, storage, and landfills, and road sweeping activities. The 20 percent opacity standard will apply to any crusher, grinding mill, screening operation, belt conveyor, or truck loading or unloading operation.

EPA agrees with the commenter that the fugitive dust and 20 percent opacity limit are unrelated to the CAA visibility program. EPA also agrees with the history laid out by the commenter on fugitive dust controls at FCPP. EPA included these dust control requirements in the previous FIP finalized in 2007 because EPA considered them necessary or appropriate under the TAR to assure that dust from this facility does not

[44] See document ''Timeline of all Tribal Consultations on BART.docx'' in the docket for this final rulemaking.

[45] See ''EPA Policy on Consultation and Coordination with Indian Tribes'', May 4, 2011, in the docket for this final rulemaking.

[46] *http://www.doi.gov/navajo-gss/index.cfm.*

contribute to possible violations of the NAAQS for PM_{10}. The commenter is correct that EPA withdrew the 2007 FIP requirements on dust when APS appealed the rule. EPA had not adequately documented in the record for the 2007 FIP our basis for establishing the 20 percent opacity regulation. For the 2007 FIP, EPA chose not to defend our position based on the record for that rulemaking and instead chose to address the issue in a subsequent FIP action, such as this one.

EPA disagrees with the commenter that the fugitive dust and opacity requirements are arbitrary or that our argument is inadequate to support our conclusion that fugitive dust control requirements are necessary or appropriate to protect air quality at FCPP.[47]

EPA's basis for finding that it is necessary or appropriate for FCPP to comply with a requirement to limit its material handling emissions to 20 percent or less is being set forth in this rulemaking. FCPP receives approximately 10 million tons of coal per year for combusting in Units 1–5. This massive quantity of coal moves by conveyor belt across FCPP's property line through numerous transfer points before the coal is loaded into the storage silos that feed the individual combustion units. Each of these transfer points along with the conveyor belts has the potential for PM emissions. The PM can be minimized through the use of collection devices or dust suppression techniques such as covered conveyors or spraying devices at the transfer points. EPA first promulgated dust control requirements for new coal handling equipment on January 15, 1976 (41 FR 2232). This rule affected equipment constructed or modified after the 1970s that affected facilities built or modified after October 24, 1974. The purpose of these New Source Performance Standards (NSPS) was:

> NSPS implement CAA section 111(b) and are issued for categories of sources which have been identified as causing, or contributing significantly to, air pollution which may reasonably be anticipated to endanger public health or welfare. The primary purpose of the NSPS are to help States attain and maintain ambient air quality by ensuring that the best demonstrated emission control technologies are installed as the industrial infrastructure is modernized.

See 74 FR 51951 (October 8, 2009).

EPA's basis for finding that it is necessary or appropriate for FCPP to comply with a requirement to limit its material handling emissions to 20 percent or less is being set forth in this rulemaking. EPA has promulgated a 20 percent opacity limit for all new coal handling operations built after the mid 1970s in the New Source Performance Standards. This NSPS standard applied to any coal handling equipment processing more than 200 tons per day of coal. Because FCPP receives approximately 10 million tons of coal per year for combusting in Units 1–5, it may be processing more than 27,000 tons per day. This is more than 100 times the smallest size coal handling operation subject to the NSPS, and which EPA considered necessary for protecting public health and welfare. As mentioned before, FCPP's massive quantity of coal moves by conveyor belt across FCPP's property line, passing through numerous transfer points before the coal is loaded into the storage silos that feed the individual pulverizers and combustion units. Each of these transfer points along with the conveyor belts has the potential for PM emissions. The PM can be minimized by collection devices or dust suppression techniques such as covered conveyors or spraying devices at the transfer points.

FCPP and the BHP Navajo Mine that provides FCPP's coal are within close proximity to Morgan Lake which is a recreational lake with public access just beyond the FCPP's property line. Excess dust can blow over the FCPP property line to Morgan Lake and adjacent properties. EPA and Navajo Nation EPA receive numerous complaints from Navajo Tribal members concerning excess dust emissions generated from the ash landfill FCPP maintains, as well as from the other material handling and storage operations.

EPA concludes that it is necessary or appropriate to set enforceable fugitive dust/PM suppression measures to protect ambient air quality because (1) there is a large potential for dust emissions from the facility coal and ash operations to be emitted and blow across the property line, (2) EPA and Navajo Nation EPA have received numerous complaints concerning excess dust from the ash landfill and other operations, and (3) these activities are occurring in close proximity to a public access area.

EPA disagrees with the commenter that the 20 percent opacity limit is arbitrary and capricious. While EPA acknowledges that New Mexico does not have a general opacity limit that applies to dust, the other three Four Corners States do. In Arizona and Colorado a general 20 percent opacity limit applies at all facilities including ''grandfathered'' coal-fired EGUs. In Utah the general opacity limit for facilities built before the CAA in 1971 is a 40 percent opacity limit. However, all of Utah's large coal-fired EGUs were constructed after 1971 and are subject to a 20 percent general opacity limit, i.e., the NSPS. Therefore, if FCPP had been built a few years later or a few miles in a different direction, it would be subject to the NSPS or a SIP provision limiting its coal material handling and storage operations to 20 percent opacity.

Because FCPP is located on the Navajo Nation where generally applicable limits that often are included in SIPs do not exist and because it was constructed nearly 40 years ago, and because dust control measures at coal-fired power plants are important for maintaining the PM_{10} NAAQS in the areas adjacent to the power plant properties, EPA finds that it is necessary or appropriate to impose measures to limit the amount of PM emissions from these material handling and storage emission sources. EPA recently imposed similar dust control requirements at the Navajo Generating Station, which is also on the Navajo Nation. 75 FR 10174.

Comment: One environmental advocacy group stated that the EPA must consult in accordance with sections 7(a)(1) and 7(a)(2) of the Endangered Species Act (ESA) with regards to the proposed FIP because of the impacts of FCPP on threatened and endangered fish, wildlife, and plants and their designated critical habitats, which the commenter discussed at some length. The commenter added that EPA has discretion under the TAR to limit emissions of mercury, selenium, and other pollutants that may adversely affect the razorback sucker and Colorado pikeminnow, and these species' critical habitats. According to the commenter, this discretion is part of what triggers the Agency's obligation to consult pursuant to sections 7(a)(1) and 7(a)(2) of the ESA.

Response: EPA disagrees with the commenter that determining BART and promulgating this FIP for FCPP necessitates ESA Section 7 consultation. EPA understands that the U.S. Fish and Wildlife Service (FWS) is primarily concerned about the effects of mercury and selenium on endangered fish species in the San Juan River. EPA notes that under the BART Alternative, mercury and selenium emissions will be reduced from FCPP due to the closure of Units 1–3. Additionally, EPA's national MATS rule set new emission limits for mercury that would apply to Units 1–3 at FCPP if those units continue operation. EPA further notes that the goal of the Regional Haze Rule is to reduce emissions of visibility-

[47] For example, see document titled ''Four Corners Power Plant Complaint to MSHA'' in the docket for this final rulemaking.

impairing pollutants in order to restore visibility to natural conditions at the mandatory Federal Class I areas, and mercury and selenium do not affect visibility. Therefore, EPA does not have authority to regulate emissions of mercury or selenium under BART.

Comment: The coal supplier for FCCP questioned the legality of EPA's approach to the Regional Haze program at FCPP. According to the commenter, EPA's BART and better-than-BART proposals are not authorized because BART is not ''reasonably separable'' from the remainder of a regional haze implementation plan for the Navajo Nation under the TAR. The commenter concluded that the minimum amount of reasonable progress that BART needs to achieve in a given Class I area cannot be determined until the amount of reasonable progress achieved by other CAA and state programs is subtracted from that area's reasonable progress goal. The commenter asserted that the NO_X emission reductions that would be achieved under the supplemental proposal are in excess of the amount required to achieve the reasonable progress goals in the area.

The commenter added that EPA must consider the reasonable progress already achieved by past FCPP emission reductions. The commenter concluded that any necessary reasonable progress remaining to be achieved by NO_X BART at FCPP cannot be determined until the reasonable progress achieved by prior emissions reductions at FCPP is considered.

The commenter stated that EPA's BART determination did not properly weigh the statutory factors. Specifically, the commenter indicated that individual Class I area visibility improvements from SCR have not been compared with respect to the statutory factors to visibility improvements from LNB, and the actual amounts of those improvements have not been measured against the amounts of improvements needed to meet reasonable progress goals.

Response: EPA disagrees with the commenter who questioned the legality of our approach and that stated that EPA's BART and ''better-than-BART'' proposals are not authorized because BART is not ''reasonably separable'' from the remainder of a regional haze implementation plan for the Navajo Nation under the TAR. We also disagree that our approach to the Regional Haze program impermissibly isolates BART from the context of the overall reasonable progress goal in violation of the CAA, and that our proposed BART for FCPP should be withdrawn.

EPA's authority to promulgate a source-specific FIP in Indian County is based on CAA sections 301(a) and (d)(4) and section 49.11 of the TAR provides EPA with broad discretion to promulgate regulations directly for sources located in Indian country, including on Indian reservations if we determine such Federal regulations are ''necessary or appropriate'' and the Tribe has not promulgated a TIP. Specifically, in 40 CFR 49.11, EPA interpreted CAA section 301(d)(4) to authorize EPA to promulgate ''such Federal implementation plan provisions as are necessary or appropriate to protect air quality''. As such, because the Navajo Nation has not adopted a TIP for Regional Haze, the TAR provides discretion to EPA to determine which requirements of the Regional Haze Rule are necessary or appropriate to protect air quality, and to promulgate just those implementation plan provisions accordingly. Because two stationary sources on the Navajo Nation meet the BART eligibility criteria, EPA has determined that it is necessary or appropriate at this time to evaluate source-specific FIPs to implement the BART requirement of the RHR for each BART-eligible facility located on the Navajo Nation. The basis for our determination is discussed in several prior responses (See, *e.g.,* Sections 2.1, 4.1.2, and 8.1). The Courts have agreed with EPA that it may implement requirements that are necessary or appropriate without providing for all aspects of the CAA programs at a single time. See Arizona Public Service v. EPA, 562 F.3d 1116 (10th Cir. 2009).

EPA disagrees with the comment that BART must be established in relation to reasonable progress goals. State or Tribal Implementation Plans for Regional Haze must establish goals that provide for reasonable progress towards achieving natural visibility conditions for each mandatory Class I Federal area located within its borders (40 CFR 51.308(d)(1). FCPP and NGS are both located within the Navajo Nation Indian Reservation, and for the reasons outlined above, EPA is conducting BART determinations for each facility. There are no mandatory Class I Federal areas as designated by Congress located within the Navajo Nation.[48] EPA further notes that the five-factor analysis outlined in the BART Guidelines, which were promulgated as a notice and comment rulemaking, does not require consideration of reasonable progress goals in determining BART for a given facility.

EPA also disagrees that the minimum amount of reasonable progress that BART needs to achieve in a given Class I area cannot be determined until the amount of reasonable progress achieved by other CAA and state programs is subtracted from that area's reasonable progress goal. Neither the CAA nor Regional Haze regulations set any quantitative presumptive targets for the amount of reasonable progress that must be achieved. Rather, the regulations allow for flexibility in determining the amount of reasonable progress towards the ultimate goal of returning to natural background conditions.

EPA disagrees with the commenter that EPA must consider the reasonable progress already achieved by past FCPP emission reductions and that previously uncontrolled SO_2, NO_X, and PM emission rates prior to previous FIPs for FCPP should serve as the baseline for measuring visibility improvements. In its own five-factor BART analysis, APS used actual NO_X emissions from 2001–2003 as baseline emissions for determining visibility improvement from NO_X controls. NO_X emissions from 2001–2003 were generally consistent with and representative of NO_X emissions over the past ten years. EPA agrees with APS in its use of actual emissions over a recent time frame, rather than attempting to rely on previously uncontrolled emissions emission rates from FCPP as a baseline.

Additionally, nothing in the BART regulations or guidance requires that EPA consider past emission reductions in determining BART under the RHR. However, as part of the required five-factor analysis for BART EPA did evaluate and consider the current pollution control equipment in use at FCPP.

EPA disagrees with the comment that EPA's BART determination did not properly weigh the statutory factors. As discussed elsewhere in this document, the BART Guidelines allow the reviewing authority (State, Tribe, or EPA) the discretion to determine how to weigh and in what order to evaluate the statutory factors (cost of compliance, the energy and non air quality environmental impacts of compliance, any existing pollution control technology in use at the source, the remaining useful life of the source, and the degree of improvement in visibility which may reasonably be anticipated to result from the use of such technology), as long as the reviewing authority justifies its selection of the ''best'' level of control and explains the CAA factors

[48] EPA notes that Navajo Nation has established its own parks and monuments, including Monument Valley, Canyon de Chelly, and the Four Corners Monument, however, these parks are not mandatory Class I Federal Areas as set by Congress.

that led the reviewing authority to choose that option over other control levels (see 70 FR 39170, July 6, 2005). EPA provided a detailed justification for our BART evaluation process and five-factor analysis in the TSD for our proposed BART determination.

EPA also disagrees with the comment that individual Class I area visibility improvements from SCR have not been compared with respect to the statutory factors to visibility improvements from LNB. In the preamble to our October 19, 2010, proposed BART determination and in the accompanying TSD, EPA compared the anticipated visibility improvement from SCR with the anticipated improvement from combustion controls (LNB or LNB+OFA) (See 75 FR 64230, Table 3, and TSD Tables 36–39), and noted that EPA modeled the visibility improvement from SCR to far exceed the modeled improvement from combustion controls.

IV: Administrative Requirements

A. Executive Order 12866: Regulatory Planning and Review and Executive Order 13563: Improving Regulation and Regulatory Review

This action will finalize a source-specific FIP for a single generating source. This type of action is exempt from review under Executive Orders 12866 (58 FR 51735, October 4, 1993) and 13563 (76 FR 3821, January 21, 2011).

B. Paperwork Reduction Act

This action does not impose an information collection burden under the provisions of the Paperwork Reduction Act, 44 U.S.C. 3501 *et seq.* Under the Paperwork Reduction Act, a ''collection of information'' is defined as a requirement for ''answers to * * * identical reporting or recordkeeping requirements imposed on ten or more persons * * *'' 44 U.S.C. 3502(3)(A). Because the final FIP applies to a single facility, Four Corners Power Plant, the Paperwork Reduction Act does not apply. *See* 5 CFR 1320(c).

Burden means the total time, effort, or financial resources expended by persons to generate, maintain, retain, or disclose or provide information to or for a Federal agency. This includes the time needed to review instructions; develop, acquire, install, and utilize technology and systems for the purposes of collecting, validating, and verifying information, processing and maintaining information, and disclosing and providing information; adjust the existing ways to comply with any previously applicable instructions and requirements; train personnel to be able to respond to a collection of information; search data sources; complete and review the collection of information; and transmit or otherwise disclose the information.

An agency may not conduct or sponsor, and a person is not required to respond to a collection of information unless it displays a currently valid OMB control number. The OMB control numbers for EPA's regulations in 40 CFR are listed in 40 CFR Part 9.

C. Regulatory Flexibility Act

The Regulatory Flexibility Act (RFA) generally requires an agency to prepare a regulatory flexibility analysis of any rule subject to notice and comment rulemaking requirements under the Administrative Procedure Act or any other statute unless the agency certifies that the rule will not have a significant economic impact on a substantial number of small entities. Small entities include small businesses, small organizations, and small governmental jurisdictions.

For purposes of assessing the impacts of today's rule on small entities, small entity is defined as: (1) A small business as defined by the Small Business Administration's (SBA) regulations at 13 CFR 121.201; (2) a small governmental jurisdiction that is a government of a city, county, town, school district or special district with a population of less than 50,000; and (3) a small organization that is any not-for-profit enterprise which is independently owned and operated and is not dominant in its field.

After considering the economic impacts of this action on small entities, I certify that this final action will not have a significant economic impact on a substantial number of small entities. The Four Corners Power Plant is not a small entity and the FIP for Four Corners Power Plant being finalized today does not impose any compliance requirements on small entities. *See Mid-Tex Electric Cooperative, Inc.* v. *FERC,* 773 F.2d 327 (D.C. Cir. 1985).

D. Unfunded Mandates Reform Act (UMRA)

This rule will impose an enforceable duty on the private sector owners of FCPP. However, this rule does not contain a Federal mandate that may result in expenditures of $100 million (in 1996 dollars) or more for State, local, and tribal governments, in the aggregate, or the private sector in any one year. EPA's estimate for the total annual cost to install and operate SCR on all five units at FCPP does not exceed $100 million (in 1996 dollars) in any one year. Thus, this rule is not subject to the requirements of sections 202 or 205 of UMRA. This action is also not subject to the requirements of section 203 of UMRA because it contains no regulatory requirements that might significantly or uniquely affect small governments. This rule will not impose direct compliance costs on the Navajo Nation, and will not preempt Navajo law. This final action will reduce the emissions of two pollutants from a single source, the Four Corners Power Plant.

E. Executive Order 13132: Federalism

This action does not have federalism implications. It will not have substantial direct effects on the States, on the relationship between the national government and the States, or in the distribution of power and responsibilities among the various levels of government, as specified in Executive Order 13132. This final action requires emission reductions of NO_X at a specific stationary source located in Indian country. Thus, Executive Order 13132 does not apply to this action.

F. Executive Order 13175: Consultation and Coordination With Indian Tribal Governments

Subject to the Executive Order 13175 (65 FR 67249, November 9, 2000) EPA may not issue a regulation that has tribal implications, that imposes substantial direct compliance costs, and that is not required by statute, unless the Federal government provides the funds necessary to pay the direct compliance costs incurred by tribal governments, or EPA consults with tribal officials early in the process of developing the proposed regulation and develops a tribal summary impact statement.

EPA has concluded that this action will have tribal implications. However, it will neither impose substantial direct compliance costs on tribal governments, nor preempt Tribal law. This final rule requires FCPP, a major stationary source located on the Navajo Nation, to reduce emissions of NO_X under the BART requirement of the Regional Haze Rule. The owners of FCPP submitted a BART Alternative to EPA for consideration that would provide compliance flexibility to the owners and result in greater reasonable progress than BART toward the national visibility goal. This BART Alternative involves closure of Units 1–3 at FCPP and installation of add-on pollution controls to Units 4 and 5. EPA issued a Supplemental Proposal to allow the owners of FCPP the option to implement BART or the BART Alternative. Because the BART Alternative involves the optional closure of Units 1–3 and an associated

decline in the amount of coal mined and combusted, taxes and royalties paid to the Navajo Nation by the owners of FCPP and BHP Billiton, operator of the coal mine that supplies FCPP, are expected to decline. The closure of Units 1–3 is not expected to result in layoffs, but is expected to result in a reduction in workforce at the mine and power plant over time through attrition.

EPA consulted with tribal officials early in the process of developing this regulation to permit them to have meaningful and timely input into its development. EPA proposed to determine that it was necessary or appropriate to implement the BART requirement of the Regional Haze Rule for the Navajo Nation to protect air quality and improve visibility at the sixteen mandatory Class I Federal areas surrounding FCPP and the eleven Class I areas surrounding NGS. EPA first put forth an Advanced Notice of Proposed Rulemaking (ANPR) on August 28, 2009 to accept comment on preliminary information provided by FCPP and NGS and to begin the consultation process with affected tribes and the Federal Land Managers. EPA has consulted on numerous occasions with officials of the Navajo Nation in the process of developing this FIP, including meetings with the President Ben Shelly of the Navajo Nation and his staff on May 19, 2011, after the close of the public comment period for our proposed BART determination and Supplemental Proposal, and on June 13, 2012, prior to our final action. The agendas for these two consultation meetings are provided in the docket for this final rulemaking.[49] A timeline of correspondence and consultation with tribes on both power plants is included in the docket for this final rulemaking.

Several tribes, including the Navajo Nation, submitted comments on the ANPR, which we considered in developing our proposal and the accompanying Technical Support Document. The main concern expressed by the Navajo Nation was that requiring the top NO_X control option, selective catalytic reduction (SCR) as BART would cause FCPP to close. In developing our proposed BART determination, EPA conducted an analysis to examine whether requiring SCR on Units 1–5 at FCPP would cause electricity generation costs to exceed the cost to purchase power on the wholesale market. Based on our analysis, we determined that electricity generation costs resulting from installation of SCR would not make FCPP uneconomical compared to the wholesale power market; therefore, we concluded that our proposed BART determination was unlikely to cause FCPP to close.

The Navajo Nation provided comments on our proposed rule and Supplemental Proposal, in consultation and by letter, which EPA considered in developing this final rule. The Navajo Nation also expressed concern about the potential adverse impacts of the BART Alternative to the Navajo Nation and requested that EPA conduct an analysis to estimate potential adverse impacts to the Navajo Nation. Pursuant to EPA's customary practice of engaging in extensive and meaningful consultation with tribes and tribal authorities with regard to relevant Agency actions, EPA commissioned an analysis of the optional BART Alternative to estimate potential adverse impacts to the Navajo Nation if the owners of FCPP chose to retire Units 1–3. EPA communicated these potential impacts to the Navajo Nation in our consultation meeting with President Shelly on June 13, 2012. The report will be provided to President Shelly by letter as a follow-up to our consultation with the Navajo Nation.

The Navajo Nation also expressed support for phased-implementation of controls to provide compliance flexibility to FCPP. The final rule allows the owners of FCPP to choose between BART or the BART Alternative and provides timeframes for phased-implementation of control options.

EPA summarized and responded to comments from the Navajo Nation and the Salt River Pima Maricopa Indian Community received on the ANPR in the Technical Support Document for our proposed rulemaking. Following our meeting with President Shelly on May 19, 2011, EPA sent a follow up letter summarizing and responding to the concerns expressed by the Navajo Nation.[50] In coordination with this final rulemaking, EPA will also be sending a letter to President Shelly that summarizes and responds to the comments raised in his letter to EPA dated June 2, 2011.

G. Executive Order 13045: Protection of Children From Environmental Health Risks and Safety Risks

Executive Order 13045: *Protection of Children From Environmental Health Risks and Safety Risks* (62 FR 19885, April 23, 1997), applies to any rule that: (1) Is determined to be economically significant as defined under Executive Order 12866, and (2) concerns an environmental health or safety risk that EPA has reason to believe may have a disproportionate effect on children. If the regulatory action meets both criteria, the Agency must evaluate the environmental health or safety effects of the planned rule on children, and explain why the planned regulation is preferable to other potentially effective and reasonably feasible alternatives considered by the Agency.

This rule is not subject to Executive Order 13045 because it requires emissions reductions of NO_X from a single stationary source. Because this action only applies to a single source and is not a rule of general applicability, it is not economically significant as defined under Executive Order 12866, and does not have a disproportionate effect on children. However, to the extent that the rule will reduce emissions of NO_X, which contributes to ozone formation, the rule will have a beneficial effect on children's health by reducing air pollution that causes or exacerbates childhood asthma and other respiratory issues.

H. Executive Order 13211: Actions Concerning Regulations That Significantly Affect Energy Supply, Distribution, or Use

This action is not subject to Executive Order 13211 (66 FR 28355 (May 22, 2001)), because it is not a significant regulatory action under Executive Order 12866.

I. National Technology Transfer and Advancement Act

Section 12(d) of the National Technology Transfer and Advancement Act of 1995 (NTTAA), Public Law 104–113, 12 (10) (15 U.S.C. 272 note) directs EPA to use voluntary consensus standards (VCS) in its regulatory activities unless to do so would be inconsistent with applicable law or otherwise impractical. VCS are technical standards (*e.g.,* materials specifications, test methods, sampling procedures and business practices) that are developed or adopted by the VCS bodies. The NTTAA directs EPA to provide Congress, through annual reports to OMB, with explanations when the Agency decides not to use available and applicable VCS.

Consistent with the NTTAA, the Agency conducted a search to identify potentially applicable VCS. For the measurements listed below, there are a number of VCS that appear to have possible use in lieu of the EPA test

[49] See document number 0222 in docket EPA–R09–OAR–2011–0683 titled ''Agenda May 19, 2011 Meeting; Gov to Gov Consultation with Navajo Nation'', and document titled: ''2012_0613 Consultation with Navajo Nation agenda and attendees.pdf'' in the docket for this final rulemaking.

[50] See document 0231 in docket EPA–R09–OAR–2011–0683 titled ''EPA response to Navajo Nation dated 09/06/2011''.

methods and performance specifications (40 CFR part 60, Appendices A and B) noted next to the measurement requirements. It would not be practical to specify these standards in the current rulemaking due to a lack of sufficient data on equivalency and validation and because some are still under development. However, EPA's Office of Air Quality Planning and Standards is in the process of reviewing all available VCS for incorporation by reference into the test methods and performance specifications of 40 CFR part 60, Appendices A and B. Any VCS so incorporated in a specified test method or performance specification would then be available for use in determining the emissions from this facility. This will be an ongoing process designed to incorporate suitable VCS as they become available.

Particulate Matter Emissions—EPA Methods 1 though 5;

Opacity—EPA Method 9 and Performance Specification Test 1 for Opacity Monitoring;

NO_X Emissions—Continuous Emissions Monitors.

J. Executive Order 12898: Federal Actions To Address Environmental Justice in Minority Populations and Low-Income Populations

Executive Order 12898 (59 FR 7629, February 16, 1994), establishes federal executive policy on environmental justice. Its main provision directs federal agencies, to the greatest extent practicable and permitted by law, to make environmental justice part of their mission by identifying and addressing, as appropriate, disproportionately high and adverse human health or environmental effects of their programs, policies, and activities on minority populations and low-income populations in the United States.

EPA has determined that this final rule will not have disproportionately high and adverse human health or environmental effects on minority or low-income populations because it increases the level of environmental protection for all affected populations without having any disproportionately high and adverse human health or environmental effects on any population, including any minority or low-income population. This rule requires emissions reductions of two pollutants from a single stationary source, Four Corners Power Plant.

K. Congressional Review Act

The Congressional Review Act, 5 U.S.C 801 *et seq.,* as added by the Small Business Regulatory Enforcement Fairness Act of 1996, generally provides that before a rule may take effect, the agency promulgating the rule must submit a rule report, which includes a copy of the rule, to each House of the Congress and to the Comptroller General of the United States. Section 804 exempts from section 801 the following types of rules (1) rules of particular applicability; (2) rules relating to agency management or personnel; and (3) rules of agency organization, procedure, or practice that do not substantially affect the rights or obligations of non-agency parties. 5 U.S.C 804(3). EPA is not required to submit a rule report regarding today's action under section 801 because this action is a rule of particular applicability. This rule finalizes a source-specific FIP for a single generating source.

L. Petitions for Judicial Review

Under section 307(b)(1) of the Clean Air Act, petitions for judicial review of this action must be filed in the United States Court of Appeals for the appropriate circuit by October 23, 2012. Filing a petition for reconsideration by the Administrator of this final rule does not affect the finality of this rule for the purposes of judicial review nor does it extend the time within which a petition for judicial review may be filed, and shall not postpone the effectiveness of such rule or action. This action may not be challenged later in proceedings to enforce its requirements. (See CAA section 307(b)(2).)

List of Subjects in 40 CFR Part 49

Environmental protection, Administrative practice and procedure, Air pollution control, Indians, Intergovernmental relations, Reporting and recordkeeping requirements.

Dated: August 6, 2012.

Lisa P. Jackson,

Administrator.

Title 40, chapter I, of the Code of Federal Regulations is amended as follows:

PART 49—[AMENDED]

■ 1. The authority citation for part 49 continues to read as follows:

Authority: 42 U.S.C. 7401, *et seq.*

■ 2. Section 49.5512 is amended by adding paragraphs (i) and (j) to read as follows:

§ 49.5512 Federal Implementation Plan Provisions for Four Corners Power Plant, Navajo Nation.

* * * * *

(i) Regional Haze Best Available Retrofit Technology limits for this plant are in addition to the requirements of paragraphs (a) through (h) of this section. All definitions and testing and monitoring methods of this section apply to the limits in this paragraph (i) except as indicated in paragraphs (i)(1) through (4) of this section. The interim NO_X emission limit in paragraph (i)(2)(ii) of this section shall be effective 180 days after re-start of the unit after installation of add-on post-combustion NO_X controls for that unit and until the plant-wide limit goes into effect. The plant-wide NO_X limit shall be effective no later than 5 years after October 23, 2012. The owner or operator may elect to meet the plant-wide limit early to remove the individual unit limits. Particulate limits for Units 4 and 5 shall be effective 60 days after restart following the scheduled major outage for Units 4 and 5 in 2013 and 2014.

(1) Particulate Matter from Units 4 and 5 shall be limited to 0.015 lb/MMBtu for each unit as measured by the average of three test runs with each run collecting a minimum of 60 dscf of sample gas and with a duration of at least 120 minutes. Sampling shall be performed according to 40 CFR Part 60 Appendices A–1 through A–3, Methods 1 through 4 and Method 5 or Method 5e. The averaging time for any other demonstration of the particulate matter compliance or exceedance shall be based on a 6-hour average. Particulate testing shall be performed annually as required by paragraph (e)(3) of this section. This test with 120 minute test runs may be substituted and used to demonstrate compliance with the particulate limits in paragraph (d)(2) of this section.

(2) Plant-wide nitrogen oxide emission limits.

(i) The plant-wide nitrogen oxide limit, expressed as nitrogen dioxide (NO_2), shall be 0.11 lb/MMBtu as averaged over a rolling 30-calendar day period. NO_X emissions for each calendar day shall be determined by summing the hourly emissions measured as pounds of NO_2 for all operating units. Heat input for each calendar day shall be determined by adding together all hourly heat inputs, in millions of Btu, for all operating units. Each day the rolling 30-calendar day average shall be determined by adding together that day's and the preceding 29 days' pounds of NO_2 and dividing that total pounds of NO_2 by the sum of the heat input during the same 30-day period. The results shall be the rolling 30-calendar day-average pound per million Btu emissions of NO_X.

(ii) The interim NO_X limit for the first 750 MW boiler retrofitted with add-on post-combustion NO_X control shall be 0.11 lb/MMBtu, based on a rolling

average of 30 successive boiler operating days.

(iii) Schedule for add-on post-combustion NO_X controls installation

(A) Within 4 years of the effective date of this rule, FCPP shall have installed add-on post-combustion NO_X controls on at least 750 MW (net) of generation to meet the interim emission limit in paragraph (i)(2)(ii)(A) of this section.

(B) Within 5 years of the effective date of this rule, FCPP shall have installed add-on post-combustion NO_X controls on all 2060 MW (net) of generation to meet the plant-wide emission limit for NO_X in paragraph (i)(2)(i) of this section.

(iv) Testing and monitoring shall use the 40 CFR part 75 monitors and meet the 40 CFR part 75 quality assurance requirements. In addition to these 40 CFR part 75 requirements, relative accuracy test audits shall be performed for both the NO_X pounds per hour measurement and the heat input measurement. These shall have relative accuracies of less than 20 percent. This testing shall be evaluated each time the 40 CFR part 75 monitors undergo relative accuracy testing.

(v) If a valid NO_X pounds per hour or heat input is not available for any hour for a unit, that heat input and NO_X pounds per hour shall not be used in the calculation of the 30 day plant-wide rolling average.

(vi) Upon the effective date of the plant-wide NO_X average, the owner or operator shall have installed CEMS and COMS software that complies with the requirements of this section.

(3) In lieu of meeting the NO_X requirements of paragraph (i)(2) of this section, FCPP may choose to permanently shut down Units 1, 2, and 3 by January 1, 2014 and meet the requirements of this paragraph to control NO_X emissions from Units 4 and 5. By July 31, 2018, Units 4 and 5 shall be retrofitted with add-on post-combustion NO_X controls to reduce NO_X emissions. Units 4 and 5 shall each meet a 0.098 lb/MMBtu emission limit for NO_X expressed as NO_2 based on a rolling average of 30 successive boiler operating days. A ''boiler operating day'' is defined as any 24-hour period between 12:00 midnight and the following midnight during which any fuel is combusted at any time at the steam generating unit. Emissions from each unit shall be measured with the 40 CFR part 75 continuous NO_X monitor system and expressed in the units of lb/MMBtu and recorded each hour. A valid hour of NO_X data shall be determined per 40 CFR part 75. For each boiler operating day, every valid hour of NO_X lb/MMBtu measurement shall be averaged to determine a daily average. Each daily average shall be averaged with the preceding 29 valid daily averages to determine the 30 boiler operating day rolling average. The NO_X monitoring system shall meet the data requirements of 40 CFR 60.49Da(e)(2) (at least 90 percent valid hours for all operating hours over any 30 successive boiler operating days). Emission testing using 40 CFR part 60 Appendix A Method 7E may be used to supplement any missing data due to continuous monitor problems. The 40 CFR part 75 requirements for bias adjusting and data substitution do not apply for adjusting the data for this emission limit.

(4) By January 1, 2013, the owner or operator shall submit a letter to the Regional Administrator updating EPA of the status of lease negotiations and regulatory approvals required to comply with paragraph (i)(3) of this section. By July 1, 2013, the owner or operator shall notify the Regional Administrator by letter whether it will comply with paragraph (i)(2) of this section or whether it will comply with paragraph (i)(3) of this section and shall submit a plan and time table for compliance with either paragraph (i)(2) or (3) of this section. The owner or operator shall amend and submit this amended plan to the Regional Administrator as changes occur.

(5) The owner or operator shall follow the requirements of 40 CFR part 71 for submitting an application for permit revision to update its Part 71 operating permit after it achieves compliance with paragraph (i)(2) or (3) of this section.

(j) Dust. Each owner or operator shall operate and maintain the existing dust suppression methods for controlling dust from the coal handling and ash handling and storage facilities. Within ninety (90) days after promulgation of this paragraph, the owner or operator shall develop a dust control plan and submit the plan to the Regional Administrator. The owner or operator shall comply with the plan once the plan is submitted to the Regional Administrator. The owner or operator shall amend the plan as requested or needed. The plan shall include a description of the dust suppression methods for controlling dust from the coal handling and storage facilities, ash handling, storage, and landfills, and road sweeping activities. Within 18 months of promulgation of this paragraph each owner or operator shall not emit dust with opacity greater than 20 percent from any crusher, grinding mill, screening operation, belt conveyor, or truck loading or unloading operation.

[FR Doc. 2012–19793 Filed 8–23–12; 8:45 am]

BILLING CODE 6560–50–P

FEDERAL REGISTER

Vol. 77 Friday,

No. 165 August 24, 2012

Part III

Department of Transportation

National Highway Traffic Safety Administration

49 CFR Part 571

Federal Motor Vehicle Safety Standards; Motorcycle Brake Systems; Final Rule

DEPARTMENT OF TRANSPORTATION

National Highway Traffic Safety Administration

49 CFR Part 571

[Docket No. NHTSA–2012–0123]

RIN 2127–AK16

Federal Motor Vehicle Safety Standards; Motorcycle Brake Systems

AGENCY: National Highway Traffic Safety Administration, Department of Transportation (NHTSA).

ACTION: Final rule.

SUMMARY: This final rule amends the Federal motor vehicle safety standard (FMVSS) on motorcycle brake systems to add and update requirements and test procedures and to harmonize with a global technical regulation (GTR) for motorcycle brakes. The GTR was developed under the United Nations 1998 Global Agreement with the U.S. as an active participant, and it was derived from various motorcycle braking regulations from around the world, including the U.S. motorcycle brake systems standard. This final rule includes numerous modifications to the test procedures for motorcycle brake systems, but does not change the scope, applicability, and safety purpose of the motorcycle brake systems FMVSS.

DATES: This final rule is effective October 23, 2012. Petitions for reconsideration must be received by October 9, 2012.

The various compliance dates for these regulations are set forth, as applicable, in § 571.122, S3. Optional early compliance is permitted on and after October 23, 2012.

The incorporation by reference of certain publications listed in this rule is approved by the Director of the Federal Register as of October 23, 2012.

ADDRESSES: Petitions for reconsideration must be submitted to: Administrator, National Highway Traffic Safety Administration, 1200 New Jersey Avenue SE., Washington, DC 20590.

FOR FURTHER INFORMATION CONTACT:

For technical issues: Mr. George Soodoo, Division Chief, Vehicle Dynamics (NVS–122), Office of Crash Avoidance Standards (Email: *george.soodoo@dot.gov*) (Telephone: (202) 366–2720) (Fax: (202) 366–5930) or Mr. Ezana Wondimneh, Division Chief, International Policy and Harmonization (NVS–133), Office of International Policy, Fuel Economy and Consumer Programs (Email: *ezana.wondimneh@dot.gov*) (Telephone: (202) 366–0846) (Fax: (202) 493–2290).

For legal issues: Mr. David Jasinski, Office of the Chief Counsel (NCC–112) (Email: *david.jasinski@dot.gov*) (Telephone: (202) 366–2992) (Fax: (202) 366–3820).

You may send mail to these officials at National Highway Traffic Safety Administration, 1200 New Jersey Avenue SE., Washington, DC 20590.

SUPPLEMENTARY INFORMATION:

Table of Contents

I. Executive Summary
II. Background
A. Current Requirements of FMVSS No. 122
B. Harmonization Efforts
C. Comments Received in Response to the Notice of Proposed Rulemaking
III. General Improvements to FMVSS No. 122
A. New Terminology
B. Measurement of Performance Using Stopping Distance
C. Motorcycle Test Speed and Corrected Stopping Distance
D. Peak Braking Coefficient
E. Test Sequence
F. Brake Application Force Measurement
G. Brake Temperature Measurement
H. Burnishing Procedure
I. Notice of Wear
IV. Specific Performance Test Improvements to FMVSS No. 122
A. Dry Stop Test—Single Brake Control Actuated
B. Dry Stop Test—All Service Brake Controls Actuated
C. High-Speed Test
D. Wet Brake Test
E. Heat Fade Test
F. Parking Brake System Test
G. Antilock Brake System (ABS) Performance Test
1. Low Friction Surface for ABS Testing
2. Wheel Lock
3. Tests With ABS Electrical Failure
4. Other ABS-Related Comments
H. Partial Failure Test—Split Service Brake System
I. Power-Assisted Braking System Failure Test
V. Other Comments and Technical Amendments
A. Labeling Requirements
B. Versions of ASTM Standards
C. Terminology
VI. Compliance Date
VII. Costs and Benefits
VIII. Regulatory Analyses and Notices

I. Executive Summary

Currently, motorcycles must comply with a series of performance requirements established in Federal Motor Vehicle Safety Standard (FMVSS) No. 122, *Motorcycle Brake Systems,* in the early 1970's. While the current motorcycle brake performance requirements have ensured a minimum level of braking performance, they have not kept pace with the advancement of modern technologies. The National Highway Traffic Safety Administration (NHTSA) seeks to keep its standards up to date. This final rule updates FMVSS No. 122 based on the Motorcycle Brake Systems Global Technical Regulation (GTR), which reflects the capabilities of current in-use technologies. Updating the standard to reflect modern technologies would help prevent the introduction of unsafe motorcycle brake systems on the road. Moreover, benefits from harmonization, including decreased testing costs and ease of market entry, would accrue to current and new manufacturers, and would in turn get passed on to consumers.

The substantive performance tests and requirements of FMVSS No. 122 have not been updated since their adoption in 1972. Since that time, motorcycle brake system technology has significantly changed and improved such that FMVSS No. 122 no longer reflects the current performance of motorcycle brake system technologies. In order to address modern braking technologies, the agency sought to improve the requirements and test procedures of FMVSS No. 122. These efforts coincided with the 2002 adoption of the initial Program of Work under the 1998 United Nations' Economic Commission for Europe (UNECE) Agreement Concerning the Establishment of Global and Technical Regulations for Wheeled Vehicles, Equipment and Parts Which Can Be Fitted And/or Be Used On Wheeled Vehicles (1998 Agreement).[1] That program included motorcycle brake systems as one of the promising areas for the establishment of a GTR. The agency sought to work collaboratively on modernizing motorcycle brake regulations with other Contracting Parties to the 1998 Agreement (Contracting Parties), particularly Canada, the European Union and Japan. Through the exchange of information on ongoing research and testing and through the leveraging of resources for testing and evaluations, the agency participated in successful efforts that culminated in the establishment of the Motorcycle Brake Systems GTR under

[1] The 1998 UNECE Agreement Concerning the Establishment of Global and Technical Regulations for Wheeled Vehicles, Equipment and Parts Which Can Be Fitted And/or Be Used On Wheeled Vehicles (1998 Agreement) was concluded under the auspices of the United Nations and provides for the establishment of globally harmonized vehicle regulations. This 1998 Agreement, whose conclusion was spearheaded by the United States, entered into force in 2000 and is administered by the UNECE's World Forum for the Harmonization of Vehicle Regulations (WP.29). *See http://www.unece.org/trans/main/wp29/wp29wgs/wp29gen/wp29age.html* (last accessed September 28, 2011).

the 1998 Agreement. We believe that the provisions of the GTR NHTSA is adopting in today's final rule will improve the current requirements and test procedures of FMVSS No. 122 by updating them to more closely reflect the capabilities of modern technologies that are already being used in most motorcycles sold in the U.S.

This final rule makes improvements to FMVSS No. 122, but retains many fundamental elements of the current standard. For example, this final rule adopts new terminology and includes definitions for terms used in the regulatory text, including adopting five categories for motorcycles based on the number of wheels and maximum speed of the motorcycle. This final rule retains stopping distance as the sole compliance criterion for several performance tests in FMVSS No. 122. The current FMVSS No. 122 is improved by specifying a tolerance for the initial test speed for compliance tests, recognizing that even professional test drivers cannot attain the exact speed specified in every test. This final rule incorporates by reference an ASTM International method for the measurement of the coefficient of friction of the test surface that is already used in NHTSA's other brake standards. This final rule, like the existing version of FMVSS No. 122, specifies the order in which NHTSA will conduct its compliance tests, but it moves the brake fade test to the end of the test sequence in order to eliminate a re-burnishing procedure, resulting in a more efficient test sequence. The procedure for the initial burnish is retained with minor alteration.

The rule includes several tests that would enhance the safe operation of a motorcycle: Tests both at gross vehicle weight rating (GVWR) and lightly loaded vehicle weight, which ensure adequate braking performance at the two extremes of the loading conditions; a wet brake test that is more representative of the manner in which brakes are wetted during real world riding in wet conditions; a variety of ABS performance tests to ensure that motorcycles equipped with ABS have adequate antilock performance during emergency braking or on slippery road conditions; and a new requirement that addresses failure in the power-assisted braking system.

Specifically, the rule will improve the FMVSS No. 122 requirements in several areas. First, it will make the dry brake test requirement more stringent by specifying testing of each service brake control individually, with the motorcycle in the fully loaded condition. Second, the rule will implement a more stringent high speed test requirement by specifying a slightly higher rate of deceleration. Third, the rule replaces the existing wet brake test with one that better simulates actual in-service conditions, by spraying water onto the brake disc, instead of submerging the brake system before testing. Fourth, the rule specifies an improved heat fade test procedure based on European and Japanese national regulations, which share the same test procedure and performance requirements. Fifth, the rule specifies performance requirements for antilock brake systems (ABS), if present. Until now, FMVSS No. 122 did not contain performance criteria for ABS, where present on motorcycles.[2] Finally, the rule contains a new test requirement to evaluate the motorcycle's performance in the event of a failure in the power-assisted braking system, if so equipped.

This final rule responds to public comments on the notice of proposed rulemaking[3] (NPRM) and adopts the requirements, test procedures, and performance criteria of the NPRM without significant deviations from the proposal.

Notably, we have retained labeling requirements for brake systems components that were in FMVSS No. 122, but were not in the GTR. NHTSA feels strongly that those required labels identify important safety features and safety-related information, and they have longstanding applicability in FMVSS No. 122. The parties involved in developing the GTR understood that national regulations would continue to apply labeling and warning requirements of this sort when each national regulatory body adopted the provisions of the GTR. Since the vast majority of benefits from harmonization are achieved because of the harmonization of test procedures and performance criteria, the retention of unique FMVSS No. 122 labeling requirements does not reduce the benefits of international harmonization.

Besides updating requirements and test procedures to help ensure the safety of motorcycle brake systems, today's final rule also provides benefits from harmonization. Motorcycle manufacturers, and ultimately, consumers, both here and abroad, can expect to achieve cost savings through the formal harmonization of differing sets of standards when the Contracting Parties implement the new GTR. Motorcycles are vehicles that are prepared for the world market. It will be more economically efficient to have manufacturers using the same test procedures and meeting the same performance requirements worldwide. This rule will help achieve these benefits and thus reduce the amount of resources utilized to test motorcycles.

Although this final rule adds and updates FMVSS No. 122 performance requirements and provides benefits from harmonization, we anticipate that virtually all motorcycles currently sold in the U.S. can meet the requirements, without the need for any changes to their brake systems. Thus, we are not able to quantify direct safety benefits from this final rule.

We have considered whether this final rule will impose additional costs on manufacturers, including costs associated with certifying motorcycles as compliant with these new tests. We expect that a limited number (approximately 8,000) of three-wheeled motorcycles will require upgraded brake systems at a cost of $13.38 per motorcycle. As a result, the total cost motorcycle manufacturers will incur as a result of today's final rule is approximately $107,040 per year. All costs that manufacturers may incur if they choose to certify compliance based on NHTSA's test procedures will be offset by cost savings from the elimination of test procedures under the current version of FMVSS No. 122. For those manufacturers that choose to certify compliance by following NHTSA's test procedures, we anticipate that this final rule would result in a cost savings of less than one-tenth of a cent per motorcycle.

While the agency has not been able to quantify safety benefits for this rule since virtually all motorcycles sold in the U.S. can currently meet the proposed requirements, the agency is considering taking several other actions to attempt to decrease motorcycle fatalities.[4] Given the sources and magnitude of the safety problem posed by increased motorcycle fatalities, the Department of Transportation intends to address motorcycle safety

[2] Note, though, that we are not mandating in this rule that motorcycles be equipped with ABS brakes.

[3] *See Federal Motor Vehicle Safety Standards, Motorcycle Brake Systems, Notice of Proposed Rulemaking,* 73 FR 54020 (Sept. 17, 2008) (hereinafter ''FMVSS No. 122 NPRM'').

[4] *See* U.S. Department of Transportation, ''Action Plan to Reduce Motorcycle Fatalities,'' (October 2007), *available at http://www.nhtsa.gov/DOT/NHTSA/Communication%20&%20Consumer%20Information/Articles/Associated%20Files/4640-report2.pdf* (last accessed April 10, 2012) (hereinafter ''Action Plan to Reduce Motorcycle Fatalities''); National Highway Traffic Safety Administration (NHTSA) & Motorcycle Safety Foundation (MSF), ''National Agenda for Motorcycle Safety,'' *available at http://www.nhtsa.gov/people/injury/pedbimot/motorcycle/00-NHT-212-motorcycle/index.html* (last accessed April 10, 2012); *see generally http://www.nhtsa.gov/Safety/Motorcycles* (last accessed April 10,2012).

comprehensively, focusing on regulatory, as well as behavioral and roadway, countermeasures and strategies. In October 2007, the Department announced the ''Action Plan to Reduce Motorcycle Fatalities,'' which will help reduce motorcycle fatalities with new national safety and training standards, a curb on the use of counterfeit labeling on helmets, a new focus on motorcycle-specific road improvements, training for law enforcement officers on how to spot unsafe motorcyclists, and a broad public awareness campaign on rider safety.[5]

II. Background

FMVSS No. 122, *Motorcycle brake systems,* 49 CFR 571.122, took effect on January 1, 1974.[6] FMVSS No. 122 specifies performance requirements for motorcycle brake systems. The purpose of the standard is to provide safe motorcycle brake performance under normal and emergency conditions. The safety afforded by a motorcycle's braking system is determined by several factors, including stopping distance, linear stability while stopping, fade resistance, and fade recovery. A safe system should have features that both guard against malfunction and stop the motorcycle if a malfunction should occur in the normal service system. FMVSS No. 122 was originally conceived to cover each of these aspects of brake safety by specifying equipment and performance requirements appropriate for both two-wheeled and three-wheeled motorcycles. Because motorcycles differ significantly in configuration from other motor vehicles, the agency established a separate brake standard applicable only to this vehicle category. Many of the FMVSS No. 122 test procedures are, however, similar to those for passenger cars.[7]

Only a few changes have been made to the regulation since it was established. In response to petitions, a 1974 final rule changed the application of FMVSS No. 122 requirements for low-speed motor-driven cycles (motorcycles with 5-brake horsepower or less whose speed attainable in one mile is 30 miles per hour or less).[8] In 1978, NHTSA amended the FMVSS No. 122 parking brake test to clarify the test conditions and incorporate an interpretation applicable to three-wheeled motorcycles.[9] In 2001, the minimum hand lever force requirements for the heat fade test and water recovery test were decreased to facilitate the manufacture of motorcycles with combined braking systems.[10] Except for the above changes, FMVSS No. 122 has not been amended to keep pace with the advancement of modern brake technologies.

A. Current Requirements of FMVSS No. 122

FMVSS No. 122 applies to both two-wheeled and three-wheeled motorcycles. Among other requirements, the motorcycle manufacturer must ensure that each motorcycle can meet performance requirements under conditions specified in paragraph S6, *Test conditions,* and as specified in paragraph S7, *Test procedures.* The tests in S7 include pre- and post-burnishment effectiveness tests, a fade and recovery test, a partial failure test, a water recovery test, and parking brake test. At the end of the test procedure sequence, the brake system must pass a durability inspection. All stops must be made without lockup of any wheel.

Equipment. Each motorcycle is required to have either a split service brake system or two independently actuated brake systems. The former system encompasses a service brake system combined with a hand operated parking brake system for three-wheeled motorcycles. If a motorcycle has a hydraulic service brake system, it must also have a reservoir for each brake circuit, and a master cylinder reservoir label advising the proper grade of brake fluid. If the service brake system is a split hydraulic type, a failure indicator lamp is required. Additionally, three-wheeled motorcycles must be equipped with a friction type parking brake with a solely mechanical means to retain engagement. The service brake system must be installed so that the lining thickness of the drum brake shoes may be visually inspected, either directly or by using a mirror without removing the drums, and so that disc brake friction lining thickness may be visually inspected without removing the pads.

Pre- and post-burnish tests. The service brake system and each independently actuated service brake system on each motorcycle must be capable of stopping within specified distances from 30 miles per hour (mph) and 60 mph. The brakes are then burnished by making 200 stops from 30 mph at 12 feet per second per second (fps^2). The service brake system must then be capable of stopping at specified distances from 80 mph and from a speed divisible by 5 mph that is 4 mph to 8 mph less than the maximum motorcycle speed. The post-burnish tests are conducted in the same way as the pre-burnish stops, and the service brakes must be capable of stopping the motorcycle within the post-burnish specified stopping distances.

Fade and recovery test. The fade and recovery test compares the braking performance of the motorcycle before and after ten 60-mph stops at a deceleration of not less than 15 fps^2. As a check test, three baseline stops[11] are conducted from 30 mph at 10 to 11 fps^2, with the maximum brake lever and maximum pedal forces recorded during each stop, and averaged over the three baseline stops. Ten 60-mph stops are then conducted at a deceleration rate of not less than 15 fps^2, followed immediately by five fade recovery stops from 30 mph at a deceleration rate of 10 to 11 fps^2. The maximum brake pedal and lever forces measured during the fifth recovery stop must be within plus 20 pounds and minus 10 pounds of the baseline average maximum brake pedal and lever forces.

Partial failure test. In the event of a pressure component leakage failure, the remaining portion of the service brake system must continue to operate and shall be capable of stopping the motorcycle from 30 mph and 60 mph within specified stopping distances. The brake failure indicator light must activate when the master cylinder fluid level decreases below the minimum specified level.

Water recovery test. The water recovery test compares the braking performance of the motorcycle before and after the motorcycle brakes are immersed in water for two minutes. Three baseline stops are conducted from 30 mph at 10 to 11 fps^2, with the maximum brake lever and pedal forces recorded during each stop, and averaged over the three baseline stops. The motorcycle brakes are then immersed in water for two minutes, followed immediately by five water recovery stops from 30 mph at a deceleration rate of 10 to 11 fps^2. The maximum brake pedal and lever forces measured during the fifth recovery stop must be within

[5] *Id.* at 1.

[6] Response to Petitions for Reconsideration, Motorcycle Brake Systems, 37 FR 11973 (June 16, 1972).

[7] *See* Brake Systems on Motorcycles Proposed Motor Vehicle Safety Standard, 36 FR 5516 (Mar. 24, 1971).

[8] Final Rule, Motor-Driven Cycles, 39 FR 32914 (Sept. 12, 1974).

[9] Final Rule, Motorcycle Brake Systems, 43 FR 46547 (Oct. 10, 1978).

[10] Final Rule, Federal Motor Vehicle Safety Standards, Motorcycle Brake Systems, 66 FR 42613 (Aug. 14, 2001).

[11] The baseline check is used to establish a specific motorcycle's pre-test performance to provide a basis for comparison with post-test performance. This comparison is intended to ensure adequate brake performance, at reasonable lever and pedal forces, after numerous high speed or wet brake stops.

plus 20 pounds and minus 10 pounds of the baseline average maximum brake pedal force and the lever force.

Parking brake test. For motorcycles required to be equipped with a parking brake system, such system must be able to hold the motorcycle on a 30 percent grade, in both forward and reverse directions, for 5 minutes. A parking brake indicator lamp must be provided.

B. Harmonization Efforts

Globally, there are several existing regulations, directives, and standards that pertain to motorcycle brake systems. As all share similarities, the Contracting Parties to the 1998 Agreement under WP.29 tentatively determined that the development of a GTR under the 1998 Agreement would be beneficial.

In an effort to select the best of existing performance requirements for a GTR, the U.S. and Canada conducted analyses of the relative stringency of three national motorcycle brake system regulations. These were the UNECE Regulation No. 78, FMVSS No. 122, and the Japanese Safety Standard JSS 12–61. The subsequent reports, along with proposed provisions of a GTR, were presented at meetings of the Working Party for Brakes and Running Gear (GRRF),[12] and were made available in the NPRM docket.[13] While using different methodologies, the results from the U.S./Canada report were similar to an industry led report that examined the issue under the GRRF.[14] These studies completed by the U.S., Canada, and the industry provided the basis for the development of the technical requirements of the GTR.

The informal group used the feedback from the GRRF presentations to assist with the completion of the proposed GTR, a copy of which can be found in the NPRM docket.[15] Where national regulations or standards address the same subject, e.g. dry stop or heat fade performance requirements, the informal group reviewed comparative data on the relative stringency of the requirements from the research and studies and included the most stringent options. Additional testing was conducted to confirm or refine the testing and performance requirements. Qualitative issues, such as which wet brake test to include, were discussed on the basis of the original rationales and the appropriateness of the tests to modern conditions and technologies. In each of these steps, specific technical issues were raised, discussed, and resolved, as discussed in the NPRM and below. The informal working group held a total of eight meetings concerning the development of the GTR. In November 2006, WP.29 approved the GTR on Motorcycle Brake Systems, and established it in the Global Registry as Global Technical Regulation No. 3.

As explained in the NPRM, the GTR on motorcycle brake systems consists of a compilation of the most stringent and relevant test procedures and performance requirements from current standards and regulations. As a result of the comparison process, the selected performance requirements of the GTR are mainly drawn from the UNECE Regulation No. 78, the FMVSS No. 122 and the Japanese Safety Standard JSS 12–61 (JSS 12–61). The GTR is comprised of several fundamental tests, each with their respective test procedures and performance requirements. These tests and procedures are listed below along with the national regulation on which they are based:

- Burnish procedure (FMVSS No. 122)
- Dry stop test with each service brake control actuated separately (UNECE Regulation No. 78/JSS 12–61)
- Dry stop test with all service brake systems applied simultaneously (FMVSS No. 122)
- High speed test (JSS 12–61)
- Wet brake test (UNECE Regulation No. 78/JSS 12–61)
- Heat fade test (UNECE Regulation No. 78/JSS 12–61)
- Parking brake test (UNECE Regulation No. 78/JSS 12–61)
- ABS tests (UNECE Regulation No. 78/JSS 12–61)
- Partial failure test—split service brake systems (FMVSS No. 122)
- Power-assisted braking system failure test (new)

The GTR process was transparent to country delegates, industry representatives, public interest groups, and other interested parties. Information regarding the meetings and negotiations was publicly available through notices published periodically by the agency and UN Web site.[16] See the NPRM for additional discussion of the harmonization process.[17]

C. Comments Received in Response to the Notice of Proposed Rulemaking

The U.S., as a Contracting Party of the 1998 Agreement that voted in favor of establishing this GTR at the November 15, 2006 Session of the Executive Committee of the 1998 Agreement, is obligated under the 1998 Agreement to initiate the process for adopting the provisions of the GTR.[18] On September 17, 2008, NHTSA published a notice of proposed rulemaking (NPRM) to update FMVSS No. 122 that was based on the Motorcycle Brake Systems GTR, which satisfied the U.S. obligations under the 1998 Agreement noted above.

In response to the NPRM, NHTSA received comments from the following parties: The Motorcycle Industry Council (MIC),[19] American Honda Motor Company, Inc. (Honda),[20] Harley-Davidson Motor Company (Harley-Davidson),[21] Robert Bosch LLC (Bosch),[22] the Insurance Institute for Highway Safety (IIHS),[23] ASTM International (ASTM),[24] SMO Group, L.L.C. (SMO),[25] and the American Association for Justice (AAJ).[26]

[12] The GRRF is made up of delegates from many countries around the world, and who have voting privileges. Representatives from manufacturing and consumer groups also attend and participate in the GRRF and informal working groups that are developing GTRs. Those that chose not to participate are kept apprised of the GTR progress from progress reports which are presented at the GRRF meetings and then posted on the UN's Web site.

[13] *See* Docket Nos. NHTSA–2008–0150–0005.1, NHTSA–2008–0150–0006.1.

[14] *See* Docket No. NHTSA–2008–0150–0007.1.

[15] *See* Docket No. NHTSA–2008–0150–0002.1. The first formal proposal for a GTR concerning motorcycle brake systems was presented during the 58th GRRF session in September 2005. A more detailed report on the technical details, deliberations and conclusions, which led to the proposed GTR, was provided separately as informal document No. GRRF–58–16. *See* Docket No. NHTSA–2008–0150–0004.1.

[16] *See* Recommendations for Establishing Global Technical Regulations Under the United Nations/Economic Commission for Europe 1998 Global Agreement, Motor Vehicle Safety, 66 FR 4893, Docket No. NHTSA–00–7538 (Jan. 18, 2001); NHTSA's Activities Under the United Nations Economic Commission for Europe 1998 Global Agreement, 69 FR 60460, Docket No. NHTSA–03–14395 (Oct. 8, 2004); NHTSA's Activities Under the United Nations Economic Commission for Europe 1998 Global Agreement, 71 FR 59582, Docket No. NHTSA–2003–14395 (Oct. 10, 2006); *see also http://www.unece.org/trans/main/wp29/wp29wgs/wp29grrf/grrf-infmotobrake7.html* for a record of all GRRF meetings and documents presented therein (last accessed April 26, 2010).

[17] FMVSS No. 122 NPRM, 73 FR at 54022.

[18] While the 1998 Agreement obligates such Contracting Parties to initiate rulemaking within one year of the establishment of the GTR, it leaves the ultimate decision of whether to adopt the GTR into their domestic law to the parties themselves.

[19] Motorcycle Industry Council Inc. Comments, Docket No. NHTSA–2008–0150–0017.1 (hereinafter ''MIC Comments'').

[20] American Honda Motor Co., Inc. Comments, Docket No. NHTSA–2008–0150–0018.1 (hereinafter ''Honda Comments'').

[21] Harley-Davidson Motor Company, Docket No. NHTSA–2008–0150–0012 (hereinafter ''Harley-Davidson Comments'').

[22] Robert Bosch LLC Comments, Docket No. NHTSA–2008–0150–0016.1 (hereinafter ''Robert Bosch Comments'').

[23] Insurance Institute for Highway Safety Comments, Docket No. NHTSA–2008–0150–0015.1.

[24] ASTM International Comments, Docket No. NHTSA–2008–0150–0011.1.

[25] SMO Group, L.L.C. Comments, Docket No. NHTSA–2008–0150–0013.1.

[26] American Association for Justice Comments, Docket No. NHTSA–2008–0150–0014.1.

All comments received were timely, and they are each considered in this final rule and discussed below, with one exception. The AAJ commented on the language of the preamble concerning implied preemption, and its comment was neither related to the proposed regulatory text, nor to motorcycle braking nor to motorcycle safety.[27] Because that comment did not specifically relate to the proposal, and because NHTSA has already responded to a similar AAJ comment in the context of another **Federal Register** notice,[28] we do not address the AAJ comment any further here.

Comments were generally supportive of NHTSA's intent to harmonize FMVSS No. 122 with other nations' and regulatory bodies' standards through the adoption of the GTR. The substantive comments received were concerned mainly with test procedures rather than with brake system design requirements. Specifically, Harley-Davidson, Honda, and the Motorcycle Industry Council (MIC) all commented on each of the following three issues, which were the main issues in their submittals:

- The NHTSA proposal in the NPRM specified stopping distance as the sole compliance criterion for several performance tests in FMVSS No. 122 while leaving out the option to use Mean Fully Developed Deceleration (MFDD) where applicable. Commenters requested that NHTSA include MFDD as an alternative compliance option for measuring stopping performance.
- The NPRM specified that Peak Braking Coefficient (PBC) be measured by an ASTM skid-trailer method only. It did not include other methods that were stated in the GTR for measurement of test surface friction coefficient. Commenters requested that the agency allow manufacturers the option to choose which test method it uses to measure PBC.
- The NHTSA proposal changed ''nominal PBC'' as it appears in the GTR to just ''PBC,'' i.e., NHTSA removed the word ''nominal'' in specifying the friction coefficient of test track surfaces used for motorcycle brake testing. Commenters requested that NHTSA retain the GTR term ''nominal,'' based on best engineering practices.

III. General Improvements to FMVSS No. 122

Here, we discuss the proposed general amendments and improvements to FMVSS No. 122, any comments received on these proposed improvements, and the agency's response to those comments. Where no comments were received on a proposed amendment, or a certain aspect of an amendment, NHTSA has generally adopted those proposals in accordance with the rationale detailed in the NPRM. Although this final rule states as such for each amendment, we generally will not repeat the rationale and justification for aspects of the proposal that did not receive comment. We refer readers to the NPRM for the basis for those amendments.[29]

A. New Terminology

The NPRM proposed to revise or add definitions in FMVSS No. 122 (paragraph S4) where necessary to define terms used in the proposed regulatory text, and we are largely retaining the definitions as proposed in the NPRM. In order to streamline the proposed regulatory text to more closely reflect the GTR text, some of the new proposed terms were common terminology and definitions based on the UN document titled ''Special Resolution No. 1 Concerning the Common Definitions of Vehicle Categories, Masses and Dimensions (S.R.1)'' [30] (UN Doc. S.R.1) developed for the purposes of the GTRs. Thus, the NPRM proposed to add certain new definitions to § 571.122 S4, *Definitions,* that may be similar to existing 49 CFR Part 571 definitions. For example, current FMVSS No. 122 specifies that performance requirements must be met when the ''motorcycle weight is unloaded vehicle weight plus 200 pounds.'' [31] This is effectively equivalent to the mass term ''lightly loaded'' in the proposed rule, which is the testing condition specified for the proposed dry stop test (all service brake controls actuated), the high-speed test, the antilock brake systems tests, and the partial failure test.[32] These proposed terms, some of which may be similar or equivalent to existing terms defined elsewhere in 49 CFR Part 571, are used in the motorcycle brakes GTR in an effort to streamline the GTR and maximize harmonization benefits.

Additionally, the proposed rule divided motorcycles into five categories, which are referenced in the GTR. These motorcycle categories are based on number of wheels and maximum speed, and were originally defined in the UN Doc. S.R.1, as amended in May 2007.[33] We included these categories in the definitions portion of proposed FMVSS No. 122 because under the GTR some performance tests do not apply to certain motorcycle categories, and certain motorcycle categories have different performance requirements than others.

Category 3–1 and category 3–3 motorcycles are two-wheeled motorcycles. Category 3–1 motorcycles are two-wheeled motorcycles with an engine cylinder capacity not exceeding 50 cm^3 and a maximum design speed not exceeding 50 kilometers per hour (km/h). Category 3–3 motorcycles are two-wheeled motorcycles with an engine cylinder capacity exceeding 50 cm^3 or a maximum design speed exceeding 50 km/h. Category 3–2 motorcycles are three-wheeled motorcycles of any wheel arrangement with an engine cylinder capacity not exceeding 50 cm^3 and a maximum design speed not exceeding 50 km/h. Category 3–4 motorcycles are those manufactured with three wheels asymmetrically arranged in relation to the longitudinal median plane with an engine cylinder capacity exceeding 50 cm^3 or a maximum design speed exceeding 50 km/h. Finally, category 3–5 motorcycles are motorcycles manufactured with three wheels symmetrically arranged in relation to the longitudinal median plane with an engine cylinder capacity exceeding 50 cm^3 or a maximum design speed exceeding 50 km/h.

Motorcycle categories. Based on comments from both Harley-Davidson

[27] The AAJ has submitted to several other rulemaking dockets similar comments regarding the agency's preamble discussions of preemption.

[28] See Federal Motor Vehicle Safety Standards; Electric-Powered Vehicles; Electrolyte Spillage and Electrical Shock Protection, 75 FR 33515, 33524–25 (Jun. 12, 2010).

[29] *See* FMVSS No. 122 NPRM, 73 FR at 54023–54027.

[30] World Forum for Harmonization of Vehicle Regulations (WP.29), *Special Resolution No. 1 Concerning the Common Definitions of Vehicle Categories, Masses and Dimensions (S.R.1),* U.N. Doc. TRANS/WP.29/1045 (Sept. 15, 2005), *available at http://www.unece.org/trans/doc/2005/wp29/TRANS-WP29-1045e.pdf* (last accessed April 26, 2010).

[31] 49 CFR 571.122, S6.1. ''Unloaded vehicle weight'' is defined under 49 CFR 571.3(b) to mean ''the weight of a vehicle with maximum capacity of all fluids necessary for operation of the vehicle, but without cargo, occupants, or accessories that are ordinarily removed from the vehicle when they are not in use.''

[32] Lightly loaded means the sum of unladen vehicle mass (mass of the vehicle with bodywork and all factory fitted equipment, and fuel tanks filled to at least 90 percent) and driver mass ''plus 15 kg for test equipment, or the laden condition, whichever is less.'' FMVSS No. 122 S4, *Definitions* (proposed).

[33] *See* WP.29, *Amendment to Special Resolution No. 1 Concerning the Common Definitions of Vehicle Categories, Masses, and Dimensions,* U.N. Doc. ECE/TRANS/WP.29/1045/Amend.1 (May 9, 2007), *available at http://www.unece.org/trans/main/wp29/wp29wgs/wp29gen/wp29fdoc/1000/ECE-TRANS-WP29-1045a1e.pdf* (last accessed April 26, 2010).

and the MIC regarding inconsistencies between category 3–4 and category 3–5 requirements, NHTSA has identified a series of mistakes in the proposed regulatory text relating to the identification of these two categories. For example, Harley-Davidson and the MIC commented that the stopping distances for category 3–4 and 3–5 motorcycles listed in Table 2 (Performance requirements, Dry stop test—single brake control actuated) appear to have been incorrectly reversed in the first two sections of the table: Single Brake System—Front Wheel(s) Braking Only, and Single Brake System—Rear Wheel(s) Braking Only.[34] Proposed regulatory text Table 2 listed these tests as inapplicable to category 3–4 motorcycles and listed a stopping distance for category 3–5 motorcycles. These commenters noted that under the proposed regulatory text, stopping distances would be inapplicable for category 3–5 vehicles in these two sections because those vehicles are required to have a combined or split service brake. However, as noted by the commenters, motorcycle-sidecar combinations of category 3–4 would still be permitted to be equipped with separate brakes.

These commenters further stated that it similarly thought the reference to category 3–5 in Table 4 (Performance requirements, Power-assisted braking system failure test) should be category 3–4 because category 3–5 vehicles will carry split service systems or combined break systems (CBS) and are covered in the subsequent section of Table 4.[35]

Agency Response: The regulatory text of the NPRM was based on a version of the GTR in which the definitions for category 3–4 motorcycles and category 3–5 motorcycles were listed incorrectly. Specifically, the category 3–4 and 3–5 notations were actually interchanged with each other. This error was addressed in the GTR by a correction document which stated that the text ''3–4'' as it appears throughout the GTR shall be replaced with ''3–5,'' and the text ''3–5'' shall be replaced with the text ''3–4.'' [36] This correction results in the GTR associating category 3–4 requirements with sidecar-equipped motorcycles and category 3–5 requirements with symmetric three-wheeled motorcycles, or ''trikes,'' as intended.

Because the regulatory text of the NPRM corresponded closely with that of the GTR, this mix-up was carried forward in the NPRM. Thus, there are a variety of inconsistencies in the requirements for category 3–4 and category 3–5 motorcycles throughout the NPRM regulatory text. This includes Table 2 as noted by the commenters. Although the definitions of ''Category 3–4 motorcycle'' and ''Category 3–5 motorcycle'' given in paragraph S4 of the proposed regulatory text are correct, most of the subsequent occurrences throughout the regulatory text are incorrect. This mistake is easily remedied by replacing ''3–4'' with ''3–5,'' and vice versa, in each place where requirements apply to one or the other category. We have corrected the final rule regulatory text by applying these corrections in each appropriate instance. Concerning Table 2, to maintain the desired ordering of categories, we have moved each stopping distance specification listed for category 3–5 to the corresponding category 3–4 row, and listed ''not applicable'' in each category 3–5 row. Finally, we have made a related clarification in subsection S6.5.2.2(d)(3) of the regulatory text, to add a specification of category 3–5.

''Lightly loaded'' definition. The MIC commented that in the parenthetical included in this definition, it was unclear as to which paragraphs the text was intending to refer.[37] The proposed definition of ''lightly loaded'' referred to ''paragraphs 4.9.4 to 4.9.7'' in a parenthetical, and no such paragraphs existed in the proposed regulatory text.

Agency Response: The proposed range quoted above was referring to the requirements as they were listed in the GTR. The proposed rule should have listed the paragraphs as they were associated with the proposed regulatory text. The GTR paragraphs referenced are a series of the ABS test procedures. The corresponding paragraphs in NHTSA's proposed regulatory text were S6.9.4 through S6.9.7. We have made this change in the final regulatory text.

''Unladen vehicle mass'' definition. The MIC suggested that the proposed definition of ''lightly loaded'' should use the term ''motorcycle,'' as opposed to the term ''vehicle'' in the definition.[38] They suggest that perhaps ''motorcycle'' should be used in place of the term ''vehicle'' elsewhere in the proposed standard as well.

Agency Response: Although the term ''motorcycle'' is used throughout the current FMVSS No. 122, we are not making this change as the commenter suggested. The term ''vehicle'' is the one used in the GTR's regulatory definitions as well as in the UN Doc. S.R.1, which is the source document for the vehicle categorization used in the GTR. For these reasons, and in order to streamline the GTR and to maximize the benefits of harmonization, we are in favor of keeping the term ''vehicle'' as used throughout the proposed regulatory text.

CBS. Bosch commented that electro-mechanical CBS (eCBS) should be distinguished from conventional CBS because the failure mode for eCBS is different from CBS.[39] Bosch suggested that the paragraph S4 definitions should exclude eCBS and that this could be accomplished by rewording the definition for each motorcycle category to say that CBS is ''A service brake system * * * *mechanically linked and* actuated by a single control.''

Bosch differentiates eCBS from conventional CBS because eCBS systems have no mechanical or hydraulic link between the front and rear brake circuits. With eCBS, the activation of a front or rear service brake by a rear or front brake control, respectively, is accomplished by purely electronic means. Bosch stated that the distinction between eCBS and conventional CBS is important because the failure mode for eCBS is different than for CBS, i.e., failed eCBS performs just like conventional, separate front and rear brakes. Bosch explained that ''[a]n eCBS is subject to system failure, deactivation, and degradation, which results in a system that is functionally equivalent to a non-CBS with the corresponding performance limits.'' [40]

Bosch commented that their proposed re-definition to make eCBS subject only to the performance requirements for single brake systems (outlined above) is appropriate because of unique characteristics of eCBS that are not accounted for in the proposed rule. Bosch pointed out that an eCBS, unlike a CBS, may be equipped with a deactivation switch, a low-speed mode, speed-dependent brake force distribution, or a variety of rider-selectable modes that tune the system for riding conditions. Bosch stated that, ''[t]hese additional eCBS characteristics differentiate an eCBS from a CBS and prescribe that the performance

[34] Harley-Davidson Comments, Docket No. NHTSA–2008–0150–0012 at 4; MIC Comments, Docket No. NHTSA–2008–0150–0017.1 at 3.

[35] *Id.*

[36] *See Global Technical Regulation No. 3, Corrigendum 1, Motorcycle Brake Systems,* U.N. Doc. ECE/TRANS/180/Add.3/Corr.2 (Jan. 29, 2008), *available at http://www.unece.org/trans/main/wp29/wp29wgs/wp29gen/wp29registry/gtr3.html* (last accessed April 26, 2010).

[37] MIC Comments, Docket No. NHTSA–2008–0150–0017.1 at 3.

[38] *Id.*

[39] Bosch Comments, Docket No. NHTSA–2008–0150–0016.1.

[40] *Id.* at 2.

requirements for a CBS are not always applicable for an eCBS.'' [41]

Bosch suggested that, as an alternative to excluding eCBS from the regulatory definitions, NHTSA could instead define eCBS separately from CBS and provide separate performance requirements to account for the different eCBS failure modes, similar to the way that ABS electrical failure is treated in S6.9.8 of the proposed FMVSS No. 122 regulatory text.[42] According to Bosch, this would have to include an exception to the performance requirements defined in Table 2.

Agency Response: Bosch's comment suggests that NHTSA should include specific test procedures to address the possibility of a failed eCBS system. As Bosch acknowledges, this would entail defining eCBS separately from CBS, and/or adding separate test procedures for eCBS. If separate test procedures were added, eCBS would be treated similarly to ABS, for which the NPRM has special procedures, including the electrical failure test of S6.9.8.

Bosch seems to suggest that system failure is more likely in the case of an eCBS than a conventional, mechanical CBS, which would seem logical because of the purely electronic link between front and rear brake circuits. Certainly, eCBS could be designed so as to be readily deactivated, such as by equipping the motorcycle with an on/off switch for that purpose. In contrast, deactivation would not necessarily be easily accomplished with conventional CBS, but much would depend on the details of the CBS system design.

Since eCBS systems currently are not in use, it is difficult for us to evaluate whether adding specific test procedures to address eCBS system failure is appropriate. Furthermore, in the FMVSS No. 122 proposal, there were no CBS-specific requirements that an eCBS would or should be incapable of meeting, nor is eCBS addressed in the GTR separately from CBS. Since the GTR does not include any proposal for failed CBS performance and since no eCBS system is currently available commercially, the agency believes that establishing failed systems performance requirements for eCBS would be premature. Therefore, we are electing not to make any changes related to eCBS at this time, but we will evaluate in the future whether such accommodations are necessary.

[41] *Id.*

[42] *Id.* at 3.

B. Measurement of Performance Using Stopping Distance

The GTR specifies stopping performance requirements in terms of both stopping distance and MFDD. The NPRM proposed stopping distance as the sole compliance criterion for several performance tests in proposed FMVSS No. 122 because, as noted in the proposal, stopping distance is a longstanding compliance criterion in FMVSS No. 122 as well as in NHTSA's standards for brake performance of both light vehicles and heavy vehicles.[43] We further stated that the Executive Committee of the 1998 Agreement and WP.29 are aware that the U.S. intended to make these choices as allowed in the GTR.

Harley-Davidson, Honda, and the MIC each suggested that the agency should include the alternative criterion of MFDD, which is a calculated value based on both speed and stopping distance measurements.[44] MFDD and stopping distance are both included in the GTR as alternative performance measures in several of the performance tests.

Harley-Davidson commented that, based on its significant experience with MFDD, a vehicle that passes the stopping distance measure will also pass MFDD. Harley-Davidson also commented that the GTR and the UNECE Regulation No. 78 allow either measure to be used. Further, Harley-Davidson stated that some of the international inspection agencies prefer MFDD, and that MFDD removes human factors from brake performance testing. Harley-Davidson pointed out that an MFDD-like procedure is already incorporated into the proposed regulatory text, specifically in proposed section S6.7.3.2(d)(1) pertaining to heat fade tests.[45] Harley-Davidson stated that as a result of inclusion of MFDD into the heat fade test requirements, manufacturers and test facilities will be required to apply MFDD for some measures. Finally, Harley-Davidson noted that the commentary accompanying the GTR recommends using the MFDD measure ''to maintain consistency in the results.''

Honda likewise requested that MFDD be included in NHTSA's final rule. Honda commented that the GTR did not give individual regulating bodies the discretion to exclude MFDD. Honda stated that the ''GTR does not specify the option for each region to select only one method of measurement.'' Further, Honda noted that ''the MFDD method has been utilized by Honda as the primary method for determining stopping performance and has found it to be more reliable and repeatable than the distance method.''

Similarly, the MIC pointed out that the GTR includes both MFDD and stopping distance as alternative performance criteria, which allows the manufacturer to choose to measure brake performance by either deceleration or stopping distance. It also noted that deceleration-based performance tests are already part of NHTSA's proposal, in proposed paragraphs S6.6.3 *et seq.,* and in paragraph S5.3.2, which refers to ''continuous deceleration recording.'' The MIC took issue with the rationale NHTSA gave for excluding MFDD:

> The reason given [in the NPRM] for mandating brake performance measurement exclusively by stopping distance is ''to enhance the enforceability of the Standard as opposed to providing optional performance measures,'' and that ''this is consistent with how performance requirements are stated in other Federal Motor Vehicle Safety Standards.'' We don't agree that either is sufficient to justify departure from the GTR and not in the best interest of harmonization.

The MIC, Harley-Davidson, and Honda each requested that NHTSA incorporate the MFDD as an alternative performance measure in all appropriate tests in the final rule.

Agency Response: We are declining to adopt these commenters' suggestions to allow manufacturers a choice of performance measures in certain performance tests. As explained below, providing manufacturers with an option for compliance in FMVSS test procedures is not common because it presents a substantial enforcement difficulty for the agency. Moreover, NHTSA participated in the development of the GTR and during that process reached agreement with the other parties that we would continue to use stopping distance in all appropriate FMVSS No. 122 test procedures. The inclusion of a stopping distance measurement procedure was an important factor in U.S. approval of the GTR.

When NHTSA stated in the NPRM that specifying stopping distance enhances enforceability and referenced other FMVSSs to explain how performance criteria are specified elsewhere by the agency, we meant that for various reasons (detailed below)

[43] FMVSS No. 122 NPRM, 73 FR at 54034.

[44] *See* Honda Comments, Docket No. NHTSA–2008–0018.1 at 2; MIC Comments, Docket No. NHTSA–2008–0150–0017.1 at 2; Harley-Davidson Comments, Docket No. NHTSA–2008–0150–0012 at 2.

[45] Although Harley-Davidson's comments referred to this provision as part of the ''wet fade tests,'' we will refer to the referenced proposed tests as the ''heat fade tests,'' consistent with the NPRM.

NHTSA believes stopping distance is a better performance criteria than a measurement of deceleration, and we do not ordinarily provide manufacturer options for compliance because it can create an enforcement problem for the agency. For example, if we allow two different measures of braking performance in FMVSS No. 122 and, when testing for compliance, NHTSA measures stopping distance and finds a failure to meet the minimum stopping distance requirement test, NHTSA would then be required to conduct additional testing to calculate MFDD.

Additionally, we believe that stopping distance is a preferable measurement of performance because MFDD assumes a certain level of brake system responsiveness and does not consider performance over the entire braking event. We believe the stopping distance measure is less design-restrictive because it allows a manufacturer to develop brake performance for the entire range of a braking event. Similarly, since it accounts for the distance traveled between the time a brake lever or pedal is applied and the time the motorcycle actually begins to decelerate, stopping distance addresses the potential problem of slow-acting brake systems.

Further, none of the commenters presented any new information on this issue. Nor did any commenter present data to support assertions about accuracy of MFDD, for example, that MFDD is ''more reliable and repeatable than the distance method.'' [46] Since stopping distance is used as one of the measured values in the equation for calculating MFDD, the accuracy of MFDD depends to a great extent on stopping distance accuracy. MFDD is not a measured value but is calculated using measurements of speed and stopping distance. Because it is a factor in the MFDD calculation, stopping distance still would have to be measured even if MFDD was the specified compliance criterion in the NHTSA standard. Consequently, there is little additional test burden in having to collect stopping distance data.

In response to the commenter that stated that the commentary accompanying the GTR recommends using the MFDD measure ''to maintain consistency in the results,'' we point out that this GTR preamble language was referring to the difference between the UNECE Regulation No. 78 specification of MFDD, and the JSS 12–61 specification of vehicle mean saturated deceleration (MSD). In the relevant portion of the GTR preamble, the text was discussing the difference between MFDD and MSD, and then stated that ''[i]n order to maintain consistency in the results, the MFDD was adopted [instead of MSD] to measure braking deceleration performance.'' [47] Thus, NHTSA does not believe this phrase should be taken out of context and used to characterize the GTR preamble discussion of MFDD versus stopping distance. In the GTR, the performance requirements for the different tests were as specified in the respective national regulation on which the test was based. However, based on U.S. insistence, where the basis of a test was performance measured by MFDD, the GTR also specified a stopping distance equivalent performance measure, since the U.S. would not support a GTR that specified only measurement of performance using MFDD. All GTR performance requirements refer to both measurements of stopping distance and MFDD in the table in paragraph 4.3.3 of the GTR.[48]

In response to Harley-Davidson's observation that the heat fade test measures performance by referring to MFDD, we do not agree. The commenter referenced proposed paragraph S6.7.3.2(d)(1), which describes the force that is to be applied to the brake lever when actuated during the heating stops: ''For the first stop: The constant control force that achieves a vehicle deceleration rate of 3.0–3.5 m/s^2 while the vehicle is decelerating between 80 percent and 10 percent of the specified speed.'' Since this specification is a way to determine force, stopping distance is not appropriate here. Further, the specified braking force to heat the brakes is not a performance requirement. In that paragraph, the test rider is just heating the brake. Paragraph S6.7.4, *Hot brake stop—test conditions and procedure,* then specifies how to test the hot brakes and paragraph S6.7.5, *Performance requirements,* specifies the comparative performance requirements between the baseline stop measurements and the hot brake stop measurements, in terms of stopping distance. Therefore, the use of a deceleration specification to describe the actuation force that a test rider is to use in the heat fade test is not inconsistent with the use of stopping distance for all performance measurements.

The MIC similarly commented that proposed paragraph S5.3.2 describes ''continuous deceleration recording,'' and stated that proposed paragraphs S6.6.3 *et seq.* reference deceleration measurements for wet and heat fade conditions even though it is not called MFDD. As explained above, the heat fade test does not describe performance requirements in terms of deceleration, but merely uses deceleration to specify how to determine how much force to apply to a brake when a test rider is actuating the brake for the purpose of heating it. The deceleration measurement specified in section S6.6.3 (wet brake test) is for average deceleration over the whole duration of the stop in accordance with paragraph S5.3.2. This is not the same as MFDD as the MIC suggested. MFDD is the vehicle deceleration calculated between 80 and 10 percent of the vehicle initial speed, not the deceleration from initial speed to full stop.

NHTSA notes that the 100 km/h dry stop test that was developed from the current FMVSS No. 122 specifies performance in terms of stopping distance only. It does not specify a deceleration-based criterion like MFDD. Similarly, the ABS stopping distance performance tests on low and high friction surfaces specify performance measures in terms of stopping distance only. Hence, in these tests, there is no alternative to measuring and recording stopping distance.

Finally, we note that the use of stopping distance in the FMVSS does not preclude the use of MFDD by manufacturers or other parties. As long as there is a basis for correlating with the FMVSS method, the test procedure used to certify a motorcycle brake system is left to the manufacturer's discretion. Specifically, FMVSSs do not require manufacturers to test every motor vehicle or piece of motor vehicle equipment (e.g., tires) to the specifications in each safety standard. The FMVSSs set performance standards that motor vehicles and motor vehicle equipment must meet when tested by the agency in accordance with the test procedures specified in the FMVSS associated with that performance requirement. Under the Motor Vehicle Safety Act, ''a manufacturer or distributor of a motor vehicle or motor vehicle equipment [must] certify * * * that the vehicle or equipment complies with applicable [FMVSSs].'' [49] Under this enforcement mechanism, known as ''self certification,'' the burden for ensuring that all new vehicles and equipment comply with Federal regulations is borne by the manufacturer. NHTSA does not perform any pre-sale testing, approval, or

[46] Honda Comments, Docket No. NHTSA–2008–0018.1 at 2.

[47] *See* Docket No. NHTSA–2008–0150–0002.1 at 11–12.

[48] *Id.* at 40.

[49] 49 U.S.C. 30115(a).

certification of vehicles or equipment, whether of foreign or domestic manufacture, before introduction into the U.S. retail market. To ensure compliance with agency regulations, NHTSA randomly tests certified vehicles or equipment (in accordance with the test procedures laid out in the regulations) to determine whether the vehicles or equipment fail to comply with applicable standards. For such enforcement checks, NHTSA purchases vehicles and equipment, which are then tested according to the procedures specified in the standards. If the vehicle or equipment passes the test, no further action is taken. If the vehicle or equipment fails, NHTSA has the authority to request additional information from the manufacturer on the basis for certification and to assess civil penalties for any confirmed violation.[50]

Neither the National Traffic and Motor Vehicle Safety Act[51] (nor other statutes NHTSA administers) nor NHTSA standards and regulations require that a manufacturer base its certifications on any particular tests, any number of specified tests or, for that matter, any tests at all. A manufacturer is required to exercise due care in certifying its motor vehicles. It is the responsibility of the manufacturer to determine initially what test results, computer simulations, engineering analyses, or other information it needs to enable it to certify that its vehicles comply with applicable Federal safety standards. Thus, manufacturers and test laboratories can measure performance using stopping distance, or another method, for their own certification purposes as long as they can reasonably correlate test results using their chosen method with those using the FMVSS procedure and show that their certification tests provide a sound basis for compliance with the safety standard.

C. Motorcycle Test Speed and Corrected Stopping Distance

The GTR set deceleration or stopping distance performance requirements for a specified initial test speed. While professional test riders can approach this initial test speed, it is unlikely that the test will be started at the exact speed specified, affecting the stopping distance measurement. The current FMVSS No. 122 does not specify a speed tolerance for this potential variation, but consistent with the GTR, the proposed rule specified Japan's existing general tolerance of ± 5 km/h in S6.1.4.

As explained in the NPRM, a method for correcting the measured stopping distance (in the event of the actual test speed deviating from the specified test speed, but within the ± 5 km/h tolerance) was proposed to compensate for the difference between the specified test speed and the actual speed where the brakes were applied (*see* S5.3.1(b)).[52] The MIC commented that the paragraph S6.1.4 reference to the proposed corrected stopping distance method in the proposed regulatory text appeared to be incorrect.[53]

Agency Response: We agree with the MIC. Paragraph S6.1.4 of the proposed regulatory text referred to the stopping distance correction formula as being in paragraph S5.3.2(b). The actual stopping distance correction formula was listed in paragraph S5.3.1(b), as noted by the MIC. NHTSA has corrected this inaccurate reference in the final regulatory text.

D. Peak Braking Coefficient

The peak braking coefficient (PBC) is a measure of the coefficient of friction of the test surface and is an important parameter in evaluating the brake performance of a vehicle. PBC is effectively equivalent to the peak friction coefficient (PFC) as defined in FMVSS No. 121, *Air brake systems,* and FMVSS No. 135, *Light vehicle brake systems.* The GTR specifies test surface conditions, one of which is that the high-friction ''test surface has a nominal [PBC] of 0.9, unless otherwise specified.'' As explained in the NPRM, for reasons of objectivity, we specified in the proposed rule a PBC equal to 0.9 for the high-friction dry test surface used for the motorcycle brake system tests.

FMVSS No. 122 currently specifies that the road tests be conducted on an 8-foot-wide level roadway having a skid number of 81. The skid number is also a measure of the coefficient of friction of the test surface and is derived by measuring the friction using a locked wheel, whereas the PBC is derived by measuring the peak surface friction before wheel lockup occurs. PBC is a more relevant surface friction measurement for non-locked wheel tests, such as those included in FMVSS No. 122 and in the GTR. Other Federal motor vehicle safety standards for braking systems, FMVSS No. 121 and FMVSS No. 135, specify the road test surface using a PBC of 0.9 when measured using the American Society for Testing and Materials (ASTM) E1136–93 (Reapproved 2003) standard reference test tire, in accordance with ASTM Method E1337–90 (Reapproved 2002), at a speed of 40 mph without water delivery.

As explained in the NPRM, the GTR defines the test surface using a PBC value instead of a skid number value since peak braking coefficient is a more representative measure of the type of braking tests performed in the requirements with a rolling tire. However, the decision was made to not specify the method used to measure the coefficient of friction but leave it to the national regulations to specify which of the above test methods should be used to measure PBC. In the U.S., the ASTM Method for measuring PBC to define surface friction has been included in Federal motor vehicle safety standards since the early-1990's and was also used by the U.S. automotive industry prior to that date. Accordingly, the agency proposed that the PBC of the test surface will be measured using the ASTM E1136–93 (Reapproved 2003) standard reference test tire, in accordance with ASTM Method E1337–90 (Reapproved 2002). The GTR maintains an option for Contracting Parties to specify in their respective national regulations the value of PBC for the high-friction dry test surface used for the motorcycle brake system tests.

PBC Measurement Methodology. Three commenters requested that NHTSA allow use of the test vehicle itself to define PBC as described in the GTR. Harley-Davidson requested that the agency reconsider our intent ''to allow only ASTM [E1337–90] to determine road surface peak braking coefficient.''[54] Harley-Davidson stated that, although NHTSA has a history of using the ASTM method, the use of the test vehicle itself to determine wheel lock threshold, as allowed by UNECE Reg. No. 78, is a widely used procedure that is well understood within the motorcycle industry. Harley-Davidson commented that the ASTM method involves the use of additional test equipment, and adds further complexity and costs to the testing process, while NHTSA has acknowledged that the two methods yield comparable results.

The MIC commented that the intention of the GTR was for both the ASTM method and the alternative UNECE Reg. No. 78 method to be

[50] *See, e.g.,* 49 U.S.C. 30165, 30166 (safety standards); 49 U.S.C. 32308, 32309 (consumer information); 49 U.S.C. 32507 (bumper standards); 49 U.S.C. 32706, 32709 (odometer fraud).

[51] National Traffic and Motor Vehicle Safety Act of 1966, Public Law 89–563, 80 Stat. 718 (1966) (now codified, as amended, at 49 U.S.C. 30101 *et seq.*).

[52] FMVSS No. 122 NPRM, 73 FR at 54024.

[53] MIC Comments, Docket No. NHTSA–2008–0150–0017.1 at 3.

[54] Harley-Davidson Comments, Docket No. NHTSA–2008–0150–0012 at 2.

available as test options.[55] The MIC stated that the choice of method should be up to the manufacturer or other testing entity. The MIC also pointed out that in some circumstances, where length and width of the test course are limited, the ASTM E1337–90 method cannot be performed.

Honda expressed a more specific difficulty regarding the PBC measurement. Honda stated that it has utilized a test facility that cannot accommodate the ASTM E1337–90 procedure due to its relatively small size.[56] Honda stated that it would have to move its manpower, vehicles, and testing equipment from its current on-site location to a much more distant one in order to accommodate the ASTM E1337–90 test procedure, and that having to do so would be very burdensome and expensive and could force product development delays. Additionally, Honda stated that moving testing to other Honda facilities would also cause schedule conflicts with testing of other on-road products, and may ultimately force Honda to build additional testing facilities at great expense.

Agency Response: The GTR leaves to individual national legislation the methodology that is selected for measurement of test surface friction. The text of the GTR makes this clear in paragraph 4.1.1.3, *Measurement of PBC,* which states that ''PBC is measured as *specified in national or regional legislation* using either: (a) [the ASTM E1337–90 test method]; or (b) [the UNECE Reg. No. 78 method].'' [57] Similarly, the formal statement of technical rationale and justification that precedes the GTR regulatory text states that the ''Contracting Parties [] agreed to list both methods in the regulatory text of the GTR, but decided to leave it to the national regulations to specify which of the above test methods should be used to measure the PBC.'' [58] The use of the phrase ''which of the above test methods'' in this preamble statement makes clear that the Contracting Parties intended that national regulations adopting the GTR could adopt either of the listed test methods.

Thus, consistent with the GTR, this final rule specifies that measurement of the PBC is conducted in accordance with the ASTM E1337–90 test method, or the first option in paragraph 4.1.1.3 of the GTR, as proposed.[59] NHTSA's selection of the ASTM method represents what we consider to be a well-defined baseline that is appropriate for use in a safety standard. As explained above, other FMVSSs specify the ASTM E1337–90 test method to measure peak braking coefficient. Thus, NHTSA is immediately prepared to start testing in accordance with this test method, as opposed to the UNECE Reg. No. 78 test method. While there may, as a couple commenters noted, be no quantifiable safety benefit to choosing one test method over the other, there is certainly an enforcement concern for the agency, both because NHTSA does not have as much experience conducting PBC measurements for compliance tests using the UNECE Reg. No. 78 test method, and because proving noncompliance is substantially more complicated when the agency provides manufacturers with multiple options for compliance, as explained in section III.B above.

As discussed above in section III.B, Federal motor vehicle safety standards (FMVSSs) do not require manufacturers to test every motor vehicle or piece of motor vehicle equipment to the specifications in each safety standard. The FMVSSs set performance standards that motor vehicles and motor vehicle equipment must meet when tested by the agency in accordance with the test procedures specified in the FMVSS associated with that performance requirement. Neither the National Traffic and Motor Vehicle Safety Act [60] (nor other statutes NHTSA administers) nor NHTSA standards and regulations require that a manufacturer base its certifications on any particular tests, any number of specified tests or, for that matter, any tests at all. A manufacturer is required to exercise due care in certifying its motor vehicles. It is the responsibility of the manufacturer to determine initially what test results, computer simulations, engineering analyses, or other information it needs to enable it to certify that its vehicles comply with applicable Federal safety standards. Thus, manufacturers and test laboratories can use the UNECE Reg. No. 78 method, or another method, for their own certification purposes as long as they can reasonably correlate test results using their chosen method with those using the FMVSS procedure and show that their certification tests provide a sound basis for compliance with the safety standard. The GTR preamble explains that despite the differences in methodology, ''the ABS validation research program demonstrated that, when properly conducted, both methods yield comparable results for evaluating the test surface.'' [61] Thus, it would appear that this approach will not impose a great financial burden on manufacturers. This approach has a longstanding history in brake system compliance tests.

As a practical matter, we note that in the UNECE Reg. No. 78 method, the surface friction coefficient is determined by measuring the maximum braking rate with ABS disabled, for the front wheel and rear wheel brakes applied simultaneously, and with constant brake forces applied throughout the tests. This is not practicable for some ABS-equipped motorcycles where ABS cannot be disabled. This is a particular concern since FMVSS No. 122, under the current amendment, for the first time will include procedures specifically for ABS. For these reasons, this final rule amends FMVSS No. 122 so that it will specify that when NHTSA tests for the performance criteria listed in the standard, PBC will be measured using the ASTM procedure.

Nominal PBC versus PBC. Harley-Davidson urged NHTSA to reconsider the language the agency chose for specifying the PBC measure of the high-friction test surface, stating that the proposed language appears to require an exact PBC measure of 0.9, rather than accepting a ''nominal PBC'' of 0.9.[62] Harley-Davidson commented that it did not understand NHTSA's intent in removing the term ''nominal'' and NHTSA's reference to ''objectivity,'' other than as a desire for the agency to maintain consistency with other NHTSA safety standards. Harley-Davidson went on to state:

[55] MIC Comments, Docket No. NHTSA–2008–0150–0017.1 at 1.

[56] Honda Comment, Docket No. NHTSA–2008–0150–0018.1 at 2. Honda gave no further details, but we assume the inability of its test facility to accommodate the ASTM E1337–90 method has to do with the additional track length needed to get a skid trailer up to the test speed of 64 km/h and maintain that speed while braking the trailer's test wheel, compared to the relatively shorter distance required to do the same from 60 km/h with a test motorcycle while braking it to a stop.

[57] *See Global Technical Regulation No. 3, Amendment 1, Motorcycle Brake Systems,* U.N. Doc. ECE/TRANS/180/Add.3/Amend.1 (July 31, 2008); *Global Technical Regulation No. 3, Motorcycle Brake Systems,* U.N. Doc. ECE/TRANS/180/Add.3 (Dec. 21, 2006), *available at http://www.unece.org/trans/main/wp29/wp29wgs/wp29gen/wp29registry/gtr3.html* (last accessed April 27, 2010).

[58] *Global Technical Regulation No. 3, Motorcycle Brake Systems,* U.N. Doc. ECE/TRANS/180/Add.3 at 11 (Dec. 21, 2006).

[59] *See* proposed paragraph S6.1.1.3. FMVSS No. 122 NPRM, 73 FR at 54039.

[60] National Traffic and Motor Vehicle Safety Act of 1966, Public Law 89–563, 80 Stat. 718 (1966) (now codified, as amended, at 49 U.S.C. 30101 *et seq.*).

[61] *Global Technical Regulation No. 3, Motorcycle Brake Systems,* U.N. Doc. ECE/TRANS/180/Add.3 at 11 (Dec. 21, 2006).

[62] Harley-Davidson Comments, Docket No. NHTSA–2008–0150–0012 at 2–3.

Measures of PBC are meant to be a statement of a current condition on a particular section of road. They are reported as an average of measures and, in the case of ASTM E1337–90, as an average of averages. Such a report is in the nature of ''nominal'' as we understand the term. We are uncertain whether NHTSA is effectively proposing to require vehicle manufacturers to expend extra resources to develop the entire test surface to attain an actual PBC of 0.9 rather than accepting a report of the nominal condition of the same test surface.

Harley-Davidson also quoted a discussion that was included in the technical rationale accompanying the GTR, at section 5.2.7.1, which lays out in detail the reasons why the GTR specifies a nominal PBC of 0.9 rather than an exact value.

Honda also commented on this issue. Honda stated that ''[i]t is difficult to maintain the PBC equal to exactly 0.9, and the parties which contributed to the GTR discussed this issue many times, agreeing to allow for slight variances.'' [63] Honda stated that referring to an exact PBC value would result in an unnecessary testing burden for which there will be no safety benefit. Honda suggested that, should NHTSA deem it necessary to specify a tolerance to improve objectivity, such a tolerance should be included in the FMVSS No. 122 Test Procedure.[64]

The MIC comment raised similar concerns, saying that testing costs will go up rather than be decreased, as described as a goal of the proposal, if the required PBC is set at exactly 0.9.[65] The MIC stated:

We agree that objectivity is desirable if the inclusion of an absolute is useful. However, in this application we do not believe it is either useful or desirable. It's difficult to set the PBC equal to 0.9 and this is recognized in the GTR that describes the attributes of the high-friction brake surface as having ''a nominal peak braking coefficient (PBC) of 0.9.'' We are not suggesting a specific tolerance, but believe nominal, based on best engineering practices, is essential to satisfactorily perform the test or achieve repeatability and should not have been deleted from the GTR language.

Agency Response: Inclusion of the ''nominal'' descriptor in specifying the PBC of the test surface is unacceptable from a compliance standpoint because it represents an unstated range of values. Specifying ''nominal PBC'' fails to limit the friction coefficient in an objective or useful way. Under the National Traffic and Motor Vehicle Safety Act, FMVSSs prescribed by NHTSA must be ''stated in objective terms.'' [66]

The agency's intent is not to require that high-friction brake tests be conducted only on surfaces with a PBC of exactly 0.9. Rather, the intent is to set a target PBC that acts as a reference point. In this way, those who are involved with brake system development, such as motorcycle manufacturers, can use test surfaces with any PBC below 0.9 in order to ensure compliance at least at the 0.9 level.[67] On the other hand, NHTSA, and laboratories conducting compliance tests, would use surfaces having a PBC of 0.9 or somewhat greater to allow a reasonable margin for friction variations and other test surface variables. As such, manufacturers are provided notice regarding what is required under the standard.

Keeping in mind that FMVSS are established to set *minimum* performance requirements, manufacturers presumably would want to design to a level that exceeds the minimum.[68] We believe specifying a PBC of 0.9 without further qualification is the best way to identify exactly what the safety standard requires and to eliminate the need for interpretation as to what is expected for compliance.

This approach of specifying an unqualified PBC is consistent with how surface peak friction coefficients are specified in FMVSS No. 121, *Air Brake Systems,*[69] FMVSS No. 135, *Light Vehicle Brake Systems,*[70] and in FMVSS No. 126, *Electronic Stability Control Systems.*[71] FMVSS No. 126 mandates Electronic Stability Control (ESC) systems on light vehicles, and establishes test procedures to ensure that ESC systems meet minimum requirements. In the rulemaking that established FMVSS No. 126, NHTSA originally proposed a tolerance around the surface PBC specification, but ultimately specified simply a PBC of 0.9 for the test surface in the final rule.[72] The agency explained that, although the proposed tolerance was an attempt to increase objectivity, such a tolerance created the possibility of compliance tests for FMVSS No. 126 being performed on lower friction coefficient surfaces than those for other braking standards, which is not the intention. NHTSA explained that while it is unlikely that any facility has a surface with exactly that friction coefficient, compliance testing for other braking standards is performed on a surface with a PBC/PFC slightly higher than the specification, i.e., slightly less-slippery than the surface required, which creates a margin for clear enforcement. Here, as in the ESC final rule, we will continue to use consistent compliance test conventions across all FMVSSs, and specify an unqualified surface PBC.

E. Test Sequence

The NPRM proposed a specific testing order to eliminate any potential effect of the test sequence on braking performance and to harmonize with the GTR. The proposed sequence was selected based on increasing severity of the test on the motorcycle and its brake components, in order to preserve the condition of the brakes.

The current FMVSS No. 122 specifies a particular sequence in which tests should be conducted, ending with the wet brake test. The fade test would have the greatest effect on the condition of the motorcycle brakes, which could affect brake performance in subsequent tests. For this reason, current FMVSS No. 122 specifies that a re-burnishing be conducted after the fade test, to refresh the brake components. In order to eliminate the need for re-burnishing, the GTR specifies that the fade test be the last of the motorcycle brake system performance tests.

The ABS test would be the next most severe test, which will result in braking at or near the limits of traction. Thus, the GTR specifies that the ABS test would precede the fade test, for motorcycles equipped with ABS. The remaining tests are not as severe on the brake system and tires, therefore the GTR sequenced them according to increasing test speed for the dry stop

[63] Honda Comment, Docket No. NHTSA–2008–0150–0018.1 at 2.

[64] For each FMVSS, NHTSA's Office of Vehicle Safety Compliance (OVSC) publishes detailed Laboratory Test Procedures for the purpose of providing guidelines for obtaining data in OVSC compliance testing programs and a uniform data recording format for NHTSA contractor laboratories. *See http://www.nhtsa.gov/Vehicle+Safety/Test+Procedures* (last accessed April 29, 2010). In the near future, NHTSA will likely revise the FMVSS No. 122 Test Procedure in accordance with this final rule.

[65] MIC Comments, Docket No. NHTSA–2008–0150–0017.1 at 1–2.

[66] 49 U.S.C. 30111(a). *See Chrysler Corp.* v. *NHTSA,* 472 F.2d 659, 675 (6th Cir. 1972) (discussing Congressional intent and explaining that ''objective criteria are absolutely necessary so that the question of whether there is compliance with the standard can be answered by objective measurement and without recourse to any subjective determination'').

[67] Surfaces with lower coefficients of friction are more slippery than surfaces with higher friction coefficients, and thus provide lower levels of braking force and poorer directional stability and control during braking.

[68] *See* 49 U.S.C. 30102(a)(8) (defining ''motor vehicle safety standard'' as a ''minimum standard for motor vehicle or motor vehicle equipment performance'').

[69] *See* 49 CFR 571.121, S5.3.1.1, S5.3.6.1, S6.1.7.

[70] *See* 49 CFR 571.135, S6.2.1.

[71] *See* 49 CFR 571.126, S6.2.2.

[72] *Federal Motor Vehicle Safety Standards, Electronic Stability Control Systems, Controls and Displays; Final Rule,* 72 FR 17236, 17267–17268 (2007).

performance tests, followed by the wet brake performance test. Consistent with the GTR, we proposed to specify the test sequence using a table in the regulation. The proposed test sequence table was identical to Table 1 here.

TABLE 1—PROPOSED TEST SEQUENCE

Test order	Paragraph
1. Dry stop—single brake control actuated	S6.3
2. Dry stop—all service brake controls actuated	S6.4
3. High speed	S6.5
4. Wet brake	S6.6
5. Heat fade*	S6.7
6. If fitted:	
6.1. Parking brake system	S6.8
6.2. ABS	S6.9
6.3. Partial failure, for split service brake systems	S6.10
6.4. Power-assisted braking system failure	S6.11

*Heat fade is always the last test to be carried out.

Harley-Davidson and the MIC both stated that the test sequence in Table 1 would be clearer if the procedures listed as items No. 5 and No. 6 were reversed.[73] They suggested that the heat fade test, listed as No. 5 in Table 1, should be listed last since it is always the last test in the sequence, even if procedures under No. 6 are required.

Agency Response: We note that the order in which the test procedures were listed in Table 1 corresponded to the paragraph number sequence of the regulatory text of the proposed safety standard. Also, the procedures listed under No. 6 in Table 1 are required only for certain equipment which may not be fitted to the test motorcycle, e.g., a parking brake or power-assisted brakes. Nevertheless, we agree it is clearer if the procedures appear in Table 1 in the same order in which they are to be performed. Therefore, we are changing the table in the regulatory text as requested, by putting the Heat Fade test at the end of the list. Table 2 illustrates how the table appears in the final regulatory text, which is referred to in paragraph S6.1.7, *Test Sequence.*

TABLE 2—TEST SEQUENCE SPECIFIED IN FINAL REGULATORY TEXT

Test order	Paragraph
1. Dry stop—single brake control actuated	S6.3
2. Dry stop—all service brake controls actuated	S6.4
3. High speed	S6.5
4. Wet brake	S6.6
5. If fitted:	
5.1. Parking brake system	S6.8
5.2. ABS	S6.9
5.3. Partial failure, for split service brake systems	S6.10
5.4. Power-assisted braking system failure	S6.11
6. Heat fade	S6.7

F. Brake Application Force Measurement

Controls for the application of the brakes can include hand and foot actuated control levers. The various national standards and regulations have slightly different brake control input force limits, and in the case of a hand actuated control lever, there is also a discrepancy as to the location of application of the input force. One consistent element is the location and direction of application of the input force to the foot actuated lever (i.e., pedal). Consistent with the GTR, the NPRM proposed input forces for each test in accordance with the national regulation on which the individual test is based, to minimize confusion. The respective input forces are noted in Table 3. A discussion on brake control actuation force specifications for evaluating motorcycles equipped with ABS is provided below in paragraph IV.G.

TABLE 3—INPUT FORCES ON HAND AND FOOT ACTUATED BRAKE CONTROL LEVERS

Regulation	Foot control, F_P (N)	Hand control, F_L (N)
FMVSS No. 122	$25 < F_P < 400$	$10 < F_L < 245$
UNECE Regulation No. 78/JSS 12–61	$F_P < 350$	$F_L < 200$

As discussed in the NPRM, with respect to the location of the input force on the hand-controlled lever, in developing the GTR, there was agreement that none of the three national regulations is clear enough with respect to measuring the location of the input force on the hand-controlled lever. In an effort to define a common practice, the GTR includes a revised description for the location of the input force on the control lever and its direction of application, based on ISO 8710:1995, *Motorcycles—Brakes and braking devices—tests and measurement methods.* Consistent with the GTR, the NPRM proposed the GTR's harmonized specification of input force in proposed paragraph S6.2.3. NHTSA is adopting this specification as proposed since no commenter mentioned this proposed requirement.

Finally, for those motorcycles that use hydraulic fluid for brake force transmission, the GTR stipulates that the master cylinder shall have a sealed, covered, separate reservoir for each brake system. This includes one or more separate reservoirs located within the same container, such as commonly found on passenger cars. Such containers may only have one sealed, covered filling cap. The proposed rule incorporated these hydraulic service brake system requirements in paragraph S5.1.9. Since no commenter mentioned this proposed regulatory text, we are adopting these provisions as proposed.

G. Brake Temperature Measurement

Brake test requirements typically specify that initial brake temperature (IBT) be measured at the start of each braking performance run to enhance test repeatability. The two measurement methods that are generally used in brake standards and regulations worldwide include (1) the use of plug-type thermocouples, and (2) the use of rubbing-type thermocouples. We proposed to retain the plug-type thermocouples brake temperature measurement method in FMVSS No. 122.

The two methods of measuring the IBT were included in the GTR and each Contracting Party could specify which temperature measurement would be accepted in its national regulation.

[73] MIC Comments, Docket No. NHTSA–2008–0150–0017.1 at 3; Harley-Davidson Comments, Docket No. NHTSA–2008–0150–0012 at 5.

FMVSS No. 122, as well as all the other brake standards in the Federal motor vehicle safety standards, currently specifies the plug-type thermocouple for measuring the initial brake temperature. NHTSA does not have experience using the rubbing-type thermocouple either in brake research or compliance testing. Given the limitations of the rubbing-type thermocouple described in the NPRM, we continue to believe that the plug-type thermocouple would be the more effective option for measuring IBT in the updated FMVSS No. 122. We did not receive any comment on this aspect of the proposal. Therefore, as in current FMVSS No. 122 and as in the proposed rule, updated FMVSS No. 122 will specify that initial brake temperature is measured by plug-type thermocouples.

With respect to the actual brake temperature values specified for testing purposes, consistent with the GTR, the NPRM proposed that FMVSS No. 122 specify as a test condition an IBT between 55 °C and 100 °C in order to encompass all brake systems. Since no commenter addressed this proposed test condition, today's final rule continues to specify this IBT range as a test condition for each test procedure for the reasons explained in the NPRM.

H. Burnishing Procedure

The current FMVSS No. 122 includes a burnishing procedure. In order to harmonize with the GTR, we proposed a slight variation of the current procedure, to include some aspects of procedures currently used by motorcycle manufacturers in preparation for UNECE Regulation No. 78/JSS 12–61 type approval testing.

The burnishing procedure serves as a conditioning of the foundation brake components to permit the brake system to achieve its full capability. Burnishing typically matches the friction components to one-another and results in more stable and repeatable stops during testing. All Federal motor vehicle safety standards for brake systems (FMVSS Nos. 105, 121, 122, and 135) currently include a burnishing procedure. The burnishing procedure of current FMVSS No. 122 specifies 200 stops with both brakes applied simultaneously, decelerating from a speed of 30 mph at 12 fps^2 with an IBT between 55 °C and 65 °C (130 °F and 150 °F).

As explained in the NPRM, the burnishing procedure in the GTR is based on FMVSS No. 122, but also includes some aspects of procedures currently used by motorcycle manufacturers in preparation for UNECE Regulation No. 78/JSS 12–61 type approval testing. For example, the GTR specifies burnishing the brakes separately since this would result in a more complete burnish for both front and rear brakes, as compared with the current FMVSS No. 122 method of using both brakes simultaneously. Hence, consistent with the GTR, the proposed rule specified that each brake be burnished for 100 decelerations.

Harley-Davidson commented that it may not be possible or necessary in the case of combined or split-service brake systems to actuate each brake separately for the burnishing procedure of the proposed rule.[74] Harley-Davidson, thus, recommended appending language such as ''unless a split service or combined brake system is present'' to the S6.2.5.2(c) burnishing test procedure specification.

Agency Response: The test condition specification in proposed paragraph S6.2.5.2(c) (*Brake application*) stated, ''Each service brake system *control* actuated separately.'' It did not say that the front and rear brakes have to be applied separately. The proposed language accurately conveys the intent of the requirement, which is that each control, if there is more than one control on the motorcycle, be actuated independently of any other brake controls.

The language suggested by Harley-Davidson would not account for combined brake systems having both hand lever and foot pedal controls. Under the procedure in S6.2.5.2(c), such a system would be burnished by applying the front lever of the CBS-equipped system (which could apply both front and rear brakes to varying degrees, depending on the CBS design) in a series of 100 stops, and then the burnishing would be repeated using the rear lever or pedal of the CBS-equipped system (which also could apply both front and rear brakes to varying degrees, depending on the CBS design) in a second series of 100 stops.

The intent of the contracting parties in developing separate burnish for front and rear brakes was to ensure a more complete burnish compared with the current FMVSS No. 122 where a 200-stop burnish procedure is required with simultaneous application of both brake controls. The current burnish procedure results in more variability of the brake burnish since the test rider determines the mix of front to rear brake forces used to attain the specified deceleration level during the burnish stops. The GTR burnish procedure ensures a more complete burnish for both brakes since each brake control is used separately. We are aware that for CBS-equipped motorcycles, the burnish procedure may provide a slightly higher level of burnish since a portion of the front and rear foundation brakes may be activated by both the hand lever and the foot pedal.

NHTSA believes that the language of the proposed procedure in S6.2.5.2(c) is consistent with our intent, and therefore, we elect not to modify the proposal as requested in this comment. Since no commenter mentioned any other aspect of the proposed burnishing procedure, we are adopting the burnishing procedure as proposed, for the reasons explained here and in the NPRM.[75]

I. Notice of Wear

The NPRM proposed the GTR requirement that ''friction material thickness shall be visible without disassembly, or where the friction material is not visible, wear shall be assessed by means of a device designed for that purpose.''[76] Current FMVSS No. 122 requires that the ''brake system [ ] be installed so that the lining thickness of drum brake shoes may be visually inspected, either directly or by use of a mirror without removing the drums, and so that disc brake friction lining thickness may be visually inspected without removing the pads.''[77] Allowing wear of friction material thickness to be assessed either visually or by means of a device increases design freedom while serving the same purpose of indicating friction material wear, without the need for disassembly. We did not receive comment on this aspect of the proposal and, therefore, are adopting this requirement as proposed.

IV. Specific Performance Test Improvements to FMVSS No. 122

Here, we discuss the proposed specific test procedures and performance criteria improvements to FMVSS No. 122, any comments received on these proposed improvements, and the agency's response to those comments. Where no comments were received on a proposed test procedure or performance criteria, or a certain aspect of those requirements, NHTSA has generally adopted those proposals in accordance with the rationale detailed in the NPRM. Although this final rule states as such for each amendment, we generally will not repeat the rationale and justification for aspects of the proposal that did not receive comment. We refer readers to

[74] Harley-Davidson Comments, Docket No. NHTSA–2008–0150–0012 at 4.

[75] *See* FMVSS No. 122 NPRM, 73 FR at 54026.

[76] *See* FMVSS No. 122 NPRM, 73 FR at 54038.

[77] 49 CFR 571.122, S5.1.5, *Other requirements.*

the NPRM for the basis for those amendments.[78]

A. Dry Stop Test—Single Brake Control Actuated

This final rule is adopting the proposed provision for a dry stop test with single brake control that is based on UNECE Regulation No. 78 and JSS 12–61 tests.[79] Currently, FMVSS No. 122 does not have a requirement that tests each brake system separately except for tests with the brakes in a pre-burnished condition. All other tests with the brake system fully operational require front and rear brake application simultaneously. In the main FMVSS No. 122 dry stop test with both brake controls actuated simultaneously, the test rider judges how to apportion the actuation force to the front and rear brakes. This may give less repeatable test results or allow the test rider to compensate for a ''weak'' brake. As such, an additional test specifying that each brake be tested individually will improve FMVSS No. 122.

The purpose of a dry stop test requirement with the separate actuation of each brake control is to ensure a minimum level of motorcycle braking performance on a dry road surface for each independent brake system. Current FMVSS No. 122 performance requirements are quite different as they specify motorcycles be tested in what is effectively the lightly-loaded condition,[80] and with all brake controls actuated simultaneously. The exception is the pre-burnish test requirements, which specify that each independently actuated service brake system must be capable of stopping the motorcycle (in effectively the lightly-loaded condition) within specified stopping distances.

The MIC and Harley-Davidson each pointed out in their comments that the proposed specification of brake actuation force for the single brake control actuated dry stop test in the NPRM regulatory text appeared to be missing a force value for motorcycle category 3–4 (proposed paragraph S6.3.2(d)(2)(ii)).[81] They pointed out that this test procedure specification should read ''≤ 500 N for motorcycle category 3–4'' instead of ''≤ for motorcycle category 3–4.'' No other commenter mentioned this proposed test procedure.

Agency Response: We agree with the commenters that the force value was missing from the paragraph S6.3.2(d)(2)(ii) test procedure specification. Consistent with the GTR, we have revised this paragraph to specify a foot control brake actuation force of 500 N for category 3–4 motorcycles. Since no commenter disagreed with the adoption of the proposed single brake control-actuated dry stop test, this final rule includes the dry stop test with single brake control based on UNECE Regulation No. 78/JSS 12–61 requirements, for the reasons explained in the NPRM. Unlike present UNECE/JSS standards, the requirement will specify only stopping distance as the measurement criterion and will not include MFDD as an optional criterion. When NHTSA conducts compliance testing, we will use stopping distance as the performance measure.

B. Dry Stop Test—All Service Brake Controls Actuated

This final rule is also adopting the proposed provision to test the service brakes with both brake controls applied simultaneously, which is very similar to the current FMVSS No. 122 dry stop test with both brake controls applied simultaneously. The purpose of this test with all service brake controls actuated is to evaluate the full braking performance of motorcycles from a speed of 100 km/h with both front and rear brakes applied simultaneously. These test parameters are relevant since they represent the typical operating conditions of a motorcycle with a single rider traveling at highway speeds. In addition, testing in the lightly loaded condition with a full brake application helps to evaluate motorcycle stability during braking. Since we did not receive comments on this performance test, this final rule is adopting this test procedure and performance criteria as proposed, for the reasons explained in the NPRM.

C. High-Speed Test

We are also adopting the proposed high-speed test, for the reasons largely explained in the NPRM. The purpose of the high-speed test is to evaluate the full braking performance of the motorcycle from a high speed and with both front and rear brakes applied simultaneously. The test is performed from a speed of 160 km/h or 0.8 of the vehicle's maximum speed (Vmax), whichever is less.

Based on the NHTSA/Transport Canada Review of Motorcycle Brake Standards,[82] it was determined during development of the GTR that 100 mph (160 km/h) or 0.8 Vmax is adequate for a high speed effectiveness test since the benefits of testing from higher speeds do not warrant the potential hazard to which the test rider is exposed. Consistent with the GTR, the high-speed test procedure specified in this final rule limits the test speed to 160 km/h to address test facility limitations and safety concerns. As proposed, this final rule also specifies that the high speed test be conducted with the motorcycle engine connected, i.e., with the clutch engaged, and the transmission in the highest gear, which has the effect of enhancing motorcycle stability during braking from high speeds.

The MIC noted a typographical error in the proposed regulatory text for the high-speed test in the specification for the initial brake temperature measurement.[83] The MIC correctly noted that, consistent with the GTR, the initial brake temperature should be specified as ''≥ 55 °C and ≤ 100 °C.''

Agency Response: We agree with the MIC that there was a typographical error in the proposed initial brake temperature test condition in the high-speed test procedure regulatory text, and that it should read as quoted above. The proposed regulatory text used two greater than or equal to symbols, instead of one greater than or equal to symbol, and one less than or equal to symbol. For the reasons explained above and in the NPRM, we are adopting the high-speed test procedure and performance criteria as proposed, with the correction noted above.

D. Wet Brake Test

This final rule is also adopting the proposed wet brake test provision, which differs from the current FMVSS No. 122 wet brake test in that instead of submerging the brake system in water and then testing the brakes, the water is sprayed directly onto the brakes during the test. This procedure is based on UNECE Regulation No. 78 and JSS 12–61, which the reviews of motorcycle

[78] *See* FMVSS No. 122 NPRM, 73 FR at 54023–54027.

[79] *See* FMVSS No. 122 NPRM, 73 FR at 54027.

[80] As mentioned above, current FMVSS No. 122 specifies that performance requirements must be met when the ''motorcycle weight is unloaded vehicle weight plus 200 pounds.'' 49 CFR 571.122, S6.1. ''Unloaded vehicle weight'' is defined under 49 CFR 571.3(b) to mean ''the weight of a vehicle with maximum capacity of all fluids necessary for operation of the vehicle, but without cargo, occupants, or accessories that are ordinarily removed from the vehicle when they are not in use.'' This current FMVSS No. 122 test mass condition is effectively equivalent to the mass condition ''lightly loaded'' in the proposed rule. Lightly loaded means the sum of unladen vehicle mass (mass of the vehicle with bodywork and all factory fitted equipment, and fuel tanks filled to at least 90 percent) and driver mass ''plus 15 kg for test equipment, or the laden condition, whichever is less.'' 73 FR 54020, 54037 (proposed FMVSS No. 122 S4, *Definitions*).

[81] MIC Comments, Docket No. NHTSA–2008–0150–0017.1 at 3; Harley-Davidson Comments, Docket No. NHTSA–2008–0150–0012 at 5.

[82] *See* Docket Nos. NHTSA–2008–0150–0005.1, NHTSA–2008–0150–0006.1.

[83] MIC Comments, Docket No. NHTSA–2008–0150–0017.1 at 3.

brake standards found to be more stringent than current FMVSS No. 122. Accordingly, we believe that motorcycle brake safety will be enhanced as a result of this change in wet brake test procedure. The purpose of the wet brake test is to ensure a minimum level of braking performance when the motorcycle is ridden in heavy rain conditions.

The wet brake performance evaluation specified in this final rule begins with a baseline test where each brake is tested separately and is required to decelerate a laden motorcycle at a specified rate, using the conditions of the dry stop test—single brake control actuated. For comparison, the same test is then repeated, but with a constant spray of water to wet the brakes. The difference in performance is evaluated immediately after the application of the respective brake, to ensure a minimum rise in deceleration performance with wet brakes. In addition, a drying brake can sometimes result in an excessively high pad friction leading to motorcycle instability and wheel lock; therefore a check for this ''over recovery'' is also included. Since we did not receive comments on this performance test, this final rule is adopting this test procedure and performance criteria as proposed, for the reasons explained here and in the NPRM.

E. Heat Fade Test

We are also adopting the proposed heat fade test provision, which is based on the UNECE Regulation No. 78 and JSS 12–61 fade test. As explained in the NPRM, the results from both stringency studies indicated that this fade test is more stringent than the current FMVSS No. 122 fade test. The heat fade test ensures that a minimum level of braking performance is maintained after numerous consecutive brake applications. In terms of real world conditions, this could be akin to frequent braking while driving in a busy suburban area or on a downhill gradient.

The adopted heat fade test requires that the brakes be tested separately, with the motorcycle loaded to its maximum mass capacity. The test begins with a baseline test with an IBT between 55 °C and 100 °C, which provides the benchmark for performance comparison and evaluation of the heated brakes. This is followed by 10 consecutive fade stops with the purpose of building heat within the brakes. The final performance test occurs with one stop immediately following the 10 fade stops. To evaluate brake fade performance, the procedure compares the stopping distance for the same brake pedal and lever actuation forces as used in the baseline test.

Minor adjustments were made to the UNECE Regulation No. 78 and JSS 12–61 fade test. The text for the performance criteria was revised to use the average brake control force from the baseline test, calculated from the measured values between 80 percent and 10 percent of the specified vehicle test speed. The brake heating procedure was also made more objective. UNECE Regulation No. 78 presently requires that the motorcycle decelerate to the lesser of 3 meters per second squared (m/s^2) or the maximum achievable deceleration rate with that brake control. For the purposes of the GTR, the latter performance requirement is made more objective by specifying that, at a minimum, the motorcycle must meet the deceleration rate for the dry stop test—single brake control actuated, as noted in Table 2 of the regulatory text. As noted above in section IIIB, this is different from MFDD.

Since we did not receive comments on this performance test, this final rule is adopting the heat fade test procedure and performance criteria as proposed, for the reasons explained here and in the NPRM.

F. Parking Brake System Test

This final rule is adopting the proposed parking brake test, which will improve upon the current FMVSS No. 122 parking brake system test by specifying a more stringent loading condition. The purpose of the parking brake system performance requirement is to ensure that motorcycles required to be equipped with parking brakes can remain stationary without rolling away when parked on an incline.

Consistent with the GTR, the test adopted in this final rule specifies that the parking brake system be capable of holding the motorcycle stationary for five minutes when tested in the laden condition (i.e., the maximum weight limit specified by the manufacturer) on an 18 percent grade, in both the forward and reverse directions (to the limit of traction of the braked wheels). In addition, like current FMVSS No. 122, the amended test procedure requires that the parking brake system be designed to retain engagement solely by mechanical means.

Honda noted that, in adopting section 4.8.3 of the GTR regulatory language on parking brakes, NHTSA's proposal parenthetically added ''to the limits of traction of the braked wheels'' to the performance requirements in paragraph S6.8.3 of the proposed FMVSS No. 122 regulatory text.[84] Honda suggested that this additional language would be more appropriately included in the parking brake test procedure, or section S6.8.2 of the regulatory text. The MIC made a similar comment.[85]

Agency Response: We agree that the added text would be more appropriately included in S6.8.2 rather than paragraph S6.8.3, as in the proposal. The regulatory text of the final rule reflects this change with the insertion of a new subparagraph under S6.8.2 (test conditions and procedures for parking brake system test) which states: ''The motorcycle must remain stationary to the limits of traction of the braked wheels.'' For the reasons explained above and in the NPRM, we are adopting the parking brake system test procedure and performance criteria as proposed, with the minor rearrangement of language noted here.

G. Antilock Brake System (ABS) Performance Test

Today's final rule does not require ABS but does contain ABS minimum performance requirements for motorcycles that are voluntarily equipped with this type of brake system. The purpose of the specified ABS test procedures is to assess the stability and stopping performance of a motorcycle with the ABS functioning.

These new tests, adopted from the GTR, include stopping distance performance requirements on high and low friction surfaces, wheel lock tests on high and low friction surfaces, and wheel lock tests for high to low friction and low to high friction surface transitions. In addition, the new performance requirements include an ABS failed systems performance test. Current FMVSS No. 122 does not include any ABS-specific performance requirements.

In the NPRM, NHTSA explained that we believe the ABS definition developed for the GTR is not as comprehensive as NHTSA's ABS definition which appears in three other Federal motor vehicle safety standards: FMVSS No. 105, *Hydraulic and Electric Brake Systems;* FMVSS No. 121, *Air Brake Systems;* and FMVSS No. 135, *Light Vehicle Brake Systems.* The two definitions are presented below:

- GTR Definition: *Antilock brake system* or *ABS* means a system which senses wheel slip and automatically modulates the pressure producing the braking forces at the wheel(s) to limit the degree of wheel slip.

[84] Honda Comments, Docket No. NHTSA–2008–0150–0018.1 at 2–3.

[85] MIC Comments, Docket No. NHTSA–2008–0150–0017.1 at 2.

• The current FMVSS Definition: *Antilock brake system* or *ABS* means a portion of a service brake system that automatically controls the degree of rotational wheel slip during braking by:

(1) Sensing the rate of angular rotation of the wheels;

(2) Transmitting signals regarding the rate of wheel angular rotation to one or more controlling devices which interpret those signals and generate responsive controlling output signals; and

(3) Transmitting those controlling signals to one or more modulators which adjust brake actuating forces in response to those signals.

The NPRM explained that we believe both definitions can be interpreted to mean the same thing. The NPRM sought comment on the proposed GTR definition and on the ABS definition used in the other braking standards. Since we did not receive comment on the definition of ABS, we are adopting the GTR definition, as proposed. However, we continue to believe that this is consistent with other FMVSSs, as both definitions above can be interpreted to mean the same thing.

During the development of the GTR, each of the ABS performance tests and their corresponding requirements was reviewed to assess their appropriateness for the proposed motorcycle brake system GTR.[86] This analysis is discussed in the NPRM and will not be repeated here except to the extent that it relates to comments received on the proposed ABS test procedures and performance criteria. Commenters were generally supportive of the adoption of the proposed ABS test procedures. Therefore, with the exception of the minor changes discussed below, we are adopting the ABS test procedures and performance criteria for the reasons explained here and in the NPRM.[87]

1. Low Friction Surface for ABS Testing

The proposed ABS test procedures included a wheel lock check and stopping distance performance requirement on a low friction surface, and wheel lock checks on a high-to-low and low-to-high surface transitions.[88] Harley-Davidson commented that the test tracks it utilizes to certify ABS systems rely upon water delivery to reduce the surface friction to the required level for the low friction surface tests.[89] Harley-Davidson expressed concern that the proposed regulatory text stated in paragraph S6.1.1.3 that the ASTM procedure to measure PBC be conducted ''without water delivery.'' Harley-Davidson stated that modifications needed to create a dry low friction surface would be costly and requested that NHTSA permit use of a wet surface as an alternative means of achieving the low friction surface test conditions.

Agency Response: It was not our intention to prevent use of a wetted surface for the low friction portion of the ABS test sequence. Paragraph S6.1.1.3 describes how the PBC of a dry surface is measured using the ASTM procedure but did not consider the need for measuring a wetted surface. We have deleted the phrase ''without water delivery'' from the S6.1.1.3 test procedure to allow for the use of either wet or dry low friction surfaces. We note that the description of a low friction surface (S6.1.1.2) states that it must be a ''clean and level surface,'' which allows it to be wetted, as compared with the description of the high friction surface (S6.1.1.1) which must be a ''clean, dry and level surface''.

2. Wheel Lock

Harley-Davidson pointed out in its comments that various performance requirements in the proposed ABS tests section (S6.9) prohibit wheel lock, but paragraph S6.9.1(d) specifies that wheel lock is allowed ''as long as the stability of the vehicle is not affected to the extent that it requires the operator to release the control or causes the vehicle to pass outside the test lane.'' [90] Harley-Davidson commented that it is unclear if the same language permitting limited wheel lock in S6.9.1(d) is implied in the subsequent procedures where it is stated that wheel lock shall not occur. Harley-Davidson requested that, if section S6.9.1(d) is in fact intended to define the term ''wheel lock'' generally for the whole safety standard, then the ''Wheel Lock'' definition in section S4 of the rule should be modified appropriately. The MIC also noted that the description of the term ''wheel lock'' in S6.9.1(d) is confusing given its use in subsequent paragraphs of S6.9.[91]

Agency Response: The limitation on ''wheel lock'' given in paragraph S6.9.1(d) is meant to apply to all of the ABS test procedures of section S6.9. NHTSA's intention was to permit in each of the test procedures the small degree of wheel lock that is typical of ABS operation, but to prohibit any greater degree of wheel lock. As explained in the NPRM, ''the regulatory text includes that wheel lock is allowed as long as the stability of the motorcycle is not affected to the extent that it requires the operator to release the control or causes the motorcycle to pass outside the test lane.'' [92] What NHTSA meant there was that in each of the S6.9 ABS test procedures (i.e., in S6.9.3, S6.9.4, S6.9.5, S6.9.6, and S6.9.7) where it specifies ''there shall be no wheel lock,'' the limited degree of wheel lock allowed for in S6.9.1(d) is permitted. To make this clearer, we have modified the appropriate text of each of those procedures as follows (added text is italicized): ''There shall be no wheel lock *except as provided in section S6.9.1(d)* and the vehicle wheels shall stay within the test lane.''

However, we disagree with Harley-Davidson's suggestion that the definitional language associated with wheel lock in section S6.9.1(d) should be added to the general definition of wheel lock in section S4 of FMVSS No. 122. The limited wheel lock allowed specifically in ABS tests is not allowable in other brake test procedures in the safety standard, particularly where a motorcycle is not equipped with ABS. Therefore, we are not amending the definition of the term ''Wheel Lock'' in section S4 of the regulatory text.

3. Tests With ABS Electrical Failure

As noted above, the proposed ABS performance tests included a test procedure to measure performance in the event of ABS electrical failure. Harley-Davidson pointed out in its comments that proposed section S6.9.8, *Stops with an ABS electrical failure,* requires the same test procedure as section S6.3, *Dry Stop Test—Single brake control actuated,* in the test sequence laid out in the FMVSS No. 122 proposal.[93] Harley-Davidson stated that, for a motorcycle with optional ABS, a test conducted under section S6.3 on a non-ABS-equipped version of the motorcycle is equivalent to a test conducted under section S6.9.8 on the motorcycle's ABS-equipped counterpart. Harley-Davidson requested that NHTSA permit the result of the S6.3 test be used for the S6.9.8 test, i.e., to allow non-ABS portions of the test sequence to be used to certify both non-

[86] *See* Docket No. NHTSA–2008–0150–0009.1.

[87] *See* FMVSS No. 122 NPRM, 73 FR at 54030–54032.

[88] *See* FMVSS No. 122 NPRM, 73 FR at 54042.

[89] Harley-Davidson Comments, Docket No. NHTSA–2008–0150–0012 at 3.

[90] Harley-Davidson Comments, Docket No. NHTSA–2008–0150–0012 at 4.

[91] MIC Comments, Docket No. NHTSA–2008–0150–0017.1 at 3.

[92] *See* FMVSS No. 122 NPRM, 73 FR at 54031.

[93] Harley-Davidson Comments, Docket No. NHTSA–2008–0150–0012 at 3–4.

ABS and ABS versions of the same motorcycle.

Agency Response: We are adopting the ABS electrical failure test procedure as proposed. The tests in S6.9.8 and S6.3 would be redundant only if ABS-equipped and non-ABS-equipped versions of a motorcycle were otherwise identical and, only if they have identical braking performance under ABS-disabled conditions. Although Harley-Davidson's products may fit this description, it is not necessarily true for all manufacturers. A manufacturer may decide at its own discretion to certify a motorcycle to section S6.9.8 based upon results of tests conducted under section S6.3, but we do not believe these circumstances are necessarily typical.

Furthermore, there is the question of test sequencing. A manufacturer has to certify that an ABS-equipped motorcycle can meet S6.9.8 after undergoing all preceding tests, including S6.3, when conducted in the order specified in the standard. For these reasons, we elect not to make any changes to the rule in this regard.

4. Other ABS-Related Comments

Statistical Study of ABS Effectiveness. The Insurance Institute for Highway Safety (IIHS) comment discussed its 2008 statistical study in which the IIHS estimated ABS effectiveness by analyzing motorcycle fatal crash data.[94] By comparing fatal crash frequency of ABS-equipped and non-ABS-equipped motorcycles, the IIHS concluded that ABS reduces fatal crash involvement significantly. IIHS commented that a related study by the Highway Loss Data Institute indicated that ABS also reduces collision losses significantly. The IIHS further stated that ''[t]he importance of equipping motorcycles with ABS increases as motorcycling continues to grow in popularity.'' The IIHS stated that it supports the proposed strengthening of FMVSS No. 122 and urged NHTSA to consider further changes to encourage or require ABS on all motorcycles.

Agency Response: NHTSA is well acquainted with the IIHS statistical study. NHTSA has not yet determined what action we might take in the area of advanced motorcycle braking. The agency may explore the possibility of mandating ABS on motorcycles as a requirement in FMVSS No. 122 as suggested by IIHS in a future rulemaking.

SMO-based ABS. The comment of SMO Group, L.L.C. (SMO), described a patented type of anti-lock system called Sliding Mode Observer ABS.[95] SMO stated that this type of ABS is licensed for non-commercial aircraft and uses the same hardware as current motorcycle ABS. SMO commented that the system can more accurately maintain wheel slip close to the optimal level by using sensing and control algorithms different from those of conventional ABS. The company stated that, in computer simulations of aircraft and rail applications, instead of the actual friction coefficient varying between ± 5% of the peak coefficient of friction, as with currently available ABS, the SMO-based system can keep within ± 0.5% of the peak level friction coefficient.

Agency Response: While we appreciate SMO's comment, the company provided few details about the Sliding Mode Observer system and did not include test data of any kind to substantiate their claims of improved ABS performance. Therefore, we have no basis for evaluating whether such a system improves significantly on current motorcycle ABS systems.

Furthermore, SMO did not make any specific request relating to NHTSA's proposed rule, such as changes to the regulatory text. SMO generally did not comment on NHTSA's effort to harmonize with the GTR other than to say that it would like to discuss its patented braking technology with NHTSA. As such, we are not making any changes to the updated FMVSS No. 122 regulatory text in response to this comment.

Regulatory Text Typographical Error. The MIC pointed out in its comments that there appeared to be some proposed regulatory text missing at paragraph S6.9.5.1(a), *Test Surfaces.*

Agency Response: We agree with the MIC that there was an omission in that paragraph of proposed regulatory text. We have revised paragraph S6.9.5.1(a) to specify that the test surface condition should be the ''[h]igh friction or low friction surface, as applicable.''

H. Partial Failure Test—Split Service Brake System

We are adopting the proposed partial failure test applicable to motorcycles equipped with split service brake systems, with the exception of the minor corrections explained below, for the reasons explained here and in the NPRM. The purpose of this test is to ensure that, in the event of a pressure component leakage failure in one of the hydraulic subsystems, a minimum level of braking performance is still available in the remaining hydraulic subsystem to allow the rider to bring the motorcycle to a stop. As explained in the NPRM, the proposed service brake system partial failure test was not substantially different from the current FMVSS No. 122 test. Its statement of applicability was modified to use the newly proposed motorcycle categories. Also, S5.1.10.1(a)(2) was written to require a warning lamp to be activated, without actuation of the brake control, when the brake fluid level in the master cylinder reservoir falls below the greater of two levels. However, the conjunction ''and'' rather than ''or'' was incorrectly used in the proposed regulatory text between the two levels. This has been corrected.

The MIC pointed out in its comments that one of the proposed performance requirements for this test, proposed paragraph S6.10.4(a), required the braking system to comply with the failure warning requirements ''set out in paragraph 3.1.11'' when the test was performed with one of the subsystems deactivated. The MIC noted that the reference to paragraph 3.1.11 was incorrect, and suggested instead that the regulatory text should have referred to paragraph S5.1.10.

Agency Response: We agree that the reference to ''paragraph 3.1.11'' in proposed S6.10.4(a) was inadvertently copied from the GTR regulatory text. The correct reference to the failure warning requirements in the FMVSS No. 122 regulatory text is S5.1.10.1, *Split service brake system warning lamps,* and we have amended the regulatory text in this final rule accordingly.

I. Power-Assisted Braking System Failure Test

Since no commenter mentioned the proposed power-assisted braking system failure test, this final rule adopts the test as proposed, for the reasons explained in the NPRM. The new power-assisted braking system failure test does not require power-assisted braking systems but does contain performance requirements for when such brake systems fail, to ensure minimum brake system performance in motorcycles that are so equipped. The current FMVSS No. 122 does not have any performance requirements to test the failure of a power-assisted braking system because the application of power-assisted braking systems on motorcycles is relatively new. Certifying to the performance requirement is not required if the motorcycle is equipped with another separate service brake system that operates without power-assist.

[94] Insurance Institute for Highway Safety Comments, Docket No. NHTSA–2008–0150–0015.1.

[95] SMO Group, L.L.C. Comments, Docket No. NHTSA–2008–0150–0013.1.

V. Other Comments and Technical Amendments

A. Labeling Requirements

The proposed regulatory text in the NPRM did not include a few labeling requirements that were in FMVSS No. 122, since the GTR did not cover labeling. Since we still believe these labeling requirements are useful, and did not intend to remove those labeling requirements in updating FMVSS No. 122, we are including them in the final rule. We believe this will not be burdensome for motorcycle manufacturers because they are already including these labels on the relevant pieces of motorcycle equipment.

Currently, FMVSS No. 122 requires a brake fluid warning label to be provided on the brake fluid reservoir.[96] FMVSS No. 122 also requires that a label be provided for the brake failure indicator lamp.[97] These required labels identify important safety features and safety-related information, and they have longstanding applicability in FMVSS No. 122.

For the fluid reservoir label, we have inserted new language in the regulatory text under the general requirements section S5.1.9, *Hydraulic Service Brake System.* The new subsection, S5.1.9(d), closely reflects the requirements in section S5.1.2.2 of the existing FMVSS No. 122 safety standard. This new subsection identifies the wording, location, and other characteristics of the warning statement. Specifically, it requires that the warning statement: (1) Have lettering at least 3/32 of an inch high; (2) that it be located on or within 4 inches of the filler cap so as to be visible by direct viewing; and (3) that it be permanently affixed and of a contrasting color, or else be either engraved or embossed.

As for labeling of the failure indicator lamp, this lamp is required for split-service brake systems and ABS-equipped brake systems, as specified in section S5.1.10 of the updated FMVSS No. 122 regulatory text. However, the label should be different for each of those types of brake systems. Consequently, the warning lamp label specifications for split service brake systems are listed separately from those for ABS-equipped systems.

For split service systems, we have inserted new paragraph S5.1.10.1(c) which requires each indicator lamp to have the legend ''Brake Failure'' on or adjacent to it in letters not less than 3/32 of an inch high that shall be legible to the driver in daylight when lighted. This is identical to the current FMVSS No. 122 failure indicator lamp label requirement in paragraph S5.1.3.1(d).

Since the existing FMVSS No. 122 did not have ABS performance requirements, there were no existing labeling requirements for ABS failure in FMVSS No. 122. The GTR, and NPRM, did specify that all motorcycles equipped with ABS must also be fitted with a yellow warning lamp to activate whenever there is a malfunction that affects the generation or transmission of signals in the motorcycle's ABS system. However, consistent with other FMVSS addressing ABS system failure,[98] and consistent with the FMVSS that governs and standardizes control, telltales, and indicators, FMVSS No. 101, *Controls and Displays,* motorcycle brake ABS system failure should be indicated with the words ''Antilock'' or ''Anti-lock'' or ''ABS.'' [99] For ABS-equipped systems, we have modified section S5.1.10.2 by breaking the existing proposed text of that section into two paragraphs, identified as ''(a)'' and ''(b),'' and by adding the label requirement under new paragraph ''(c)'' which specifies: ''The indicator shall be labeled in letters at least 3/32 of an inch high with the words 'Antilock' or 'Anti-lock' or 'ABS' in accordance with Table 1 of Standard No. 101 (49 CFR 571.101).''

B. Versions of ASTM Standards

ASTM International commented that NHTSA's proposal makes reference to a version of an ASTM standard that is not the latest version.[100] The proposal refers to version E1337–90(2002) of ASTM's ''Standard Test Method for Determining Longitudinal Peak Braking Coefficient of Paved Surfaces Using Standard Reference Test Tire.'' ASTM pointed out that there is a more recent version, ASTM E1337–90(2008). ASTM asked that references to ASTM standards be done in a way that does not cite any particular version, so that the latest version will always be applicable. Specifically, ASTM requested that NHTSA reference the ''Standard Test Method for Determining Longitudinal Peak Braking Coefficient of Paved Surfaces Using Standard Reference Test Tire'' only as ''ASTM E1137.'' ASTM's comment also would apply to another standard, ASTM E1136, ''Standard Specification for A Radial Standard Reference Tire.'' The NPRM proposed to refer to the ASTM E1136–93(2003) version of that standard.

Agency Response: We are unable to accede to ASTM's request. Incorporation of industry standards or other materials by reference into the Code of Federal Regulations can only be accomplished with the approval of the Director of the Office of the Federal Register, National Archives and Records Administration.[101] The Office of the Federal Register requires regulatory text that incorporates industry standards or other materials by reference to identify the standard or material to be incorporated by title, date, edition, author, publisher, and identification number of the publication.[102]

Further, from a compliance standpoint, it is important to reference a specific version of an industry standard, such as an ASTM procedure, so that regulated entities are on notice regarding the version of the industry recommended practice to which they will be held accountable under a Federal safety standard. NHTSA cannot reference an industry standard in such a way that the underlying procedures in a Federal safety standard are subject to being changed unilaterally, and without notice, by an independent entity such as ASTM. Otherwise, the requirements of the FMVSS could be changed without NHTSA's or the public's knowledge or approval, and without the prerequisite administrative process including public notice and comment. We will, however, reference the 2008 version of ASTM E1136–93, as it is unchanged from the 2003 version.

C. Terminology

The MIC commented that NHTSA should substitute the word used to reference a type or category of motorcycle, ''type,'' as it was used in S5.1, *Brake System Requirements,* with the word ''category.''[103]

Agency Response: Since the latter term is the one used in the definitions of the five different types of motorcycles in S4, *Definitions,* we agree with this change and have revised the regulatory text accordingly.

[96] 49 CFR 571.122, S5.1.2.2 (2009).

[97] 49 CFR 571.122, S5.1.3.1(d) (2009).

[98] *See, e.g.,* 49 CFR 571.121, S5.1.6.2 (2009).

[99] *See, e.g.,* 49 CFR 571.101, Table 1 (2009).

[100] ASTM International Comments, Docket No. NHTSA–2008–0150–0011.1.

[101] Congress authorized incorporation by reference, only with the approval of the Director of the Federal Register, in the Freedom of Information Act to reduce the volume of material published in the **Federal Register** and Code of Federal Regulations. 5 U.S.C. 552, as amended by Public Law 104–231, 100 Stat. 3048 (1996).

[102] National Archives and Records Administration, Office of the Federal Register, *Federal Register Document Drafting Handbook,* § 6.4 (October 1998 Revision), *available at http://www.archives.gov/federal-register/write/resources.html* (last accessed May 14, 2010).

[103] MIC Comments, Docket No. NHTSA–2008–0150–0017.1 at 3.

VI. Compliance Date

The NPRM explained that NHTSA had tentatively determined that virtually all of the current motorcycle fleet would comply with the proposal, if made final. Therefore, we proposed to make the upgraded requirements mandatory at the beginning of the first September that is two full years after publication of a final rule. The NPRM proposed that optional early compliance would be permitted on and after 30 days after the date of publication of a final rule in the **Federal Register**.

Two commenters, Harley-Davidson and the MIC, requested that additional lead time be allowed for phase-in of the amended FMVSS No. 122 requirements as they apply to three-wheeled motorcycles of category 3–5 [104] as defined in both the GTR and the NPRM.[105] They stated that the proposal contains new brake system requirements for this type of three-wheeler in that split-service or combined brakes will be required instead of merely allowed. They requested an additional year of lead time beyond the two-year minimum lead time of the proposal.

Agency Response: We agree that some category 3–5 motorcycles potentially will need re-engineering of their brake systems and that additional lead time is appropriate. Therefore, for category 3–5 motorcycles, the updated FMVSS No. 122 promulgated in today's final rule will be mandatory no later than the beginning of the first September that is three full years after publication of today's final rule. This will provide a total of at least three years of lead time for category 3–5 motorcycles. For all other motorcycle categories, compliance with the updated FMVSS No. 122 must occur no later than the beginning of the first September that is two full years after publication of today's final rule, as proposed in the NPRM.

The precise compliance dates for each motorcycle category are set forth, as applicable, in § 571.122, S3. Optional early compliance is permitted on and after 60 days after the date of publication of a final rule in the **Federal Register**. The optional early compliance date was changed from the 30 days proposed in the NPRM to coincide with the date on which the text of the Code of Federal Regulations is amended. To accommodate the extra year of lead time for category 3–5 motorcycles and the optional early compliance, we are retaining the text of current version of FMVSS No. 122 in a new Standard, FMVSS No. 122a. We are amending paragraph S3 of the redesignated FMVSS No. 122a to limit its applicability to motorcycles not certified to the new FMVSS No. 122.

We are also including in this final rule a technical correction to 49 CFR 571.5. When NHTSA published a final rule in January 2012 consolidating all of the standards and practices that are incorporated by reference in the FMVSSs into § 571.5, the agency inadvertently incorporated an incorrect version of ASTM E274–70, ''Skid Resistance of Paved Surfaces Using a Full-Scale Tire,'' into FMVSS Nos. 105 and 122.[106] The version that was incorporated by reference in January 2012 was the original 1970 version of the standard, which is different from the version that had been previously incorporated by reference into FMVSS Nos. 105 and 122, which includes editorial changes made in July 1974. This final rule corrects this error, and incorporates the correct version of ASTM E274–70 into FMVSS No. 105 and the newly redesignated FMVSS No. 122a.

VII. Costs and Benefits

Although this final rule adds and updates FMVSS No. 122 test procedures, we anticipate that virtually all motorcycles sold in the U.S. can meet the performance requirements in this final rule, and thus, the agency has not been able to quantify safety benefits from the proposal. However, NHTSA believes that the performance requirements promulgated in today's final rule will help ensure the safety of motorcycle brake systems and thus have a beneficial effect on safety. The final rule includes several tests that will update and enhance performance requirements—tests both at the fully loaded condition (''laden'') and lightly-loaded vehicle weight, which ensure adequate braking performance at the two extremes of the loading conditions; a wet brake test that is more representative of the manner in which brakes are wetted during real world riding in wet conditions; a variety of ABS performance tests, for motorcycles so equipped, to ensure adequate antilock performance during emergency braking or on slippery road conditions; and a new test in the event of a failure in the power-assisted braking system, if a motorcycle is so equipped.

Moreover, as mentioned above, motorcycle manufacturers and, ultimately, consumers both here and abroad can expect to achieve cost savings through the formal harmonization of differing sets of standards when the Contracting Parties to the 1998 Agreement implement the Motorcycle Brake Systems GTR. Harmonization enables motorcycle manufacturers to test their models to just one regulation/series of tests to sell globally.

We believe that, although the final rule adds some new requirements to FMVSS No. 122 and replaces some test procedures and performance requirements with ones based on more stringent standards used in another national regulation, none of the new tests will result in measurable costs to motorcycle purchasers. The rule includes performance requirements that constitute the best practices from various standards and regulations. Some of the tests, such as the wet brake test, the ABS performance requirements, and the tests in the loaded condition, are an upgrade to the existing FMVSS No. 122. But current FMVSS No. 122 does not reflect the advancement of modern braking technologies, and almost all motorcycles sold in the U.S. can meet the performance requirements as proposed without any major design changes. The agency believes that motorcycles sold in the U.S. market can comply with the requirements of ECE Regulation No. 78 and JSS 12–61 without any modifications, and that motorcycles sold in the European and Japanese markets can meet U.S. FMVSS No. 122. As a result, any costs for design changes by motorcycle manufacturers to comply with the final rule performance requirements are expected to be minimal and would be offset by the elimination of some test procedures previously in FMVSS No. 122. We expect that, for manufacturers who certify compliance by conducting NHTSA's test procedures, the changes in the compliance test procedures would result in a cost savings of less than one-tenth of a cent per motorcycle.

No commenter addressed the agency's assessment of costs and benefits in the NPRM. However, we have considered Harley-Davidson's comment that some three-wheeled motorcycles would need to have their brake systems redesigned to meet the new brake system requirements for category 3–5 motorcycles. We agree that a limited number of motorcycles will need to be redesigned to comply with the upgraded FMVSS No. 122. We estimate that about

[104] Category 3–5 motorcycles are defined in S3 as motorcycles ''manufactured with three wheels symmetrically arranged in relation to the longitudinal median plane with an engine cylinder capacity in the case of a thermic engine exceeding 50 cm^3 or whatever the means of propulsion a maximum design speed exceeding 50 km/h.'' This category includes primarily ''trikes'' and excludes motorcycles with sidecars, which are category 3–4 motorcycles.

[105] MIC Comments, Docket No. NHTSA–2008–0150–0017.1 at 2; Harley-Davidson Comments, Docket No. NHTSA–2008–0150–0012 at 1–2.

[106] 77 FR 751 (Jan. 6, 2012).

8,000 category 3–5 motorcycles will need to be equipped with a split service brake system, which includes a dual master cylinder. A 2004 NHTSA report estimate the cost of upgrading to a dual master cylinder at a cost of $10.88 per motorcycle in 2002 dollars.[107] Adjusting that cost for inflation results in a cost of $13.38 in 2011 dollars. We anticipate that, based on recent sales numbers of three-wheeled motorcycles, approximately 8,000 motorcycles would need to be equipped with a dual master cylinder. Thus, we believe that the total annual cost of the upgrade necessary to the limited number of three-wheeled motorcycles as a result of today's final rule is approximately $107,040.

VIII. Regulatory Analyses and Notices

A. Vehicle Safety Act

Under 49 U.S.C. Chapter 301, *Motor Vehicle Safety* (49 U.S.C. 30101 *et seq.*), the Secretary of Transportation is responsible for prescribing motor vehicle safety standards that are practicable, meet the need for motor vehicle safety, and are stated in objective terms. 49 U.S.C. 30111(a). When prescribing such standards, the Secretary must consider all relevant, available motor vehicle safety information. 49 U.S.C. 30111(b). The Secretary must also consider whether a proposed standard is reasonable, practicable, and appropriate for the type of motor vehicle or motor vehicle equipment for which it is prescribed and the extent to which the standard will further the statutory purpose of reducing traffic accidents and associated deaths. *Id.* Responsibility for promulgation of Federal motor vehicle safety standards was subsequently delegated to NHTSA. 49 U.S.C. 105 and 322; delegation of authority at 49 CFR 1.50.

The agency carefully considered these statutory requirements in adopting these amendments to FMVSS No. 122. The amendments to FMVSS No. 122 are practicable. This document does not adopt significant changes to the current performance requirements of FMVSS No. 122. Currently, we believe that essentially all motorcycle brakes will meet or exceed the performance criteria specified in the adopted test procedures. Additionally, the amendments will harmonize the U.S. requirements with the Motorcycle Brake Systems Global Technical Regulation.

These amendments are appropriate for the vehicles subject to the performance requirements. Today's final rule continues to exclude motorcycles for which the requirements and test procedures are impractical or unnecessary (e.g., low-speed motorcycles, categories 3–1 and 3–2, continue to be excluded from the heat fade test).

Finally, the agency has determined that the amendments provide objective procedures for determining compliance. The test procedures have been evaluated by the agency, and we have determined that they help achieve repeatable and reproducible results. Further, we are adopting test procedures to provide improved objectivity to existing performance requirements.

B. Executive Order 12866, Executive Order 13563, and DOT Regulatory Policies and Procedures

NHTSA has considered the impacts of this rulemaking action under Executive Order 12866, Executive Order 13563, and the Department of Transportation's (DOT's) related policies and procedures. This rulemaking is not considered significant and was not reviewed by the Office of Management and Budget under E.O. 12866. Given the minimal impacts of the proposed rule, we have not prepared a full regulatory evaluation in accordance with the Department's Regulatory Policies and Procedures.[108] The factual basis supporting this finding is as follows.

This final rule amends test procedures and performance requirements, but would impose minimal additional costs on manufacturers. We believe virtually all motorcycles presently manufactured for the U.S. market can meet these new performance requirements. Thus, this final rule is not expected to require design changes to nearly all current motorcycles. As discussed in section VII above, a limited number of three-wheeled motorcycles would need design changes to include a dual master cylinder at a cost of $13.38 per motorcycle in 2011 dollars. Thus, the total cost of this rule on the motorcycle industry is expected to be approximately $107,040 per year.

We have considered whether the new compliance tests NHTSA will conduct under this final rule will result in additional costs to certify motorcycles as compliant with these performance requirements. The number of tests in the new test procedure (66) is less than the number of tests in the existing FMVSS No. 122 test procedure (72), even though this final rule adds additional tests for motorcycles equipped with ABS. Not all motorcycles are equipped with ABS, and those motorcycles will be subjected to fewer tests as we harmonize our motorcycle braking standards with European and Japanese standards and delete unnecessary tests. For example, this final rule eliminates a reburnishing of the brakes in the existing FMVSS No. 122 test procedure. We have determined that, for manufacturers that certify compliance by conducting NHTSA's test procedures, this final rule would result in a net cost savings of less than one-tenth of a cent per motorcycle.

NHTSA is not able to quantify direct safety benefits from this rule in terms of the number of injuries and fatalities prevented. However, this final rule adds braking tests for motorcycles with antilock brakes. NHTSA believes that those tests will help ensure the safety of motorcycle brake systems.

C. Executive Order 13132 (Federalism)

NHTSA has examined today's final rule pursuant to Executive Order 13132 (64 FR 43255, August 10, 1999) and concluded that no additional consultation with States, local governments or their representatives is mandated beyond the rulemaking process. The agency has concluded that the rulemaking would not have sufficient federalism implications to warrant consultation with State and local officials or the preparation of a federalism summary impact statement. The final rule would not have ''substantial direct effects on the States, on the relationship between the national government and the States, or on the distribution of power and responsibilities among the various levels of government.''

NHTSA rules can preempt in two ways. First, the National Traffic and Motor Vehicle Safety Act contains an express preemption provision: When a motor vehicle safety standard is in effect under this chapter, a State or a political subdivision of a State may prescribe or continue in effect a standard applicable to the same aspect of performance of a motor vehicle or motor vehicle equipment only if the standard is identical to the standard prescribed under this chapter. 49 U.S.C. 30103(b)(1). It is this statutory command by Congress that preempts any non-identical State legislative and administrative law addressing the same aspect of performance.

The express preemption provision described above is subject to a savings clause under which ''[c]ompliance with a motor vehicle safety standard

[107] Cost and Weight Added by the Federal Motor Vehicle Safety Standards for Model Years 1968–2001 in Passenger Cars and Light Trucks (NHTSA Report No. DOT HS 809 834), December 2004, p. 21–23.

[108] Department of Transportation, *Adoption of Regulatory Policies and Procedures,* 44 FR 11034 (Feb. 26, 1979).

prescribed under this chapter does not exempt a person from liability at common law.'' 49 U.S.C. 30103(e) Pursuant to this provision, State common law tort causes of action against motor vehicle manufacturers that might otherwise be preempted by the express preemption provision are generally preserved. However, the Supreme Court has recognized the possibility, in some instances, of implied preemption of such State common law tort causes of action by virtue of NHTSA's rules, even if not expressly preempted. This second way that NHTSA rules can preempt is dependent upon there being an actual conflict between an FMVSS and the higher standard that would effectively be imposed on motor vehicle manufacturers if someone obtained a State common law tort judgment against the manufacturer, notwithstanding the manufacturer's compliance with the NHTSA standard. Because most NHTSA standards established by an FMVSS are minimum standards, a State common law tort cause of action that seeks to impose a higher standard on motor vehicle manufacturers will generally not be preempted. However, if and when such a conflict does exist—for example, when the standard at issue is both a minimum and a maximum standard—the State common law tort cause of action is impliedly preempted. See *Geier* v. *American Honda Motor Co.,* 529 U.S. 861 (2000).

Pursuant to Executive Order 13132 and 12988, NHTSA has considered whether this rule could or should preempt State common law causes of action. The agency's ability to announce its conclusion regarding the preemptive effect of one of its rules reduces the likelihood that preemption will be an issue in any subsequent tort litigation.

To this end, the agency has examined the nature (e.g., the language and structure of the regulatory text) and objectives of today's rule and finds that this rule, like many NHTSA rules, prescribes only a minimum safety standard. As such, NHTSA does not intend that this rule preempt state tort law that would effectively impose a higher standard on motor vehicle manufacturers than that established by today's rule. Establishment of a higher standard by means of State tort law would not conflict with the minimum standard announced here. Without any conflict, there could not be any implied preemption of a State common law tort cause of action.

D. Executive Order 13045

Executive Order 13045 applies to any rulemaking that: (1) Is determined to be ''economically significant'' as defined under Executive Order 12866, and (2) concerns an environmental, health or safety risk that NHTSA has reason to believe may have a disproportionate effect on children.[109] If the regulatory action meets both criteria, we must evaluate the environmental health or safety effects of the planned rule on children, and explain why the planned regulation is preferable to other potentially effective and reasonably feasible alternatives considered by us.

This rulemaking is not subject to the Executive Order because it is not economically significant as defined in Executive Order 12866. It also does not involve decisions based on health risks that disproportionately affect children.

E. Executive Order 12988 (Civil Justice Reform)

With respect to the review of the promulgation of a new regulation, section 3(b) of Executive Order 12988, ''Civil Justice Reform,'' requires that Executive agencies make every reasonable effort to ensure that the regulation: (1) Specifies in clear language the preemptive effect; (2) specifies in clear language the effect on existing Federal law or regulation, including all provisions repealed, circumscribed, displaced, impaired, or modified; (3) provides a clear legal standard for affected conduct rather than a general standard, while promoting simplification and burden reduction; (4) specifies in clear language the retroactive effect; (5) specifies whether administrative proceedings are to be required before parties may file suit in court; (6) explicitly or implicitly defines key terms; and (7) addresses other important issues affecting clarity and general draftsmanship of regulations.[110] This document is consistent with that requirement.

Pursuant to this Order, NHTSA notes as follows. The preemptive effect of this proposed rule is discussed above. NHTSA notes further that there is no requirement that individuals submit a petition for reconsideration or pursue other administrative proceeding before they may file suit in court.

F. Regulatory Flexibility Act

Pursuant to the Regulatory Flexibility Act (5 U.S.C. 601 *et seq.,* as amended by the Small Business Regulatory Enforcement Fairness Act (SBREFA) of 1996) whenever an agency is required to publish a notice of rulemaking for any proposed or final rule, it must prepare and make available for public comment a regulatory flexibility analysis that describes the effect of the rule on small entities (i.e., small businesses, small organizations, and small governmental jurisdictions). However, no regulatory flexibility analysis is required if the head of an agency certifies the rule would not have a significant economic impact on a substantial number of small entities. The SBREFA amended the Regulatory Flexibility Act to require Federal agencies to provide a statement of the factual basis for certifying that a rule would not have a significant economic impact on a substantial number of small entities.

We have considered the effects of this rulemaking action under the Regulatory Flexibility Act (5 U.S.C. 601 *et seq.*) and certify that this final rule will not have a significant economic impact on a substantial number of small entities. The agency is not currently aware of any motorcycle manufacturer that is considered a small business. The brake systems installed on motorcycles are typically developed by one of the major brake component suppliers, which are independent companies. There are cases where the motorcycle manufacturer may perform some of the brake system design and development in-house, and have the system components manufactured by an outside supplier. NHTSA does not consider any of these businesses to be small business entities that would be significantly economically impacted by this rulemaking.

G. National Environmental Policy Act

We have analyzed this proposed amendment for the purposes of the National Environmental Policy Act and determined that it would not have any significant impact on the quality of the human environment.

H. Paperwork Reduction Act

Under the Paperwork Reduction Act of 1995, a person is not required to respond to a collection of information by a Federal agency unless the collection displays a valid Office of Management and Budget (OMB) control number. The rule does not contain any new information collection requirements.

I. National Technology Transfer and Advancement Act

Section 12(d) of the National Technology Transfer and Advancement Act of 1995 (NTTAA) directs us to use voluntary consensus standards in regulatory activities unless doing so would be inconsistent with applicable

[109] Exec. Order No. 13045, 62 FR 19885 (Apr. 23, 1997).

[110] Exec. Order No. 12988, 61 FR 4729 (Feb. 7, 1996).

law or otherwise impractical.[111] Voluntary consensus standards are technical standards (e.g., materials specifications, test methods, sampling procedures, and business practices) that are developed or adopted by voluntary consensus standards bodies, such as the Society of Automotive Engineers (SAE) and the American Society for Testing and Materials (ASTM). The NTTAA directs us to provide Congress, through OMB, explanations when we decide not to use available and applicable voluntary consensus standards.

ASTM E1136–93, *Standard Specification for a Radial Standard Reference Test Tire,* and ASTM Method E1337–90, *Standard Test Method for Determining Longitudinal Peak Braking Coefficient of Paved Surfaces Using a Standard Reference Test Tire,* are incorporated by reference in the regulatory text. This is consistent with the NTTAA because these are industry voluntary consensus standards.

J. Unfunded Mandates Reform Act

Section 202 of the Unfunded Mandates Reform Act of 1995 (UMRA) requires Federal agencies to prepare a written assessment of the costs, benefits and other effects of proposed or final rules that include a Federal mandate likely to result in the expenditure by State, local or tribal governments, in the aggregate, or by the private sector, of more than $100 million in any one year (adjusted for inflation with base year of 1995).[112] Before promulgating a NHTSA rule for which a written statement is needed, section 205 of the UMRA generally requires us to identify and consider a reasonable number of regulatory alternatives and adopt the least costly, most cost-effective or least burdensome alternative that achieves the objectives of the rule.[113] The provisions of section 205 do not apply when they are inconsistent with applicable law. Moreover, section 205 allows us to adopt an alternative other than the least costly, most cost-effective or least burdensome alternative if we publish with the final rule an explanation why that alternative was not adopted.

Today's final rule will not impose any unfunded mandates under the Unfunded Mandates Reform Act of 1995. This rulemaking does not meet the definition of a Federal mandate because it would not result in costs of $100 million or more to either State, local, or tribal governments, in the aggregate, or to the private sector. Thus, this rulemaking is not subject to the requirements of sections 202 and 205 of the UMRA.

K. Regulation Identifier Number (RIN)

The Department of Transportation assigns a regulation identifier number (RIN) to each regulatory action listed in the Unified Agenda of Federal Regulations. The Regulatory Information Service Center publishes the Unified Agenda in April and October of each year. You may use the RIN contained in the heading at the beginning of this document to find this action in the Unified Agenda.

L. Privacy Act

Anyone is able to search the electronic form of all comments received into any of our dockets by the name of the individual submitting the comment (or signing the comment, if submitted on behalf of an association, business, labor union, etc.). You may review DOT's complete Privacy Act Statement in the **Federal Register** published on April 11, 2000.[114] You may also visit *http://www.regulations.gov/search/Regs/home.html#privacyNotice* (last accessed May 17, 2010).

List of Subjects in 49 CFR Part 571

Incorporation by reference, Motor vehicle safety, Reporting and recordkeeping requirements, Tires.

In consideration of the foregoing, NHTSA amends 49 CFR part 571 as follows:

PART 571—FEDERAL MOTOR VEHICLE SAFETY STANDARDS

■ 1. The authority citation for Part 571 continues to read as follows:

Authority: 49 U.S.C. 322, 30111, 30115, 30117 and 30166; delegation of authority at 49 CFR 1.50.

■ 2. Amend § 571.5 by revising paragraphs (d)(29), (32), and (33), redesignating paragraphs (i) through (l) as paragraphs (j) through (m), and adding new paragraph (i) to read as follows:

§ 571.5 Matter incorporated by reference.

* * * * *

(d) * * *

(29) ASTM E274–70, ''Standard Method of Test for Skid Resistance of Paved Surfaces Using a Full-Scale Tire,'' revised July 1974, into §§ 571.105; 571.122a.

* * * * *

(32) ASTM E1136–93 (Reapproved 2003), ''Standard Specification for a Radial Standard Reference Test Tire,'' approved March 15, 1993, into §§ 571.105; 571.121; 571.122; 571.126; 571.135; 571.139; 571.500.

(33) ASTM E1337–90 (Reapproved 2008), ''Standard Test Method for Determining Longitudinal Peak Braking Coefficient of Paved Surfaces Using a Standard Reference Test Tire,'' approved June 1, 2008, into §§ 571.105; 571.121; 571.122; 571.126; 571.135; 571.500.

* * * * *

(i) International Organization for Standardization (ISO), 1, ch. de la Voie-Creuse, CP 56, CH–1211 Geneva 20, Switzerland. Telephone: +41 22 749 01 11. Fax: +41 22 733 34 30. Web site: *http://www.iso.org/.*

(1) ISO 7117:1995(E), ''Motorcycles—Measurement of maximum speed,'' Second edition, March 1, 1995, into § 571.122.

(2) [*Reserved*]

* * * * *

§ 571.122 [Redesignated as § 571.122a]

■ 3. Redesignate § 571.122 as § 571.122a and revise paragraph S3 to read as follows:

§ 571.122a Standard No. 122a; Motorcycle brake systems.

* * * * *

S3. *Application.* This standard applies to motorcycles. However, this standard does not apply to motorcycles certified to comply with § 571.122.

* * * * *

■ 4. Add new § 571.122 to read as follows:

§ 571.122 Standard No. 122; Motorcycle brake systems.

S1. *Scope.* This standard specifies requirements for motorcycle service brake systems and, where applicable, associated parking brake systems.

S2. *Purpose.* The purpose of the standard is to ensure safe motorcycle braking performance under normal and emergency riding conditions.

S3. *Application.* This standard applies to category 3–1 motorcycles, category 3–2 motorcycles, category 3–3 motorcycles, and category 3–4 motorcycles manufactured on and after September 1, 2014. This standard applies to category 3–5 motorcycles manufactured on and after September 1, 2015. At the manufacturer's option, any motorcycle manufactured on or after October 23, 2012 may comply with this standard.

[111] National Technology Transfer and Advancement Act of 1995 § 12(d), 15 U.S.C. 272.

[112] Unfunded Mandates Reform Act of 1995 § 202, 2 U.S.C. 1532.

[113] 2 U.S.C. 1535.

[114] *Privacy Act of 1974: Systems of Records,* 65 FR 19476, 19478 (Apr. 11, 2000).

S4. *Definitions.*

Antilock brake system or *ABS* means a system which senses wheel slip and automatically modulates the pressure producing the braking forces at the wheel(s) to limit the degree of wheel slip.

Baseline test means a stop or a series of stops carried out in order to confirm the performance of the brake prior to subjecting it to a further test such as the heating procedure or wet brake stop.

Brake means those parts of the brake system where the forces opposing the movement of the motorcycle are developed.

Brake system means the combination of parts consisting of the control, the brake, and the components that provide the functional link between the control and the brake, but excluding the engine, whose function it is to progressively reduce the speed of a moving motorcycle, bring it to a halt, and keep it stationary when halted.

Category 3–1 motorcycle means a two-wheeled motorcycle with an engine cylinder capacity in the case of a thermic engine not exceeding 50 cubic centimeters (cm^3) and whatever the means of propulsion a maximum design speed not exceeding 50 kilometers per hour (km/h).

Category 3–2 motorcycle means a three-wheeled motorcycle of any wheel arrangement with an engine cylinder capacity in the case of a thermic engine not exceeding 50 cm^3 and whatever the means of propulsion a maximum design speed not exceeding 50 km/h.

Category 3–3 motorcycle means a two-wheeled motorcycle with an engine cylinder capacity in the case of a thermic engine exceeding 50 cm^3 or whatever the means of propulsion a maximum design speed exceeding 50 km/h.

Category 3–4 motorcycle means a motorcycle manufactured with three wheels asymmetrically arranged in relation to the longitudinal median plane with an engine cylinder capacity in the case of a thermic engine exceeding 50 cm^3 or whatever the means of propulsion a maximum design speed exceeding 50 km/h. (This category definition is intended to include motorcycles with sidecars.)

Category 3–5 motorcycle means a motorcycle manufactured with three wheels symmetrically arranged in relation to the longitudinal median plane with an engine cylinder capacity in the case of a thermic engine exceeding 50 cm^3 or whatever the means of propulsion a maximum design speed exceeding 50 km/h.

Combined brake system or *CBS* means:

(a) For motorcycle categories 3–1 and 3–3: a service brake system where at least two brakes on different wheels are actuated by the operation of a single control.

(b) For motorcycle categories 3–2 and 3–5: a service brake system where the brakes on all wheels are actuated by the operation of a single control.

(c) For motorcycle category 3–4: a service brake system where the brakes on at least the front and rear wheels are actuated by the operation of a single control. (If the rear wheel and the asymmetrical wheel are braked by the same brake system, this is regarded as the rear brake.)

Control means the part actuated directly by the rider in order to supply and regulate the energy required for braking the motorcycle.

Driver mass means the nominal mass of a driver that equals 75 kg (68 kg occupant mass plus 7kg of luggage mass).

Engine disconnected means when the engine is no longer internally connected to the driving wheel(s), i.e., the clutch is disengaged and/or the transmission is in neutral.

Gross vehicle mass means the maximum mass of the fully laden solo vehicle, based on its construction and design performances, as declared by the manufacturer.

Initial brake temperature means the temperature of the hottest brake before any brake application.

Laden means the gross vehicle mass.

Lightly loaded means mass in running order plus 15 kg for test equipment, or the laden condition, whichever is less. In the case of ABS tests on a low friction surface (paragraphs S6.9.4 to S6.9.7), the mass for test equipment is increased to 30 kg to account for outriggers.

Mass in running order means the sum of unladen vehicle mass and driver mass.

Peak braking coefficient or *PBC* means the measure of tire-to-road surface friction based on the maximum deceleration of a rolling tire.

Power-assisted braking system means a brake system in which the energy necessary to produce the braking force is supplied by the physical effort of the rider assisted by one or more energy supplying devices, for example vacuum assisted (with vacuum booster).

Secondary brake system means the second service brake system on a motorcycle equipped with a combined brake system.

Service brake system means a brake system which is used for slowing the motorcycle when in motion.

Sidecar means a one-wheeled vehicle that is attached to the side of a motorcycle.

Single brake system means a brake system which acts on only one axle.

Split service brake system or *SSBS* means a brake system that operates the brakes on all wheels, consisting of two or more subsystems actuated by a single control designed so that a single failure in any subsystem (such as a leakage type failure of a hydraulic subsystem) does not impair the operation of any other subsystem.

Stopping distance means the distance traveled by the motorcycle from the point the rider begins to actuate the brake control to the point at which the motorcycle reaches full stop. For tests where simultaneous actuation of two controls is specified, the distance traveled is taken from the point the first control is actuated.

Test speed means the motorcycle speed measured the moment the rider begins to actuate the brake control. For tests where simultaneous actuation of two controls is specified, the motorcycle speed is taken from the moment the first control is actuated.

Unladen vehicle mass means the nominal mass of a complete vehicle as determined by the following criteria:

(a) Mass of the vehicle with bodywork and all factory fitted equipment, electrical and auxiliary equipment for normal operation of vehicle, including liquids, tools, fire extinguisher, standard spare parts, chocks and spare wheel, if fitted.

(b) The fuel tanks filled to at least 90 percent of rated capacity and the other liquid containing systems (except those for used water) to 100 percent of the capacity specified by the manufacturer.

Vmax means either the speed attainable by accelerating at a maximum rate from a standing start for a distance of 1.6 km on a level surface, with the vehicle lightly loaded, or the speed measured in accordance with International Organization for Standardization (ISO) 7117:1995(E) (incorporated by reference; see § 571.5).

Wheel lock means the condition that occurs when there is 100 percent wheel slip.

S5. *General requirements.*

S5.1 *Brake system requirements.* Each motorcycle shall meet each of the test requirements specified for a motorcycle of its category and for those brake features on the motorcycle.

S5.1.1 *Service brake system control operation.* Each motorcycle shall have a configuration that enables a rider to actuate the service brake system control while seated in the normal driving

position and with both hands on the steering control.

S5.1.2 *Secondary brake system control operation.* Each motorcycle shall have a configuration that enables a rider to actuate the secondary brake system control while seated in the normal driving position and with at least one hand on the steering control.

S5.1.3 *Parking brake system.*

(a) If a parking brake system is fitted, it shall hold the motorcycle stationary on the slope prescribed in S6.8.2. The parking brake system shall:

(1) have a control which is separate from the service brake system controls; and

(2) be held in the locked position by solely mechanical means.

(b) Each motorcycle equipped with a parking brake shall have a configuration that enables a rider to be able to actuate the parking brake system while seated in the normal driving position.

S5.1.4 *Two-wheeled motorcycles of categories 3–1 and 3–3.* Each category 3–1 and 3–3 two-wheeled motorcycle shall be equipped with either two separate service brake systems, or a split service brake system, with at least one brake operating on the front wheel and at least one brake operating on the rear wheel.

S5.1.5 *Three-wheeled motorcycles of category 3–4.* Each category 3–4 motorcycle shall comply with the brake system requirements in S5.1.4. A brake on the asymmetric wheel (with respect to the longitudinal axis) is not required.

S5.1.6 *Three-wheeled motorcycles of category 3–2.* Each category 3–2 motorcycle shall be equipped with a parking brake system plus one of the following service brake systems:

(a) Two separate service brake systems, except CBS, which, when applied together, operate the brakes on all wheels; or

(b) A split service brake system; or

(c) A CBS that operates the brake on all wheels and a secondary brake system which may be the parking brake system.

S5.1.7 *Three-wheeled motorcycles of categories 3–5.* Each category 3–5 motorcycle shall be equipped with:

(a) A parking brake system; and

(b) A foot actuated service brake system which operates the brakes on all wheels by way of either:

(1) A split service brake system; or

(2) A CBS and a secondary brake system, which may be the parking brake system.

S5.1.8 *Two separate service brake systems.* For motorcycles where two separate service brake systems are installed, the systems may share a common brake, if a failure in one system does not affect the performance of the other.

S5.1.9 *Hydraulic service brake system.* For motorcycles that use hydraulic fluid for brake force transmission, the master cylinder shall:

(a) Have a sealed, covered, separate reservoir for each brake system; and

(b) Have a minimum reservoir capacity equivalent to 1.5 times the total fluid displacement required to satisfy the new to fully worn lining condition with the worst case brake adjustment conditions; and

(c) Have a reservoir where the fluid level is visible for checking without removal of the cover.

(d) Have a brake fluid warning statement that reads as follows, in letters at least 3/32 of an inch high: *Warning: Clean filler cap before removing. Use only _____ fluid from a sealed container* (inserting the recommended type of brake fluid as specified in accordance with 49 CFR 571.116, e.g., ''DOT 3''). The lettering shall be:

(1) Permanently affixed, engraved, or embossed;

(2) Located so as to be visible by direct view, either on or within 4 inches of the brake-fluid reservoir filler plug or cap; and

(3) Of a color that contrasts with its background, if it is not engraved or embossed.

S5.1.10 *Warning lamps.* All warning lamps shall be mounted in the rider's view.

S5.1.10.1 *Split service brake system warning lamps.*

(a) Each motorcycle that is equipped with a split service brake system shall be fitted with a red warning lamp, which shall be activated:

(1) When there is a hydraulic failure on the application of a force of ≤ 90 N on the control; or

(2) Without actuation of the brake control, when the brake fluid level in the master cylinder reservoir falls below the greater of:

(i) That which is specified by the manufacturer; or

(ii) That which is less than or equal to half of the fluid reservoir capacity.

(b) To permit function checking, the warning lamp shall be illuminated by the activation of the ignition switch and shall be extinguished when the check has been completed. The warning lamp shall remain on while a failure condition exists whenever the ignition switch is in the ''on'' position.

(c) Each indicator lamp shall have the legend ''Brake Failure'' on or adjacent to it in letters not less than 3/32 of an inch high that shall be legible to the driver in daylight when lighted.

S5.1.10.2 *Antilock brake system warning lamps.*

(a) Each motorcycle equipped with an ABS system shall be fitted with a yellow warning lamp. The lamp shall be activated whenever there is a malfunction that affects the generation or transmission of signals in the motorcycle's ABS system.

(b) To permit function checking, the warning lamp shall be illuminated by the activation of the ignition switch and extinguished when the check has been completed. The warning lamp shall remain on while a failure condition exists whenever the ignition switch is in the ''on'' position.

(c) The indicator shall be labeled in letters at least 3/32 of an inch high with the words ''Antilock'' or ''Anti-lock'' or ''ABS'' in accordance with Table 1 of Standard No. 101 (49 CFR 571.101).

S5.2 *Durability.*

S5.2.1 *Compensation for wear.* Wear of the brakes shall be compensated for by means of a system of automatic or manual adjustment.

S5.2.2 *Notice of wear.* The friction material thickness shall either be visible without disassembly, or where the friction material is not visible, wear shall be assessed by means of a device designed for that purpose.

S5.2.3 *Testing.* During all the tests in this standard and on their completion, there shall be no friction material detachment and no leakage of brake fluid.

S5.3 *Measurement of dynamic performance.* There are two ways in which brake system performance is measured. The particular method to be used is specified in the respective tests in S6.

S5.3.1 *Stopping distance.*

(a) Based on the basic equations of motion:

$$S = 0.1 \cdot V + (X) \cdot V^2,$$

Where:

S = stopping distance in meters
V = initial vehicle speed in km/h
X = a variable based on the requirement for each test

(b) To calculate the corrected stopping distance using the actual vehicle test speed, the following formula is used:

$$Ss = 0.1 \cdot Vs + (Sa - 0.1 \cdot Va) \cdot Vs^2/Va^2,$$

Where:

Ss = corrected stopping distance in meters
Vs = specified vehicle test speed in km/h
Sa = actual stopping distance in meters
Va = actual vehicle test speed in km/h

Note to S5.3.1(b): This equation is only valid when the actual test speed (Va) is within ± 5 km/h of the specified test speed (Vs).

S5.3.2 *Continuous deceleration recording.* The other method used to measure performance is the continuous

recording of the vehicle instantaneous deceleration from the moment a force is applied to the brake control until the end of the stop.

S6. *Test conditions, procedures and performance requirements.*

S6.1 *General.*

S6.1.1 *Test surfaces.*

S6.1.1.1 *High friction surface.* A high friction surface is used for all dynamic brake tests excluding the ABS tests where a low-friction surface is specified. The high-friction surface test area is a clean, dry and level surface, with a gradient of ≤ 1 percent. The high-friction surface has a peak braking coefficient (PBC) of 0.9.

S6.1.1.2 *Low-friction surface.* A low-friction surface is used for ABS tests where a low-friction surface is specified. The low-friction surface test area is a clean and level surface, which may be wet or dry, with a gradient of ≤ 1 percent. The low-friction surface has a PBC of ≤ 0.45.

S6.1.1.3 *Measurement of PBC.* The PBC is measured using the American Society for Testing and Materials (ASTM) E1136–93 (Reapproved 2003) standard reference test tire, in accordance with ASTM Method E1337–90 (Reapproved 2008), at a speed of 64 km/h (both publications incorporated by reference; see § 571.5).

S6.1.1.4 *Parking brake system tests.* The specified test slope has a clean and dry surface that does not deform under the weight of the motorcycle.

S6.1.1.5 *Test lane width.* For two-wheeled motorcycles (motorcycle categories 3–1 and 3–3) the test lane width is 2.5 meters. For three-wheeled motorcycles (motorcycle categories 3–2, 3–4 and 3–5) the test lane width is 2.5 meters plus the vehicle width.

S6.1.2 *Ambient temperature.* The ambient temperature is between 4 °C and 45 °C.

S6.1.3 *Wind speed.* The wind speed is not more than 5 meters per second (m/s).

S6.1.4 *Test speed tolerance.* The test speed tolerance is ± 5 km/h. In the event of the actual test speed deviating from the specified test speed (but within the ± 5 km/h tolerance), the actual stopping distance is corrected using the formula in S5.3.1(b).

S6.1.5 *Automatic transmission.* Motorcycles with automatic transmission shall meet all test requirements—whether they are for ''engine connected'' or ''engine disconnected.'' If an automatic transmission has a neutral position, the neutral position is selected for tests where ''engine disconnected'' is specified.

S6.1.6 *Vehicle position and wheel lock.* The vehicle is positioned in the center of the test lane for the beginning of each stop. Stops are made without the vehicle wheels passing outside the applicable test lane and without wheel lock.

S6.1.7 *Test sequence.* Test sequence is as specified in Table 1.

S6.2 *Preparation.*

S6.2.1 *Engine idle speed.* The engine idle speed is set to the manufacturer's specification.

S6.2.2 *Tire pressures.* The tires are inflated to the manufacturer's specification for the vehicle loading condition for the test.

S6.2.3 *Control application points and direction.* For a hand control lever, the input force (F) is applied on the control lever's forward surface perpendicular to the axis of the lever fulcrum and its outermost point on the plane along which the control lever rotates (see Figure 1). The input force is applied to a point located 50 millimeters (mm) from the outermost point of the control lever, measured along the axis between the central axis of the fulcrum of the lever and its outermost point. For a foot control pedal, the input force is applied to the center of, and at right angles to, the control pedal.

S6.2.4 *Brake temperature measurement.* The brake temperature is measured on the approximate center of the facing length and width of the most heavily loaded shoe or disc pad, one per brake, using a plug-type thermocouple that is embedded in the friction material, as shown in Figure 2.

S6.2.5 *Burnishing procedure.* The vehicle brakes are burnished prior to evaluating performance.

S6.2.5.1 *Vehicle condition.*

(a) Vehicle lightly loaded.

(b) Engine disconnected.

S6.2.5.2 *Conditions and procedure.*

(a) *Initial brake temperature.* Initial brake temperature before each brake application is ≤ 100 °C.

(b) *Test speed.*

(1) Initial speed: 50 km/h or 0.8 Vmax, whichever is lower.

(2) Final speed = 5 to 10 km/h.

(c) *Brake application.* Each service brake system control actuated separately.

(d) *Vehicle deceleration.*

(1) Single front brake system only:

(i) 3.0–3.5 meters per second squared (m/s^2) for motorcycle categories 3–3 and 3–4

(ii) 1.5–2.0 m/s^2 for motorcycle categories 3–1 and 3–2

(2) Single rear brake system only: 1.5–2.0 m/s^2

(3) CBS or split service brake system, and category 3–5: 3.5–4.0 m/s^2

(e) *Number of decelerations.* There shall be 100 decelerations per brake system.

(f) For the first stop, accelerate the vehicle to the initial speed and then actuate the brake control under the conditions specified until the final speed is reached. Then reaccelerate to the initial speed and maintain that speed until the brake temperature falls to the specified initial value. When these conditions are met, reapply the brake as specified. Repeat this procedure for the number of specified decelerations. After burnishing, adjust the brakes in accordance with the manufacturer's recommendations.

S6.3 *Dry stop test—single brake control actuated.*

S6.3.1 *Vehicle condition.*

(a) The test is applicable to all motorcycle categories.

(b) Laden. For vehicles fitted with CBS and split service brake system, the vehicle is tested in the lightly loaded condition in addition to the laden condition.

(c) Engine disconnected.

S6.3.2 *Test conditions and procedure.*

(a) *Initial brake temperature.* Initial brake temperature is ≥ 55 °C and ≤ 100 °C.

(b) *Test speed.*

(1) Motorcycle categories 3–1 and 3–2: 40 km/h or 0.9 Vmax, whichever is lower.

(2) Motorcycle categories 3–3, 3–4 and 3–5: 60 km/h or 0.9 Vmax, whichever is lower.

(c) *Brake application.* Each service brake system control actuated separately.

(d) *Brake actuation force.*

(1) Hand control: ≤ 200 N.

(2) Foot control:

(i) ≤ 350 N for motorcycle categories 3–1, 3–2, 3–3 and 3–5.

(ii) ≤ 500 N for motorcycle category 3–4.

(e) Number of stops: until the vehicle meets the performance requirements, with a maximum of 6 stops.

(f) For each stop, accelerate the vehicle to the test speed and then actuate the brake control under the conditions specified in this paragraph.

S6.3.3 *Performance requirements.* When the brakes are tested in accordance with the test procedure set out in paragraph S6.3.2., the stopping distance shall be as specified in column 2 of Table 2.

S6.4 *Dry stop test—all service brake controls actuated.*

S6.4.1 *Vehicle condition.*

(a) The test is applicable to motorcycle categories 3–3, 3–4 and 3–5.

(b) Lightly loaded.

(c) Engine disconnected.

S6.4.2 *Test conditions and procedure.*

(a) *Initial brake temperature.* Initial brake temperature is ≥ 55 °C and ≤ 100 °C.

(b) *Test speed.* Test speed is 100 km/h or 0.9 Vmax, whichever is lower.

(c) *Brake application.* Simultaneous actuation of both service brake system controls, if so equipped, or of the single service brake system control in the case of a service brake system that operates on all wheels.

(d) *Brake actuation force.*

(1) Hand control: ≤ 250 N.

(2) Foot control:

(i) ≤ 400 N for motorcycle categories 3–3 and 3–4.

(ii) ≤ 500 N for motorcycle category 3–5.

(e) Number of stops: until the vehicle meets the performance requirements, with a maximum of 6 stops.

(f) For each stop, accelerate the vehicle to the test speed and then actuate the brake control under the conditions specified in this paragraph.

S6.4.3 *Performance requirements.* When the brakes are tested in accordance with the test procedure set out in paragraph S6.4.2., the stopping distance (S) shall be $S \leq 0.0060\ V^2$ (where V is the specified test speed in km/h and S is the required stopping distance in meters).

S6.5 *High speed test.*

S6.5.1 *Vehicle condition.*

(a) The test is applicable to motorcycle categories 3–3, 3–4 and 3–5.

(b) Test is not required for vehicles with Vmax ≤ 125 km/h.

(c) Lightly loaded.

(d) Engine connected (clutch engaged) with the transmission in the highest gear.

S6.5.2 *Test conditions and procedure.*

(a) *Initial brake temperature.* Initial brake temperature is ≥ 55 °C and ≤ 100 °C.

(b) *Test speed.*

(1) Test speed is 0.8 Vmax for motorcycles with Vmax > 125 km/h and < 200 km/h.

(2) Test speed is 160 km/h for motorcycles with Vmax ≥ 200 km/h.

(c) *Brake application.* Simultaneous actuation of both service brake system controls, if so equipped, or of the single service brake system control in the case of a service brake system that operates on all wheels.

(d) *Brake actuation force.*

(1) Hand control: ≤ 200 N.

(2) Foot control:

(i) ≤ 350 N for motorcycle categories 3–3 and 3–4.

(ii) ≤ 500 N for motorcycle category 3–5.

(e) Number of stops: until the vehicle meets the performance requirements, with a maximum of 6 stops.

(f) For each stop, accelerate the vehicle to the test speed and then actuate the brake control(s) under the conditions specified in this paragraph.

S6.5.3 *Performance requirements.* When the brakes are tested in accordance with the test procedure set out in paragraph S6.5.2, the stopping distance (S) shall be $\leq 0.1\ V + 0.0067\ V^2$ (where V is the specified test speed in km/h and S is the required stopping distance in meters).

S6.6 *Wet brake test.*

S6.6.1 *General information.*

(a) The test is comprised of two parts that are carried out consecutively for each brake system:

(1) A baseline test based on the dry stop test—single brake control actuated (S6.3).

(2) A single wet brake stop using the same test parameters as in (1), but with the brake(s) being continuously sprayed with water while the test is conducted in order to measure the brakes' performance in wet conditions.

(b) The test is not applicable to parking brake systems unless it is the secondary brake.

(c) Drum brakes or fully enclosed disc brakes are excluded from this test unless ventilation or open inspection ports are present.

(d) This test requires the vehicle to be fitted with instrumentation that gives a continuous recording of brake control force and vehicle deceleration.

S6.6.2 *Vehicle condition.*

(a) The test is applicable to all motorcycle categories.

(b) Laden. For vehicles fitted with CBS and split service brake system, the vehicle is tested in the lightly loaded condition in addition to the laden condition.

(c) Engine disconnected.

(d) Each brake is fitted with water spray equipment as shown in Figure 3.

(1) *Disc brakes—sketch of water spray equipment.* The disc brake water spray equipment is installed as follows:

(i) Water is sprayed onto each brake with a flow rate of 15 liters/hr. The water is equally distributed on each side of the rotor.

(ii) If the surface of the rotor has any shielding, the spray is applied 45° prior to the shield.

(iii) If it is not possible to locate the spray in the position shown on the sketch, or if the spray coincides with a brake ventilation hole or similar, the spray nozzle may be advanced by an additional 90° maximum from the edge of the pad, using the same radius.

(2) *Drum brakes with ventilation and open inspection ports.* The water spray equipment is installed as follows:

(i) Water is sprayed equally onto both sides of the drum brake assembly (on the stationary back plate and on the rotating drum) with a flow rate of 15 liters/hr.

(ii) The spray nozzles are positioned two thirds of the distance from the outer circumference of the rotating drum to the wheel hub center.

(iii) The nozzle position is > 15° from the edge of any opening in the drum back plate.

S6.6.3 *Baseline test—test conditions and procedure.*

(a) The test in paragraph S6.3 (dry stop test—single brake control actuated) is carried out for each brake system but with the brake control force that results in a vehicle deceleration of 2.5–3.0 m/s², and the following is determined:

(1) The average brake control force measured when the vehicle is traveling between 80 percent and 10 percent of the specified test speed.

(2) The average vehicle deceleration in the period 0.5 to 1.0 seconds after the point of actuation of the brake control.

(3) The maximum vehicle deceleration during the complete stop but excluding the final 0.5 seconds.

(b) Conduct 3 baseline stops and average the values obtained in (1), (2), and (3).

S6.6.4 *Wet brake test—test conditions and procedure.*

(a) The vehicle is ridden at the test speed used in the baseline test set out in S6.6.3 with the water spray equipment operating on the brake(s) to be tested and with no application of the brake system.

(b) After a distance of ≥ 500 m, apply the average brake control force determined in the baseline test for the brake system being tested.

(c) Measure the average vehicle deceleration in the period 0.5 to 1.0 seconds after the point of actuation of the brake control.

(d) Measure the maximum vehicle deceleration during the complete stop but excluding the final 0.5 seconds.

S6.6.5 *Performance requirements.* When the brakes are tested in accordance with the test procedure set out in paragraph S6.6.4, the wet brake deceleration performance shall be:

(a) The value measured in paragraph S6.6.4(c) shall be ≥ 60 percent of the average deceleration values recorded in the baseline test in paragraph S6.6.3(a)(2), i.e., in the period 0.5 to 1.0 seconds after the point of actuation of the brake control; and

(b) The value measured in S6.6.4(d) shall be ≤ 120 percent of the average

deceleration values recorded in the baseline test S6.6.3(a)(3), i.e., during the complete stop but excluding the final 0.5 seconds.

S6.7 *Heat fade test.*

S6.7.1 *General information.*

(a) The test comprises three parts that are carried out consecutively for each brake system:

(1) A baseline test using the dry stop test—single brake control actuated (S6.3).

(2) A heating procedure which consists of a series of repeated stops in order to heat the brake(s).

(3) A hot brake stop using the dry stop test—single brake control actuated (S6.3), to measure the brake's performance after the heating procedure.

(b) The test is applicable to motorcycle categories 3–3, 3–4 and 3–5.

(c) The test is not applicable to parking brake systems and secondary service brake systems.

(d) All stops are carried out with the motorcycle laden.

(e) The heating procedure requires the motorcycle to be fitted with instrumentation that gives a continuous recording of brake control force and vehicle deceleration.

S6.7.2 *Baseline test.*

S6.7.2.1 *Vehicle condition—baseline test.* Engine disconnected.

S6.7.2.2 *Test conditions and procedure—baseline test.*

(a) *Initial brake temperature.* Initial brake temperature is ≥ 55 °C and ≤ 100 °C.

(b) *Test speed.* Test speed is 60 km/h or 0.9 Vmax, whichever is the lower.

(c) *Brake application.* Each service brake system control is actuated separately.

(d) *Brake actuation force.*

(1) Hand control: ≤ 200 N.

(2) Foot control:

(i) ≤ 350 N for motorcycle categories 3–3 and 3–4.

(ii) ≤ 500 N for motorcycle category 3–5.

(e) Accelerate the vehicle to the test speed, actuate the brake control under the conditions specified and record the control force required to achieve the vehicle braking performance specified in the table to S6.3.3 (Table 2).

S6.7.3 *Heating procedure.*

S6.7.3.1 *Vehicle condition—heating procedure.* Engine transmission:

(a) From the specified test speed to 50 per cent specified test speed: connected, with the highest appropriate gear selected such that the engine speed remains above the manufacturer's specified idle speed.

(b) From 50 per cent specified test speed to standstill: disconnected.

S6.7.3.2 *Test conditions and procedure—heating procedure.*

(a) *Initial brake temperature.* Initial brake temperature is (prior to first stop only) ≥ 55 °C and ≤ 100 °C.

(b) *Test speed.*

(1) Single brake system, front wheel braking only: 100 km/h or 0.7 Vmax, whichever is the lower.

(2) Single brake system, rear wheel braking only: 80 km/h or 0.7 Vmax, whichever is the lower.

(3) CBS or split service brake system: 100 km/h or 0.7 Vmax, whichever is the lower.

(c) *Brake application.* Each service brake system control actuated separately.

(d) *Brake actuation force.*

(1) For the first stop: The constant control force that achieves a vehicle deceleration rate of 3.0—3.5 m/s² while the vehicle is decelerating between 80 percent and 10 percent of the specified speed.

(2) For the remaining stops:

(i) The same constant brake control force as used for the first stop.

(ii) Number of stops: 10.

(iii) Interval between stops: 1000 m.

(e) Carry out a stop to the conditions specified in this paragraph and then immediately use maximum acceleration to reach the specified speed and maintain that speed until the next stop is made.

S6.7.4 *Hot brake stop—test conditions and procedure.* Perform a single stop under the conditions used in the baseline test (S6.7.2) for the brake system that has been heated during the procedure in accordance with S6.7.3. This stop is carried out within one minute of the completion of the procedure set out in S6.7.3 with a brake control application force less than or equal to the force used during the test set out in S6.7.2.

S6.7.5 *Performance requirements.* When the brakes are tested in accordance with the test procedure set out in S6.7.4, the stopping distance S_2 shall be $\leq 1.67\ S_1 - 0.67 \times 0.1V$,

Where:

S_1 = corrected stopping distance in meters achieved in the baseline test set out in S6.7.2.

S_2 = corrected stopping distance in meters achieved in the hot brake stop set out in S6.7.4.

V = specified test speed in km/h.

S6.8 *Parking brake system test—for motorcycles with parking brakes.*

S6.8.1 *Vehicle condition.*

(a) The test is applicable to motorcycle categories 3–2, 3–4 and 3–5.

(b) Laden.

(c) Engine disconnected.

S6.8.2 *Test conditions and procedure.*

(a) *Initial brake temperature.* Initial brake temperature is ≤ 100 °C.

(b) *Test surface gradient.* Test surface gradient is equal to 18 percent.

(c) *Brake actuation force.*

(1) Hand control: ≤ 400 N.

(2) Foot control: ≤ 500 N.

(d) For the first part of the test, park the vehicle on the test surface gradient facing up the slope by applying the parking brake system under the conditions specified in this paragraph. If the vehicle remains stationary, start the measurement of the test period.

(e) The vehicle must remain stationary to the limits of traction of the braked wheels.

(f) On completion of the test with vehicle facing up the gradient, repeat the same test procedure with the vehicle facing down the gradient.

S6.8.3 *Performance requirements.* When tested in accordance with the test procedure set out in S6.8.2, the parking brake system shall hold the vehicle stationary for 5 minutes when the vehicle is both facing up and facing down the gradient.

S6.9 *ABS tests.*

S6.9.1 *General.*

(a) The tests are only applicable to the ABS fitted on motorcycle categories 3–1 and 3–3.

(b) The tests are to confirm the performance of brake systems equipped with ABS and their performance in the event of ABS electrical failure.

(c) *Fully cycling* means that the anti-lock system is repeatedly modulating the brake force to prevent the directly controlled wheels from locking.

(d) Wheel-lock is allowed as long as the stability of the vehicle is not affected to the extent that it requires the operator to release the control or causes a vehicle wheel to pass outside the test lane.

(e) The test series comprises the individual tests in Table 3, which may be carried out in any order.

S6.9.2 *Vehicle condition.*

(a) Lightly loaded.

(b) Engine disconnected.

S6.9.3 *Stops on a high friction surface.*

S6.9.3.1 *Test conditions and procedure.*

(a) *Initial brake temperature.* Initial brake temperature is ≥ 55 °C and ≤ 100 °C.

(b) *Test speed.* Test speed is 60 km/h or 0.9 Vmax, whichever is lower.

(c) *Brake application.* Simultaneous actuation of both service brake system controls, if so equipped, or of the single service brake control in the case of a service brake system that operates on all wheels.

(d) *Brake actuation force.* The force applied is that which is necessary to ensure that the ABS will cycle fully throughout each stop, down to 10 km/h.

(e) If one wheel is not equipped with ABS, the control for the service brake on that wheel is actuated with a force that is lower than the force that will cause the wheel to lock.

(f) Number of stops: until the vehicle meets the performance requirements, with a maximum of 6 stops.

(g) For each stop, accelerate the vehicle to the test speed and then actuate the brake control under the conditions specified in this paragraph.

S6.9.3.2 *Performance requirements.* When the brakes are tested in accordance with the test procedures referred to in S6.9.3.1:

(a) The stopping distance (S) shall be $\leq 0.0063\ V^2$ (where V is the specified test speed in km/h and S is the required stopping distance in meters); and

(b) there shall be no wheel lock beyond that allowed for in paragraph S6.9.1(d), and the vehicle wheels shall stay within the test lane.

S6.9.4 *Stops on a low friction surface.*

S6.9.4.1 *Test conditions and procedure.* As set out in S6.9.3.1, but using the low friction surface instead of the high friction one.

S6.9.4.2 *Performance requirements.* When the brakes are tested in accordance with the test procedures set out in S6.9.4.1:

(a) the stopping distance (S) shall be $\leq 0.0056\ V^2/P$ (where V is the specified test speed in km/h, P is the peak braking coefficient and S is the required stopping distance in meters); and

(b) there shall be no wheel lock beyond that allowed for in paragraph S6.9.1(d), and the vehicle wheels shall stay within the test lane.

S6.9.5 *Wheel lock checks on high and low friction surfaces.*

S6.9.5.1 *Test conditions and procedure.*

(a) *Test surfaces.* High friction or low friction surface, as applicable.

(b) *Initial brake temperature.* Initial brake temperature is ≥ 55 °C and ≤ 100 °C.

(c) *Test speed.*

(1) On the high friction surface: 80 km/h or 0.8 Vmax, whichever is lower.

(2) On the low friction surface: 60 km/h or 0.8 Vmax, whichever is lower.

(d) *Brake application.*

(1) Each service brake system control actuated separately.

(2) Where ABS is fitted to both brake systems, simultaneous actuation of both brake controls in addition to (1).

(e) *Brake actuation force.* The force applied is that which is necessary to ensure that the ABS will cycle fully throughout each stop, down to 10 km/h.

(f) *Brake application rate.* The brake control actuation force is applied in 0.2–0.5 seconds.

(g) Number of stops: until the vehicle meets the performance requirements, with a maximum of 3 stops.

(h) For each stop, accelerate the vehicle to the test speed and then actuate the brake control under the conditions specified in this paragraph.

S6.9.5.2 *Performance requirements.* When the brakes are tested in accordance with the test procedures set out in S6.9.5.1, there shall be no wheel lock beyond that allowed for in paragraph S6.9.1(d), and the vehicle wheels shall stay within the test lane.

S6.9.6 *Wheel lock check—high to low friction surface transition.*

S6.9.6.1 *Test conditions and procedure.*

(a) *Test surfaces.* A high friction surface immediately followed by a low friction surface.

(b) *Initial brake temperature.* Initial brake temperature is ≥ 55 °C and ≤ 100 °C.

(c) *Test speed.* The speed that will result in 50 km/h or 0.5 Vmax, whichever is the lower, at the point where the vehicle passes from the high friction to the low friction surface.

(d) *Brake application.*

(1) Each service brake system control actuated separately.

(2) Where ABS is fitted to both brake systems, simultaneous actuation of both brake controls in addition to (1).

(e) *Brake actuation force.* The force applied is that which is necessary to ensure that the ABS will cycle fully throughout each stop, down to 10 km/h.

(f) Number of stops: until the vehicle meets the performance requirements, with a maximum of 3 stops.

(g) For each stop, accelerate the vehicle to the test speed and then actuate the brake control before the vehicle reaches the transition from one friction surface to the other.

S6.9.6.2 *Performance requirements.* When the brakes are tested in accordance with the test procedures set out in S6.9.6.1, there shall be no wheel lock beyond that allowed for in paragraph S6.9.1(d), and the vehicle wheels shall stay within the test lane.

S6.9.7 *Wheel lock check—low to high friction surface transition.*

S6.9.7.1 *Test conditions and procedure.*

(a) *Test surfaces.* A low friction surface immediately followed by a high friction surface with a PBC ≥ 0.8.

(b) *Initial brake temperature.* Initial brake temperature is ≥55 °C and ≤100 °C.

(c) *Test speed.* The speed that will result in 50 km/h or 0.5 Vmax, whichever is the lower, at the point where the vehicle passes from the low friction to the high friction surface.

(d) *Brake application.*

(1) Each service brake system control applied separately.

(2) Where ABS is fitted to both brake systems, simultaneous application of both brake controls in addition to (1).

(e) *Brake actuation force.* The force applied is that which is necessary to ensure that the ABS will cycle fully throughout each stop, down to 10 km/h.

(f) Number of stops: until the vehicle meets the performance requirements, with a maximum of 3 stops.

(g) For each stop, accelerate the vehicle to the test speed and then actuate the brake control before the vehicle reaches the transition from one friction surface to the other.

(h) Record the vehicle's continuous deceleration.

S6.9.7.2 *Performance requirements.* When the brakes are tested in accordance with the test procedures set out in S6.9.7.1:

(a) There shall be no wheel lock beyond that allowed for in paragraph S6.9.1(d), and the vehicle wheels shall stay within the test lane, and

(b) within 1 second of the rear wheel passing the transition point between the low and high friction surfaces, the vehicle deceleration shall increase.

S6.9.8 *Stops with an ABS electrical failure.*

S6.9.8.1 *Test conditions and procedure.* With the ABS electrical system disabled, carry out the test set out in S6.3 (dry stop test—single brake control actuated) applying the conditions relevant to the brake system and vehicle being tested.

S6.9.8.2 *Performance requirements.* When the brakes are tested in accordance with the test procedure set out in S6.9.8.1:

(a) The system shall comply with the failure warning requirements of S5.1.10.2; and

(b) the minimum requirements for stopping distance shall be as specified in column 2 under the heading ''Single brake system, rear wheel(s) braking only'' in Table 2.

S6.10 *Partial failure test—for split service brake systems.*

S6.10.1 *General information.*

(a) The test is only applicable to vehicles that are equipped with split service brake systems.

(b) The test is to confirm the performance of the remaining subsystem

in the event of a hydraulic system leakage failure.

S6.10.2 *Vehicle condition.*

(a) The test is applicable to motorcycle categories 3–3, 3–4 and 3–5.

(b) Lightly loaded.

(c) Engine disconnected.

S6.10.3 *Test conditions and procedure.*

(a) *Initial brake temperature.* Initial brake temperature is ≥ 55 °C and ≤ 100 °C.

(b) *Test speed.* Test speed is 50 km/h and 100 km/h or 0.8 Vmax, whichever is lower.

(c) Brake actuation force.

(1) Hand control: ≤ 250 N.

(2) Foot control: ≤ 400 N.

(d) Number of stops: until the vehicle meets the performance requirements, with a maximum of 6 stops for each test speed.

(e) Alter the service brake system to induce a complete loss of braking in any one subsystem. Then, for each stop, accelerate the vehicle to the test speed and then actuate the brake control under the conditions specified in this paragraph.

(f) Repeat the test for each subsystem.

S6.10.4 *Performance requirements.* When the brakes are tested in accordance with the test procedure set out in S6.10.3:

(a) the system shall comply with the failure warning requirements set out in paragraph S5.1.10.1; and

(b) the stopping distance (S) shall be $\leq 0.1\ V + 0.0117\ V^2$ (where V is the specified test speed in km/h and S is the required stopping distance in meters).

S6.11 *Power-assisted braking system failure test.*

S6.11.1 *General information.*

(a) The test is not conducted when the vehicle is equipped with another separate service brake system.

(b) The test is to confirm the performance of the service brake system in the event of failure of the power assistance.

S6.11.2 *Test conditions and procedure.* Carry out the test set out in S6.3.3 (dry stop test—single brake control actuated) for each service brake system with the power assistance disabled.

S6.11.3 *Performance requirements.* When the brakes are tested in accordance with the test procedure set out in S6.11.2, the stopping distance shall be as specified in column 2 of Table 4. Note that if the power assistance may be activated by more than one control, the above performance shall be achieved when each control is actuated separately.

Tables and Figures to § 571.122

TABLE 1—TEST SEQUENCE

Test order	Paragraph
1. Dry stop—single brake control actuated	S6.3
2. Dry stop—all service brake controls actuated	S6.4
3. High speed	S6.5
4. Wet brake	S6.6
5. If fitted:	
6.1. Parking brake system	S6.8
6.2. ABS	S6.9
6.3. Partial failure, for split service brake systems	S6.10
6.4. Power-assisted braking system failure	S6.11
6. Heat fade	S6.7

TABLE 2—PERFORMANCE REQUIREMENTS, DRY STOP TEST—SINGLE BRAKE CONTROL ACTUATED

Column 1	Column 2
Motorcycle category	Stopping Distance(s) (where V is the specified test speed in km/h and S is the required stopping distance in meters)
Single brake system, front wheel(s) braking only	
3–1	$S \leq 0.1\ V + 0.0111\ V^2$.
3–2	$S \leq 0.1\ V + 0.0143\ V^2$.
3–3	$S \leq 0.1\ V + 0.0087\ V^2$.
3–4	$S \leq 0.1\ V + 0.0105\ V^2$.
3–5	Not applicable.
Single brake system, rear wheel(s) braking only	
3–1	$S \leq 0.1\ V + 0.0143\ V^2$.
3–2	$S \leq 0.1\ V + 0.0143\ V^2$.
3–3	$S \leq 0.1\ V + 0.0133\ V^2$.
3–4	$S \leq 0.1\ V + 0.0105\ V^2$.
3–5	Not applicable.
Vehicles with CBS or split service brake systems: For laden and lightly loaded conditions	
3–1 and 3–2	$S \leq 0.1\ V + 0.0087\ V^2$.
3–3	$S \leq 0.1\ V + 0.0076\ V^2$.
3–4	$S \leq 0.1\ V + 0.0071\ V^2$.

TABLE 2—PERFORMANCE REQUIREMENTS, DRY STOP TEST—SINGLE BRAKE CONTROL ACTUATED—Continued

Column 1	Column 2
Motorcycle category	Stopping Distance(s) (where V is the specified test speed in km/h and S is the required stopping distance in meters)
3–5	$S \leq 0.1\ V + 0.0077\ V^2$.
Vehicles with CBS—secondary service brake system	
ALL	$S \leq 0.1\ V + 0.0154\ V^2$.

TABLE 3—ABS TESTS

ABS Tests	Paragraph
a. Stops on a high friction surface—as specified in S6.1.1.1	S6.9.3
b. Stops on a low friction surface—as specified in S6.1.1.2	S6.9.4
c. Wheel lock checks on high and low friction surfaces	S6.9.5
d. Wheel lock check—high to low friction surface transition	S6.9.6
e. Wheel lock check—low to high friction surface transition	S6.9.7
f. Stops with an ABS electrical failure	S6.9.8

TABLE 4—PERFORMANCE REQUIREMENTS, POWER-ASSISTED BRAKING SYSTEM FAILURE TEST

Column 1	Column 2
Vehicle category	Stopping Distance(s) (where V is the specified test speed in km/h and S is the required stopping distance in meters)
Single brake system	
3–1	$S \leq 0.1\ V + 0.0143\ V^2$.
3–2	$S \leq 0.1\ V + 0.0143\ V^2$.
3–3	$S \leq 0.1\ V + 0.0133\ V^2$.
3–4	$S \leq 0.1\ V + 0.0105\ V^2$.
Vehicles with CBS or split service brake systems	
All	$S \leq 0.1\ V + 0.0154\ V^2$.

BILLING CODE P

Figure 1. Hand control lever force application points and direction.

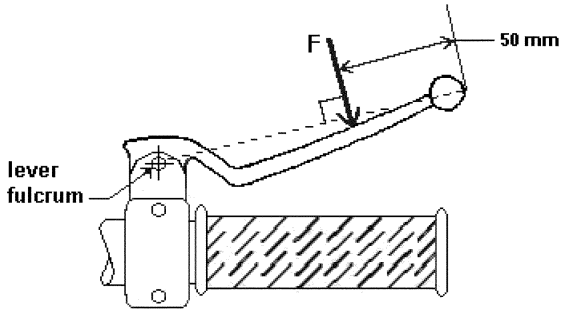

Figure 2. Typical Plug Type Thermocouple Installations

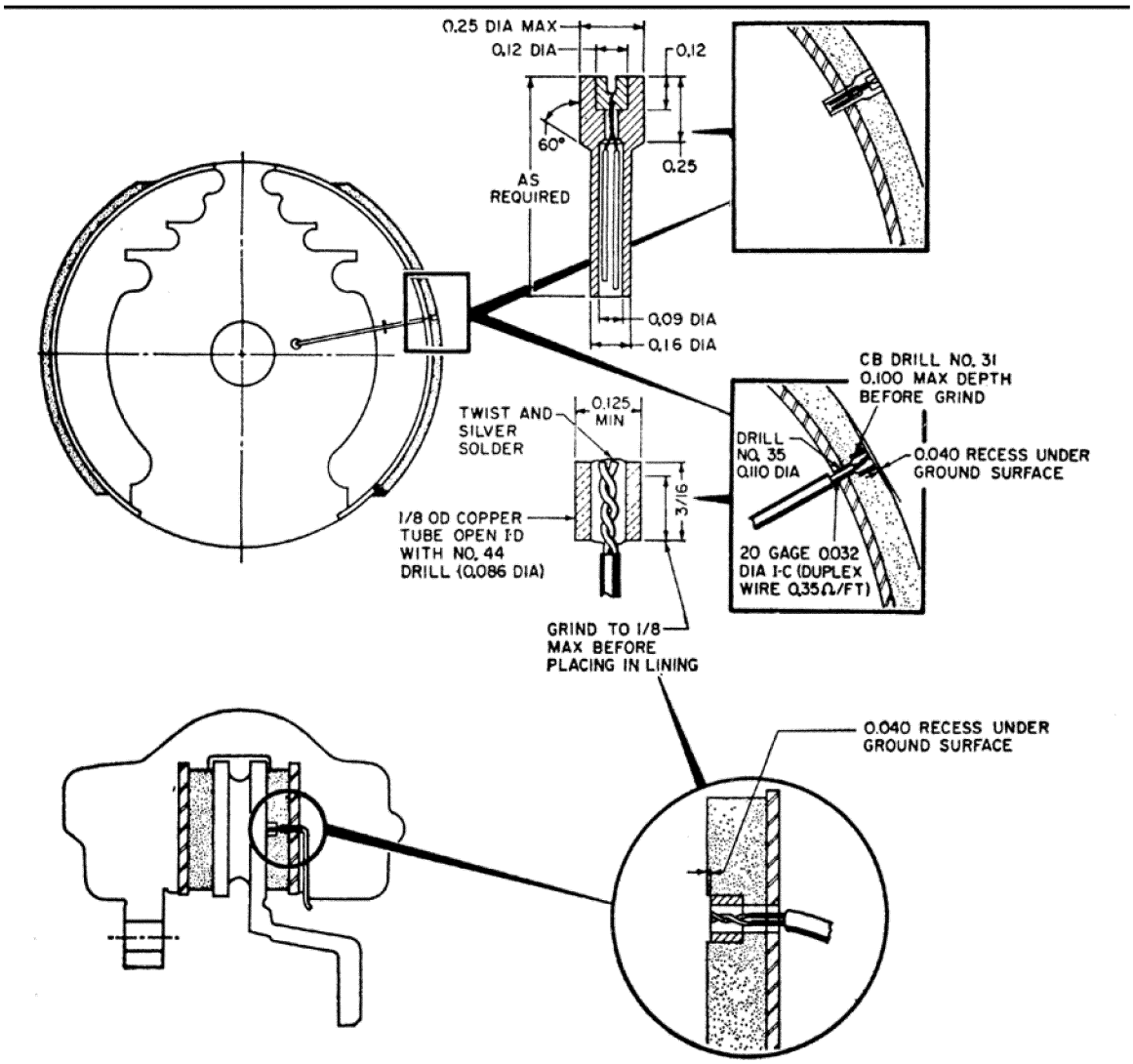

Figure 3. Wet brake test.

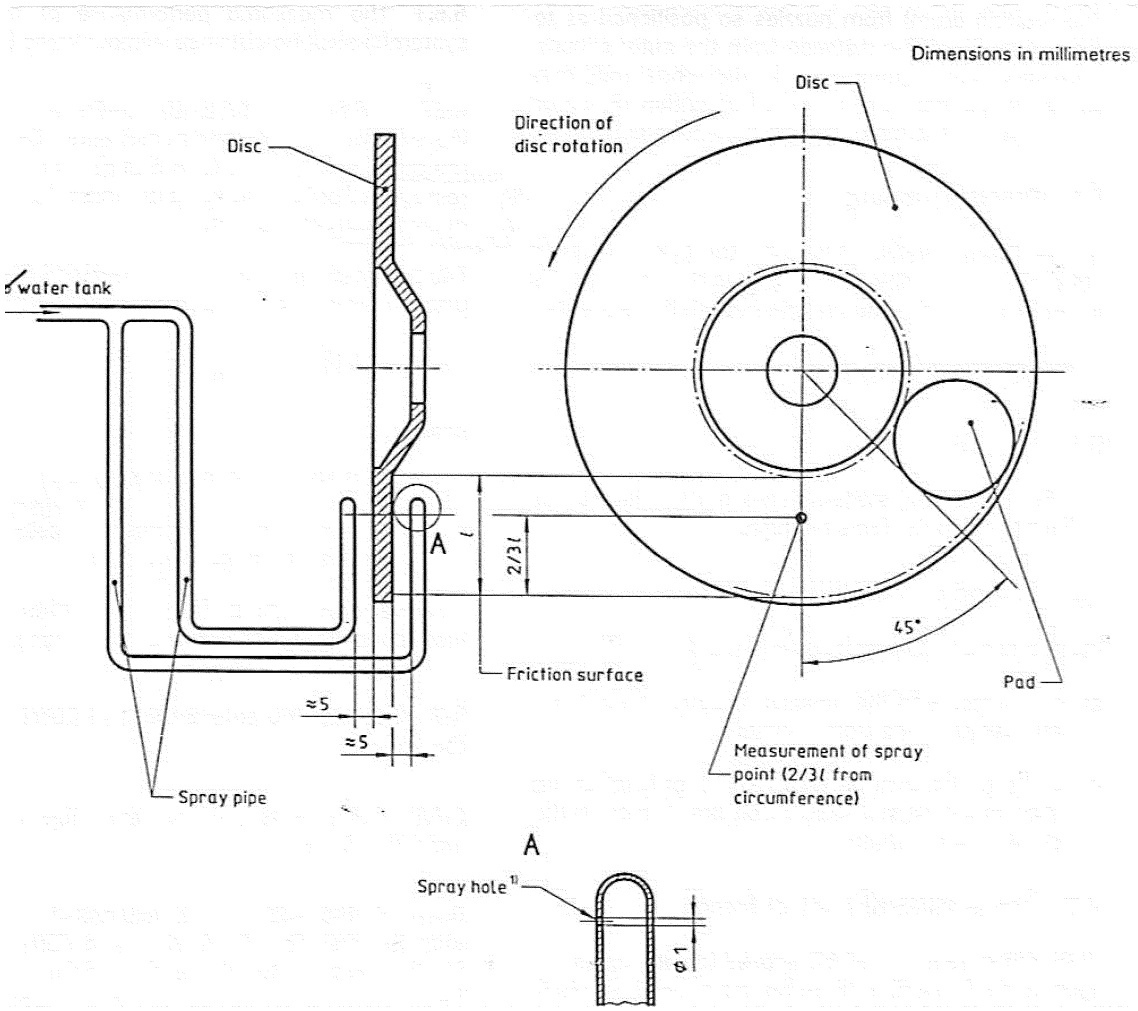

Issued on: August 14, 2012.

David L. Strickland,

Administrator.

[FR Doc. 2012–20480 Filed 8–23–12; 8:45 am]

BILLING CODE C

Reader Aids

Federal Register

Vol. 77, No. 165

Friday, August 24, 2012

CUSTOMER SERVICE AND INFORMATION

Federal Register/Code of Federal Regulations	
General Information, indexes and other finding aids	**202–741–6000**
Laws	**741–6000**
Presidential Documents	
Executive orders and proclamations	**741–6000**
The United States Government Manual	**741–6000**
Other Services	
Electronic and on-line services (voice)	**741–6020**
Privacy Act Compilation	**741–6064**
Public Laws Update Service (numbers, dates, etc.)	**741–6043**
TTY for the deaf-and-hard-of-hearing	**741–6086**

ELECTRONIC RESEARCH

World Wide Web

Full text of the daily Federal Register, CFR and other publications is located at: **www.fdsys.gov.**

Federal Register information and research tools, including Public Inspection List, indexes, and links to GPO Access are located at: **www.ofr.gov.**

E-mail

FEDREGTOC-L (Federal Register Table of Contents LISTSERV) is an open e-mail service that provides subscribers with a digital form of the Federal Register Table of Contents. The digital form of the Federal Register Table of Contents includes HTML and PDF links to the full text of each document.

To join or leave, go to **http://listserv.access.gpo.gov** and select *Online mailing list archives, FEDREGTOC-L, Join or leave the list (or change settings);* then follow the instructions.

PENS (Public Law Electronic Notification Service) is an e-mail service that notifies subscribers of recently enacted laws.

To subscribe, go to **http://listserv.gsa.gov/archives/publaws-l.html** and select *Join or leave the list (or change settings);* then follow the instructions.

FEDREGTOC-L and **PENS** are mailing lists only. We cannot respond to specific inquiries.

Reference questions. Send questions and comments about the Federal Register system to: **fedreg.info@nara.gov**

The Federal Register staff cannot interpret specific documents or regulations.

Reminders. Effective January 1, 2009, the Reminders, including Rules Going Into Effect and Comments Due Next Week, no longer appear in the Reader Aids section of the Federal Register. This information can be found online at **http://www.regulations.gov.**

CFR Checklist. Effective January 1, 2009, the CFR Checklist no longer appears in the Federal Register. This information can be found online at **http://bookstore.gpo.gov/.**

FEDERAL REGISTER PAGES AND DATE, AUGUST

45469–45894 1
45895–46256 2
46257–46600 3
46601–46928 6
46929–47266 7
47267–47510 8
47511–47766 9
47767–48044 10
48045–48418 13
48419–48854 14
48855–49344 15
49345–49700 16
49701–49990 17
49991–50370 20
50371–50560 21
50561–50902 22
50903–51458 23
51459–51680 24

CFR PARTS AFFECTED DURING AUGUST

At the end of each month the Office of the Federal Register publishes separately a List of CFR Sections Affected (LSA), which lists parts and sections affected by documents published since the revision date of each title.

3 CFR

Proclamations:
8844 45477
8845 45895
8846 47763
8847 47765

Executive Orders:
13621 45471
13622 45897
13623 49345

Administrative Orders:
Presidential Determinations:
No. 2012–13 of August 10, 2012 50557
Notices:
Notice of July 17, 2012 (Correction) 45469
Notice of August 15, 2012 49699

5 CFR

7501 46601

Proposed Rules:
Ch. XXII 47328

6 CFR

5 ..... 40000, 47767

7 CFR

59 50561
205 45903
253 50903
272 48045
273 48045
782 51459

Proposed Rules:
278 48461
279 48461
319 46339

8 CFR

Proposed Rules:
235 47558

10 CFR

2 46562
11 46257
12 46562
25 46257
51 46562
54 46562
61 46562
430 49701
431 49701

Proposed Rules:
61 48107
Ch. II 47328
429 ..... 49064, 49739
430 ..... 48108, 49064, 49739
Ch. III 47328
Ch. X 47328

12 CFR

234 45907
235 46258
1005 50244
1072 46606

Proposed Rules:
1002 50390
1005 50404
1024 ..... 49090, 51116
1026 ..... 49090, 51116

13 CFR

Ch. 1 ..... 46806, 46855
121 49991

14 CFR

21 45921
27 ..... 48058, 50576
29 50576
39 ..... 46929, 46932, 46935, 46937, 46940, 46943, 46946, 47267, 47273, 47275, 47277, 48419, 48420, 48423, 48425, 48427, 49702, 49705, 49708, 49710, 50371, 50577, 50582, 51459, 51462
71 ..... 46282, 46283, 46284, 48060, 49712, 49719, 49720, 50907, 51464
95 50909
97 ..... 45922, 45925, 50012, 50014
400 50584

Proposed Rules:
39 ..... 45513, 45518, 45979, 45981, 46340, 46343, 47329, 47330, 47563, 47568, 47570, 48110, 48469, 48473, 49386, 49389, 49394, 49396, 50054, 50407, 50411, 50414, 50644, 50954
43 49740
71 ..... 45983, 45984, 45985, 45987, 48476, 49399, 49400, 50417, 50419, 50646, 50647, 50648, 50656
91 ..... 49740, 50420
97 50420
121 50420
125 50420
129 50420
135 50420
145 49740
400 50956
401 50956

15 CFR

774 ..... 45927, 46948, 48429
801 49721

Proposed Rules:
90 47783

922 46985
1400 46346

16 CFR

Proposed Rules:
23 50056
312 46643
801 50057

17 CFR

1 48208
43 48060
230 48208
240 ....48208, 50016
241 48208
Proposed Rules:
39 50425
50 47170

18 CFR

Proposed Rules:
35 46986

19 CFR

12 45479
Proposed Rules:
12 48918
163 48918
178 48918
Ch. II 47572
351 50963

21 CFR

16 50372
20 50589
118 50372
500 50591
510 ....46612, 47511
520 47511
522 46612
524 ....46612, 47511
807 45927
Proposed Rules:
Ch. I 48491

24 CFR

25 51465
30 51465
201 51465
202 51465
203 51465
206 51465

25 CFR

502 47513
537 47514
571 47516
573 47517

26 CFR

1 ....45480, 50373
Proposed Rules:
1 ....45520, 46987, 51496
40 47573
46 47573
51 ....46653, 48111
301 48922

29 CFR

1614 51469
1910 46948
1926 ....46948, 49722
2700 48429
2701 48429
2702 48429
2704 48429
2705 48429
2706 48429
4022 48855
Proposed Rules:
1 47787
1926 49741

30 CFR

250 50856
Proposed Rules:
935 46346

32 CFR

Proposed Rules:
323 46653

33 CFR

100 ....46285, 47279, 47519, 47520, 47522, 50373
110 50914
117 ....46285, 46286, 47282, 47524, 47525, 50016, 50017, 50376, 51470
165 ....45488, 45490, 46285, 46287, 46613, 47282, 47284, 47525, 48431, 48856, 49349, 49351, 49730, 50017, 50018, 50019, 50373, 50593, 50916, 50919, 50921, 50923, 50926, 50929, 51471, 51473, 51475
Proposed Rules:
110 45988
165 ....50062, 50065, 50444
117 ....47787, 47789, 47792
161 45911
165 ....45911, 46349, 47331, 47334, 49401

34 CFR

Ch. III 45991, 47496
Proposed Rules:
Ch. III 46658

36 CFR

Proposed Rules:
218 47337
1192 50068

37 CFR

1 ....46615, 48612, 48776, 48828, 49354
3 ....48612, 48776
5 ....46615, 48776
6 47528
10 ....46615, 48776
11 46615
41 ....46615, 48776
42 ....48612, 48680, 48734, 48756
90 48612

38 CFR

Proposed Rules:
3 47795

39 CFR

20 50932
241 46950

40 CFR

1 46289
9 ....46289, 48858
49 ....48878, 51620
52 ....45492, 45949, 45954, 45956, 45958, 45962, 45965, 46952, 46960, 46961, 47530, 47533, 47535, 47536, 48061, 48062, 50021, 50033, 50378, 50595, 50602, 50608, 50611, 50936
60 ....48433, 49490
63 ....45967, 49490
81 ....46295, 48062, 50033
82 47768
98 ....48072, 51477
131 46298
150 46289
164 46289
174 47287
178 46289
179 46289
180 ....45495, 45498, 46304, 46306, 47291, 47296, 47539, 48899, 48902, 48907, 49732, 50613, 50617
268 50622
271 ....47302, 47779
272 46964
300 ....45968, 50038, 50044
700 46289
712 46289
716 46289
720 46289
721 48858
723 46289
725 46289
761 46289
763 46289
766 46289
795 46289
796 46289
799 46289
Proposed Rules:
49 48923
52 ....45523, 45527, 45530, 45532, 45992, 46008, 46352, 46361, 46664, 46672, 46990, 47573, 47581, 49308, 49404, 50446, 50651, 50660, 50964, 50966, 50969, 50973
60 46371
63 46371
152 47351
158 47351
161 47351
168 47351
180 ....45535, 50661
271 47797
272 46994
300 ....46009, 50069, 50070
721 48924

41 CFR

Proposed Rules:
102–37 50447

44 CFR

64 46968
65 50626
67 ....46972, 46980, 49360, 49367, 49373, 49379
Proposed Rules:
67 ....46994, 50665, 50667, 50668

45 CFR

162 48008
Proposed Rules:
1606 46995
1618 46995
1623 46995

46 CFR

2 47544
Proposed Rules:
401 ....45539, 47582

47 CFR

0 48090
1 ....46307, 50628
15 48097
25 ....50049, 50628
51 48448
54 48453
73 ....46631, 50053, 50630
79 ....46632, 48102
90 45503
Proposed Rules:
1 49749
2 45558
73 50071
76 50071
90 45558

48 CFR

3001 50631
3002 50631
3003 50631
3004 50631
3005 50631
3006 50631
3012 50631
3018 50631
3022 50631
3023 50631
3033 50631
3035 50631
3036 50631
3042 50631
3045 50631
3052 50631
3053 50631
Proposed Rules:
4 51496
7 51496
12 51496
19 47797
35 47797
42 51496
52 51496
3016 50449
3052 50449
Ch. 10 50454

49 CFR

1 49764
375 48460
385 49384
393 46633
395 46640
563 47552
571 ....48105, 51650
580 50381
594 50637
Proposed Rules:
171 49168
172 49168
173 49168
175 49168
176 49168
178 49168
190 48112
192 48112
193 48112
195 48112

199 48112
214 50324
383 46010
535 51499
544 50671
580 50071
563 48492
567 46677

50 CFR

17 ....45870, 46158, 48368
218 50290
223 48108
622 50388
635 47303
640 50642
648 48915
660 ....45508, 47318, 47322, 50952
679 ....46338, 46641, 48916, 50389

Proposed Rules:

17 ....47003, 47011, 47352, 47583, 47587, 48934, 49602, 49894, 50214, 50768
20 ....49680, 49868
223 45571
224 45571
424 51503
622 50672
665 46014
679 47356

LIST OF PUBLIC LAWS

This is a continuing list of public bills from the current session of Congress which have become Federal laws. It may be used in conjunction with "P L U S" (Public Laws Update Service) on 202–741–6043. This list is also available online at *http://www.archives.gov/federal-register/laws*.

The text of laws is not published in the **Federal Register** but may be ordered in "slip law" (individual pamphlet) form from the Superintendent of Documents, U.S. Government Printing Office, Washington, DC 20402 (phone, 202–512–1808). The text will also be made available on the Internet from GPO's Federal Digital System (FDsys) at *http://www.gpo.gov/fdsys*. Some laws may not yet be available.

H.R. 1402/P.L. 112–170

To authorize the Architect of the Capitol to establish battery recharging stations for privately owned vehicles in parking areas under the jurisdiction of the House of Representatives at no net cost to the Federal Government. (Aug. 16, 2012; 126 Stat. 1303)

H.R. 3670/P.L. 112–171

To require the Transportation Security Administration to comply with the Uniformed Services Employment and Reemployment Rights Act. (Aug. 16, 2012; 126 Stat. 1306)

H.R. 4240/P.L. 112–172

Ambassador James R. Lilley and Congressman Stephen J. Solarz North Korea Human Rights Reauthorization Act of 2012 (Aug. 16, 2012; 126 Stat. 1307)

S. 3510/P.L. 112–173

To prevent harm to the national security or endangering the military officers and civilian employees to whom internet publication of certain information applies, and for other purposes. (Aug. 16, 2012; 126 Stat. 1310)

Last List August 16, 2012

Public Laws Electronic Notification Service (PENS)

PENS is a free electronic mail notification service of newly enacted public laws. To subscribe, go to *http://listserv.gsa.gov/archives/publaws-l.html*

Note: This service is strictly for E-mail notification of new laws. The text of laws is not available through this service. **PENS** cannot respond to specific inquiries sent to this address.