AUTHENTICATED
U.S. GOVERNMENT
INFORMATION
GPO

FEDERAL REGISTER

Vol. 77 Wednesday,
No. 192 October 3, 2012

Pages 60277–60602

OFFICE OF THE FEDERAL REGISTER

The **FEDERAL REGISTER** (ISSN 0097–6326) is published daily, Monday through Friday, except official holidays, by the Office of the Federal Register, National Archives and Records Administration, Washington, DC 20408, under the Federal Register Act (44 U.S.C. Ch. 15) and the regulations of the Administrative Committee of the Federal Register (1 CFR Ch. I). The Superintendent of Documents, U.S. Government Printing Office, Washington, DC 20402 is the exclusive distributor of the official edition. Periodicals postage is paid at Washington, DC.

The **FEDERAL REGISTER** provides a uniform system for making available to the public regulations and legal notices issued by Federal agencies. These include Presidential proclamations and Executive Orders, Federal agency documents having general applicability and legal effect, documents required to be published by act of Congress, and other Federal agency documents of public interest.

Documents are on file for public inspection in the Office of the Federal Register the day before they are published, unless the issuing agency requests earlier filing. For a list of documents currently on file for public inspection, see *www.ofr.gov.*

The seal of the National Archives and Records Administration authenticates the Federal Register as the official serial publication established under the Federal Register Act. Under 44 U.S.C. 1507, the contents of the **Federal Register** shall be judicially noticed.

The **Federal Register** is published in paper and on 24x microfiche. It is also available online at no charge at *www.fdsys.gov*, a service of the U.S. Government Printing Office.

The online edition of the **Federal Register** is issued under the authority of the Administrative Committee of the Federal Register as the official legal equivalent of the paper and microfiche editions (44 U.S.C. 4101 and 1 CFR 5.10). It is updated by 6:00 a.m. each day the **Federal Register** is published and includes both text and graphics from Volume 59, 1 (January 2, 1994) forward. For more information, contact the GPO Customer Contact Center, U.S. Government Printing Office. Phone 202-512-1800 or 866-512-1800 (toll free). E-mail, *gpo@custhelp.com.*

The annual subscription price for the **Federal Register** paper edition is $749 plus postage, or $808, plus postage, for a combined **Federal Register, Federal Register** Index and List of CFR Sections Affected (LSA) subscription; the microfiche edition of the **Federal Register** including the **Federal Register** Index and LSA is $165, plus postage. Six month subscriptions are available for one-half the annual rate. The prevailing postal rates will be applied to orders according to the delivery method requested. The price of a single copy of the daily **Federal Register,** including postage, is based on the number of pages: $11 for an issue containing less than 200 pages; $22 for an issue containing 200 to 400 pages; and $33 for an issue containing more than 400 pages. Single issues of the microfiche edition may be purchased for $3 per copy, including postage. Remit check or money order, made payable to the Superintendent of Documents, or charge to your GPO Deposit Account, VISA, MasterCard, American Express, or Discover. Mail to: U.S. Government Printing Office—New Orders, P.O. Box 979050, St. Louis, MO 63197-9000; or call toll free 1-866-512-1800, DC area 202-512-1800; or go to the U.S. Government Online Bookstore site, see *bookstore.gpo.gov.*

There are no restrictions on the republication of material appearing in the **Federal Register.**

How To Cite This Publication: Use the volume number and the page number. Example: 77 FR 12345.

Postmaster: Send address changes to the Superintendent of Documents, Federal Register, U.S. Government Printing Office, Washington, DC 20402, along with the entire mailing label from the last issue received.

SUBSCRIPTIONS AND COPIES

PUBLIC

Subscriptions:

Paper or fiche	**202–512–1800**
Assistance with public subscriptions	**202–512–1806**

General online information **202–512–1530; 1–888–293–6498**

Single copies/back copies:

Paper or fiche	**202–512–1800**
Assistance with public single copies	**1–866–512–1800 (Toll-Free)**

FEDERAL AGENCIES

Subscriptions:

Paper or fiche	**202–741–6005**
Assistance with Federal agency subscriptions	**202–741–6005**

FEDERAL REGISTER WORKSHOP

THE FEDERAL REGISTER: WHAT IT IS AND HOW TO USE IT

FOR: Any person who uses the Federal Register and Code of Federal Regulations.

WHO: Sponsored by the Office of the Federal Register.

WHAT: Free public briefings (approximately 3 hours) to present:

1. The regulatory process, with a focus on the Federal Register system and the public's role in the development of regulations.
2. The relationship between the Federal Register and Code of Federal Regulations.
3. The important elements of typical Federal Register documents.
4. An introduction to the finding aids of the FR/CFR system.

WHY: To provide the public with access to information necessary to research Federal agency regulations which directly affect them. There will be no discussion of specific agency regulations.

WHEN: Tuesday, October 23, 2012
9 a.m.–12:30 p.m.

WHERE: Office of the Federal Register
Conference Room, Suite 700
800 North Capitol Street, NW.
Washington, DC 20002

RESERVATIONS: (202) 741–6008

Printed on recycled paper.

Contents

Federal Register

Vol. 77, No. 192

Wednesday, October 3, 2012

African Development Foundation
NOTICES
Meetings:
Board of Directors Executive Session, 60373

Agricultural Marketing Service
NOTICES
Re-establishments and Nominations:
Advisory Committee on Universal Cotton Standards, 60373

Agriculture Department
See Agricultural Marketing Service
See Forest Service

Air Force Department
NOTICES
Privacy Act; Systems of Records, 60411–60412

Antitrust Division
NOTICES
Proposed Final Judgments and Competitive Impact Statements:
United States v. Standard Parking Corp., KSPC Holdings, Inc. and Central Parking Corp., 60461–60475

Antitrust
See Antitrust Division

Army Department
NOTICES
Privacy Act; Systems of Records, 60412

Bureau of Consumer Financial Protection
NOTICES
Privacy Act; Systems of Records, 60382–60384

Centers for Disease Control and Prevention
NOTICES
Establishment of National Public Health Surveillance and Biosurveillance Advisory Committee, 60439

Centers for Medicare & Medicaid Services
RULES
Medicare Programs:
Hospital Inpatient Prospective Payment Systems for Acute Care Hospitals and Long Term Care Hospital Prospective Payment System, etc., 60315–60317

Children and Families Administration
NOTICES
Awards of Single-Source Program Expansion Supplements under Health Profession Opportunity Grants, 60439–60440

Civil Rights Commission
NOTICES
Meetings:
Illinois Advisory Committee, 60375
Meetings; Sunshine Act, 60376

Coast Guard
RULES
Special Local Regulations:
Red Bull Flugtag Miami, Biscayne Bay; Miami, FL, 60302–60304

Commerce Department
See Industry and Security Bureau
See International Trade Administration
See National Oceanic and Atmospheric Administration
NOTICES
Agency Information Collection Activities; Proposals, Submissions, and Approvals, 60376

Copyright Office, Library of Congress
PROPOSED RULES
Verification of Statements of Account Submitted by Cable Operators and Satellite Carriers, 60333–60334

Defense Department
See Air Force Department
See Army Department
PROPOSED RULES
Federal Acquisition Regulations:
Positive Law Codification of Title 41, 60343–60372
NOTICES
36(b)(1) Arms Sales, 60384–60399
Meetings:
Defense Science Board, 60399–60400
Privacy Act; Systems of Records, 60400–60401
Revised Non-Foreign Overseas Per Diem Rates, 60401–60411

Education Department
NOTICES
Agency Information Collection Activities; Proposals, Submissions, and Approvals:
Federal Student Aid; Student Assistance General Provisions Annual Fire Safety Report, 60412–60413
Federal Student Aid; Student Assistance General Provisions Non-Title IV Revenue Requirement, 60413

Energy Department
See Federal Energy Regulatory Commission

Environmental Protection Agency
RULES
Approvals and Promulgations of Implementation Plans:
Kentucky 110(a)(1) and (2) Infrastructure Requirements for 1997 and 2006 Fine Particulate Matter National Ambient Air Quality Standards, 60307–60311
Pesticide Tolerances:
Chlorantraniliprole, 60311–60315
PROPOSED RULES
Approvals and Promulgations of Air Quality Implementation Plans:
Pennsylvania; 2002 Base Year Inventory for Pittsburgh–Beaver Valley Area, etc., 60339–60341
National Emission Standards for Hazardous Air Pollutants for Reciprocating Internal Combustion Engines:
New Source Performance Standards for Stationary Internal Combustion Engines, 60341–60343

NOTICES
Meetings:
Farm, Ranch, and Rural Communities Committee, 60430–60431
Mobile Sources Technical Review Subcommittee, 60430
Registration Review Decisions:
Agrobacterium Radiobacter Strains K84/Kerr–84 and K1026, 60431–60432

Executive Office of the President
See Presidential Documents

Farm Credit Administration
RULES
Compensation, Retirement Programs, and Related Benefits, 60582–60602

Federal Aviation Administration
RULES
Airworthiness Directives:
Pratt & Whitney (P&W) Division Turbofan Engines, 60288–60296
The Boeing Company Airplanes, 60285–60288, 60296–60301
PROPOSED RULES
Airworthiness Directives:
Airbus Airplanes, 60325–60333
DASSUALT AVIATION Airplanes, 60323–60325

Federal Bureau of Investigation
NOTICES
Meetings:
Compact Council for the National Crime Prevention and Privacy Compact, 60475

Federal Communications Commission
PROPOSED RULES
Petitions for Reconsiderations of Actions in Rulemaking Proceedings, 60343
NOTICES
Agency Information Collection Activities; Proposals, Submissions, and Approvals, 60432–60433

Federal Election Commission
NOTICES
Meetings; Sunshine Act, 60433

Federal Emergency Management Agency
NOTICES
Meetings:
National Advisory Council, 60452–60453

Federal Energy Regulatory Commission
NOTICES
Applications:
Newburgh Hydro, LLC, 60415–60416
Questar Pipeline Co., 60416
Uniontown Hydro, LLC, 60413–60414
Combined Filings, 60416–60418
Environmental Assessments; Availability, etc.:
Town of Stuyvesant, NY and Albany Engineering Corp., 60418–60419
License Applications:
Lock Plus Hydro Friends Fund XIX, LLC, 60419
Petitions for Declaratory Orders:
ITC Holdings Corp., Entergy Corp., Midwest Independent Transmission System Operator, Inc., 60419–60420
Petitions for Enforcement:
Murphy Flat Energy LLC; Murphy Flat Mesa LLC; Murphy Flat Wind LLC, 60420
Preliminary Permit Applications:
FFP Project 60 LLC, 60425
FFP Project 61 LLC, 60425
FFP Project 62 LLC, 60427
FFP Project 63 LLC, 60422
FFP Project 64 LLC, 60426
FFP Project 65 LLC, 60426
FFP Project 66 LLC, 60420
FFP Project 67 LLC, 60421
FFP Project 68 LLC, 60421
FFP Project 69 LLC, 60422
FFP Project 71 LLC, 60423
FFP Project 72 LLC, 60423
FFP Project 73 LLC, 60424
FFP Project 75 LLC, 60428
FFP Project 76 LLC, 60424
FFP Project 77 LLC, 60429
FFP Project 78 LLC, 60427
FFP Project 79 LLC, 60428
Natural Currents Energy Services, LLC, 60429
Temporary Waivers:
Brigham Oil & Gas, L.P.; Filing and Reporting Requirements, 60430

Federal Highway Administration
NOTICES
Agency Information Collection Activities; Proposals, Submissions, and Approvals, 60506–60507

Federal Maritime Commission
NOTICES
Agreements Filed, 60433–60434
Ocean Transportation Intermediary License Applicants, 60434
Ocean Transportation Intermediary License Revocations, 60434–60435

Federal Motor Carrier Safety Administration
NOTICES
Meetings:
Compliance, Safety, Accountability Subcommittee of Motor Carrier Safety Advisory Committee, 60507

Federal Reserve System
NOTICES
Formations of, Acquisitions by, and Mergers of Bank Holding Companies, 60435

Federal Retirement Thrift Investment Board
NOTICES
Meetings:
Employee Thrift Advisory Council, 60435

Fish and Wildlife Service
PROPOSED RULES
Endangered and Threatened Wildlife and Plants:
12-month Finding for the Lemmon Fleabane; Endangered Status for the Acuna Cactus and the Fickeisen Plains Cactus and Designation of Critical Habitat, 60510–60579
NOTICES
Agency Information Collection Activities; Proposals, Submissions, and Approvals:
Control and Management of Resident Canada Geese, 60455–60457

Declaration for Importation or Exportation of Fish or Wildlife, 60454–60455
Draft Midwest Wind Energy Multi-Species Habitat Conservation Plan Within Eight-State Planning Area, 60457–60458

Food and Drug Administration
RULES
New Animal Drugs:
Butorphanol; Doxapram; Triamcinolone; Tylosin, 60301–60302
NOTICES
Clinical Investigator Training Course, 60440–60441
Pediatric Studies of Sodium Nitroprusside, etc.; Availability, 60441–60442
Withdrawals of Approvals of New Animal Drug Applications:
Butorphanol; Doxapram; Triamcinolone; Tylosin, 60442

Forest Service
NOTICES
Environmental Impact Statements; Availability, etc.:
Monroe Mountain Aspen Ecosystems Restoration Project, Sevier and Piute Counties, UT, 60373–60375
Proposed New Fee Sites:
Al Taylor Cabin, Caribou–Targhee National Forest, ID, 60375

General Services Administration
PROPOSED RULES
Federal Acquisition Regulations:
Positive Law Codification of Title 41, 60343–60372

Health and Human Services Department
See Centers for Disease Control and Prevention
See Centers for Medicare & Medicaid Services
See Children and Families Administration
See Food and Drug Administration
See National Institutes of Health
See Substance Abuse and Mental Health Services Administration
NOTICES
Announcement of Requirements and Registration for Blue Button Video Challenge, 60435–60437
Final Effects of Designations of Class of Employees for Addition to Special Exposure Cohort, 60437–60438
Interest Rate on Overdue Debts, 60438
Meetings:
Health Information Technology Standards Committee, 60438–60439

Homeland Security Department
See Coast Guard
See Federal Emergency Management Agency
See U.S. Citizenship and Immigration Services
NOTICES
Appointments:
Senior Executive Service Performance Review Board; Correction, 60450–60452

Industry and Security Bureau
NOTICES
Orders Denying Export Privileges:
Anna Fermanova, 60378–60379
Jirair Avanessian, a.k.a Jirair Hijiabadi Avanessian, Jirair H. Avanessian, Jerry Avanessian, Jerry Avanes, 60377–60378
Phillip Andro Jamison, 60379–60380

Interior Department
See Fish and Wildlife Service
See Land Management Bureau
See Surface Mining Reclamation and Enforcement Office
NOTICES
Charter Renewals:
Exxon Valdez Oil Spill Public Advisory Committee, 60454

International Trade Administration
NOTICES
Renewable Energy Policy Business Roundtable in Japan, 60380

International Trade Commission
NOTICES
Antidumping and Countervailing Duty Investigations; Results, Extensions, Amendments, etc.:
Hardwood Plywood from China, 60460–60461

Justice Department
See Antitrust Division
See Federal Bureau of Investigation
See Justice Programs Office
NOTICES
Lodgings of Proposed Consent Decrees:
Clean Water Act, 60461

Justice Programs Office
NOTICES
Draft of SWGDOC Standard Classification of Typewritten Text, 60475

Land Management Bureau
NOTICES
Public Land Orders:
No. 7803; Withdrawal of Public Lands for Limestone Hills Training Area, MT, 60458

Library of Congress
See Copyright Office, Library of Congress

National Aeronautics and Space Administration
PROPOSED RULES
Federal Acquisition Regulations:
Positive Law Codification of Title 41, 60343–60372

National Archives and Records Administration
NOTICES
Privacy Act; Systems of Records, 60475–60476

National Council on Disability
NOTICES
Meetings; Sunshine Act, 60476–60477

National Institutes of Health
NOTICES
Government-Owned Inventions; Availability for Licensing, 60442–60444
Meetings:
Center for Scientific Review, 60446–60447
Eunice Kennedy Shriver National Institute of Child Health and Human Development, 60444–60445, 60447
National Institute of Arthritis and Musuloskeletal and Skin Diseases, 60447
National Institute of Environmental Health Sciences, 60445–60448

National Institute of General Medical Sciences, 60444–60448
National Institute on Aging, 60447
Office of the Director, National Institutes of Health, 60445–60446

National Oceanic and Atmospheric Administration
RULES
Fisheries of the Exclusive Economic Zone Off Alaska:
Pollock in Statistical Area 620 in Gulf of Alaska, 60321–60322
Harbor Porpoise Take Reduction Plan:
Coastal Gulf of Maine Closure Area Established with Temporary Shift of Its Effective Date, 60319–60321
NOTICES
Meetings:
Caribbean Fishery Management Council, 60380–60381
Migratory Bird Conservation; Executive Order 13186, 60381–60382

National Science Foundation
NOTICES
Antarctic Conservation Act Permit Applications, 60477–60478
Meetings:
Proposal Review Panel for Computing Communication Foundations, 60478

Nuclear Regulatory Commission
NOTICES
Draft Regulatory Guides:
Control of Ferrite Content in Stainless Steel Weld Metal, 60478–60479
Interim Staff Guidance; Issuances:
Burnup Credit in Criticality Safety Analyses of Pressurized Water Reactor Spent Fuel in Transportation and Storage Casks, 60479–60480
Meetings:
Advisory Committee on Reactor Safeguards, Subcommittee on Reliability and PRA, 60480–60481
Subcommittee on Digital Instrumentation and Control Systems, Advisory Committee on Reactor Safeguards, 60480
Regulatory Guides:
Design, Inspection, and Testing Criteria for Air Filtration and Adsorption Units, etc.; Light Water Cooled Nuclear Power Plants, 60481–60482
Regulatory Guides; Withdrawals:
Material Control and Accounting for Uranium Enrichment Facilities Authorized to Produce Special Nuclear Material of Low Strategic Significance, 60482
Staff Evaluation Exemptions:
Yankee Atomic Electric Co., Yankee Rowe Independent Spent Fuel Storage Installation, 60482–60484

Postal Service
PROPOSED RULES
New Marking Standards for Parcels Containing Hazardous Materials, 60334–60339

Presidential Documents
PROCLAMATIONS
Special Observances:
Gold Star Mother's and Family's Day (Proc. 8872), 60279–60280
National Public Lands Day (Proc. 8871), 60277–60278
ADMINISTRATIVE ORDERS
Wind Farm Project Companies, Four U.S.; Acquisition by Ralls Corporation (Order of September 28, 2012), 60281–60283

Securities and Exchange Commission
NOTICES
Agency Information Collection Activities; Proposals, Submissions, and Approvals, 60484
Applications:
PowerShares Exchange-Traded Fund Trust, et al., 60484–60488
Self-Regulatory Organizations; Proposed Rule Changes:
BOX Options Exchange LLC, 60491–60496
C2 Options Exchange, Inc., 60504–60506
Chicago Board Options Exchange, Inc., 60489–60491–60496–60500
EDGA Exchange, Inc., 60500–60502
EDGX Exchange, Inc., 60502–60504

State Department
NOTICES
Culturally Significant Objects Imported for Determinations:
Light and Shadows – The Story of Iranian Jews, 60506

Substance Abuse and Mental Health Services Administration
NOTICES
Agency Information Collection Activities; Proposals, Submissions, and Approvals:
Registration of Mortgage Loan Originators; Withdrawal, 60448–60449
List of Laboratories, etc., that Meet Minimun Standards to Conduct Urine Drug Testing for Federal Agencies, 60449–60450

Surface Mining Reclamation and Enforcement Office
NOTICES
Agency Information Collection Activities; Proposals, Submissions, and Approvals, 60459–60460

Transportation Department
See Federal Aviation Administration
See Federal Highway Administration
See Federal Motor Carrier Safety Administration
RULES
Procedures for Transportation Workplace Drug and Alcohol Testing Programs:
6–acetylmorphine (6–AM) Testing, 60318–60319

U.S. Citizenship and Immigration Services
NOTICES
Agency Information Collection Activities; Proposals, Submissions, and Approvals:
Sponsor's Notice of Change of Address, 60453–60454

Veterans Affairs Department
RULES
Servicemembers' Group Life Insurance and Veterans' Group Life Insurance—Slayer's Rule Exclusion, 60304–60307
NOTICES
Meetings:
Voluntary Service National Advisory Committee, 60507–60508

Separate Parts In This Issue

Part II
Interior Department, Fish and Wildlife Service, 60510–60579

Part III
Farm Credit Administration, 60582–60602

Reader Aids

Consult the Reader Aids section at the end of this page for phone numbers, online resources, finding aids, reminders, and notice of recently enacted public laws.

To subscribe to the Federal Register Table of Contents LISTSERV electronic mailing list, go to http://listserv.access.gpo.gov and select Online mailing list archives, FEDREGTOC-L, Join or leave the list (or change settings); then follow the instructions.

CFR PARTS AFFECTED IN THIS ISSUE

A cumulative list of the parts affected this month can be found in the Reader Aids section at the end of this issue.

3 CFR

Proclamations:

8871 60277
8872 60279

Administrative Orders:

Order of September 28, 2012 60281

12 CFR

611 60582
612 60582
619 60582
620 60582
630 60582

14 CFR

39 (3 documents) 60285, 60288, 60296

Proposed Rules:

39 (3 documents) 60323, 60325, 60331

21 CFR

510 60301
522 60301
524 60301
558 60301

33 CFR

100 60302

37 CFR

Proposed Rules:

201 60333

38 CFR

9 60304

39 CFR

Proposed Rules:

111 60334

40 CFR

52 60307
180 60311

Proposed Rules:

52 60339
63 60341

42 CFR

412 60315
413 60315
424 60315
476 60315

47 CFR

Proposed Rules:

64 60343

48 CFR

Proposed Rules:

53 60343

49 CFR

40 60318

50 CFR

229 60319
679 60321

Proposed Rules:

17 60510

Federal Register
Vol. 77, No. 192
Wednesday, October 3, 2012

Presidential Documents

Title 3—

The President

Proclamation 8871 of September 28, 2012

National Public Lands Day, 2012

By the President of the United States of America

A Proclamation

When Thomas Jefferson described the view from Monticello in 1786, he wrote, ''How sublime to look down into the workhouse of nature, to see her clouds, hail, snow, rain, thunder, all fabricated at our feet!'' Though much has changed in the years since our third President put those words to paper, the sense of awe and reverence he expressed still courses through the American spirit. Our expansive landscapes remain an inspiration for all to behold, and as an essential piece of our heritage, it is incumbent upon us to protect them not only in our time, but for all time.

Today, thousands of Americans will take up that task by volunteering to care for our public lands. Cities and communities across our country will join together to restore the lands and waters we share, and families nationwide will explore the natural splendor that stretches from our Atlantic shores to the Pacific's rocky coasts. As we take time to connect with America's great outdoors in urban and rural areas alike, we are reminded of the varied roles our public lands play in our national life. These areas boost tourism and contribute to public health; they power local economies, fuel tomorrow's energy solutions, and serve as critical havens of biodiversity; and just as they always have, our public lands remain places of irreplaceable beauty. Through the America's Great Outdoors initiative, my Administration has worked to expand access to these important spaces while ensuring they are protected for future generations, and moving forward, we will continue to advance that vital mission.

The rugged grandeur of the American landscape has helped shape our character and our soul as a Nation. As we celebrate this National Public Lands Day, let us reflect on the lands and waters that so deeply enrich our experience, and let us renew our commitment to protecting them in the years to come.

NOW, THEREFORE, I, BARACK OBAMA, President of the United States of America, by virtue of the authority vested in me by the Constitution and the laws of the United States, do hereby proclaim September 29, 2012, as National Public Lands Day. I encourage all Americans to participate in a day of public service for our lands.

IN WITNESS WHEREOF, I have hereunto set my hand this twenty-eighth day of September, in the year of our Lord two thousand twelve, and of the Independence of the United States of America the two hundred and thirty-seventh.

[FR Doc. 2012–24530
Filed 10–2–12; 8:45 am]
Billing code 3295–F3

Presidential Documents

Proclamation 8872 of September 28, 2012

Gold Star Mother's and Family's Day, 2012

By the President of the United States of America

A Proclamation

From the revolution that gave life to our Republic to the trials of our times, our men and women in uniform have put themselves in harm's way to defend the people they love and the land they cherish. Their actions attest not only to the depth of their sacrifice, but also to a belief in their country so profound they were willing to give their lives for it. Today, we pay solemn tribute to all who did. Sons and daughters, fathers and mothers, husbands and wives, they were all patriots—and with a devotion to duty that goes without equal, these proud Americans gave of themselves until they had nothing more to give.

As a grateful Nation honors our fallen service members, so do we honor the families who keep their memory burning bright. They are parents who face the loss of a child, spouses who carry an emptiness that cannot be filled, children who know sorrow that defies comprehension. The grief they hold in their hearts is a grief most cannot fully know. But as fellow Americans, we must lend our strength to those families who have given so much for our country. Their burdens are ones that no one should have to bear alone, and it is up to all of us to live our lives in a way worthy of their sacrifice.

On this day of remembrance, let us rededicate ourselves to upholding the sacred trust we share with our Gold Star families and the heroes we have laid to rest. Let us always remember that the blessings we enjoy as free people in a free society came at a dear cost. Let us hold the memories of our fallen close to our hearts, and let us mark each day by heeding the example they set. Finally, let us forever keep faith with our men and women in uniform, our veterans, and our military families by serving them as well as they have served us. Our Union endures because of their courage and selflessness, and today, we resolve anew to show them the care and support they so deeply deserve.

The Congress, by Senate Joint Resolution 115 of June 23, 1936 (49 Stat. 1985 as amended), has designated the last Sunday in September as ''Gold Star Mother's Day.''

NOW, THEREFORE, I, BARACK OBAMA, President of the United States of America, by virtue of the authority vested in me by the Constitution and the laws of the United States, do hereby proclaim September 30, 2012, as Gold Star Mother's and Family's Day. I call upon all Government officials to display the flag of the United States over Government buildings on this special day. I also encourage the American people to display the flag and hold appropriate ceremonies as a public expression of our Nation's sympathy and respect for our Gold Star Mothers and Families.

IN WITNESS WHEREOF, I have hereunto set my hand this twenty-eighth day of September, in the year of our Lord two thousand twelve, and of the Independence of the United States of America the two hundred and thirty-seventh.

[FR Doc. 2012–24532
Filed 10–2–12; 8:45 am]
Billing code 3295–F3

Presidential Documents

Order of September 28, 2012

Regarding the Acquisition of Four U.S. Wind Farm Project Companies by Ralls Corporation

By the authority vested in me as President by the Constitution and the laws of the United States of America, including section 721 of the Defense Production Act of 1950, as amended (section 721), 50 U.S.C. App. 2170,

Section 1. *Findings.* I hereby make the following findings:

(a) There is credible evidence that leads me to believe that Ralls Corporation (Ralls), a corporation organized under the laws of Delaware, and its subsidiaries, and the Sany Group (which includes Sany Electric and Sany Heavy Industries), a Chinese company affiliated with Ralls (together, the Companies); and, Mr. Dawei Duan (Mr. Duan) and Mr. Jialing Wu (Mr. Wu), citizens of the People's Republic of China and senior executives of the Sany Group, who together own Ralls; through exercising control of Lower Ridge Windfarm, LLC, High Plateau Windfarm, LLC, Mule Hollow Windfarm, LLC, and Pine City Windfarm, LLC (collectively, the Project Companies), all limited liability companies organized under the laws of Oregon, might take action that threatens to impair the national security of the United States; and

(b) Provisions of law, other than section 721 and the International Emergency Economic Powers Act (50 U.S.C. 1701 et seq.), do not, in my judgment, provide adequate and appropriate authority for me to protect the national security in this matter.

Sec. 2. *Actions Ordered and Authorized.* On the basis of the findings set forth in section 1 of this order, considering the factors described in subsection 721(f), as appropriate, and pursuant to my authority under applicable law, including section 721, I hereby order that:

(a) The transaction resulting in the acquisition of the Project Companies and their assets by the Companies or Mr. Wu or Mr. Duan is hereby prohibited, and ownership by the Companies or Mr. Wu or Mr. Duan of any interest in the Project Companies and their assets, whether directly or indirectly through owners, subsidiaries, or affiliates, is prohibited.

(b) In order to effectuate this order, Ralls shall divest all interests in:

(i) the Project Companies;

(ii) the Project Companies' assets, intellectual property, technology, personnel, and customer contracts; and

(iii) any operations developed, held, or controlled, whether directly or indirectly, by the Project Companies at the time of, or since, their acquisition not later than 90 days after the date of this order, unless such date is extended for a period not to exceed three (3) months, on such written conditions as the Committee on Foreign Investment in the United States (CFIUS) may require. Immediately upon divestment, Ralls shall certify in writing to CFIUS that such divestment has been effected in accordance with this order.

(c) No later than 14 calendar days from the date of this order, the Companies shall:

(i) remove from the properties on which the Companies have proposed to construct wind farms (including alternate sites) that are identified in the notice filed with CFIUS (Properties) all items, structures, or other

physical objects or installations of any kind (including concrete foundations) that the Companies or persons on behalf of the Companies have stockpiled, stored, deposited, installed, or affixed thereon; and

(ii) provide CFIUS with a statement signed by Mr. Duan and Mr. Wu certifying that the Companies have completed such removal.

(d) The Companies, and any persons acting for or on behalf of the Companies, including officers, employees, and owners, shall cease all access, and will not have any access, to the Properties. Notwithstanding the foregoing, individuals that are U.S. citizens contracted by the Companies and approved by CFIUS may access the Properties solely for purposes of fulfilling the requirements of subsection (c) of this section.

(e) The Companies, Mr. Duan, and Mr. Wu shall not sell or otherwise transfer, or propose to sell or otherwise transfer, or otherwise facilitate the sale or transfer of, any items made or otherwise produced by the Sany Group to any third party for use or installation at the Properties.

(f) Ralls shall not complete a sale or transfer of the Project Companies or their assets to any third party until:

(i) all items, structures, or other physical objects or installations of any kind (including concrete foundations) that the Companies or persons on behalf of the Companies have stockpiled, stored, deposited, installed, or affixed on the Properties have been removed from the Properties and the Department of Defense has notified the Companies that it has verified the Companies' certification of such removal provided pursuant to subsection (c) of this section;

(ii) Ralls notifies CFIUS in writing of the intended recipient or buyer; and

(iii) Ralls has not received a provisional or final objection from CFIUS to the intended recipient or buyer within 10 business days of the notification in subsection f(ii) of this section. Among the factors CFIUS may consider in reviewing the proposed sale or transfer are whether the buyer or transferee: is a U.S. citizen or is owned by U.S. citizens; has or has had a direct or indirect contractual, financial, familial, employment, or other close and continuous relationship with the Companies or Project Companies, or their officers, employees, or owners; and can demonstrate a willingness and ability to support compliance with this order.

(g) From the date of this order until Ralls provides a certification of divestment to CFIUS pursuant to subsection (b) of this section, the Companies shall certify to CFIUS on a monthly basis that they are in compliance with this order.

(h) Without limitation on the exercise of authority by any agency under other provisions of law, and until such time as the divestment is completed and verified to the satisfaction of CFIUS, CFIUS is authorized to implement measures it deems necessary and appropriate to verify that operations of the Project Companies are carried out in such a manner as to ensure protection of the national security interests of the United States. Such measures may include but are not limited to the following: on reasonable notice to the Project Companies and the Companies, employees of the United States Government, as designated by CFIUS, shall be permitted access, for purposes of verifying compliance with this order, to all premises and facilities of the Project Companies and the Companies located in the United States:

(i) to inspect and copy any books, ledgers, accounts, correspondence, memoranda, and other records and documents in the possession or under the control of the Companies or the Project Companies that concern any matter relating to this order;

(ii) to inspect any equipment and technical data (including software) in the possession or under the control of the Companies or the Project Companies; and

(iii) to interview officers, employees, or agents of the Companies or the Project Companies concerning any matter relating to this order.

CFIUS shall conclude its verification procedures within 90 days after the divestment is completed.

(i) The Attorney General is authorized to take any steps necessary to enforce this order.

Sec. 3. *Revocation of Prior Orders.* CFIUS's Order Establishing Interim Mitigation Measures of July 25, 2012, and Amended Order Establishing Interim Mitigation Measures of August 2, 2012, are hereby revoked.

Sec. 4. *Reservation.* I hereby reserve my authority to issue further orders with respect to the Companies or the Project Companies as shall in my judgment be necessary to protect the national security.

Sec. 5. *Publication and Transmittal.*

(a) This order shall be published in the *Federal Register*.

(b) I hereby direct the Secretary of the Treasury to transmit a copy of this order to the appropriate parties named in section 1 of this order.

THE WHITE HOUSE,
Washington, September 28, 2012.

[FR Doc. 2012–24533
Filed 10–2–12; 8:45 am]
Billing code 3295–F3

Rules and Regulations

Federal Register

Vol. 77, No. 192

Wednesday, October 3, 2012

This section of the FEDERAL REGISTER contains regulatory documents having general applicability and legal effect, most of which are keyed to and codified in the Code of Federal Regulations, which is published under 50 titles pursuant to 44 U.S.C. 1510.

The Code of Federal Regulations is sold by the Superintendent of Documents. Prices of new books are listed in the first FEDERAL REGISTER issue of each week.

DEPARTMENT OF TRANSPORTATION

Federal Aviation Administration

14 CFR Part 39

[Docket No. FAA–2012–0424; Directorate Identifier 2011–NM–004–AD; Amendment 39–17205; AD 2012–19–10]

RIN 2120–AA64

Airworthiness Directives; The Boeing Company Airplanes

AGENCY: Federal Aviation Administration (FAA), DOT.

ACTION: Final rule.

SUMMARY: We are adopting a new airworthiness directive (AD) for certain of The Boeing Company Model 777 airplanes. This AD was prompted by heat damage and cracks at the pivot joint location of the main landing gear (MLG) inner cylinder/truck beam. This AD requires repetitive lubrication of the MLG pivot joints; repetitive detailed inspections of the outer diameter chrome on the center axles of the MLG for chicken-wire cracks, corrosion, and chrome plate distress; repetitive magnetic particle inspections of the outer diameter chrome on the center axles of the MLG for cracks; and related investigative and corrective actions if necessary. We are issuing this AD to detect and correct cracking in the MLG center axle and shock strut inner cylinder lugs (pivot joint), which could result in fracture of the MLG pivot joint components and consequent collapse of the MLG.

DATES: This AD is effective November 7, 2012.

The Director of the **Federal Register** approved the incorporation by reference of certain publications listed in the AD as of November 7, 2012.

ADDRESSES: For service information identified in this AD, contact Boeing Commercial Airplanes, Attention: Data & Services Management, P.O. Box 3707, MC 2H–65, Seattle, WA 98124–2207; phone: 206–544–5000, extension 1; fax: 206–766–5680; Internet *https://www.myboeingfleet.com.* You may review copies of the referenced service information at the FAA, Transport Airplane Directorate, 1601 Lind Avenue SW., Renton, WA. For information on the availability of this material at the FAA, call 425–227–1221.

Examining the AD Docket

You may examine the AD docket on the Internet at *http://www.regulations.gov;* or in person at the Docket Management Facility between 9 a.m. and 5 p.m., Monday through Friday, except Federal holidays. The AD docket contains this AD, the regulatory evaluation, any comments received, and other information. The address for the Docket Office (phone: 800–647–5527) is Document Management Facility, U.S. Department of Transportation, Docket Operations, M–30, West Building Ground Floor, Room W12–140, 1200 New Jersey Avenue SE., Washington, DC 20590.

FOR FURTHER INFORMATION CONTACT: Melanie Violette, Aerospace Engineer, Airframe Branch, ANM–120S, FAA, Seattle Aircraft Certification Office (ACO), 1601 Lind Avenue SW., Renton, WA 98057–3356; phone: 425–917–6422; fax: 425–917–6590; email: *Melanie.violette@faa.gov.*

SUPPLEMENTARY INFORMATION:

Discussion

We issued a notice of proposed rulemaking (NPRM) to amend 14 CFR part 39 to include an AD that would apply to the specified products. That NPRM published in the **Federal Register** on May 1, 2012 (77 FR 25647). That NPRM proposed to require repetitive lubrication of the MLG pivot joints; repetitive detailed inspections of the outer diameter chrome on the center axles of the MLG for chicken-wire cracks, corrosion, and chrome plate distress; repetitive magnetic particle inspections of the outer diameter chrome on the center axles of the MLG for cracks; and related investigative and corrective actions if necessary.

Comments

We gave the public the opportunity to participate in developing this AD. The following presents the comments received on the proposal (77 FR 24647, May 1, 2012), and the FAA's response to each comment.

Support for the NPRM (77 FR 25647, May 1, 2012)

United Airlines agrees with the intent of the NPRM (77 FR 24647, May 1, 2012).

Requests to Extend Compliance Time

FedEx and Air France requested that we revise the compliance time for the inspection specified in paragraph (g) of the NPRM (77 FR 25647, May 1, 2012) to coincide with the time between overhaul (TBO) of the MLG for their respective fleets. The applicable compliance time specified in the NPRM for the FedEx fleet would be 3,000 days; the TBO for the FedEx fleet is 3,650 days. The applicable compliance time specified in the NPRM for the Air France fleet would be 3,750 days; the TBO for the Air France fleet is 4,015 days. FedEx noted that, of the 28 cracked axles found during overhaul, none was fractured.

We disagree to revise the compliance time. In developing an appropriate compliance time for this AD, we considered not only the safety implications, but the manufacturer's recommendations and the practical aspect of accomplishing the required actions within an interval of time that corresponds to typical scheduled maintenance for affected operators. Under the provisions of paragraph (l) of this final rule, however, we might consider requests for adjustments to the compliance time if data is submitted to substantiate that such an adjustment would provide an acceptable level of safety. We have not changed the final rule regarding this issue.

Requests for Alternative Provisions

Boeing, FedEx, and All Nippon Airways requested that we revise paragraph (i) of the NPRM (77 FR 25647, May 1, 2012) to include an additional exception to the service information. The commenters requested that we allow the use of MIL–PRF–32014 grease as an alternative to the Royco 11MS grease for the lubrications specified in paragraph (g) of the NPRM. Boeing Alert Service Bulletin 777–32–0082, dated December 9, 2010 (referenced in the NPRM as the appropriate source of service information for this lubrication), replaces the Royco 11MS grease with

MIL–PRF–32014 grease for lubricating and installing the MLG pivot joint components.

Boeing asserted that MIL–PRF–32014 grease provides the same lubricating properties as Royco 11MS grease. Boeing and FedEx noted that use of MIL–PRF–32014 grease across the fleet will avoid intermixing grease types and prevent the need to track which grease has been applied on each airplane. FedEx reported it has already standardized to MIL–PRF–32014 grease to ensure that there is no intermixing of greases. Boeing reported that Boeing Alert Service Bulletin 777–32A0082, dated December 9, 2010, will be revised to allow use of MIL–PRF–32014 grease as an optional grease type, but this revision will not be available when the AD is issued.

We agree with the request. Both greases have the same lubricating properties and will work with the original and new bushing materials. We have added new paragraph (i)(2) in this final rule (and redesignated paragraph (i) of the NPRM (77 FR 25647, May 1, 2012) as paragraph (i)(1) of this final rule) to allow the use of either MIL–PRF–32014 or Royco 11MS grease for the lubrications required by paragraph (g) of this AD.

Requests To Include Terminating Action

FedEx, Air France, United Airlines, and All Nippon Airways requested that we revise paragraph (j) of the NPRM (77 FR 25647, May 1, 2012) to provide terminating action for the repetitive inspections specified in paragraph (g) of the NPRM. FedEx stated that airplanes after incorporation of Boeing Service Bulletin 777–32–0085, dated April 14, 2011, have the same configuration as new production airplanes. Air France stated that incorporation of Boeing Service Bulletin 777–32–0085, dated April 14, 2011, and the incorporation of Item 32–CMR–01 of Section 9, Airworthiness Limitations of the Boeing 777 Maintenance Planning Document (MPD) into the airplane maintenance program terminates the repetitive inspections specified in paragraph (g) of the NPRM by modifying the MLG and including the repetitive lubrication in the airplane maintenance program.

We agree that accomplishment of the actions specified in Boeing Service Bulletin 777–32–0085, dated April 14, 2011, involves a final inspection, modification to the MLG, and modification of the airplane maintenance program to terminate the repetitive inspections of paragraph (g) of this AD. Paragraph (j)(2) of this AD provides the optional terminating action. It is, therefore, unnecessary to revise that paragraph. We have made no changes to the AD in this regard.

Request To Clarify Specific Terminating Actions

Air France noted that the optional terminating action specified in paragraph (j)(2) of the NPRM (77 FR 25647, May 1, 2012) does not specify the inner cylinder assembly upgrade with bushing replacement, as specified in Part 2, Option 2, of the Accomplishment Instructions of Boeing Service Bulletin 777–32–0085, dated April 14, 2011.

We agree to revise the AD. Instead of identifying every action, however, we have revised paragraph (j)(2) in this final rule to require all applicable actions specified in the Accomplishment Instructions of Boeing Service Bulletin 777–32–0085, dated April 14, 2011.

Request for Warranty Support

Air France expressed concern regarding the cost of the inspection and modification program, with no industry support from Boeing. Air France noted that an unsafe condition due to normal operation would be considered a major design defect. Air France requested that Boeing propose industry support to cover the maintenance burden of the design defect.

Air France did not request any change to the AD. Further, we do not control warranty coverage for affected individuals. We have, therefore, not changed the AD regarding the estimated costs.

Request To Extend Compliance Time for On-Condition Action

Air France reported that it found the service information instructions to be complex, with a high risk of grounding airplanes due to on-condition findings and a lack of Boeing support regarding the inner cylinder assembly. Air France requested that Boeing add service extension limits in case of on-condition findings.

Air France did not specifically request a change to the AD. We cannot allow continued operation if cracking is detected, due to the safety implications and consequences of such cracking. We have not changed the final rule regarding this issue.

Request To Clarify On-Condition Actions

Boeing requested that we revise the NPRM (77 FR 25647, May 1, 2012) to clarify the related investigative and corrective actions for the inner cylinder. Boeing noted minor differences between the wording of the NPRM and the wording of Boeing Alert Service Bulletin 777–32A0082, dated December 9, 2010. Boeing requested that we revise the NPRM to more closely align with the Accomplishment Instructions of that service bulletin.

We partially agree. We agree that Boeing's proposed changes are consistent with the procedures provided in the service information specified in the preamble of the NPRM (77 FR 24647, May 1, 2012). But this level of detail is not provided in the regulatory language of this AD. Instead, the AD refers to the service information for the required procedures. It is not necessary to revise the final rule to account for this request.

Request To Correct Service Bulletin Reference

Boeing noted an incorrect reference to service information specified in the NPRM (77 FR 25647, May 1, 2012). Where the NPRM referred to ''Boeing Service Bulletin 777–32A0085,'' the correct service bulletin number is ''777–32–0085.'' We have revised paragraph (j)(2) of this AD accordingly.

Conclusion

We reviewed the relevant data, considered the comments received, and determined that air safety and the public interest require adopting the AD with the changes described previously and minor editorial changes. We have determined that these minor changes:

- Are consistent with the intent that was proposed in the NPRM (77 FR 25647, May 1, 2012) for correcting the unsafe condition; and
- Do not add any additional burden upon the public than was already proposed in the NPRM (77 FR 25647, May 1, 2012).

We also determined that these changes will not increase the economic burden on any operator or increase the scope of the AD.

Costs of Compliance

We estimate that this AD affects 160 airplanes of U.S. registry.

We estimate the following costs to comply with this AD:

ESTIMATED COSTS

Action	Labor cost	Parts cost	Cost per product	Cost on U.S. operators
Lubrication of MLG pivot joints	4 work-hours × $85 per hour = $340 per lubrication cycle.	$0	$340 per lubrication cycle.	$54,400 per lubrication cycle.
Detailed and magnetic particle inspections.	39 work-hours × $85 per hour = $3,315 per inspection cycle.	0	$3,315 per inspection cycle.	$530,400 per inspection cycle.
Inner cylinder lug bore inspection	6 work-hours × $85 per hour = $510 per inspection cycle.	0	$510 per inspection cycle.	$81,600 per inspection cycle.

We estimate the following costs to do any necessary repairs or replacements that would be required based on the results of the inspections. We have no way of determining the number of aircraft that might need these repairs or replacements.

ON-CONDITION COSTS

Action	Labor cost	Parts cost	Cost per product
Replacing center axle	25 work-hours × $85 per hour = $2,125	$54,030	$56,155.
Refinishing the lug bore and faces, and installing new bushings.	12 work-hours × $85 per hour = $1,020	Up to $3,526	Up to $4,546.
Replacing the inner cylinder assembly cylinder assembly.	46 work-hours × $85 per hour = $3,910	Up to $254,847	Up to $258,757.

Authority for This Rulemaking

Title 49 of the United States Code specifies the FAA's authority to issue rules on aviation safety. Subtitle I, section 106, describes the authority of the FAA Administrator. Subtitle VII: Aviation Programs, describes in more detail the scope of the Agency's authority.

We are issuing this rulemaking under the authority described in Subtitle VII, Part A, Subpart III, Section 44701: ''General requirements.'' Under that section, Congress charges the FAA with promoting safe flight of civil aircraft in air commerce by prescribing regulations for practices, methods, and procedures the Administrator finds necessary for safety in air commerce. This regulation is within the scope of that authority because it addresses an unsafe condition that is likely to exist or develop on products identified in this rulemaking action.

Regulatory Findings

This AD will not have federalism implications under Executive Order 13132. This AD will not have a substantial direct effect on the States, on the relationship between the national government and the States, or on the distribution of power and responsibilities among the various levels of government.

For the reasons discussed above, I certify that this AD:

(1) Is not a ''significant regulatory action'' under Executive Order 12866,

(2) Is not a ''significant rule'' under DOT Regulatory Policies and Procedures (44 FR 11034, February 26, 1979),

(3) Will not affect intrastate aviation in Alaska, and

(4) Will not have a significant economic impact, positive or negative, on a substantial number of small entities under the criteria of the Regulatory Flexibility Act.

List of Subjects in 14 CFR Part 39

Air transportation, Aircraft, Aviation safety, Incorporation by reference, Safety.

Adoption of the Amendment

Accordingly, under the authority delegated to me by the Administrator, the FAA amends 14 CFR part 39 as follows:

PART 39—AIRWORTHINESS DIRECTIVES

■ 1. The authority citation for part 39 continues to read as follows:

Authority: 49 U.S.C. 106(g), 40113, 44701.

§ 39.13 [Amended]

■ 2. The FAA amends § 39.13 by adding the following new airworthiness directive (AD):

2012–19–10 The Boeing Company: Amendment 39–17205; Docket No. FAA–2012–0424; Directorate Identifier 2011–NM–004–AD.

(a) Effective Date

This AD is effective November 7, 2012.

(b) Affected ADs

None.

(c) Applicability

This AD applies to The Boeing Company Model 777–200, –200LR, –300, –300ER, and 777F series airplanes, certificated in any category, as identified in Boeing Alert Service Bulletin 777–32A0082, dated December 9, 2010.

(d) Subject

Joint Aircraft System Component (JASC)/ Air Transport Association (ATA) of America Code 32, Landing Gear.

(e) Unsafe Condition

This AD was prompted by heat damage and cracks at the pivot joint location of the main landing gear (MLG) cylinder/truck beam. We are issuing this AD to detect and correct cracking in the MLG center axle and shock strut inner cylinder lugs (pivot joint), which could result in fracture of the MLG pivot joint components and consequent collapse of the MLG.

(f) Compliance

Comply with this AD within the compliance times specified, unless already done.

(g) Repetitive Lubrication and Inspections

At the applicable compliance times specified in paragraph 1.E., ''Compliance,'' of Boeing Alert Service Bulletin 777–32A0082, dated December 9, 2010, except as provided by paragraph (i) of this AD: Lubricate the MLG pivot joints; do a detailed inspection of the outer diameter chrome on the center axles of the MLG for chicken-wire cracks, corrosion, and chrome plate distress; do a magnetic particle inspection of the outer diameter chrome on the center axles of the MLG for cracks; and do all applicable related investigative and corrective actions; in accordance with the Accomplishment Instructions of Boeing Alert Service Bulletin 777–32A0082, dated December 9, 2010, except as provided by paragraph (i)(2) of this AD. Repeat the lubrication and inspections thereafter at the applicable interval specified in paragraph 1.E., ''Compliance,'' of Boeing

Alert Service Bulletin 777–32A0082, dated December 9, 2010. Do all applicable related investigative and corrective actions before further flight.

(h) Definition

For the purposes of this AD, chicken-wire cracks are defined as cracks that occur when stress created in the chrome deposit during plating are relieved. The cracks are evident in the deposited chrome when viewed from a perpendicular plane as a pattern similar to chicken wire. Crack size can vary with plating conditions.

(i) Exceptions to Service Information

(1) Where Boeing Alert Service Bulletin 777–32A0082, dated December 9, 2010, specifies a compliance time after the original issue date of that service bulletin, this AD requires compliance within the specified compliance time after the effective date of this AD.

(2) Where Boeing Alert Service Bulletin 777–32A0082, dated December 9, 2010, specifies use of Royco 11MS grease for the lubrication required by paragraph (g) of this AD, this AD also allows use of MIL–PRF–32014 grease.

(j) Optional Actions for Compliance With Paragraph (g) of This AD

(1) Doing the detailed and magnetic particle inspections in accordance with Part 2 of the Accomplishment Instructions of Boeing Special Attention Service Bulletin 777–32–0080, dated July 10, 2008; or Boeing Special Attention Service Bulletin 777–32–0080, Revision 1, dated April 16, 2009; is considered acceptable for compliance with the inspections of the center axle of the MLG required by paragraph (g) of this AD.

(2) Accomplishment of all applicable actions specified in and in accordance with the Accomplishment Instructions of Boeing Service Bulletin 777–32–0085, dated April 14, 2011, is considered acceptable for compliance with the requirements of paragraph (g) of this AD.

(k) Special Flight Permit

Special flight permits may be issued in accordance with sections 21.197 and 21.199 of the Federal Aviation Regulations (14 CFR 21.197 and 21.199) to operate the airplane to a location where the airplane can be modified (if the operator elects to do so), if the flight is operated as a non-revenue flight.

(l) Alternative Methods of Compliance (AMOCs)

(1) The Manager, Seattle Aircraft Certification Office (ACO), FAA, has the authority to approve AMOCs for this AD, if requested using the procedures found in 14 CFR 39.19. In accordance with 14 CFR 39.19, send your request to your principal inspector or local Flight Standards District Office, as appropriate. If sending information directly to the manager of the ACO, send it to the attention of the person identified in the Related Information section of this AD. Information may be emailed to: *9-ANM-Seattle-ACO-AMOC-Requests@faa.gov.*

(2) Before using any approved AMOC, notify your appropriate principal inspector, or lacking a principal inspector, the manager of the local flight standards district office/certificate holding district office.

(3) An AMOC that provides an acceptable level of safety may be used for any repair required by this AD if it is approved by the Boeing Commercial Airplanes Organization Designation Authorization (ODA) that has been authorized by the Manager, Seattle ACO, to make those findings. For a repair method to be approved, the repair must meet the certification basis of the airplane and the approval must specifically refer to this AD.

(m) Related Information

For more information about this AD, contact Melanie Violette, Aerospace Engineer, Airframe Branch, ANM–120S, FAA, Seattle Aircraft Certification Office (ACO), 1601 Lind Avenue SW., Renton, WA 98057–3356; phone: 425–917–6422; fax: 425–917–6590; email: *Melanie.violette@faa.gov.*

(n) Material Incorporated by Reference

(1) The Director of the Federal Register approved the incorporation by reference (IBR) of the service information listed in this paragraph under 5 U.S.C. 552(a) and 1 CFR part 51.

(2) You must use the following service information to do the actions required by this AD, unless the AD specifies otherwise.

(i) Boeing Alert Service Bulletin 777–32A0082, dated December 9, 2010.

(ii) Boeing Service Bulletin 777–32–0085, dated April 14, 2011.

(iii) Boeing Special Attention Service Bulletin 777–32–0080, dated July 10, 2008.

(iv) Boeing Special Attention Service Bulletin 777–32–0080, Revision 1, dated April 16, 2009.

(3) For service information identified in this AD, contact Boeing Commercial Airplanes, Attention: Data & Services Management, P. O. Box 3707, MC 2H–65, Seattle, WA 98124–2207; phone: 206–544–5000, extension 1; fax: 206–766–5680; Internet *https://www.myboeingfleet.com.*

(4) You may review copies of the referenced service information at the FAA, Transport Airplane Directorate, 1601 Lind Avenue SW., Renton, WA. For information on the availability of this material at the FAA, call 425–227–1221.

(5) You may also review copies of the service information that is incorporated by reference at the National Archives and Records Administration (NARA). For information on the availability of this material at NARA, call 202–741–6030, or go to *http://www.archives.gov/federal-register/cfr/ibr-locations.html.*

Issued in Renton, Washington, on September 19, 2012.

Ali Bahrami,

Manager, Transport Airplane Directorate, Aircraft Certification Service.

[FR Doc. 2012–23790 Filed 10–2–12; 8:45 am]

BILLING CODE 4910–13–P

DEPARTMENT OF TRANSPORTATION

Federal Aviation Administration

14 CFR Part 39

[Docket No. FAA–2012–0060; Directorate Identifier 2012–NE–02–AD; Amendment 39–17123; AD 2012–14–09]

RIN 2120–AA64

Airworthiness Directives; Pratt & Whitney (P&W) Division Turbofan Engines

AGENCY: Federal Aviation Administration (FAA), DOT.

ACTION: Final rule.

SUMMARY: We are adopting a new airworthiness directive (AD) for certain P&W PW4000 series turbofan engines. This AD was prompted by reports of 3rd and 4th stage vane fractures in the low-pressure turbine (LPT) of certain PW4000–94'' and PW4000–100'' turbofan engines. This AD requires dimensional inspections of LPT 3rd stage vanes and the rear turbine case, inspection of LPT 4th stage vanes at the next LPT overhaul and removal of vanes with non-conforming airfoil fillet radii and vanes with more than one strip and recoat repair. This AD also requires disassembly and reassembly of the 2nd stage high-pressure turbine (HPT) rotor and 3rd stage LPT rotor at the next HPT and LPT overhauls. We are issuing this AD to prevent 3rd and 4th stage vane fractures in the LPT, damage to the LPT rotor, uncontained engine failure, and damage to the airplane.

DATES: This AD is effective November 7, 2012.

ADDRESSES: For more information about this AD, contact James Gray, Aerospace Engineer, Engine Certification Office, FAA, Engine & Propeller Directorate, 12 New England Executive Park, Burlington, MA; phone: 781–238–7742; fax: 781–238–7199; email: *james.e.gray@faa.gov.*

Examining the AD Docket

You may examine the AD docket on the Internet at *http://www.regulations.gov;* or in person at the Docket Management Facility between 9 a.m. and 5 p.m., Monday through Friday, except Federal holidays. The AD docket contains this AD, the regulatory evaluation, any comments received, and other information. The address for the Docket Office (phone: 800–647–5527) is Document Management Facility, U.S. Department of Transportation, Docket Operations, M–30, West Building Ground Floor, Room W12–140, 1200 New Jersey Avenue SE., Washington, DC 20590.

FOR FURTHER INFORMATION CONTACT: James Gray, Aerospace Engineer, Engine Certification Office, FAA, Engine & Propeller Directorate, 12 New England Executive Park, Burlington, MA; phone: 781–238–7742; fax: 781–238–7199; email: *james.e.gray@faa.gov.*

SUPPLEMENTARY INFORMATION:

Discussion

We issued a notice of proposed rulemaking (NPRM) to amend 14 CFR part 39 to include an AD that would apply to the specified products. That NPRM published in the **Federal Register** on March 2, 2012 (77 FR 12755). That NPRM proposed to require dimensional inspections of 3rd stage vanes and the rear turbine case. That NPRM also proposed to require inspection of 4th stage vanes at the next LPT overhaul and removal of vanes with non-conforming airfoil fillet radii and vanes with more than one strip and recoat repair. That NPRM also proposed to require disassembly and reassembly of the 2nd stage HPT rotor and 3rd stage LPT rotor at the next HPT and LPT overhauls.

Comments

We gave the public the opportunity to participate in developing this AD. The following presents the comments received on the proposal and the FAA's response to each comment.

Agreement With the Proposed AD

Two commenters, Boeing and FedEx, agreed with the intent of the proposed AD.

Request To Change Compliance Time for the 4th Stage Vanes

One commenter, China Cargo Airlines, requested that we change the inspection compliance time for the LPT 4th stage vanes from ''next LPT overhaul'' to ''next engine overhaul.'' The commenter stated that LPT overhauls are typically performed every other shop visit, which could be in six-to-eight years. The commenter thought that the risk of having a 4th stage vane failure during that time was too high.

We do not agree. We determined that performing the inspections at the next LPT overhaul after the effective date of the AD provides an acceptable level of safety, and that we do not need to reduce the interval. We did not change the AD.

Request for Credit for Prior Compliance

FedEx requested that a statement be included authorizing credit for prior compliance as they have already been performing the requirements of the proposed AD.

We do not agree. Paragraph (e) of the proposed AD already allows credit for prior compliance. That paragraph states to comply with the AD within the compliance times specified, unless already done. We did not change the AD.

Request To Reference Pratt & Whitney Special Instruction No. 17F–09

One commenter, Martinair Holland, requested that we add a reference to Pratt & Whitney Special Instruction No. 17F–09 as an alternate method of compliance (AMOC) for paragraph (e)(1)(iii). The commenter stated that they have been checking the 3rd stage vanes for adequate engagement using that Special Instruction.

We do not agree. The AD requires dimensional inspections that are not included in Special Instruction No. 17F–09. Also, we do not include AMOCs in the requirements of an AD. You may, however, seek an AMOC using the procedures specified in the AD. We did not add that Special Instruction reference to the AD.

Request To Add Service Bulletins as Alternate Methods of Compliance

Martinair Holland, United Airlines, and Onur Air, requested that we add references to Pratt & Whitney Service Bulletins (SBs) PW4ENG 72–798, PW4ENG 72–804, and PW4G–100–72–221, as alternate methods of compliance to paragraph (e)(1)(v). The commenters stated that they have been inspecting the LPT 4th stage vanes using these SBs.

We do not agree. Paragraph (e) of the proposed AD states to comply with the AD within the compliance times specified, unless already done. If you have already done the proposed actions, then no further action is required to comply with paragraph (e)(1)(v). Also, as noted above, we do not include AMOCs in the requirements of an AD. We did not change the AD.

Request To Include the Part Numbers (P/Ns) of the LPT 4th Stage Vanes

Pratt & Whitney requested that we include the P/Ns of the LPT 4th stage vanes that are subject to the one-time strip and recoat requirement. The commenter stated that it is possible that future designs of LPT 4th stage vanes would not be restricted to a single strip and recoat requirement.

We agree. We listed the P/Ns of the affected LPT 4th stage vanes in the AD.

Request To Define the Word ''Guidance''

United Airlines requested that we define the word ''guidance'' which we used in paragraph (g) of the proposed AD, or, that we revise the wording to specifically detail the inspection/build procedure to be used. The commenter states that using the term ''guidance'' does not denote a specific requirement and only suggests a general direction to be followed.

We agree. Use of the word ''guidance'' in this AD may have caused confusion. We deleted the ''guidance'' paragraphs listed under Related Information from the AD.

Request To Update Guidance Service Information

Pratt & Whitney and United Parcel Service Co. (UPS) requested that we add the words ''or later'' after the service information date references in paragraph (g) of the proposed AD. They also requested that we clarify that the referenced service information could be updated, and compliance to that updated service information would be acceptable. One of the commenters was concerned that service information listed as guidance would be controlled in the same way as service information that is incorporated by reference in the AD.

We do not agree. We do not know how documents will be revised in the future. This AD, however, was revised to remove references to related service information, and therefore the comment no longer applies. We did not change the AD.

Request To Remove the Term ''Overhaul''

United Airlines and UPS requested that we remove the term ''overhaul,'' such as ''LPT overhaul'' and ''HPT overhaul'' from the proposed AD compliance, as the term ''overhaul'' is not industry standard and therefore subjective. The commenters suggested a few alternatives to use instead of the term ''overhaul.''

We partially agree. We do not agree that the term ''overhaul'' should be removed, but we do agree that it should be defined. We added a definition paragraph which states that, for the purpose of this AD, an overhaul is when all disks in the rotor are removed from the engine and the blades are removed.

Request To Clarify Approved Methods of Compliance

UPS requested that we clarify that the service information listed under Related Information are approved methods of compliance to the proposed AD. They further stated that, as-written, it is not clear that they are approved methods of compliance.

We agree that the AD should be clarified. We revised the AD by

removing references to related service information.

Request To Duplicate the Strip and Recoat Requirements

United Airlines requested that we duplicate the strip and recoat requirements and make them part of Inspection/Check-01 or Inspection/Check-03 of the PW4000 Engine Cleaning Inspection and Repair (CIR) Manual. The commenter stated that the strip and recoat limits are currently located in repair-14 of the PW4000 CIR Manual, but repair-14 is not always required to return a vane cluster to service. The commenter stated that the strip and recoat requirements need to be part of the normal inspection process.

We do not agree. The AD mandates that the inspection be performed once, at the next LPT overhaul. That inspection will purge the fleet of LPT 4th stage vanes that have had more than one strip and recoat repair. After that inspection, LPT 4th stage vanes are not allowed to have more than one strip and recoat repair, as specified in the installation prohibition paragraph (f). Revising the engine manuals to relocate the inspection requirements is unnecessary. We did not change the AD.

Request To Remove Reference to 4th Stage Vanes With an Unknown Number of Strip and Recoat Repairs

United Airlines stated that there is no way to identify vanes with an unknown number of strip and recoat repairs. The commenter stated that if there were no markings on the vane, it would indicate that no strip and recoat repairs were performed. This could lead to scrapping vanes that could otherwise be repaired and returned to service.

We agree. We changed the AD to eliminate the reference to LPT 4th stage vanes with an unknown number of strip and recoat repairs.

Request To Make the CIR Inspections More Specific

United Airlines requested that in proposed AD paragraph (e)(1)(iv) we make the CIR inspections more specific for the LPT case dimensions. The commenter stated that there are different ways to perform the measurements and it is not clear whether the dimension to measure is based on an average or an individual diametric dimension.

We do not agree. A specific measurement technique is not defined because multiple measurement techniques exist that are acceptable. The only diametric dimensional inspection required by the AD is index 24, which would be acceptable to measure based on an average dimension. We did not change the AD.

Request To Change ''Ensure Adequate Engagement''

United Airlines requested that in proposed AD paragraphs (e)(1)(iii) and (e)(1)(iv), we change ''ensure adequate engagement'' to ''dimensionally inspect the applicable LPT case slot serviceable dimensions and 3rd stage vane serviceable dimensions per the appropriate CIR.'' The commenter also requested that we list the specific dimensions to inspect by index number. The commenter stated that no mechanic can deduce what an adequate engagement is because it is not specific enough.

We agree. We changed paragraph (e)(1)(iii) to ''dimensionally examine index 13 through index 34 of the LPT 3rd stage vane cluster assembly.'' We also changed paragraph (e)(1)(iv) to ''dimensionally examine index 23 and index 24 of the vane engagement slots on the rear turbine case, where the 3rd stage vane is installed.'' We also listed the specific dimensions to inspect by index number, and included the supporting figures in this AD.

Request To Eliminate Paragraphs

United Airlines requested that we eliminate paragraphs (e)(1)(ii) through (e)(1)(iv) and (e)(2). The commenter stated that these paragraphs are related to procedures that are in the engine manual that operators are already performing. If they are left in the AD, they will add a significant burden in the amount of time and paperwork required to manage and verify compliance to the AD.

We do not agree. The actions in the paragraphs the commenter wants eliminated from the AD represent changes to the manuals that were specifically incorporated to address 3rd and 4th stage vane failures. Although air carriers operating under 14 Code of Federal Regulations (CFR) Part 121 are likely using the most current versions of the engine manuals, not all operators, for example, part 91 operators, may be required to incorporate the latest versions of the engine manuals. Therefore, we must maintain these requirements in the AD to ensure that all operators comply to resolve the unsafe condition. We did not change the AD.

Revision to Cost of Compliance

In reviewing the cost of compliance estimate made in the NPRM (77 FR 12755, March 2, 2012), we determined that we were unable to substantiate our prorated cost estimate for limiting the number of strip and recoat repairs since we do not know how many vanes are operating with more than one strip and recoat repair. We, therefore, removed the estimate of the useful part life expectancy and only included the replacement parts cost. The total cost estimate changed from $32,147,170 to $9,214,170.

Conclusion

We reviewed the relevant data, considered the comments received, and determined that air safety and the public interest require adopting the AD with the changes described previously. We have determined that these changes:

- Are consistent with the intent that was proposed in the NPRM (77 FR 12755, March 2, 2012) for correcting the unsafe condition; and
- Do not add any additional burden upon the public than was already proposed in the NPRM (77 FR 12755, March 2, 2012).

We also determined that these changes will not increase the economic burden on any operator or increase the scope of the AD.

Costs of Compliance

We estimate that this AD affects 807 engines installed on airplanes of U.S. registry. We estimate that it will take 2 work-hours per engine to perform the LPT 3rd stage vane cluster assembly and rear turbine case inspections. The average labor rate is $85 per work-hour. We expect that about 1,870 LPT 4th stage vane cluster assemblies will be found with the non-conforming casting identification. Replacement parts cost about $4,854. Based on these figures, we estimate the cost of the AD on U.S. operators to be $9,214,170.

Authority for This Rulemaking

Title 49 of the United States Code specifies the FAA's authority to issue rules on aviation safety. Subtitle I, section 106, describes the authority of the FAA Administrator. Subtitle VII: Aviation Programs, describes in more detail the scope of the Agency's authority.

We are issuing this rulemaking under the authority described in Subtitle VII, Part A, Subpart III, Section 44701: ''General requirements.'' Under that section, Congress charges the FAA with promoting safe flight of civil aircraft in air commerce by prescribing regulations for practices, methods, and procedures the Administrator finds necessary for safety in air commerce. This regulation is within the scope of that authority because it addresses an unsafe condition that is likely to exist or develop on

products identified in this rulemaking action.

Regulatory Findings

This AD will not have federalism implications under Executive Order 13132. This AD will not have a substantial direct effect on the States, on the relationship between the national government and the States, or on the distribution of power and responsibilities among the various levels of government.

For the reasons discussed above, I certify that this AD:

(1) Is not a ''significant regulatory action'' under Executive Order 12866,

(2) Is not a ''significant rule'' under DOT Regulatory Policies and Procedures (44 FR 11034, February 26, 1979),

(3) Will not affect intrastate aviation in Alaska, and

(4) Will not have a significant economic impact, positive or negative, on a substantial number of small entities under the criteria of the Regulatory Flexibility Act.

List of Subjects in 14 CFR Part 39

Air transportation, Aircraft, Aviation safety, Incorporation by reference, Safety.

Adoption of the Amendment

Accordingly, under the authority delegated to me by the Administrator, the FAA amends 14 CFR part 39 as follows:

PART 39—AIRWORTHINESS DIRECTIVES

■ 1. The authority citation for part 39 continues to read as follows:

Authority: 49 U.S.C. 106(g), 40113, 44701.

§ 39.13 [Amended]

■ 2. The FAA amends § 39.13 by adding the following new airworthiness directive (AD):

2012–14–09 Pratt & Whitney Division: Amendment 39–17123; Docket No. FAA–2012–0060; Directorate Identifier 2012–NE–02–AD.

(a) Effective Date

This AD is effective November 7, 2012.

(b) Affected ADs

None.

(c) Applicability

This AD applies to the following Pratt & Whitney Division turbofan engines:

(1) PW4000–94″ engine models PW4050, PW4052, PW4056, PW4152, PW4156, PW4650, PW4060, PW4060A, PW4060C, PW4062, PW4062A, PW4156A, PW4158, PW4160, PW4460, and PW4462 including models with any dash number suffix.

(2) PW4000–100″ engine models PW4164, PW4164C, PW4164C/B, PW4168, PW4168A, PW4164–1D, PW4164C–1D, PW4164C/B–1D, PW4168–1D, PW4168A–1D, and PW4170.

(d) Unsafe Condition

This AD was prompted by reports of 3rd and 4th stage vane fractures in the low-pressure turbine (LPT) of certain PW4000–94″ and PW4000–100″ turbofan engines. These fractures caused an uncontained engine failure and an LPT case puncture, and resulted in multiple in flight shutdowns. We are issuing this AD to prevent 3rd and 4th stage vane fractures in the LPT, damage to the LPT rotor, uncontained engine failure, and damage to the airplane.

(e) Compliance

Comply with this AD within the compliance times specified, unless already done.

(1) At the next LPT overhaul, do the following:

(i) Remove LPT 4th stage vanes that have a P/N listed in Table 1 to paragraph (e) of this AD from service if more than one strip and recoat repair has been performed.

TABLE 1 TO PARAGRAPH (e)—AFFECTED LPT 4TH STAGE VANE P/NS

50N174	50N674–01	51N174–001	51N374–001	52N574–01
50N474–01	50N774–01	51N174–002	51N674–01	52N674–01
50N474–001	50N774–001	51N174–003	52N274–01	51N774–01
50N574–01	51N174–01	51N374–01	52N474–01	52N774–01

(ii) Re-assemble the 3rd stage LPT rotor blades by alternating heavy blades next to light blades and balancing blades of similar weights 180 degrees across the rotor.

(iii) Dimensionally examine index 13 through index 34 of the LPT 3rd stage vane cluster assembly. Use Table 2 to paragraph (e) of this AD and Figure 1, Figure 2, and Figure 3 to paragraph (e) of this AD to determine whether the vane is eligible for installation.

TABLE 2 TO PARAGRAPH (e)—DETERMINATION OF VANE ELIGIBILITY

Inspect:	Eligible for installation limits:
13	1.820–1.830 inches (46.23–46.48 mm).
14	1.920–1.930 inches (48.77–49.02 mm).
15	3.200 inches (81.280 mm) Basic.
16	0.900 inch (22.860 mm) Basic.
17	0.365 inch (9.271 mm) Basic.
18	0.350 inch (8.890 mm) Basic.
19	0.160 inch (4.064 mm) Basic.
20	0.772 inch (19.609 mm) Basic.
21	72° Basic.
22	22.382 inch (568.503 mm) Radius—Origin on Plane S Basic.
23	21.052 inch (534.721 mm) Radius—Origin on Plane S, concentric with Index 8 Basic.
24	Angle from Plane S to Plane SL 3°4′37″ Basic.
25	Angle from Plane S to Plane SM 6°9′14″ Basic.
26	90° Basic for typical airfoil section.
27:	
Distance from rear foot outer diameter surface to airfoil section along Planes S, SL, and SM.	
For Section B–B:	5.241 inches (133.121 mm).

TABLE 2 TO PARAGRAPH (E)—DETERMINATION OF VANE ELIGIBILITY—Continued

Inspect:	Eligible for installation limits:
For Section E–E:	3.181 inches (80.797 mm).
For Section J–J:	1.935 inches (49.149 mm).
28:	
Airfoil chord at Section J–J (1.935 inches (49.149 mm) from rear foot outer diameter surface at Planes S, SL, and SM).	1.346 inches (34.188 mm) minimum.
At Section E–E (3.181 inches (80.797 mm) from rear foot outer diameter surface at Planes S, SL, and SM).	1.314 inches (33.376 mm) minimum.
At Section B–B (5.241 inches (133.121 mm) from rear foot outer diameter surface at Planes S, SL, and SM).	1.188 inches (30.175 mm) minimum.
29:	
Airfoil thickness at Section J–J (1.935 inches (49.149 mm) from rear foot outer diameter surface at Planes S, SL, and SM).	0.239 inch (6.071 mm) minimum.
At Section E–E (3.181 inches (80.797 mm) from rear foot outer diameter surface at Planes S, SL, and SM).	0.183 inch (4.648 mm) minimum.
At Section B–B (5.241 inches (133.121 mm) from rear foot outer diameter surface at Planes S, SL, and SM).	0.139 inch (3.531 mm) minimum.
30:	
Distance to trailing edge measurement	0.062 inch (1.575 mm).
31:	
Airfoil trailing edge thickness	0.030 inch (0.762 mm) minimum.
32:	
Dimension	0.315–0.324 inch (8.001–8.230 mm) diameter.
33:	
Dimension	6.785–6.795 inches (172.34–172.59 mm).
34:	
Dimension	0.692–0.714 inch (17.58–18.14 mm).

BILLING CODE 4910–13–P

Figure 1 to Paragraph (e) - Determination of Vane Eligibility

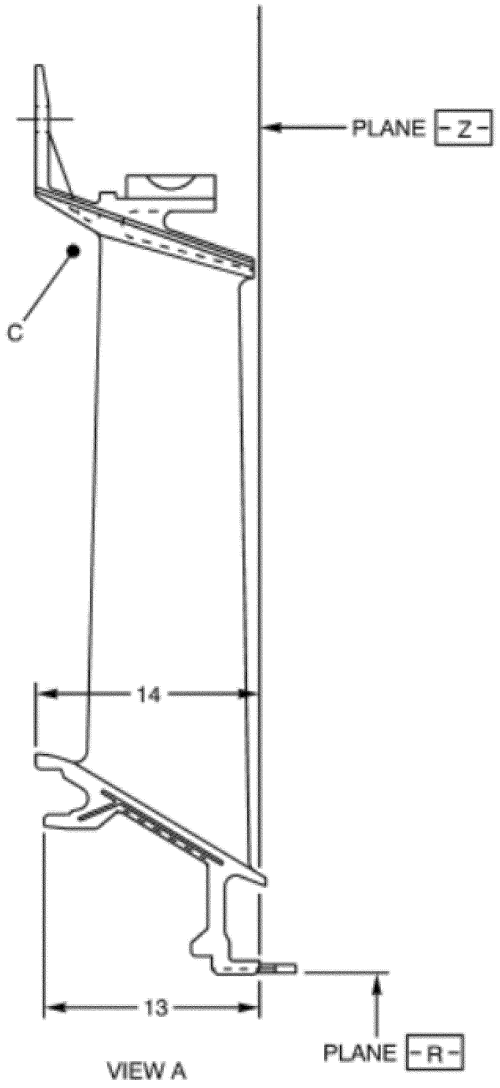

Figure 2 to Paragraph (e) - Determination of Vane Eligibility

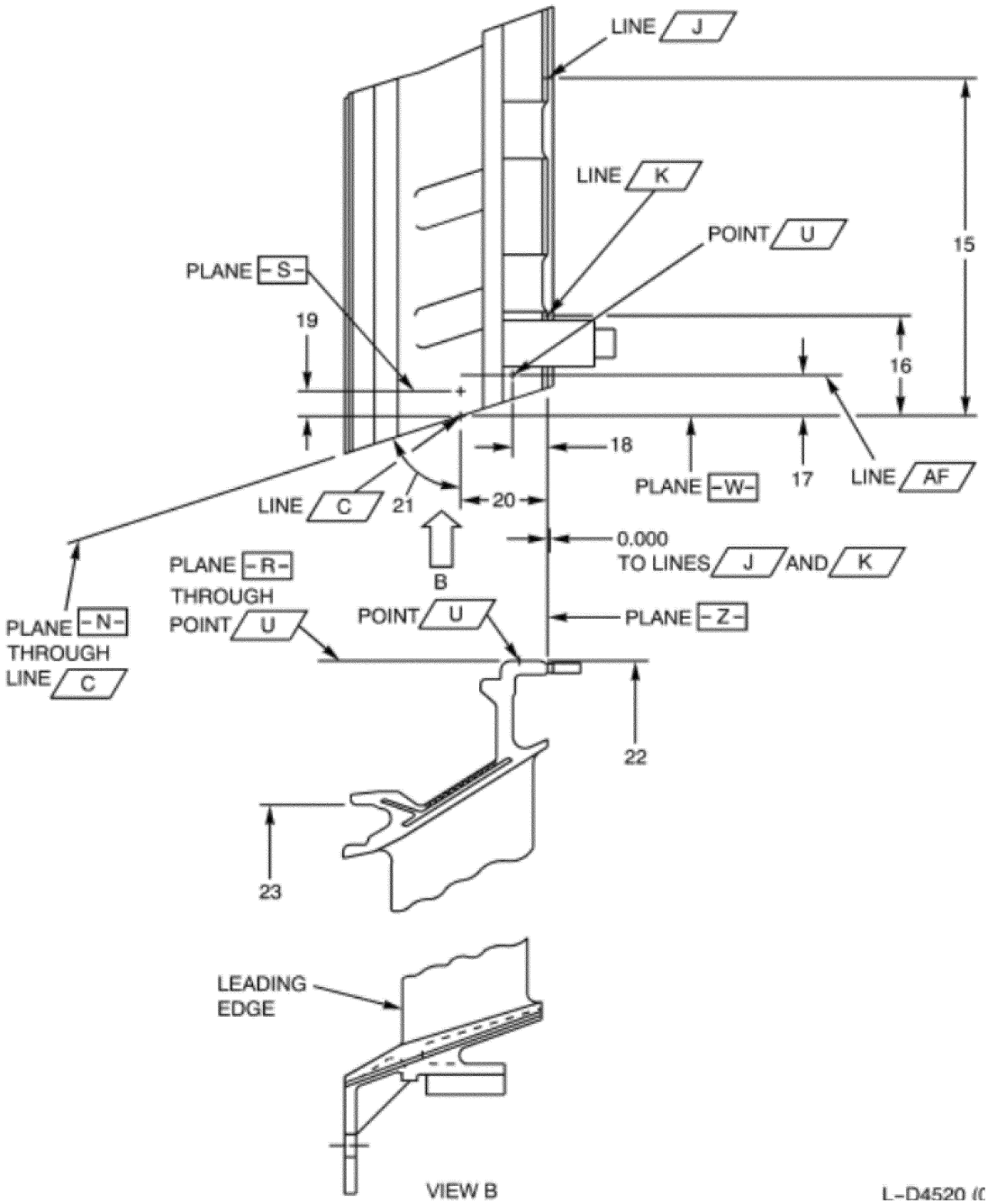

Figure 3 to Paragraph (e) - Determination of Vane Eligibility

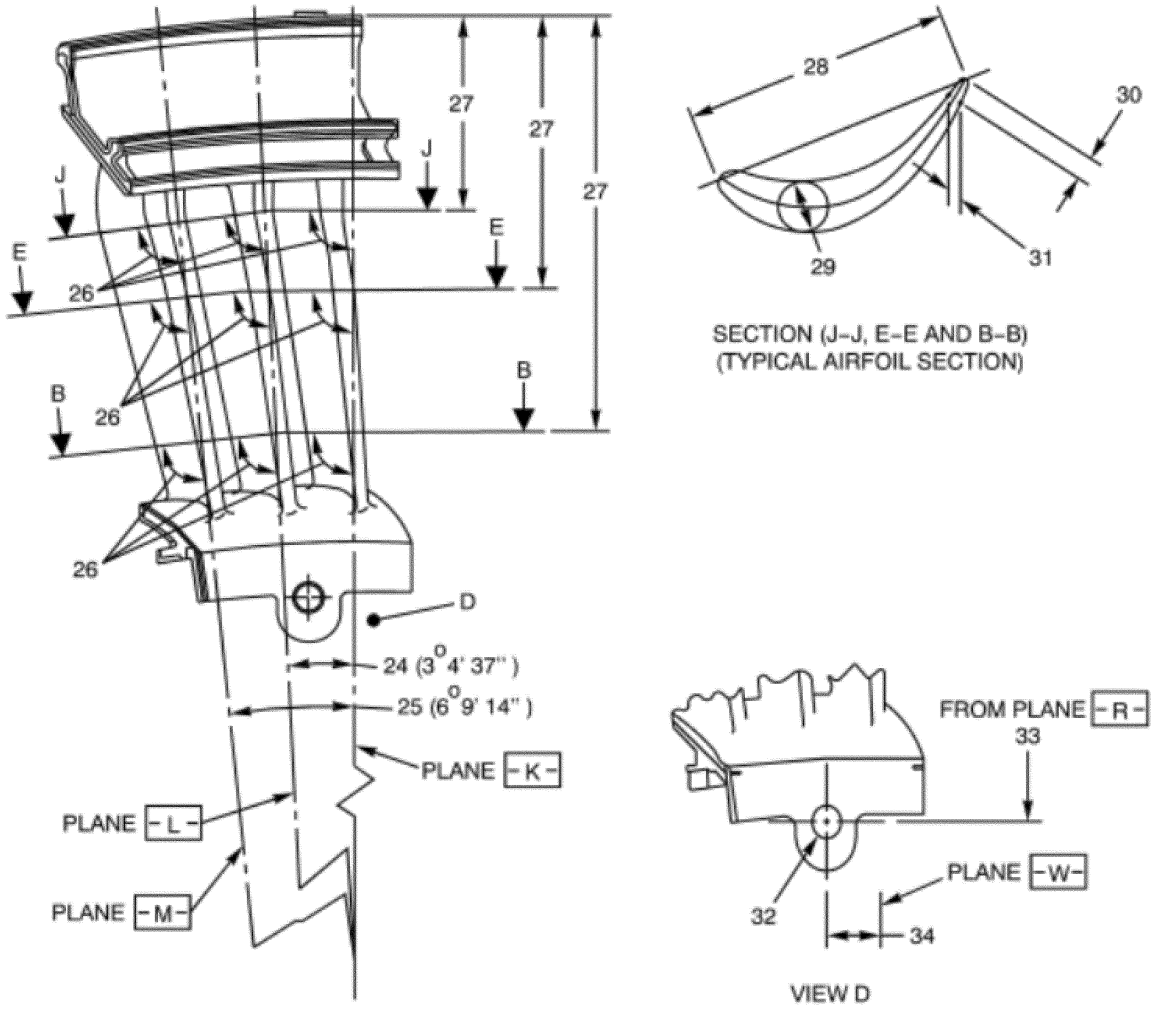

BILLING CODE 4910–13–C

(iv) Dimensionally examine index 23 and index 24 of the vane engagement slots on the rear turbine case, where the 3rd stage vane is installed. Use Table 3 to paragraph (e) of this AD and Figure 4 to paragraph (e) of this AD to determine whether the case is eligible for installation.

TABLE 3 TO PARAGRAPH (e)—DETERMINATION OF CASE ELIGIBILITY

Inspect:	Eligible for installation limits:
23	1.875 inch (47.625 mm) minimum.

TABLE 3 TO PARAGRAPH (e)—DETERMINATION OF CASE ELIGIBILITY—Continued

Inspect:	Eligible for installation limits:
24	0.097 inch (2.464 mm) minimum.

Figure 4 to Paragraph (e) - Determination of Case Eligibility

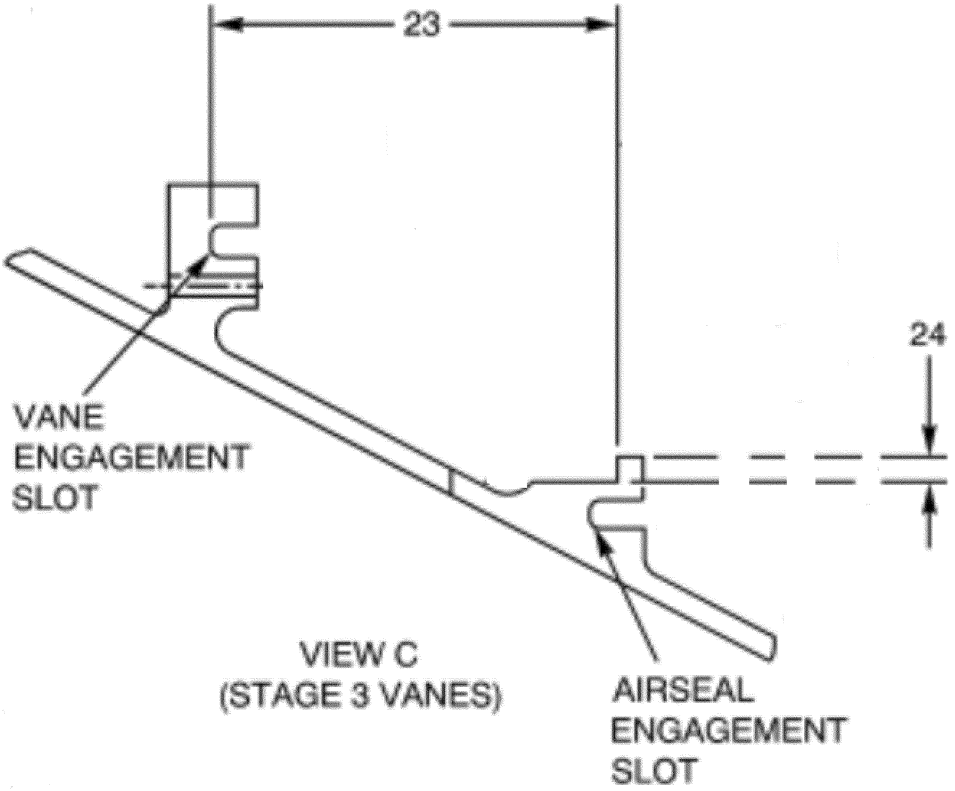

(v) Inspect the 44 LPT 4th stage vane cluster assemblies P/N 52N774–01 for casting identification ''51N554AT 1447 2S1C1'' and P/N 52N674–01 for casting identification ''51N454AT 655 2S1C1.'' Remove the vane cluster assembly from service if either of these casting identifications is found.

(2) At the next high-pressure turbine (HPT) overhaul, re-assemble the 2nd stage HPT rotor blades by alternating heavy blades next to light blades and balancing blades of similar weights 180 degrees across the rotor.

(f) Installation Prohibition

After the effective date of this AD, do not install or reinstall into any engine any LPT 4th stage vanes with a P/N listed in Table 1 to paragraph (e) of this AD that are at piece-part exposure and have had more than one strip and recoat repair.

(g) Definitions

(1) For the purpose of this AD, an HPT or LPT overhaul occurs when all disks in the rotor are removed from the engine and the blades are removed.

(2) For the purpose of this AD, piece-part exposure means that the part is removed from the engine and completely disassembled.

(h) Alternative Methods of Compliance (AMOCs)

The Manager, Engine Certification Office, FAA, may approve AMOCs for this AD. Use the procedures found in 14 CFR 39.19 to make your request.

(i) Related Information

For more information about this AD, contact James Gray, Aerospace Engineer, Engine Certification Office, FAA, Engine & Propeller Directorate, 12 New England Executive Park, Burlington, MA; phone: 781–238–7742; fax: 781–238–7199; email: *james.e.gray@faa.gov*.

(j) Material Incorporated by Reference

None.

Issued in Burlington, Massachusetts, on September 20, 2012.

Diane M. Cook,

Acting Manager, Engine & Propeller Directorate, Aircraft Certification Service.

[FR Doc. 2012–23791 Filed 10–2–12; 8:45 am]

BILLING CODE 4910–13–P

DEPARTMENT OF TRANSPORTATION

Federal Aviation Administration

14 CFR Part 39

[Docket No. FAA–2011–1411; Directorate Identifier 2011–NM–074–AD; Amendment 39–17206; AD 2012–19–11]

RIN 2120–AA64

Airworthiness Directives; The Boeing Company Airplanes

AGENCY: Federal Aviation Administration (FAA), DOT.

ACTION: Final rule.

SUMMARY: We are adopting a new airworthiness directive (AD) for certain The Boeing Company Model 737 airplanes. This AD was prompted by a report of a flightcrew not receiving an aural warning during a lack of cabin pressurization event. This AD requires incorporating design changes to improve the reliability of the cabin altitude warning system by installing a redundant cabin altitude pressure switch, replacing the aural warning module (AWM) with a new or reworked AWM, and changing certain wire bundles or connecting certain previously capped and stowed wires as

necessary. For certain airplanes, this AD also requires prior or concurrent incorporation of related design changes by modifying the instrument panels, installing light assemblies, modifying the wire bundles, and installing a new circuit breaker, as necessary. We are issuing this AD to prevent the loss of cabin altitude warning, which could delay flightcrew recognition of a lack of cabin pressurization, and could result in incapacitation of the flightcrew due to hypoxia (a lack of oxygen in the body), and consequent loss of control of the airplane.

DATES: This AD is effective November 7, 2012.

The Director of the Federal Register approved the incorporation by reference of certain publications listed in the AD as of November 7, 2012.

ADDRESSES: For service information identified in this AD, contact Boeing Commercial Airplanes, Attention: Data & Services Management, P.O. Box 3707, MC 2H–65, Seattle, Washington 98124–2207; telephone 206–544–5000, extension 1; fax 206–766–5680; Internet *https://www.myboeingfleet.com.* You may review copies of the referenced service information at the FAA, Transport Airplane Directorate, 1601 Lind Avenue SW., Renton, Washington. For information on the availability of this material at the FAA, call 425–227–1221.

Examining the AD Docket

You may examine the AD docket on the Internet at *http://www.regulations.gov;* or in person at the Docket Management Facility between 9 a.m. and 5 p.m., Monday through Friday, except Federal holidays. The AD docket contains this AD, the regulatory evaluation, any comments received, and other information. The address for the Docket Office (phone: 800–647–5527) is Document Management Facility, U.S. Department of Transportation, Docket Operations, M–30, West Building Ground Floor, Room W12–140, 1200 New Jersey Avenue SE., Washington, DC 20590.

FOR FURTHER INFORMATION CONTACT: Francis Smith, Aerospace Engineer, Cabin Safety and Environmental Systems Branch, ANM–150S, FAA, Seattle Aircraft Certification Office, 1601 Lind Avenue SW., Renton, Washington 98057–3356; phone: (425) 917–6596; fax: (425) 917–6590; email: *Francis.Smith@faa.gov.*

SUPPLEMENTARY INFORMATION:

Discussion

We issued a notice of proposed rulemaking (NPRM) to amend 14 CFR part 39 to include an AD that would apply to the specified products. That NPRM published in the **Federal Register** on December 30, 2011 (76 FR 82207). That NPRM proposed to require incorporating design changes to improve the reliability of the cabin altitude warning system by requiring installation of a redundant switch of the cabin altitude pressure, replacing the AWM with a new or reworked AWM, changing certain wire bundles, and connecting certain previously capped and stowed wires, as necessary. For certain airplanes, that NPRM also proposed to require modifying the instrument panels, installing light assemblies, modifying the wire bundles, and installing a new circuit breaker, as necessary.

Comments

We gave the public the opportunity to participate in developing this AD. The following presents the comments received on the proposal (76 FR 82207, December 30, 2011) and the FAA's response to each comment.

Support for NPRM (76 FR 82207, December 30, 2011)

Air Line Pilot's Association International supported the intent and the language of the NPRM (76 FR 82207, December 30, 2011). Europe Airpost stated it has no objection to the NPRM as proposed for Model 737–700 airplanes. American Airlines (AAL) stated it has no objections to the NPRM as proposed and finds the proposed compliance time to be acceptable.

Request To Use the Latest Service Information

Delta (DAL), AAL, and The Boeing Company requested that the proposed AD (76 FR 82207, December 30, 2011) incorporate ''Boeing Special Attention Service Bulletin 737–21–1165, Revision 2, dated April 30, 2012,'' instead of Boeing Special Attention Service Bulletin 737–21–1165, Revision 1, dated July 16, 2010. Boeing stated that Boeing Special Attention Service Bulletin 737–21–1165, Revision 2, dated April 30, 2012, incorporates changes to fix errors in the airplane maintenance manual, connection pin contacts, one splice, and one wire that had been discovered by an operator attempting to incorporate the service information. Boeing stated that if Boeing Special Attention Service Bulletin 737–21–1165, Revision 1, dated July 16, 2010, is required, the operators affected by the errors in that service bulletin will require alternative methods of compliance (AMOCs) in order to comply with the proposed AD.

In addition, Boeing and US Airways requested that the proposed AD (76 FR 82207, December 30, 2011) incorporate Boeing Special Attention Service Bulletin 737–21–1164, Revision 1, dated May 17, 2012. Boeing stated that this revised service information incorporates changes from an engineering validation that affects all identified airplane groups and revises the engineering for airplanes with cold-bonded skins. Boeing stated that Boeing Special Attention Service Bulletin 737–21–1164, dated February 10, 2011, cannot be incorporated as written due to erroneous installation steps for the pressure switch location and erroneous operational test instructions. US Airways noted that errors with conflicting steps in Boeing Special Attention Service Bulletin 737–21–1164, dated February 10, 2011, involve circuit breaker operation.

We agree with the commenters' requests to reference the latest service information for the reasons provided by the commenters. We have revised this AD by referencing Boeing Special Attention Service Bulletin 737–21–1164, Revision 1, dated May 17, 2012; and Boeing Special Attention Service Bulletin 737–21–1165, Revision 1, dated July 16, 2010, as revised by Boeing Special Attention Service Bulletin 737–21–1165, Revision 2, dated April 30, 2012; throughout the AD. We have also given credit for actions done before the effective date of this AD in accordance with Boeing Special Attention Service Bulletin 737–21–1165, Revision 1, dated July 16, 2010.

Request To Clarify or Delete Service Information

Boeing requested that we either delete or clarify references in the preamble and paragraph (i) (''Credit for Actions Accomplished in Accordance with Previous Service Information'') of the NPRM (76 FR 82207, December 30, 2011) to Boeing Alert Service Bulletin 737–31A1325, dated January 11, 2010, and Boeing Alert Service Bulletin 737–31A1332, Revision 2, dated August 18, 2011; as well as the supporting BAE Systems service information. Boeing stated a concern that the references to all of this service information will cause confusion regarding the concurrent requirements and compliance times.

Boeing also stated that AD 2011–03–14, Amendment 39–16598 (76 FR 6529, February 7, 2011), already mandates incorporation of Boeing Alert Service Bulletin 737–31A1325, dated January 11, 2010, and also establishes the compliance time. Boeing added that another existing NPRM, Docket No. FAA–2011–0258 (76 FR 16579, March 24, 2011), proposes to mandate Boeing

Alert Service Bulletin 737–31A1332, Revision 1, dated June 24, 2010, and it also establishes the compliance times.

Boeing stated its concern that the proposed AD (76 FR 82207, December 30, 2011) might inadvertently require operators to incorporate Boeing Special Attention Service Bulletin 737–21–1164, Revision 1, dated May 17, 2012; and Boeing Alert Service Bulletin 737–31A1325, dated January 11, 2010; at the same time—instead of in the correct order.

We agree with Boeing's request to clarify or delete certain service information in this final rule to avoid confusion.

Notes 1 and 2 of the NPRM (76 FR 82207, December 30, 2011) referenced the supporting BAE Systems service information; therefore, we have removed those notes from this final rule to avoid confusion.

It should be noted that since the issuance of the NPRM (76 FR 82207, December 30, 2011), we have reviewed Boeing Alert Service Bulletin 737–31A1332, Revision 3, dated March 28, 2012, which clarifies certain actions and figures. We have revised paragraph (h) of this AD to reference this latest revision of the service information.

We have also revised paragraph (i) of the NPRM (76 FR 82207, December 30, 2011), which gave credit for Boeing Alert Service Bulletin 737–31A1332, Revision 1, dated June 24, 2010. Paragraph (i)(1) of this final rule provides credit for Boeing Special Attention Service Bulletin 737–21–1165, Revision 1, dated July 16, 2010. We have added paragraph (i)(2) to this final rule to give credit for Boeing Alert Service Bulletin 737–31A1332, Revision 1, dated June 24, 2010; however, such credit only applies to Group 1 airplanes identified in that service information, except for Groups 24, 25, and 27 through 33 airplanes (as identified in Boeing Alert Service Bulletin 737–31A1332, Revision 3, dated March 28, 2012). Paragraphs (i)(3) and (i)(4) of this final rule to provide credit for Boeing Alert Service Bulletin 737–31A1332, Revision 2, dated August 18, 2011, but only for the airplanes identified in those paragraphs.

We provide the following clarifications for references in this final rule to Boeing Alert Service Bulletin 737–31A1325, dated January 11, 2010; and Boeing Alert Service Bulletin 737–31A1332, Revision 2, dated August 18, 2011; as applicable.

If an operator decides to comply with the actions in Boeing Special Attention Service Bulletin 737–21–1164, Revision 1, dated May 17, 2012; and Boeing Special Attention Service Bulletin 737–21–1165, Revision 1, dated July 16, 2010, as revised by Boeing Special Attention Service Bulletin 737–21–1165, Revision 2, dated April 30, 2012; within the 72-month compliance time specified in this AD, then prior to or concurrently with those actions, the operator also must accomplish the concurrent requirements in Boeing Alert Service Bulletin 737–31A1325, dated January 11, 2010, or Boeing Alert Service Bulletin 737–31A1332, Revision 3, dated March 28, 2012, as applicable.

However, we note that AD 2011–03–14, Amendment 39–16598 (76 FR 6529, February 7, 2011), requires accomplishment of Boeing Alert Service Bulletin 737–31A1325, dated January 11, 2010, within 36 months after the effective date of that AD. In addition, NPRM Docket No. FAA–2011–0258 (76 FR 16579, March 24, 2011) also specifies 36 months as the compliance time for accomplishment of Boeing Alert Service Bulletin 737–31A1332, Revision 1, dated June 24, 2010. Therefore, if an operator waits until the end of the 72-month compliance time specified in paragraph (g) this AD to accomplish the concurrent service information specified in this AD—i.e., Boeing Alert Service Bulletin 737–31A1325, dated January 11, 2010; and Boeing Alert Service Bulletin 737–31A1332, Revision 3, dated March 28, 2012—then that operator would be out of compliance with the other AD actions. Therefore, the order of these AD actions is acceptable.

Request To Revise Unsafe Condition

Boeing requested that paragraph (e) of the NPRM (76 FR 82207, December 30, 2011) be revised. Boeing suggested that the paragraph state: ''This AD was prompted by the report of a flight crew not receiving an aural warning during a lack of cabin pressurization event. The failure of the altitude pressure switch prevented the aural warning from sounding when the cabin altitude exceeded 10,000 feet. We are issuing this AD to improve reliability of the Cabin Altitude Warning to flight crews. Loss of the Cabin Altitude Warning may delay flight crew recognition of a lack of cabin pressurization, which could result in incapacitation of the flightcrew due to hypoxia (a lack of oxygen in the body), and consequent loss of control of the airplane.''

Boeing stated that the pressure switch at issue is only used in the cabin altitude warning system and is not used for pressurization control. Boeing stated that the increased reliability of the cabin altitude warning may prevent delays in the flightcrew's recognition of a lack of cabin pressure event, but will not affect the flightcrew's ability to recognize the warning intent or properly react because the method of annunciation and associated flightcrew procedures are unchanged. Boeing stated that AD 2011–03–14, Amendment 39–16598 (76 FR 6529, February 7, 2011), and NPRM Docket No. FAA–2011–0258 (76 FR 16579, March 24, 2011) address the failure of a flightcrew to recognize and react to a valid cabin altitude warning.

We agree with Boeing's request. We agree that the requested revision clarifies that failure of the pressure switch was not the root cause of the lack of cabin pressurization, but was the root cause of the failure of the aural warning. We have changed the Summary and paragraph (e) of this final rule accordingly, with certain editorial changes.

Request To Match Compliance Times of Two AD Actions

United Airlines (UAL) requested that the effective date of the final rule after the NPRM (76 FR 82207, December 30, 2011) match the effective date of the final rule after NPRM for Docket No. FAA–2011–0258 (76 FR 16579, March 24, 2011). UAL pointed out that Boeing Special Attention Service Bulletin 737–21–1165, Revision 2, dated April 30, 2012; and Boeing Alert Service Bulletin 737–31A1332, Revision 2, dated August 18, 2011; have been issued. UAL stated that the effective date of this final rule will require installation of the redundant pressure switch (which was proposed in the NPRM (76 FR 82207, December 30, 2011)), and should not precede the effective date of the final rule for NPRM Docket No. FAA–2011–0258, which currently proposes to require the installation of annunciators. UAL stated that matching the compliance times for the two final rules will allow operators to obtain parts and schedule the two modifications concurrently, which is much more effective than doing the two tasks at separate times, since the work is required in the same areas for both modifications.

We disagree with the commenter's request to harmonize the compliance times. While we note that the safety issues identified in this final rule and NPRM Docket No. FAA–2011–0258 (76 FR 16579, March 24, 2011) are related, each AD action addresses separate safety issues and has specific compliance times based on our risk assessments. Operators can always comply with an AD in advance of the compliance time. We have not changed this AD in this regard.

Request To Revise the Costs of Compliance Section

Boeing requested clarification of incorporation costs reflected in the NPRM as those costs relate to Boeing Alert Service Bulletin 737–31A1325, dated January 11, 2010; Boeing Alert Service Bulletin 737–31A1332, Revision 2, dated August 18, 2011; and the supporting BAE service information.

DAL requested that the work-hours for Boeing Alert Service Bulletin 737–31A1332, Revision 2, dated August 18, 2011, to modify instrument panels, install light assemblies, modify wire bundles, and install a new circuit breaker, be changed from 84 to approximately 95. DAL stated that it has noted a discrepancy in the work-hours for the actions specified in the service information, excluding time estimates for opening and closing.

AAL requested that we revise the estimated work-hours for accomplishing the actions in the NPRM (76 FR 82207, December 30, 2011). AAL suggested that the work-hours specified in Boeing Special Attention Service Bulletin 737–21–1165, Revision 1, dated July 16, 2010, be revised from 31 to approximately 95 work-hours for accomplishing the installation of the redundant cabin altitude pressure switch, removal and installation of the AWM, and wiring changes. AAL stated that it has validated its estimates through implementation on several airplanes. DAL requested the work-hours for the same action be adjusted to approximately 53.

UAL requested that the combined work-hours for both actions (we infer to this as installation and modification) be changed from 115 to 200 work-hours. UAL stated that it has done surveys of airplanes to determine how to gain access to affected areas, and it has determined what additional testing will be required due to disturbed systems.

Europe Airpost, DAL, US Airways, and UAL requested that we revise the cost of parts in the NPRM (76 FR 82207, December 30, 2011). Europe Airpost specifically stated that an additional cost should be included for operators needing to procure a new AWM ($36,456 based on the Boeing service information), which is not negligible for small airlines. UAL stated that the price estimates specified in the service information and the NPRM only include wire kit costs and do not include the costs for modifying or replacing parts. US Airways indicated that the cost for reworking the AWM would be $4,136, and the cost for replacement of the AWM would be $33,576 (each).

We agree with the commenters' request to revise the work-hours and the cost of parts in this AD. We have revised the cost for the installation, replacement, and wiring changes to include the 54 work-hours in Boeing Special Attention Service Bulletin 737–21–1165, Revision 1, dated July 16, 2010, as revised by Boeing Special Attention Service Bulletin 737–21–1165, Revision 2, dated April 30, 2012, and the 8 hours in the concurrent BAE service information, a total of up to 62 work-hours. We have revised the cost of parts of the AWM to specify $33,576. For the modification and other installations, we have included the 8 work-hours in the concurrent BAE service information, a total of up to 92 work-hours. We have revised the ''Cost of Compliance'' section of this AD accordingly.

Request To Reopen the Comment Period for a Related NPRM (76 FR 16579, March 24, 2011)

UAL requested that we revise and re-open the comment period for a related NPRM, Docket No. FAA–2011–0258 (76 FR 16579, March 24, 2011). UAL stated that the related NPRM is only applicable to airplanes in Groups 1 through 7 of Boeing Alert Service Bulletin 737–31A1332, Revision 1, dated June 24, 2010. UAL stated that it does not have any airplanes within these groups and, therefore, did not comment on that related NPRM. However, UAL stated that in paragraph (h) of the NPRM (76 FR 82207, December 30, 2011), the concurrent requirements identified in Boeing Alert Service Bulletin 737–31A1332, Revision 2, dated August 18, 2011, now include 23 groups of airplanes. UAL stated that operators that have airplanes in groups 1 through 7 likely did not comment on the related NPRM, and should be given the opportunity to do so.

We are considering additional AD rulemaking at this time for the related NPRM, Docket No. FAA–2011–0258 (76 FR 16579, March 24, 2011), which will re-open the comment period.

Request for Editorial Changes

Boeing requested that we make editorial changes to the NPRM (76 FR 82207, December 30, 2011). Boeing suggested we delete the comma after ''certain wire bundles,'' and add the word ''or'' so that the first sentence in paragraph (g) of the NPRM would read as follows: ''Within 72 months after the effective date of this AD, install a redundant switch of the cabin altitude pressure, replace the aural warning module (AWM) with a new or reworked AWM, and change certain wire bundles or connect certain capped and stowed wires, as applicable * * *.'' Boeing noted that certain airplanes require the replacement of the AWM and connection of the capped and stowed wires, as specified in Boeing Special Attention Service Bulletin 737–21–1165, Revision 2, dated April 30, 2012.

We agree with the commenter's request for editorial changes for the reason provided by the commenter. We have changed the Summary and paragraph (g) of this final rule accordingly.

Revised AMOC Paragraph

We have added paragraph (j)(3) to this final rule to delegate the authority to approve an AMOC for any repair required by this AD to the Boeing Commercial Airplanes Organization Designation Authorization (ODA).

Conclusion

We reviewed the relevant data, considered the comments received, and determined that air safety and the public interest require adopting the AD with the changes described previously—and minor editorial changes. We have determined that these minor changes:

- Are consistent with the intent that was proposed in the (NPRM (76 FR 82207, December 30, 2011) for correcting the unsafe condition; and
- Do not add any additional burden upon the public than was already proposed in the NPRM (76 FR 82207, December 30, 2011).

We also determined that these changes will not increase the economic burden on any operator or increase the scope of the AD.

Costs of Compliance

We estimate that this AD affects 1,405 airplanes of U.S. registry.

We estimate the following costs to comply with this AD:

ESTIMATED COSTS

Action	Labor cost	Parts cost	Cost per product	Cost on U.S. operators
Install a redundant cabin altitude pressure switch, replace the AWM with a new or reworked AWM, change certain wire bundles or connect certain capped and stowed wires.	Up to 62 work-hours × $85 per hour = up to $5,270.	$33,576	Up to $38,846	Up to $54,578,630.
Modify the instrument panels, install light assemblies, modify the wire bundles, and install a new circuit breaker (concurrent requirements).	Up to 92 work-hours × $85 per hour = up to $7,820.	5,292	Up to $13,112	Up to $18,422,360.

Authority for This Rulemaking

Title 49 of the United States Code specifies the FAA's authority to issue rules on aviation safety. Subtitle I, section 106, describes the authority of the FAA Administrator. Subtitle VII: Aviation Programs, describes in more detail the scope of the Agency's authority.

We are issuing this rulemaking under the authority described in Subtitle VII, Part A, Subpart III, Section 44701: ''General requirements.'' Under that section, Congress charges the FAA with promoting safe flight of civil aircraft in air commerce by prescribing regulations for practices, methods, and procedures the Administrator finds necessary for safety in air commerce. This regulation is within the scope of that authority because it addresses an unsafe condition that is likely to exist or develop on products identified in this rulemaking action.

Regulatory Findings

This AD will not have federalism implications under Executive Order 13132. This AD will not have a substantial direct effect on the States, on the relationship between the national government and the States, or on the distribution of power and responsibilities among the various levels of government.

For the reasons discussed above, I certify that this AD:

(1) Is not a ''significant regulatory action'' under Executive Order 12866,

(2) Is not a ''significant rule'' under DOT Regulatory Policies and Procedures (44 FR 11034, February 26, 1979),

(3) Will not affect intrastate aviation in Alaska, and

(4) Will not have a significant economic impact, positive or negative, on a substantial number of small entities under the criteria of the Regulatory Flexibility Act.

List of Subjects in 14 CFR Part 39

Air transportation, Aircraft, Aviation safety, Incorporation by reference, Safety.

Adoption of the Amendment

Accordingly, under the authority delegated to me by the Administrator, the FAA amends 14 CFR part 39 as follows:

PART 39—AIRWORTHINESS DIRECTIVES

■ 1. The authority citation for part 39 continues to read as follows:

Authority: 49 U.S.C. 106(g), 40113, 44701.

§ 39.13 [Amended]

■ 2. The FAA amends § 39.13 by adding the following new airworthiness directive (AD):

2012–19–11 The Boeing Company: Amendment 39–17206; Docket No. FAA–2011–1411; Directorate Identifier 2011–NM–074–AD.

(a) Effective Date

This AD is effective November 7, 2012.

(b) Affected ADs

None.

(c) Applicability

The Boeing Company airplanes; certificated in any category; as identified in paragraphs (c)(1) and (c)(2) of this AD.

(1) Model 737–100, –200, –200C, –300,–400, and –500 series airplanes, as identified in Boeing Special Attention Service Bulletin 737–21–1164, Revision 1, dated May 17, 2012.

(2) Model 737–600, –700, –700C, –800,–900, and –900ER series airplanes, as identified in Boeing Special Attention Service Bulletin 737–21–1165, Revision 1, dated July 16, 2010, as revised by Boeing Special Attention Service Bulletin 737–21–1165, Revision 2, dated April 30, 2012.

(d) Subject

Joint Aircraft System Component (JASC)/Air Transport Association (ATA) of America Code 21; Air Conditioning.

(e) Unsafe Condition

This AD was prompted by the report of a flightcrew not receiving an aural warning during a lack of cabin pressurization event. The failure of the altitude pressure switch prevented the aural warning from sounding when the cabin altitude exceeded 10,000 feet. We are issuing this AD to prevent the loss of cabin altitude warning, which could delay flightcrew recognition of a lack of cabin pressurization, and could result in incapacitation of the flightcrew due to hypoxia (a lack of oxygen in the body), and consequent loss of control of the airplane.

(f) Compliance

Comply with this AD within the compliance times specified, unless already done.

(g) Installation

Within 72 months after the effective date of this AD, install a redundant cabin altitude pressure switch, replace the aural warning module (AWM) with a new or reworked AWM, and change certain wire bundles or connect certain capped and stowed wires, as applicable, in accordance with the Accomplishment Instructions of Boeing Special Attention Service Bulletin 737–21–1164, Revision 1, dated May 17, 2012 (for Model 737–100, –200, –200C, –300, –400, and –500 series airplanes); or Boeing Special Attention Service Bulletin 737–21–1165, Revision 1, dated July 16, 2010, as revised by Boeing Special Attention Service Bulletin 737–21–1165, Revision 2, dated April 30, 2012 (for Model 737–600, –700, –700C, –800, –900, and –900ER series airplanes).

(h) Concurrent Actions

For airplanes identified in Boeing Alert Service Bulletin 737–31A1325, dated January 11, 2010 (for Model 737–100, –200, –200C, –300, –400, and –500 series airplanes); and Boeing Alert Service Bulletin 737–31A1332, Revision 3, dated March 28, 2012 (for Model 737–600, –700, –700C, –800, –900, and –900ER series airplanes): Before or concurrently with accomplishment of the actions specified in paragraph (g) of this AD, as applicable, modify the instrument panels, install light assemblies, modify the wire bundles, and install a new circuit breaker, in accordance with the Accomplishment Instructions of Boeing Alert Service Bulletin 737–31A1325, dated January 11, 2010 (for Model 737–100, –200, –200C, –300, –400, and –500 series airplanes); or Boeing Alert Service Bulletin 737–31A1332, Revision 3, dated March 28, 2012 (for Model 737–600, –700, –700C, –800, –900, and –900ER series airplanes).

(i) Credit for Previous Actions

(1) This paragraph provides credit for the actions required by paragraph (h) of this AD, if those actions were performed before the effective date of this AD using Boeing Special Attention Service Bulletin 737–21–1165, Revision 1, dated July 16, 2010.

(2) For Group 1 airplanes identified in Boeing Alert Service Bulletin 737–31A1332, Revision 1, dated June 24, 2010; except Groups 24, 25, and 27 through 33 airplanes identified in Boeing Alert Service Bulletin 737–31A1332, Revision 3, dated March 28, 2012: This paragraph provides credit for the corresponding actions required by paragraph (h) of this AD, if those actions were performed before the effective date of this AD, using Boeing Alert Service Bulletin 737–31A1332, Revision 1, dated June 24, 2010, which is not incorporated by reference.

(3) For airplanes identified in Boeing Alert Service Bulletin 737–31A1332, Revision 2, dated August 18, 2011; except airplanes identified in paragraph (i)(4) of this AD, and Groups 24, 25, and 27 through 33 airplanes identified in Boeing Alert Service Bulletin 737–31A1332, Revision 3, dated March 28, 2012: This paragraph provides credit for the corresponding actions required by paragraph (h) of this AD, if those actions were performed before the effective date of this AD using Boeing Alert Service Bulletin 737–31A1332, Revision 2, dated August 18, 2011.

(4) For Group 21, Configuration 2 airplanes identified in Boeing Alert Service Bulletin 737–31A1332, Revision 3, dated March 28, 2012: This paragraph provides credit for the corresponding actions required by paragraph (h) of this AD, if those actions were performed before the effective date of this AD using Boeing Alert Service Bulletin 737–31A1332, Revision 2, dated August 18, 2011; and provided that those actions in Boeing Service Bulletin 737–21–1171, dated February 12, 2009, were accomplished prior to or concurrently with the actions in Boeing Alert Service Bulletin 737–31A1332, Revision 2, dated August 18, 2011.

(j) Alternative Methods of Compliance (AMOCs)

(1) The Manager, Seattle Aircraft Certification Office (ACO), FAA, has the authority to approve AMOCs for this AD, if requested using the procedures found in 14 CFR 39.19. In accordance with 14 CFR 39.19, send your request to your principal inspector or local Flight Standards District Office, as appropriate. If sending information directly to the manager of the Seattle ACO, send it to the attention of the person identified in the Related Information section of this AD. Information may be emailed to: *9-ANM-Seattle-ACO-AMOC-Requests@faa.gov.*

(2) Before using any approved AMOC, notify your appropriate principal inspector, or lacking a principal inspector, the manager of the local flight standards district office/certificate holding district office.

(3) An AMOC that provides an acceptable level of safety may be used for any repair required by this AD if it is approved by the Boeing Commercial Airplanes Organization Designation Authorization (ODA) that has been authorized by the Manager, Seattle ACO, to make those findings. For a repair method to be approved, the repair must meet the certification basis of the airplane, and the approval must specifically refer to this AD.

(k) Related Information

For more information about this AD, contact Francis Smith, Aerospace Engineer, Cabin Safety and Environmental Systems Branch, ANM–150S, FAA, Seattle Aircraft Certification Office, 1601 Lind Avenue SW., Renton, Washington 98057–3356; phone: (425) 917–6596; fax: (425) 917–6590; email: *Francis.Smith@faa.gov.*

(l) Material Incorporated by Reference

(1) The Director of the **Federal Register** approved the incorporation by reference (IBR) of the service information listed in this paragraph under 5 U.S.C. 552(a) and 1 CFR part 51.

(2) You must use this service information as applicable to do the actions required by this AD, unless the AD specifies otherwise.

(i) Boeing Special Attention Service Bulletin 737–21–1164, Revision 1, dated May 17, 2012.

(ii) Boeing Special Attention Service Bulletin 737–21–1165, Revision 1, dated July 16, 2010.

(iii) Boeing Special Attention Service Bulletin 737–21–1165, Revision 2, dated April 30, 2012.

(iv) Boeing Alert Service Bulletin 737–31A1325, dated January 11, 2010.

(v) Boeing Alert Service Bulletin 737–31A1332, Revision 1, dated June 24, 2010.

(vi) Boeing Alert Service Bulletin 737–31A1332, Revision 2, dated August 18, 2011.

(vii) Boeing Alert Service Bulletin 737–31A1332, Revision 3, dated March 28, 2012.

(3) For The Boeing Company service information identified in this AD, contact Boeing Commercial Airplanes, Attention: Data & Services Management, P.O. Box 3707, MC 2H–65, Seattle, Washington 98124–2207; telephone 206–544–5000, extension 1; fax 206–766–5680; Internet *https://www.myboeingfleet.com.*

(4) You may review copies of the service information at the FAA, Transport Airplane Directorate, 1601 Lind Avenue SW., Renton, WA. For information on the availability of this material at the FAA, call 425–227–1221.

(5) You may also review copies of the service information that is incorporated by reference at the National Archives and Records Administration (NARA). For information on the availability of this material at an NARA facility, call 202–741–6030, or go to *http://www.archives.gov/federal_register/code_of_federal_regulations/ibr_locations.html.*

Issued in Renton, Washington, on September 19, 2012.

Ali Bahrami,

Manager, Transport Airplane Directorate, Aircraft Certification Service.

[FR Doc. 2012–23800 Filed 10–2–12; 8:45 am]

BILLING CODE 4910–13–P

DEPARTMENT OF HEALTH AND HUMAN SERVICES

Food and Drug Administration

21 CFR Parts 510, 522, 524, and 558

[Docket No. FDA–2012–N–0002]

New Animal Drugs; Butorphanol; Doxapram; Triamcinolone; Tylosin

AGENCY: Food and Drug Administration, HHS.

ACTION: Final rule.

SUMMARY: The Food and Drug Administration (FDA) is amending the animal drug regulations to reflect the withdrawal approval of a new animal drug application (NADA) and three abbreviated new animal drug applications (ANADAs) at the sponsors' request because the products are no longer manufactured or marketed.

DATES: This rule is effective October 15, 2012.

FOR FURTHER INFORMATION CONTACT: David Alterman, Center for Veterinary Medicine (HFV–212), Food and Drug Administration, 7519 Standish Pl., Rockville, MD 20855, 240–453–6843, email: *david.alterman@fda.hhs.gov.*

SUPPLEMENTARY INFORMATION: The sponsors of the NADA and ANADAs listed in table 1 have requested that FDA withdraw approval because the products are no longer manufactured or marketed:

TABLE 1—NADA AND ANADAS FOR WHICH WITHDRAWAL OF APPROVAL HAS BEEN REQUESTED

NADA/ ANADA No.	Trade name (drug)	Applicant	Citation in 21 CFR
100–556	Vigorena Feeds Hy-Ty Premix (tylosin phosphate).	Springfield Milling Corp., Vigorena Feeds, Springfield, MN 56087	558.625
200–435	RESPIRAM (doxapram hydrochloride) Injection.	Modern Veterinary Therapeutics, LLC, 18001 Old Cutler Rd., suite 317, Miami, FL 33157.	522.775
200–446	BUTORPHINE (butorphanol tartrate) Injection.	Modern Veterinary Therapeutics, LLC, 18001 Old Cutler Rd., suite 317, Miami, FL 33157.	522.246
200–459	VETAZINE (triamcinolone) Cream	Modern Veterinary Therapeutics, LLC, 18001 Old Cutler Rd., suite 317, Miami, FL 33157.	524.2483

Elsewhere in this issue of the **Federal Register**, FDA gave notice that approval of NADA 100–556 and ANADAs 200–435, 200–446, and 200–459, and all supplements and amendments thereto, is withdrawn, effective October 15, 2012. As provided in the regulatory text of this document, the animal drug regulations are amended to reflect these voluntary withdrawals of approval.

Following these withdrawals of approval, Modern Veterinary Therapeutics, LLC, and Springfield Milling Corp. will no longer be the sponsor of an approved application. Accordingly, 21 CFR 510.600(c) is being amended to remove the entries for these firms.

This rule does not meet the definition of ''rule'' in 5 U.S.C. 804(3)(A) because it is a rule of ''particular applicability.'' Therefore, it is not subject to the congressional review requirements in 5 U.S.C. 801–808.

List of Subjects

21 CFR Part 510

Administrative practice and procedure, Animal drugs, Labeling, Reporting and recordkeeping requirements.

21 CFR Parts 522 and 524

Animal drugs.

21 CFR Parts 558

Animal drugs, Animal feeds.

Therefore, under the Federal Food, Drug, and Cosmetic Act and under the authority delegated to the Commissioner of Food and Drugs and redelegated to the Center for Veterinary Medicine, 21 CFR parts 510, 522, 524, and 558 are amended as follows:

PART 510—NEW ANIMAL DRUGS

■ 1. The authority citation for 21 CFR part 510 continues to read as follows:

Authority: 21 U.S.C. 321, 331, 351, 352, 353, 360b, 371, 379e.

§ 510.600 [Amended]

■ 2. In § 510.600, in the table in paragraph (c)(1), remove the entries for ''Modern Veterinary Therapeutics, LLC'' and ''Springfield Milling Corp.''; and in the table in paragraph (c)(2), remove the entries for ''015914'' and ''035955''.

PART 522—IMPLANTATION OR INJECTABLE DOSAGE FORM NEW ANIMAL DRUGS

■ 3. The authority citation for 21 CFR part 522 continues to read as follows:

Authority: 21 U.S.C. 360b.

§ 522.246 [Amended]

■ 4. In § 522.246, in paragraph (b)(2), remove ''Nos. 015914 and 059130'' and in its place add ''No. 059130''.

§ 522.775 [Amended]

■ 5. In § 522.775, in paragraph (b), remove ''Nos. 000010 and 015914'' and in its place add ''No. 000010''.

PART 524—OPHTHALMIC AND TOPICAL DOSAGE FORM NEW ANIMAL DRUGS

■ 6. The authority citation for 21 CFR part 524 continues to read as follows:

Authority: 21 U.S.C. 360b.

§ 524.2483 [Amended]

■ 7. In § 524.2483, in paragraph (b), remove ''015914,''.

PART 558—NEW ANIMAL DRUGS FOR USE IN ANIMAL FEEDS

■ 8. The authority citation for 21 CFR part 558 continues to read as follows:

Authority: 21 U.S.C. 360b, 371.

§ 558.625 [Amended]

■ 9. In § 558.625, remove and reserve paragraph (b)(40).

Dated: September 27, 2012.

Bernadette Dunham,

Director, Center for Veterinary Medicine.

[FR Doc. 2012–24331 Filed 10–2–12; 8:45 am]

BILLING CODE P

DEPARTMENT OF HOMELAND SECURITY

Coast Guard

33 CFR Part 100

[Docket Number USCG–2012–0728]

RIN 1625–AA08

Special Local Regulations; Red Bull Flugtag Miami, Biscayne Bay; Miami, FL

AGENCY: Coast Guard, DHS.

ACTION: Temporary final rule.

SUMMARY: The Coast Guard is establishing a special local regulation on the waters of Biscayne Bay, east of Bayfront Park, in Miami, Florida during the Red Bull Flugtag. The Red Bull Flugtag is scheduled to take place on Saturday, November 3, 2012. The event consists of 30 participants launching self-propelled flying machines from a 30ft ramp to the water below. 150 spectator vessels are expected to attend the event. The special local regulation is necessary to provide for the safety of the participants, participant vessels, and general public on the navigable waters of the United States during the event. The special local regulation will encompass the following two areas: An event area, where non-participant vessels are prohibited from entering, transiting through, anchoring in, or remaining within; and a spectator area, where all vessels are permitted to anchor.

DATES: This rule is effective and will be enforced from 11 a.m. to 4 p.m. on November 3, 2012.

ADDRESSES: Documents mentioned in this preamble are part of docket [USCG–2012–0728]. To view documents mentioned in this preamble as being available in the docket, go to *http://www.regulations.gov,* type the docket number in the ''SEARCH'' box and click ''SEARCH.'' Click on Open Docket Folder on the line associated with this rulemaking. You may also visit the Docket Management Facility in Room W12–140 on the ground floor of the Department of Transportation West Building, 1200 New Jersey Avenue SE., Washington, DC 20590, between 9 a.m. and 5 p.m., Monday through Friday, except Federal holidays.

FOR FURTHER INFORMATION CONTACT: If you have questions on this rule, call or email Lieutenant Mike H. Wu, Sector Miami Prevention Department, Coast Guard; telephone 305–535–7576, email *Mike.H.Wu@uscg.mil.* If you have questions on viewing or submitting material to the docket, call Renee V. Wright, Program Manager, Docket Operations, telephone (202) 366–9826.

SUPPLEMENTARY INFORMATION:

Table of Acronyms

DHS Department of Homeland Security
FR **Federal Register**
NPRM Notice of Proposed Rulemaking

A. Regulatory History and Information

The Coast Guard is issuing this final rule without prior notice and opportunity to comment pursuant to authority under section 4(a) of the Administrative Procedure Act (APA) (5 U.S.C. 553(b)). This provision authorizes an agency to issue a rule without prior notice and opportunity to comment when the agency for good cause finds that those procedures are ''impracticable, unnecessary, or contrary to the public interest.'' Under 5 U.S.C. 553(b)(B), the Coast Guard finds that good cause exists for not publishing a notice of proposed rulemaking (NPRM) with respect to this rule because the Coast Guard did not receive all event details until September 5, 2012. As a

result, the Coast Guard did not have sufficient time to publish an NPRM and to receive public comments prior to the event. Any delay in the effective date of this rule would be contrary to the public interest because immediate action is needed to minimize potential danger to the participants, participant vessels, spectators, and the general public.

B. Basis and Purpose

The legal basis for the rule is the Coast Guard's authority to establish special local regulations: 33 U.S.C. 1233. The purpose of the rule is to provide for the safety of life on navigable waters of the United States during the Red Bull Flugtag.

C. Discussion of the Final Rule

On November 3, 2012, Red Bull North America is sponsoring the Red Bull Flugtag. The event will be held on the waters of Biscayne Bay, Miami, Florida. The event consists of 30 participants launching self-propelled flying machines from a 30ft ramp to the water below. 150 spectator vessels are expected to attend the event.

The special local regulation will encompass certain waters of Biscayne Bay, Miami, Florida. The special local regulation will be enforced from 11 a.m. until 4 p.m. on November 3, 2012. The special local regulation will encompass the following two areas: (1) An event area, where non-participant vessels are prohibited from entering, transiting through, anchoring in, or remaining within; and (2) a spectator area, where vessels are permitted to anchor. Non-participant persons and vessels may request authorization to enter, transit through, anchor in, or remain within the event area by contacting the Captain of the Port Miami via telephone at 305–535–4472, or a designated representative via VHF radio on channel 16. If authorization to enter, transit through, anchor in, or remain within the event area is granted by the Captain of the Port Miami or a designated representative, all persons and vessels receiving such authorization must comply with the instructions of the Captain of the Port Miami or a designated representative. The Coast Guard will provide notice of the special local regulations by Local Notice to Mariners, Broadcast Notice to Mariners, and on-scene designated representatives.

D. Regulatory Analyses

We developed this rule after considering numerous statutes and executive orders related to rulemaking. Below we summarize our analyses based on these statutes and executive orders.

1. Regulatory Planning and Review

This rule is not a significant regulatory action under section 3(f) of Executive Order 12866, Regulatory Planning and Review, as supplemented by Executive Order 13563, Improving Regulation and Regulatory Review, and does not require an assessment of potential costs and benefits under section 6(a)(3) of Executive Order 12866 or under section 1 of Executive Order 13563. The Office of Management and Budget has not reviewed it under those Orders.

The economic impact of this rule is not significant for the following reasons: (1) The special local regulation will be enforced for only five hours; (2) although non-participant persons and vessels will not be able to enter, transit through, anchor in, or remain within the event area without authorization from the Captain of the Port Miami or a designated representative, they may operate in the surrounding area during the enforcement period; (3) non-participant persons and vessels may still enter, transit through, anchor in, or remain within the event area during the enforcement period if authorized by the Captain of the Port Miami or a designated representative; and (4) the Coast Guard will provide advance notification of the special local regulations to the local maritime community by Local Notice to Mariners and Broadcast Notice to Mariners.

2. Impact on Small Entities

The Regulatory Flexibility Act of 1980 (RFA), 5 U.S.C. 601–612, as amended, requires federal agencies to consider the potential impact of regulations on small entities during rulemaking. The term ''small entities'' comprises small businesses, not-for-profit organizations that are independently owned and operated and are not dominant in their fields, and governmental jurisdictions with populations of less than 50,000. The Coast Guard certifies under 5 U.S.C. 605(b) that this rule will not have a significant economic impact on a substantial number of small entities. This rule would affect the following entities, some of which might be small entities: the owners or operators of vessels intending to transit or anchor in a portion of Biscayne Bay from 11 a.m. to 4 p.m. on November 3, 2012.

3. Assistance for Small Entities

Under section 213(a) of the Small Business Regulatory Enforcement Fairness Act of 1996 (Pub. L. 104–121), we want to assist small entities in understanding this rule. If the rule would affect your small business, organization, or governmental jurisdiction and you have questions concerning its provisions or options for compliance, please contact the person listed in the **FOR FURTHER INFORMATION CONTACT**, above.

Small businesses may send comments on the actions of Federal employees who enforce, or otherwise determine compliance with, Federal regulations to the Small Business and Agriculture Regulatory Enforcement Ombudsman and the Regional Small Business Regulatory Fairness Boards. The Ombudsman evaluates these actions annually and rates each agency's responsiveness to small business. If you wish to comment on actions by employees of the Coast Guard, call 1–888–REG–FAIR (1–888–734–3247). The Coast Guard will not retaliate against small entities that question or complain about this rule or any policy or action of the Coast Guard.

4. Collection of Information

This rule will not call for a new collection of information under the Paperwork Reduction Act of 1995 (44 U.S.C. 3501–3520).

5. Federalism

A rule has implications for federalism under Executive Order 13132, Federalism, if it has a substantial direct effect on the States, on the relationship between the national government and the States, or on the distribution of power and responsibilities among the various levels of government. We have analyzed this rule under that Order and determined that this rule does not have implications for federalism.

6. Protest Activities

The Coast Guard respects the First Amendment rights of protesters. Protesters are asked to contact the person listed in the **FOR FURTHER INFORMATION CONTACT** section to coordinate protest activities so that your message can be received without jeopardizing the safety or security of people, places or vessels.

7. Unfunded Mandates Reform Act

The Unfunded Mandates Reform Act of 1995 (2 U.S.C. 1531–1538) requires Federal agencies to assess the effects of their discretionary regulatory actions. In particular, the Act addresses actions that may result in the expenditure by a State, local, or tribal government, in the aggregate, or by the private sector of $100,000,000 (adjusted for inflation) or more in any one year. Though this rule will not result in such an expenditure,

we do discuss the effects of this rule elsewhere in this preamble.

8. Taking of Private Property

This rule will not cause a taking of private property or otherwise have taking implications under Executive Order 12630, Governmental Actions and Interference with Constitutionally Protected Property Rights.

9. Civil Justice Reform

This rule meets applicable standards in sections 3(a) and 3(b)(2) of Executive Order 12988, Civil Justice Reform, to minimize litigation, eliminate ambiguity, and reduce burden.

10. Protection of Children

We have analyzed this rule under Executive Order 13045, Protection of Children from Environmental Health Risks and Safety Risks. This rule is not an economically significant rule and does not create an environmental risk to health or risk to safety that may disproportionately affect children.

11. Indian Tribal Governments

This rule does not have tribal implications under Executive Order 13175, Consultation and Coordination with Indian Tribal Governments, because it does not have a substantial direct effect on one or more Indian tribes, on the relationship between the Federal Government and Indian tribes, or on the distribution of power and responsibilities between the Federal Government and Indian tribes.

12. Energy Effects

This action is not a ''significant energy action'' under Executive Order 13211, Actions Concerning Regulations That Significantly Affect Energy Supply, Distribution, or Use.

13. Technical Standards

This rule does not use technical standards. Therefore, we did not consider the use of voluntary consensus standards.

14. Environment

We have analyzed this rule under Department of Homeland Security Management Directive 023–01 and Commandant Instruction M16475.lD, which guide the Coast Guard in complying with the National Environmental Policy Act of 1969 (NEPA) (42 U.S.C. 4321–4370f), and have determined that this action is one of a category of actions that do not individually or cumulatively have a significant effect on the human environment. This rule involves a special local regulation issued in conjunction with a regatta or marine parade. This rule is categorically excluded from further review under paragraph 35(b) and 34(h) of Figure 2–1 of the Commandant Instruction. An environmental analysis checklist supporting this determination and a Categorical Exclusion Determination are available in the docket where indicated under **ADDRESSES**. We seek any comments or information that may lead to the discovery of a significant environmental impact from this rule.

List of Subjects in 33 CFR Part 100

Marine safety, Navigation (water), Reporting and recordkeeping requirements, Waterways.

For the reasons discussed in the preamble, the Coast Guard amends 33 CFR part 100 as follows:

PART 100—SAFETY OF LIFE ON NAVIGABLE WATERS

■ 1. The authority citation for part 100 continues to read as follows:

Authority: 33 U.S.C. 1233.

■ 2. Add a temporary § 100.35T07–0728 to read as follows:

§ 100.35T07–0728 Special Local Regulation; Red Bull Flugtag, Biscayne Bay; Miami, FL.

(a) *Regulated Area.* The following regulated areas are established as special local regulation. All coordinates are North American Datum 1983.

(1) *Event Area.* All waters of Biscayne Bay, Miami, FL between Bayfront Park and the Intercontinental-Miami Hotel encompassed within an imaginary line connecting the following points: Starting at point 1 in position 25°46′32″ N, 80°11′06″ W; thence southeast to point 2 in position 25°46′30″ N, 80°11′04″ W; thence south to point 3 in position 25°46′26″ N, 80°11′04″ W; thence southwest to point 4 in position 25°46′25″ N, 80°11′06″ W; thence north back to origin. All non-participant persons and vessels are prohibited from entering, transiting through, anchoring in, or remaining within the event area without authorization from the Captain of the Port Miami or a designated representative.

(2) *Spectator Area.* All waters of Biscayne Bay, Miami, FL between Bayfront Park and the Intercontinental-Miami Hotel encompassed within an imaginary line connecting the following points: Starting at point 1 in position 25°46′32″ N, 80°11′05″ W; thence northeast to point 2 in position 25°46′36″ N, 80°11′01″ W; thence south to point 3 in position 25°46′22″ N, 80°11′01″ W; thence southwest to point 4 in position 25°46′18″ N, 80°11′04″ W; thence west to point 5 in position 25°46′18″ N, 80°11′05″ W; thence north to point 6 in position 25°46′25″ N, 80°11′06″ W; thence northeast to point 7 in position 25°46′26″ N, 80°11′04″ W; thence northwest to point 8 in position 25°46′30″ N, 80°11′04″ W; thence northwest back to origin. Vessels are permitted to anchor in this area.

(b) *Definition.* The term ''designated representative'' means Coast Guard Patrol Commanders, including Coast Guard coxswains, petty officers, and other officers operating Coast Guard vessels, and Federal, state, and local officers designated by or assisting the Captain of the Port Miami in the enforcement of the regulated areas.

(c) *Regulations.* (1) Persons and vessels may request authorization to enter, transit through, anchor in, or remain within the event area by contacting the Captain of the Port Miami by telephone at 305–535–4472, or a designated representative via VHF radio on channel 16. If authorization is granted by the Captain of the Port Miami or a designated representative, all persons and vessels receiving such authorization must comply with the instructions of the Captain of the Port Miami or a designated representative.

(2) The Coast Guard will provide notice of the regulated areas by Local Notice to Mariners, Broadcast Notice to Mariners, and on-scene designated representatives.

(d) *Enforcement Date.* This rule will be enforced from 11:00 a.m. until 4:00 p.m. on November 3, 2012.

Dated: September 19, 2012.

C.P. Scraba,

Captain, U.S. Coast Guard, Captain of the Port Miami.

[FR Doc. 2012–24343 Filed 10–2–12; 8:45 am]

BILLING CODE 9110–04–P

DEPARTMENT OF VETERANS AFFAIRS

38 CFR Part 9

RIN 2900–AN40

Servicemembers' Group Life Insurance and Veterans' Group Life Insurance—Slayer's Rule Exclusion

AGENCY: Department of Veterans Affairs.

ACTION: Final rule.

SUMMARY: The Department of Veterans Affairs (VA) is amending its regulations governing Servicemembers' Group Life Insurance (SGLI) and Veterans' Group Life Insurance (VGLI) to prohibit payment of insurance proceeds payable

because of the death of a person whose life was insured under SGLI or VGLI (decedent) or payment of a SGLI Traumatic Injury Protection (TSGLI) benefit to a person who is convicted of intentionally and wrongfully killing the decedent or determined in a civil proceeding to have intentionally and wrongfully killed the decedent (slayer) and to any family member of the slayer. These provisions apply also to any person who assisted the slayer in causing the death of the decedent. Additionally, this document contains an interim final amendment that defines the term ''member of the family'' not to include a ''domestic partner.''

DATES: *Effective Date:* This final rule is effective November 2, 2012.

Applicability Date: This rule is applicable to any claim for SGLI or VGLI proceeds, including a claim for a payment under 38 CFR 9.20, Traumatic injury protection, filed on or after November 2, 2012, and to any such claim filed before that date that has not been paid or denied as of that date.

Comment Date: Comments on the omission of the term ''domestic partner'' from the definition of a ''member of the family'' must be submitted by December 3, 2012.

ADDRESSES: Written comments may be submitted through *www.Regulations.gov*; by mail or hand-delivery to Director, Regulations Management (02REG), Department of Veterans Affairs, 810 Vermont Avenue NW., Room 1068, Washington, DC 20420; or by fax to (202) 273–9026. Comments should indicate that they are submitted in response to ''RIN 2900–AN40—Servicemembers' Group Life Insurance and Veterans' Group Life Insurance—Slayer's Rule Exclusion.'' Copies of comments received will be available for public inspection in the Office of Regulation Policy and Management, Room 1063B, between the hours of 8:00 a.m. and 4:30 p.m., Monday through Friday (except holidays). Please call (202) 461–4902 for an appointment. (This is not a toll-free number.) In addition, during the comment period, comments may be viewed online through the Federal Docket Management System (FDMS) at *www.Regulations.gov*.

FOR FURTHER INFORMATION CONTACT: Monica Keitt, Attorney/Advisor, Department of Veterans Affairs Regional Office and Insurance Center (310/290B), 5000 Wissahickon Avenue, P.O. Box 8079, Philadelphia, PA 19101, (215) 842–2000, ext. 2905. (This is not a toll-free number.)

SUPPLEMENTARY INFORMATION: On December 13, 2011, VA published in the **Federal Register** (76 FR 77455) a proposed rule to amend VA regulations governing the payment of SGLI or VGLI proceeds and benefit payments under the TSGLI program. Specifically, VA proposed to amend 38 CFR 9.1 and 9.5 to prohibit payment of SGLI or VGLI proceeds or a TSGLI benefit to: (1) A person who is convicted of intentionally killing the decedent or determined in a civil proceeding to have intentionally killed the decedent (known hereafter as the ''slayer''); (2) a member of the slayer's family who is not related to the decedent by blood, legal adoption, or marriage; and (3) a member of the slayer's family who is related to the decedent by blood, legal adoption, or marriage and is convicted of a crime involving the intentional killing of the decedent or determined in a civil proceeding to have been involved in the intentional killing of the decedent.

Interested persons were invited to submit written comments on or before February 13, 2012. We received one comment, from Vietnam Veterans of America (VVA) concerning the terms used in, and the complexity of some of the language of, the proposed regulation. Based on internal agency reconsideration of the proposed regulation and the comment received from VVA, VA is making the following changes to the proposed rule.

First, VVA recommended adding the words ''and wrongfully'' and ''and wrongful'' as part of the descriptions provided in proposed § 9.5(e)(2)(i) and (iii), respectively. VA agrees with VVA's recommendation to include the words ''and wrongfully'' in § 9.5(e)(2)(i) because those words speak to the heinous aspect of the slayer's act that violates public policy. In order to be consistent, we will also add ''and wrongfully'' to § 9.1(l). In addition, this language is consistent with the language used in 38 CFR 3.11, which prohibits the payment of certain VA benefits to ''[a]ny person who has intentionally and wrongfully caused the death of another person'' if the benefits would be payable by reason of that death. The language of 38 CFR 3.11 serves as an appropriate model for the SGLI and VGLI Slayer's Rule Exclusion. However, VA did not incorporate the words ''and wrongful'' into proposed § 9.5(e)(2)(iii) because that provision has been completely revised in accordance with VVA's second recommendation to prohibit payment of insurance benefits to the family members of either the slayer or anyone who aided or assisted the slayer in causing the death of the decedent.

Second, VVA recommended simplifying the language of proposed § 9.5(e)(2) to make the regulation easier to understand as it relates to the persons who are prohibited from receiving insurance proceeds and benefits. VA agrees with VVA's suggestion and has modified the language of § 9.5(e)(2) to clarify the intent of the proposed rule that the slayer, anyone who assists the slayer in causing the death of the decedent, and the family members of the slayer or anyone who assists the slayer be prohibited from receiving insurance proceeds or benefits payable because of the decedent's death. Although proposed § 9.5(e)(2) included anyone who is convicted or found civilly liable for the death of the decedent, which would imply inclusion of an accomplice, the modified rule language removes any ambiguity regarding the inclusion of an accomplice under § 9.5(e)(2).

Third, VVA suggested changing the term ''surviving spouse'' in proposed § 9.5(e)(4)(i)(B) with the term ''widow or widower'' to make the reference consistent with the terms used in Chapter 19 of title 38, United States Code (U.S.C.). VA agrees with this suggestion and has altered the regulatory text accordingly. Use of the term ''widow or widower'' is consistent with the language of 38 U.S.C. 1970(a), which provides the order of preference for payments of SGLI and VGLI proceeds.

Finally, based on internal agency review, VA is removing proposed § 9.1(l)(6), which included ''[d]omestic partner'' as a ''member of the family'' for purposes of the provisions in § 9.5(e)(2), due to the unsettled legal landscape surrounding the recognition of such partnerships. Because recognition of the legality of such relationships varies from state to state, VA has determined that including such partnerships in this part would cause an undue administrative burden. The public is invited to comment on the omission of the term ''domestic partner'' from the definition of a ''member of the family.''

For the reasons discussed above, VA is adopting the proposed rule as a final rule with the above-noted changes.

Administrative Procedure Act

Regarding the interim final amendment that defines the term ''member of the family'' within this final rule at 38 CFR 9.1(l) not to include a ''domestic partner,'' we find, pursuant to 5 U.S.C. 553(b)(B), that there is good cause to dispense with advance public notice. As noted above, the legal landscape surrounding the recognition of such partnerships is unsettled. Therefore, at this time, the term's inclusion in the definition of a ''member of the family'' would be impracticable

and contrary to the public interest. Accordingly, VA is issuing this final rule with an interim final amendment to omit the term ''domestic partner'' from § 9.1(l).

Unfunded Mandates

The Unfunded Mandates Reform Act of 1995 requires, at 2 U.S.C. 1532, that agencies prepare an assessment of anticipated costs and benefits before issuing any rule that may result in an expenditure by State, local, and tribal governments, in the aggregate, or by the private sector, of $100 million or more (adjusted annually for inflation) in any year. This final rule will have no such effect on State, local, and tribal governments or on the private sector.

Paperwork Reduction Act

This final rule contains no provisions constituting a collection of information under the Paperwork Reduction Act (44 U.S.C. 3501–3521).

Executive Orders 12866 and 13563

Executive Orders 12866 and 13563 direct agencies to assess the costs and benefits of available regulatory alternatives and, when regulation is necessary, to select regulatory approaches that maximize net benefits (including potential economic, environmental, public health and safety effects, and other advantages; distributive impacts; and equity). Executive Order 13563 (Improving Regulation and Regulatory Review) emphasizes the importance of quantifying both costs and benefits, reducing costs, harmonizing rules, and promoting flexibility. Executive Order 12866 (Regulatory Planning and Review) defines a ''significant regulatory action,'' which requires review by the Office of Management and Budget (OMB), as ''any regulatory action that is likely to result in a rule that may: (1) Have an annual effect on the economy of $100 million or more or adversely affect in a material way the economy, a sector of the economy, productivity, competition, jobs, the environment, public health or safety, or State, local, or tribal governments or communities; (2) Create a serious inconsistency or otherwise interfere with an action taken or planned by another agency; (3) Materially alter the budgetary impact of entitlements, grants, user fees, or loan programs or the rights and obligations of recipients thereof; or (4) Raise novel legal or policy issues arising out of legal mandates, the President's priorities, or the principles set forth in this Executive Order.''

The economic, interagency, budgetary, legal, and policy implications of this regulatory action have been examined, and it has been determined not to be a significant regulatory action under Executive Order 12866.

Regulatory Flexibility Act

The Secretary of Veterans Affairs hereby certifies that this final rule will not have a significant economic impact on a substantial number of small entities as they are defined in the Regulatory Flexibility Act, 5 U.S.C. 601–612. This final rule will directly affect only individuals and will not directly affect any small entities. Therefore, pursuant to 5 U.S.C. 605(b), this final rule is exempt from the initial and final regulatory flexibility analysis requirements of sections 603 and 604.

Catalog of Federal Domestic Assistance Number and Title

The Catalog of Federal Domestic Assistance number and title for the program affected by this document is 64.103, Life Insurance for Veterans.

Signing Authority

The Secretary of Veterans Affairs, or designee, approved this document and authorized the undersigned to sign and submit the document to the Office of the Federal Register for publication electronically as an official document of the Department of Veterans Affairs. John R. Gingrich, Chief of Staff, Department of Veterans Affairs, approved this document on September 28, 2012, for publication.

List of Subjects in 38 CFR Part 9

Life insurance, Military personnel, Veterans.

Dated: September 28, 2012.

Robert C. McFetridge,

Director of Regulation Policy and Management, Office of the General Counsel, Department of Veterans Affairs.

For the reasons stated in the preamble, VA amends 38 CFR part 9 as set forth below:

PART 9—SERVICEMEMBERS' GROUP LIFE INSURANCE AND VETERANS' GROUP LIFE INSURANCE

■ 1. The authority citation for part 9 continues to read as follows:

Authority: 38 U.S.C. 501, 1965–1980A, unless otherwise noted.

■ 2. Amend § 9.1 by adding a new paragraph (l) to read as follows:

§ 9.1 Definitions.

* * * * *

(l) The term *member of the family* as used in § 9.5(e)(2) means an individual with any of the following relationships to a person who is convicted of intentionally and wrongfully killing the decedent or determined in a civil proceeding to have intentionally and wrongfully killed the decedent:

(1) Spouse;

(2) Biological, adopted, or step child;

(3) Biological, adoptive, or step parent;

(4) Biological, adopted, or step sibling; or

(5) Biological, adoptive, or step grandparent or grandchild.

* * * * *

■ 3. Amend § 9.5 by adding paragraph (e) to read as follows:

§ 9.5 Payment of proceeds.

* * * * *

(e)(1) The proceeds payable because of the death of an individual insured under Servicemembers' Group Life Insurance or Veterans' Group Life Insurance (''decedent'') shall not be payable to any person described in paragraph (e)(2) of this section. A Servicemembers' Group Life Insurance Traumatic Injury Protection benefit payable under § 9.20(j)(3) shall not be payable to any person described in paragraph (e)(2) of this section.

(2) The persons described in this paragraph are:

(i) A person who is convicted of intentionally and wrongfully killing the decedent or determined in a civil proceeding to have intentionally and wrongfully killed the decedent;

(ii) A person who is convicted of assisting or aiding, or determined in a civil proceeding to have assisted or aided, a person described in paragraph (e)(2)(i) of this section; and

(iii) A member of the family of a person described in paragraph (e)(2)(i) or (e)(2)(ii) of this section who is not related to the decedent by blood, legal adoption, or marriage.

(3) The Servicemembers' Group Life Insurance or Veterans' Group Life Insurance proceeds or Servicemembers' Group Life Insurance Traumatic Injury Protection benefit not payable under paragraph (e)(1) of this section to any person described in paragraph (e)(2) of this section is not payable to such persons even though the criminal conviction or civil determination is pending appeal.

(4)(i) Servicemembers' Group Life Insurance or Veterans' Group Life Insurance proceeds or a Servicemembers' Group Life Insurance Traumatic Injury Protection benefit not payable under paragraphs (e)(1) and (e)(2) of this section shall be payable to the first person or persons listed in paragraphs (e)(4)(i)(A) through (F) of

this section who are surviving on the date of the decedent's death in the following order of precedence:

(A) To the next eligible beneficiary designated by the decedent in a writing received by the appropriate office of the applicable uniformed service before the decedent's death in the uniformed services in the case of Servicemembers' Group Life Insurance proceeds or a Servicemembers' Group Life Insurance Traumatic Injury Protection benefit, or in a writing received by the administrative office defined in § 9.1(b) of this part before the decedent's death in the case of Veterans' Group Life Insurance proceeds;

(B) To the decedent's widow or widower;

(C) To the decedent's child or children, in equal shares, and descendants of deceased children by representation;

(D) To the decedent's parents, in equal shares, or to the survivor of them;

(E) To the duly appointed executor or administrator of the decedent's estate;

(F) To other next of kin of the decedent as determined by the insurer (defined in § 9.1(c) of this part) under the laws of the domicile of the decedent at the time of the decedent's death.

(ii) Payment of Servicemembers' Group Life Insurance or Veterans' Group Life Insurance proceeds or a Servicemembers' Group Life Insurance Traumatic Injury Protection benefit to any person under paragraph (e)(4)(i) of this section shall bar recovery of those proceeds or that benefit by any other person.

* * * * *

[FR Doc. 2012–24391 Filed 10–2–12; 8:45 am]

BILLING CODE 8320–01–P

ENVIRONMENTAL PROTECTION AGENCY

40 CFR Part 52

[EPA–R04–OAR–2010–1014; FRL–9734–4]

Approval and Promulgation of Implementation Plans; Kentucky 110(a)(1) and (2) Infrastructure Requirements for the 1997 and 2006 Fine Particulate Matter National Ambient Air Quality Standards

AGENCY: Environmental Protection Agency (EPA).

ACTION: Final rule.

SUMMARY: EPA is taking final action to approve in part, and conditionally approve in part, the State Implementation Plan (SIP) revisions, submitted by the Commonwealth of Kentucky through the Kentucky Energy and Environment Cabinet, Division for Air Quality (DAQ), as demonstrating that the Commonwealth meets certain requirements of sections 110(a)(1) and (2) of the Clean Air Act (CAA or the Act) for the 1997 annual and 2006 24-hour fine particulate matter ($PM_{2.5}$) national ambient air quality standards (NAAQS). Section 110(a) of the CAA requires that each state adopt and submit a SIP for the implementation, maintenance, and enforcement of each NAAQS promulgated by EPA, which is commonly referred to as an ''infrastructure'' SIP. The Commonwealth certified that the Kentucky SIP contains provisions that ensure the 1997 annual and 2006 24-hour $PM_{2.5}$ NAAQS are implemented, enforced, and maintained in the Commonwealth (hereafter referred to as ''infrastructure submission''). With the exception of elements 110(a)(2)(C), 110(a)(2)(D)(i), 110(a)(2)(E)(ii) and 110(a)(2)(J), EPA is today finalizing its determination that Kentucky's infrastructure submissions, provided to EPA on August 26, 2008, and July 17, 2012, addressed all the required infrastructure elements for the 1997 annual and 2006 24-hour PM_2 NAAQS. In addition, EPA is today taking final action to approve Kentucky's July 17, 2012, submittal addressing the requirements of section 128 of the CAA. Final approval of these substantive revisions to the Kentucky SIP also enables EPA to take final action today approving the Commonwealth's infrastructure SIP as meeting the state board requirements of section 110(a)(2)(E)(ii). Lastly, EPA is taking final action to conditionally approve elements 110(a)(2)(C) and (J) of Kentucky's 1997 annual and 2006 24-hour $PM_{2.5}$ NAAQS infrastructure SIP.

DATES: This rule is effective November 2, 2012.

ADDRESSES: EPA has established a docket for this action under Docket Identification No. EPA–R04–OAR–2010–1014. All documents in the docket are listed on the *www.regulations.gov* Web site. Although listed in the index, some information is not publicly available, i.e., Confidential Business Information or other information whose disclosure is restricted by statute. Certain other material, such as copyrighted material, is not placed on the Internet and will be publicly available only in hard copy form. Publicly available docket materials are available either electronically through *www.regulations.gov* or in hard copy at the Regulatory Development Section, Air Planning Branch, Air, Pesticides and Toxics Management Division, U.S. Environmental Protection Agency, Region 4, 61 Forsyth Street SW., Atlanta, Georgia 30303–8960. EPA requests that if at all possible, you contact the person listed in the **FOR FURTHER INFORMATION CONTACT** section to schedule your inspection. The Regional Office's official hours of business are Monday through Friday, 8:30 to 4:30 excluding Federal holidays.

FOR FURTHER INFORMATION CONTACT: Sean Lakeman, Regulatory Development Section, Air Planning Branch, Air, Pesticides and Toxics Management Division, U.S. Environmental Protection Agency, Region 4, 61 Forsyth Street SW., Atlanta, Georgia 30303–8960. The telephone number is (404) 562–9043. Mr. Lakeman can be reached via electronic mail at *lakeman.sean@epa.gov.*

SUPPLEMENTARY INFORMATION:

Table of Contents

I. Background
II. This Action
III. Final Action
IV. Statutory and Executive Order Reviews

I. Background

Upon promulgation of a new or revised NAAQS, sections 110(a)(1) and (2) of the CAA require states to address basic SIP requirements, including emissions inventories, monitoring, and modeling to assure attainment and maintenance for that new NAAQS. On July 18, 1997 (62 FR 38652), EPA promulgated a new annual $PM_{2.5}$ NAAQS and on October 17, 2006 (71 FR 61144), EPA promulgated a new 24-hour NAAQS. On August 3, 2012, EPA proposed to approve in part, and conditionally approve in part, Kentucky's August 26, 2008, and July 17, 2012, infrastructure submissions for the 1997 annual and 2006 24-hour $PM_{2.5}$ NAAQS. *See* 77 FR 46352. A summary of the background for today's final action is provided below. See EPA's August 3, 2012, proposed rulemaking at 77 FR 46352 for more detail.

Section 110(a) of the CAA requires states to submit SIPs to provide for the implementation, maintenance, and enforcement of a new or revised NAAQS within three years following the promulgation of such NAAQS, or within such shorter period as EPA may prescribe. Section 110(a) imposes the obligation upon states to make a SIP submission to EPA for a new or revised NAAQS, but the contents of that submission may vary depending upon the facts and circumstances. The data and analytical tools available at the time the state develops and submits the SIP for a new or revised NAAQS affects the content of the submission. The contents

of such SIP submissions may also vary depending upon what provisions the state's existing SIP already contains. In the case of the 1997 annual and 2006 24-hour $PM_{2.5}$ NAAQS, states typically have met the basic program elements required in section 110(a)(2) through earlier SIP submissions in connection with previous PM NAAQS.

More specifically, section 110(a)(1) provides the procedural and timing requirements for SIPs. Section 110(a)(2) lists specific elements that states must meet for ''infrastructure'' SIP requirements related to a newly established or revised NAAQS. As already mentioned, these requirements include SIP infrastructure elements such as modeling, monitoring, and emissions inventories that are designed to assure attainment and maintenance of the NAAQS. The requirements that are the subject of this final rulemaking are listed below [1] and in EPA's October 2, 2007, memorandum entitled ''Guidance on SIP Elements Required Under Section 110(a)(1) and (2) for the 1997 8-Hour Ozone and $PM_{2.5}$ National Ambient Air Quality Standards'' and September 25, 2009, memorandum entitled ''Guidance on SIP Elements Required Under Section 110(a)(1) and (2) for the 2006 24-Hour Fine Particle ($PM_{2.5}$) National Ambient Air Quality Standards.''

- 110(a)(2)(A): Emission limits and other control measures.
- 110(a)(2)(B): Ambient air quality monitoring/data system.
- 110(a)(2)(C): Program for enforcement of control measures.[2]
- 110(a)(2)(D): Interstate transport.[3]
- 110(a)(2)(E): Adequate resources.
- 110(a)(2)(F): Stationary source monitoring system.
- 110(a)(2)(G): Emergency power.
- 110(a)(2)(H): Future SIP revisions.
- 110(a)(2)(I): Areas designated nonattainment and meet the applicable requirements of part D.[4]
- 110(a)(2)(J): Consultation with government officials; public notification; and PSD and visibility protection.
- 110(a)(2)(K): Air quality modeling/data.
- 110(a)(2)(L): Permitting fees.
- 110(a)(2)(M): Consultation/participation by affected local entities.

II. This Action

Section 110(a) of the CAA requires that each state adopt and submit a SIP for the implementation, maintenance, and enforcement of each NAAQS promulgated by the EPA, which is commonly referred to as an ''infrastructure'' SIP. The Commonwealth certified that the Kentucky SIP contains provisions that ensure the 1997 annual and 2006 24-hour $PM_{2.5}$ NAAQS are implemented, enforced, and maintained in the Commonwealth.

Today, EPA is taking final action on three actions related to Kentucky's section 110(a) obligations associated with the 1997 annual and 2006 24-hour $PM_{2.5}$ NAAQS. First, EPA has determined that, as described in its infrastructure submissions, Kentucky's SIP meets the section 110(a)(2) infrastructure requirements for both the 1997 annual and 2006 24-hour $PM_{2.5}$ NAAQS with the exception of elements 110(a)(2)(C) respecting prevention of significant deterioration (PSD) requirements, 110(a)(2)(D)(i) regarding interstate transport, and 110(a)(2)(J) respecting PSD requirements. Second, EPA is approving Kentucky's July 17, 2012, submission requesting approval of Kentucky Revised Statutes (KRS) Chapters 11A.020, 11A.030, 11A.040, 224.10–020 and 224.10–100 into the SIP to address element 110(a)(2)(E)(ii), related to state board requirements. Third, with respect to elements 110(a)(2)(C) and 110(a)(2)(J) as they both relate to PSD requirements, EPA is finalizing a conditional approval for these elements. On July 3, 2012, the Commonwealth submitted a commitment letter to EPA requesting conditional approval of outstanding requirements related to sections 110(a)(2)(C) and 110(a)(2)(J). In this letter, Kentucky provided a schedule on how the Commonwealth will address outstanding requirements promulgated in the New Source Review (NSR) $PM_{2.5}$ Rule related to the $PM_{2.5}$ standard for their PSD program and committing to providing the necessary SIP revision to address these NSR $PM_{2.5}$ Rule requirements. This letter of commitment meets the requirements of section 110(k)(4) of the CAA. See EPA's August 3, 2012, proposed rulemaking at 77 FR 46352 for more detail. If the Commonwealth fails to submit these revisions by October 3, 2013, today's conditional approval will automatically become a disapproval on that date and EPA will issue a finding of disapproval. EPA is not required to propose the finding of disapproval. If the conditional approval is converted to a disapproval, the final disapproval triggers the Federal Implementation Plan requirement under section 110(c). However, if the State meets its commitment within the applicable timeframe, the conditionally approved submission will remain a part of the SIP until EPA takes final action approving or disapproving the new submittal.

Kentucky's infrastructure submissions, provided to EPA on August 26, 2008, and July 17, 2012, and the July 3, 2012, letter of commitment address all the required infrastructure elements for the 1997 annual and 2006 24-hour $PM_{2.5}$ NAAQS with the exception of element 110(a)(D)(i). For those infrastructure elements for which EPA is today finalize approval, the Agency has determined that the Commonwealth's August 26, 2008, and July 17, 2012, submissions are consistent with section 110 of the CAA.

EPA received one off-topic comment on its August 3, 2012, proposed rulemaking to approve Kentucky's August 26, 2008, and July 17, 2012, infrastructure submissions as meeting the requirements of sections 110(a)(1) and (2) of the CAA for the 1997 annual and 2006 24-hour $PM_{2.5}$ NAAQS.

The comment was focused on the promulgation of the particulate matter NAAQS, and not the current rulemaking action. The Commenter stated that EPA $PM_{2.5}$ standard forces expensive mandates on states and industry and the designation process places a strain on local resources and discourages economic growth and EPA should withdraw the $PM_{2.5}$ standard. Also, the Commenter stated that EPA should consider public interest prior to entering into consent decrees.

This comment does not appear to be related to the issues presented in the proposed rulemaking—and instead, related to a wholly separate topic, promulgation of the PM NAAQS. The Commenter did not provide comments

[1] Two elements identified in section 110(a)(2) are not governed by the three year submission deadline of section 110(a)(1) because SIPs incorporating necessary local nonattainment area controls are not due within three years after promulgation of a new or revised NAAQS, but rather are due at the time the nonattainment area plan requirements are due pursuant to section 172. These requirements are: (1) Submissions required by section 110(a)(2)(C) to the extent that subsection refers to a permit program as required in part D Title I of the CAA, and (2) submissions required by section 110(a)(2)(I) which pertain to the nonattainment planning requirements of part D, Title I of the CAA. Today's final rulemaking does not address infrastructure elements related to section 110(a)(2)(I) or the nonattainment plan requirements of section 110(a)(2)(C).

[2] This rulemaking only addresses requirements for this element as they relate to attainment areas.

[3] Today's final rule does not address element 110(a)(2)(D)(i) (Interstate Transport) for the 1997 and 2006 $PM_{2.5}$ NAAQS.

[4] This requirement was inadvertently omitted from EPA's October 2, 2007, memorandum entitled ''Guidance on SIP Elements Required Under Section 110(a)(1) and (2) for the 1997 8-Hour Ozone and $PM_{2.5}$ National Ambient Air Quality Standards,'' but as mentioned above is not relevant to today's final rulemaking.

relevant to EPA's August 3, 2012, proposed approval of Kentucky's infrastructure submissions for the 1997 annual and 2006 24-hour $PM_{2.5}$ NAAQS. Instead, the Commenter appears to be providing comment on EPA's promulgation of PM NAAQS. Promulgations of NAAQS involve public comment opportunities and that would be the time to raise concerns specific to a particular NAAQS. Additionally, with regard to Commenter's general statement about consent decrees, although it is not clear to which specific consent decree commenter is referring, the CAA does provide for opportunities for public input regarding certain consent decrees.

EPA does not interpret these comments as relevant to the topic of EPA's proposed action on August 3, 2012, which is proposed approval, in part, and conditional approval, in part, of Kentucky's infrastructure submissions for the existing 1997 annual and 2006 24-hour $PM_{2.5}$ NAAQS. Instead, EPA interprets these comments to be off-topic and outside of the scope of today's final rulemaking.

Kentucky's infrastructure submissions, provided to EPA on August 26, 2008, and July 17, 2012, and the July 3, 2012, letter of commitment address all the required infrastructure elements for the 1997 annual and 2006 24-hour $PM_{2.5}$ NAAQS with the exception of element 110(a)(D)(i). For those infrastructure elements for which EPA is today finalize approval, the Agency has determined that the Commonwealth's August 26, 2008, and July 17, 2012, submissions are consistent with section 110 of the CAA.

III. Final Action

As already described, Kentucky has addressed the elements of the CAA 110(a)(1) and (2) SIP requirements pursuant to EPA's October 2, 2007, guidance to ensure that 1997 annual and 2006 24-hour $PM_{2.5}$ NAAQS are implemented, enforced, and maintained in the Commonwealth with the exception of the elements noted above. EPA is taking final action to approve in part, and conditionally approve in part, Kentucky's August 26, 2008, and July 17, 2012, submissions for 1997 annual and 2006 24-hour $PM_{2.5}$ NAAQS because these submissions are consistent with section 110 of the CAA. These actions are not approving any specific rule, but rather making a determination that Kentucky's already approved SIP meets certain CAA requirements.

In addition, EPA is also taking final action to approve KRS Chapters 11A.020, 11A.030, 11A.040, 224.020 and 224.10–100 in the SIP.

IV. Statutory and Executive Order Reviews

Under the CAA, the Administrator is required to approve a SIP submission that complies with the provisions of the Act and applicable federal regulations. 42 U.S.C. 7410(k); 40 CFR 52.02(a). Thus, in reviewing SIP submissions, EPA's role is to approve state choices, provided that they meet the criteria of the CAA. Accordingly, this action merely approves state law as meeting federal requirements and does not impose additional requirements beyond those imposed by Commonwealth law. For that reason, this action:

- Is not a ''significant regulatory action'' subject to review by the Office of Management and Budget under Executive Order 12866 (58 FR 51735, October 4, 1993);
- Does not impose an information collection burden under the provisions of the Paperwork Reduction Act (44 U.S.C. 3501 *et seq.*);
- Is certified as not having a significant economic impact on a substantial number of small entities under the Regulatory Flexibility Act (5 U.S.C. 601 *et seq.*);
- Does not contain any unfunded mandate or significantly or uniquely affect small governments, as described in the Unfunded Mandates Reform Act of 1995 (Pub. L. 104–4);
- Does not have Federalism implications as specified in Executive Order 13132 (64 FR 43255, August 10, 1999);
- Is not an economically significant regulatory action based on health or safety risks subject to Executive Order 13045 (62 FR 19885, April 23, 1997);
- Is not a significant regulatory action subject to Executive Order 13211 (66 FR 28355, May 22, 2001);
- Is not subject to requirements of Section 12(d) of the National Technology Transfer and Advancement Act of 1995 (15 U.S.C. 272 note) because application of those requirements would be inconsistent with the CAA; and
- Does not provide EPA with the discretionary authority to address, as appropriate, disproportionate human health or environmental effects, using practicable and legally permissible methods, under Executive Order 12898 (59 FR 7629, February 16, 1994).

In addition, this rule does not have tribal implications as specified by Executive Order 13175 (65 FR 67249, November 9, 2000), because the SIP is not approved to apply in Indian country, and EPA notes that it will not impose substantial direct costs on tribal governments or preempt tribal law.

The Congressional Review Act, 5 U.S.C. 801 *et seq.,* as added by the Small Business Regulatory Enforcement Fairness Act of 1996, generally provides that before a rule may take effect, the agency promulgating the rule must submit a rule report, which includes a copy of the rule, to each House of the Congress and to the Comptroller General of the United States. EPA will submit a report containing this action and other required information to the U.S. Senate, the U.S. House of Representatives, and the Comptroller General of the United States prior to publication of the rule in the **Federal Register**. A major rule cannot take effect until 60 days after it is published in the **Federal Register**. This action is not a ''major rule'' as defined by 5 U.S.C. 804(2).

Under section 307(b)(1) of the CAA, petitions for judicial review of this action must be filed in the United States Court of Appeals for the appropriate circuit by December 3, 2012. Filing a petition for reconsideration by the Administrator of this final rule does not affect the finality of this action for the purposes of judicial review nor does it extend the time within which a petition for judicial review may be filed, and shall not postpone the effectiveness of such rule or action. This action may not be challenged later in proceedings to enforce its requirements. *See* section 307(b)(2).

List of Subjects in 40 CFR Part 52

Environmental protection, Air pollution control, Incorporation by reference, Intergovernmental relations, Nitrogen dioxide, Particulate matter, Reporting and recordkeeping requirements, Volatile organic compounds.

Dated: September 13, 2012.

A. Stanley Meiburg,

Acting Regional Administrator, Region 4.

40 CFR part 52 is amended as follows:

PART 52—[AMENDED]

■ 1. The authority citation for part 52 continues to read as follows:

Authority: 42 U.S.C. 7401 *et seq.*

Subpart S—Kentucky

■ 2. Section 52.919 is revised to read as follows:

§ 52.919 Identification of plan-conditional approval.

Kentucky submitted a letter to EPA on July 3, 2012, which includes a commitment to address the State Implementation Plan deficiencies

regarding requirements of Clean Air Act sections 110(a)(2)(C) and 110(a)(2)(J) as they both relate to Prevention of Significant Deterioration (PSD) infrastructure requirements for the 1997 annual and 2006 24-hour fine particulate matter ($PM_{2.5}$) national ambient air quality standards. EPA is conditionally approving Kentucky's schedule to address outstanding requirements promulgated in the New Source Review (NSR) $PM_{2.5}$ Rule related to the $PM_{2.5}$ standard for their PSD program and committing to providing the necessary SIP revision to address these NSR $PM_{2.5}$ Rule requirements. If the Commonwealth fails to submit these revisions by October 3, 2013, the conditional approval will automatically become a disapproval on that date and EPA will issue a finding of disapproval.

■ 3. Section 52.920 is amended by:

■ a. In paragraph (c), adding in numerical order a new entry for ''Kentucky Revised Statutes (KRS)'' at the end of the table 1 to read as follows:

■ b. In paragraph (e), adding two new entries for ''110(a)(1) and (2) Infrastructure Requirements for the 1997 Fine Particulate Matter National Ambient Air Quality Standards'' and ''110(a)(1) and (2) Infrastructure Requirements for the 2006 Fine Particulate Matter National Ambient Air Quality Standards'' at the end of the table to read as follows:

§ 52.920 Identification of plan.

* * * * *

(c) * * *

TABLE 1—EPA-APPROVED KENTUCKY REGULATIONS

State citation	Title/subject	State effective date	EPA approval date	Explanations
*	*	*	*	*
Kentucky Revised Statutes (KRS)				
KRS Chapter 11A.020	Public servant prohibited from certain conduct-Exception-Disclosure of personal or private interest.	7/15/1998	10/3/2012 [Insert citation of publication].	
KRS Chapter 11A.030	Considerations in determination to abstain from action on official decision-Advisory opinion.	7/14/1992	10/3/2012 [Insert citation of publication].	
KRS Chapter 11A.040	Acts prohibited for public servant or officer-exception.	7/16/2006	10/3/2012 [Insert citation of publication].	
KRS Chapter 224.10–020	Department within the cabinet-Offices and divisions within the departments-Appointments.	7/15/2010	10/3/2012 [Insert citation of publication].	
KRS Chapter 224.10–100	Powers and duties of cabinet	8/30/2007	10/3/2012 [Insert citation of publication].	

* * * * *

(e) * * *

EPA-APPROVED KENTUCKY NON-REGULATORY PROVISIONS

Name of non-regulatory SIP provision	Applicable geographic or non-attainment area	State submittal date/effective date	EPA approval date	Explanations
*	*	*	*	*
110(a)(1) and (2) Infrastructure Requirements for 1997 Fine Particulate Matter National Ambient Air Quality Standards.	Kentucky	8/26/2008	10/3/2012 [Insert citation of publication].	With the exception of section 110(a)(2)(D)(i), With respect to sections 110(a)(2)(C) related to PSD requirements and 110(a)(2)(J) related to PSD requirements, EPA conditionally approved these requirements.
110(a)(1) and (2) Infrastructure Requirements for 2006 Fine Particulate Matter National Ambient Air Quality Standards.	Kentucky	7/17/2012	10/3/2012 [Insert citation of publication].	With the exception of section 110(a)(2)(D)(i), With respect to sections 110(a)(2)(C) related to PSD requirements and 110(a)(2)(J) related to PSD requirements, EPA conditionally approved these requirements.

[FR Doc. 2012–23988 Filed 10–2–12; 8:45 am]
BILLING CODE 6560–50–P

ENVIRONMENTAL PROTECTION AGENCY

40 CFR Part 180

[EPA–HQ–OPP–2012–0029; FRL–9362–5]

Chlorantraniliprole; Pesticide Tolerances

AGENCY: Environmental Protection Agency (EPA).

ACTION: Final rule.

SUMMARY: This regulation establishes tolerances for residues of chlorantraniliprole in or on multiple commodities which are identified and discussed later in this document. E.I. DuPont de Nemours and Company, DuPont Crop Protection, requested these tolerances under the Federal Food, Drug, and Cosmetic Act (FFDCA).

DATES: This regulation is effective October 3, 2012. Objections and requests for hearings must be received on or before December 3, 2012, and must be filed in accordance with the instructions provided in 40 CFR part 178 (see also Unit I.C. of the **SUPPLEMENTARY INFORMATION**).

ADDRESSES: The docket for this action, identified by docket identification (ID) number EPA–HQ–OPP–2012–0029, is available at *http://www.regulations.gov* or at the Office of Pesticide Programs Regulatory Public Docket (OPP Docket) in the Environmental Protection Agency Docket Center (EPA/DC), EPA West Bldg., Rm. 3334, 1301 Constitution Ave. NW., Washington, DC 20460–0001. The Public Reading Room is open from 8:30 a.m. to 4:30 p.m., Monday through Friday, excluding legal holidays. The telephone number for the Public Reading Room is (202) 566–1744, and the telephone number for the OPP Docket is (703) 305–5805. Please review the visitor instructions and additional information about the docket available at *http://www.epa.gov/dockets.*

FOR FURTHER INFORMATION CONTACT: Jennifer Urbanski, Registration Division (7505P), Office of Pesticide Programs, Environmental Protection Agency, 1200 Pennsylvania Ave. NW., Washington, DC 20460–0001; telephone number: (703) 347–0156; email address: *urbanski.jennifer@epa.gov.*

SUPPLEMENTARY INFORMATION:

I. General Information

A. Does this action apply to me?

You may be potentially affected by this action if you are an agricultural producer, food manufacturer, or pesticide manufacturer. The following list of North American Industrial Classification System (NAICS) codes is not intended to be exhaustive, but rather provides a guide to help readers determine whether this document applies to them. Potentially affected entities may include:

- Crop production (NAICS code 111).
- Animal production (NAICS code 112).
- Food manufacturing (NAICS code 311).
- Pesticide manufacturing (NAICS code 32532).

B. How can I get electronic access to other related information?

You may access a frequently updated electronic version of EPA's tolerance regulations at 40 CFR part 180 through the Government Printing Office's e-CFR site at *http://ecfr.gpoaccess.gov/cgi/t/text/text-idx?&c=ecfr&tpl=/ecfrbrowse/Title40/40tab_02.tpl.*

C. How can I file an objection or hearing request?

Under FFDCA section 408(g), 21 U.S.C. 346a, any person may file an objection to any aspect of this regulation and may also request a hearing on those objections. You must file your objection or request a hearing on this regulation in accordance with the instructions provided in 40 CFR part 178. To ensure proper receipt by EPA, you must identify docket ID number EPA–HQ–OPP–2012–0029 in the subject line on the first page of your submission. All objections and requests for a hearing must be in writing, and must be received by the Hearing Clerk on or before December 3, 2012. Addresses for mail and hand delivery of objections and hearing requests are provided in 40 CFR 178.25(b).

In addition to filing an objection or hearing request with the Hearing Clerk as described in 40 CFR part 178, please submit a copy of the filing (excluding any Confidential Business Information (CBI)) for inclusion in the public docket. Information not marked confidential pursuant to 40 CFR part 2 may be disclosed publicly by EPA without prior notice. Submit the non-CBI copy of your objection or hearing request, identified by docket ID number EPA–HQ–OPP–2012–0029, by one of the following methods:

- *Federal eRulemaking Portal: http://www.regulations.gov.* Follow the online instructions for submitting comments. Do not submit electronically any information you consider to be Confidential Business Information (CBI) or other information whose disclosure is restricted by statute.
- *Mail:* OPP Docket, Environmental Protection Agency Docket Center (EPA/DC), (28221T), 1200 Pennsylvania Ave. NW., Washington, DC 20460–0001.
- *Hand Delivery:* To make special arrangements for hand delivery or delivery of boxed information, please follow the instructions at *http://www.epa.gov/dockets/contacts.htm.*

Additional instructions on commenting or visiting the docket, along with more information about dockets generally, is available at *http://www.epa.gov/dockets.*

II. Summary of Petitioned-For Tolerance

In the **Federal Register** of April 4, 2012 (77 FR 20344) (FRL–9340–4), EPA issued a document pursuant to FFDCA section 408(d)(3), 21 U.S.C. 346a(d)(3), announcing the filing of a pesticide petition (PP 1F7954) by E.I. DuPont de Nemours and Company, DuPont Crop Protection, 1007 Market Street, Wilmington, DE 19898. The petition requested that 40 CFR 180.628 be amended by establishing tolerances for residues of the insecticide chlorantraniliprole,3-bromo-N-[4-chloro-2-methyl-6-[(methylamino)carbonyl]phenyl]-1-(3-chloro-2-pyridinyl)-1H-pyrazole-5-carboxamide, in or on oilseed, rapeseed subgroup 20A at 2.0 parts per million (ppm); oilseed, sunflower subgroup 20B at 2.0 ppm; oilseed, cottonseed subgroup 20C at 0.3 ppm; soybean aspirated grain fractions at 300 ppm; vegetable, legume, group 6 at 2.0 ppm; vegetable, foliage of legume, group 7 at 30 ppm; and forage, vegetable, foliage of legume, group 7 at 90 ppm. That document referenced a summary of the petition prepared by E. I. DuPont de Nemours and Company, the registrant, which is available in the docket, *http://www.regulations.gov.* Comments were received on the notice of filing. EPA's response to these comments is discussed in Unit IV.C.

Based upon review of the data supporting the petition, EPA has revised the tolerance associated with aspirated grain fractions to 640 ppm. EPA is also increasing the existing tolerances in cattle, fat; goat, fat; horse, fat; and sheep, fat to 0.5 ppm. EPA has also increased the existing tolerances in cattle, meat; goat, meat; horse, meat; and sheep, meat to 0.1 ppm. The reason for these changes are explained in Unit IV.D.

III. Aggregate Risk Assessment and Determination of Safety

Section 408(b)(2)(A)(i) of FFDCA allows EPA to establish a tolerance (the legal limit for a pesticide chemical residue in or on a food) only if EPA determines that the tolerance is ''safe.'' Section 408(b)(2)(A)(ii) of FFDCA defines ''safe'' to mean that ''there is a reasonable certainty that no harm will result from aggregate exposure to the pesticide chemical residue, including all anticipated dietary exposures and all other exposures for which there is reliable information.'' This includes exposure through drinking water and in residential settings, but does not include occupational exposure. Section 408(b)(2)(C) of FFDCA requires EPA to give special consideration to exposure of infants and children to the pesticide chemical residue in establishing a tolerance and to ''ensure that there is a reasonable certainty that no harm will result to infants and children from aggregate exposure to the pesticide chemical residue * * *''

Consistent with FFDCA section 408(b)(2)(D), and the factors specified in FFDCA section 408(b)(2)(D), EPA has reviewed the available scientific data and other relevant information in support of this action. EPA has sufficient data to assess the hazards of and to make a determination on aggregate exposure for chlorantraniliprole including exposure resulting from the tolerances established by this action. EPA's assessment of exposures and risks associated with chlorantraniliprole follows.

A. Toxicological Profile

EPA has evaluated the available toxicity data and considered its validity, completeness, and reliability as well as the relationship of the results of the studies to human risk. EPA has also considered available information concerning the variability of the sensitivities of major identifiable subgroups of consumers, including infants and children. Chlorantraniliprole is not genotoxic, neurotoxic, immunotoxic, carcinogenic, or developmentally toxic. Chlorantraniliprole is not acutely toxic via oral, dermal or inhalation routes of exposure, and is not an eye or skin irritant nor a dermal sensitizer. There was only one animal toxicity study (18-month carcinogenicity study in mice) in the toxicology database which evidenced any adverse effect of chlorantraniliprole. This study was used to establish a point of departure (POD), based on hepatocellular effects, for the chronic dietary exposure scenario. Although residential and occupational exposure is expected over the short- and intermediate-term (via the dermal and/or incidental oral route), there is no hazard expected via these routes/durations, and therefore no risk associated with these scenarios.

Specific information on the studies received and the nature of the adverse effects caused by chlorantraniliprole as well as the no-observed-adverse-effect-level (NOAEL) and the lowest-observed-adverse-effect-level (LOAEL) from the toxicity studies can be found at *http://www.regulations.gov* in document ''Chlorantraniliprole: Human Health Risk Assessment for Proposed Uses on Oilseeds (Subgroups 20A through C) and Soybean (Crop group 6 and 7),'' page 16 in docket ID number EPA–HQ–OPP–2012–0029.

B. Toxicological Points of Departure/Levels of Concern

Once a pesticide's toxicological profile is determined, EPA identifies toxicological POD and levels of concern to use in evaluating the risk posed by human exposure to the pesticide. For hazards that have a threshold below which there is no appreciable risk, the toxicological POD is used as the basis for derivation of reference values for risk assessment. PODs are developed based on a careful analysis of the doses in each toxicological study to determine the dose at which no adverse effects are observed (the NOAEL) and the lowest dose at which adverse effects of concern are identified (the LOAEL). Uncertainty/safety factors are used in conjunction with the POD to calculate a safe exposure level—generally referred to as a population-adjusted dose (PAD) or a reference dose (RfD)—and a safe margin of exposure (MOE). For non-threshold risks, the Agency assumes that any amount of exposure will lead to some degree of risk. Thus, the Agency estimates risk in terms of the probability of an occurrence of the adverse effect expected in a lifetime. For more information on the general principles EPA uses in risk characterization and a complete description of the risk assessment process, see *http://www.epa.gov/pesticides/factsheets/riskassess.htm.*

A summary of the toxicological endpoints for chlorantraniliprole used for human risk assessment is discussed in Unit III.B of the final rule published in the **Federal Register** of July 27, 2011 (76 FR 44815) (FRL–8875–5).

C. Exposure Assessment

1. *Dietary exposure from food and feed uses.* In evaluating dietary exposure to chlorantraniliprole, EPA considered exposure under the petitioned-for tolerances as well as all existing chlorantraniliprole tolerances in 40 CFR 180.628. EPA assessed dietary exposures from chlorantraniliprole in food as follows:

i. *Acute exposure.* Quantitative acute dietary exposure and risk assessments are performed for a food-use pesticide, if a toxicological study has indicated the possibility of an effect of concern occurring as a result of a 1-day or single exposure. No such effects were identified in the toxicological studies for chlorantraniliprole; therefore, a quantitative acute dietary exposure assessment is unnecessary.

ii. *Chronic exposure.* In conducting the chronic dietary exposure assessment EPA used the food consumption data from the United States Department of Agriculture (USDA) 1994–1996 and 1998 Continuing Survey of Food Intake by Individuals (CSFII). As to residue levels in food, EPA assumed tolerance levels residues and 100% crop treated (CT). Dietary Risk Evaluation System (DEEM) default processing factors were used.

iii. *Cancer.* Based on the data summarized in Unit III.A., EPA has concluded that chlorantraniliprole does not pose a cancer risk to humans. Therefore, a dietary exposure assessment for the purpose of assessing cancer risk is unnecessary.

iv. *Anticipated residue and percent crop treated (PCT) information.* EPA did not use anticipated residue and/or PCT information in the dietary assessment for chlorantraniliprole. Tolerance level residues and/or 100% CT were assumed for all food commodities.

2. *Dietary exposure from drinking water.* The Agency used screening level water exposure models in the dietary exposure analysis and risk assessment for chlorantraniliprole in drinking water. These simulation models take into account data on the physical, chemical, and fate/transport characteristics of chlorantraniliprole. Further information regarding EPA drinking water models used in pesticide exposure assessment can be found at *http://www.epa.gov/oppefed1/models/water/index.htm.*

Based on the First Index Reservoir Screening Tool (FIRST), Pesticide Root Zone Model/Exposure Analysis Modeling System (PRZM/EXAMS) and Screening Concentration in Ground Water (SCI–GROW) models, the estimated drinking water concentrations (EDWCs) of chlorantraniliprole for acute exposures are estimated to be 55.30 parts per billion (ppb) for surface water and 0.842 ppb for ground water, and for chronic exposures for cancer and non-

cancer assessments are estimated to be 39.87 ppb for surface water and 0.842 ppb for ground water.

Modeled estimates of drinking water concentrations were directly entered into the dietary exposure model. For chronic dietary risk assessment, the water concentration of value 39.87 ppb was used to assess the contribution to drinking water. No acute dietary risk assessment was performed because no acute hazard was identified.

3. *From non-dietary exposure.* The term ''residential exposure'' is used in this document to refer to non-occupational, non-dietary exposure (e.g., for lawn and garden pest control, indoor pest control, termiticides, and flea and tick control on pets). Chlorantraniliprole is currently registered for the following uses that could result in residential exposures: Termiticide, ornamentals, and turfgrass. EPA assessed residential exposure using the following assumptions: Residential exposure could occur for short-term and intermediate-term durations; however, due to the lack of toxicity identified for short- and intermediate-term durations via relevant routes of exposure, no risk is expected from these exposures. Further information regarding EPA standard assumptions and generic inputs for residential exposures may be found at *http://www.epa.gov/pesticides/trac/science/trac6a05.pdf.*

4. *Cumulative effects from substances with a common mechanism of toxicity.* Section 408(b)(2)(D)(v) of FFDCA requires that, when considering whether to establish, modify, or revoke a tolerance, the Agency consider ''available information'' concerning the cumulative effects of a particular pesticide's residues and ''other substances that have a common mechanism of toxicity.'' EPA has not found chlorantraniliprole to share a common mechanism of toxicity with any other substances, and chlorantraniliprole does not appear to produce a toxic metabolite produced by other substances. For the purposes of this tolerance action, therefore, EPA has assumed that chlorantraniliprole does not have a common mechanism of toxicity with other substances. For information regarding EPA's efforts to determine which chemicals have a common mechanism of toxicity and to evaluate the cumulative effects of such chemicals, see EPA's Web site at *http://www.epa.gov/pesticides/cumulative.*

D. Safety Factor for Infants and Children

1. *In general.* Section 408(b)(2)(C) of FFDCA provides that EPA shall apply an additional tenfold (10X) margin of safety for infants and children in the case of threshold effects to account for prenatal and postnatal toxicity and the completeness of the database on toxicity and exposure unless EPA determines based on reliable data that a different margin of safety will be safe for infants and children. This additional margin of safety is commonly referred to as the Food Quality Protection Act Safety Factor (FQPA SF). In applying this provision, EPA either retains the default value of 10X, or uses a different additional safety factor when reliable data available to EPA support the choice of a different factor.

2. *Prenatal and postnatal sensitivity.* There were no effects on fetal growth or postnatal development up to the limit dose of 1,000 milligrams/kilogram/day (mg/kg/day) in rats or rabbits in the development or 2-generation reproduction studies. Additionally, there were no treatment related effects on the numbers of litters, fetuses (live or dead), resorptions, sex ratio, or post-implantation loss and no effects on fetal body weights, skeletal ossification, and external, visceral, or skeletal malformations or variations.

3. *Conclusion.* EPA has determined that reliable data show the safety of infants and children would be adequately protected if the FQPA SF were reduced to 1X. That decision is based on the following findings:

i. The toxicity database for chlorantraniliprole is complete.

ii. There is no indication that chlorantraniliprole is a neurotoxic chemical and there is no need for a developmental neurotoxicity study or additional UFs to account for neurotoxicity.

iii. There is no evidence that chlorantraniliprole results in increased susceptibility in *in utero* rats or rabbits in the prenatal developmental studies or in young rats in the 2-generation reproduction study.

iv. There are no residual uncertainties identified in the exposure databases. A poultry feeding study is needed, but the results of the poultry metabolism study conducted at a feeding level twice the expected dietary burden and at a duration of 14 days, well in excess of the mandatory 3 days, are used to provide a conservative estimate of residues in poultry commodities. The dietary food exposure assessments were performed based on 100% CT and tolerance-level residues. EPA made conservative (protective) assumptions in the ground and surface water modeling used to assess exposure to chlorantraniliprole in drinking water. EPA used similarly conservative assumptions to assess postapplication exposure of children as well as incidental oral exposure of toddlers. These assessments will not underestimate the exposure and risks posed by chlorantraniliprole.

E. Aggregate Risks and Determination of Safety

EPA determines whether acute and chronic dietary pesticide exposures are safe by comparing aggregate exposure estimates to the acute PAD (aPAD) and chronic PAD (cPAD). For linear cancer risks, EPA calculates the lifetime probability of acquiring cancer given the estimated aggregate exposure. Short-, intermediate-, and chronic-term risks are evaluated by comparing the estimated aggregate food, water, and residential exposure to the appropriate PODs to ensure that an adequate MOE exists.

1. *Acute risk.* An acute aggregate risk assessment takes into account acute exposure estimates from dietary consumption of food and drinking water. No adverse effect resulting from a single oral exposure was identified and no acute dietary endpoint was selected. Therefore, chlorantraniliprole is not expected to pose an acute risk.

2. *Chronic risk.* Using the exposure assumptions described in this unit for chronic exposure, EPA has concluded that chronic exposure to chlorantraniliprole from food and water will utilize 6% of the cPAD for children 1–2 years old, the population group receiving the greatest exposure. Based on the explanation in Unit III.C.3., regarding residential use patterns, chronic residential exposure to residues of chlorantraniliprole is not expected.

3. *Short-term risk.* Short-term aggregate exposure takes into account short-term residential exposure plus chronic exposure to food and water (considered to be a background exposure level). Because no short-term adverse effect was identified, chlorantraniliprole is not expected to pose a short-term risk.

4. *Intermediate-term risk.* Intermediate-term aggregate exposure takes into account intermediate-term residential exposure plus chronic exposure to food and water (considered to be a background exposure level). Because no intermediate-term adverse effect was identified, chlorantraniliprole is not expected to pose a intermediate-term risk.

5. *Aggregate cancer risk for U.S. population.* Based on the lack of evidence of carcinogenicity in two adequate rodent carcinogenicity studies, chlorantraniliprole is not expected to pose a cancer risk to humans.

6. *Determination of safety.* Based on these risk assessments, EPA concludes that there is a reasonable certainty that no harm will result to the general population, or to infants and children from aggregate exposure to chlorantraniliprole residues.

IV. Other Considerations

A. Analytical Enforcement Methodology

Adequate enforcement methodology (liquid chromatography mass spectrometry (LC/MS/MS)) is available to enforce the tolerance expression. The method may be requested from: Chief, Analytical Chemistry Branch, Environmental Science Center, 701 Mapes Rd., Ft. Meade, MD 20755–5350; telephone number: (410) 305–2905; email address: *residuemethods@epa.gov.*

B. International Residue Limits

In making its tolerance decisions, EPA seeks to harmonize U.S. tolerances with international standards whenever possible, consistent with U.S. food safety standards and agricultural practices. EPA considers the international maximum residue limits (MRLs) established by the Codex Alimentarius Commission (Codex), as required by FFDCA section 408(b)(4). The Codex Alimentarius is a joint United Nations Food and Agriculture Organization/World Health Organization food standards program, and it is recognized as an international food safety standards-setting organization in trade agreements to which the United States is a party. EPA may establish a tolerance that is different from a Codex MRL; however, FFDCA section 408(b)(4) requires that EPA explain the reasons for departing from the Codex level.

The Codex has established MRLs for chlorantraniliprole in or on the oilseed cottonseed subgroup 20C at 0.3 ppm. This MRL is the same as the tolerance being established for chlorantraniliprole the oilseed cottonseed subgroup 20C in the United States by this action.

The Codex has established MRLs for chlorantraniliprole in or on meat (fat) at 0.2 ppm. These MRLs are different than the tolerances being established for chlorantraniliprole in the United States on cattle, horse, sheep and goat fat (0.5 ppm) by this action. This results from the differences in treated commodities used in the livestock dietary exposure calculation and in the methods of diet calculation. The United States tolerances include more livestock feed items than Codex. Codex calculates the dietary burden based on the worst possible case, whereas NAFTA countries utilize a reasonably balanced diet that considered nutritional needs of livestock.

C. Response to Comments

The EPA received a comment from a private citizen stating that pesticides should be banned. The Agency understands the commenter's concerns and recognizes that some individuals believe that pesticides should be banned completely. However, under the existing legal framework provided by section 408 of the Federal Food, Drug and Cosmetic Act (FFDCA) EPA is authorized to establish pesticide tolerances or exemptions where persons seeking such tolerances or exemptions have demonstrated that the pesticide meets the safety standard imposed by that statute.

D. Revisions to Petitioned-for Tolerances

The petition requested an aspirated grain fractions tolerance of 300 ppm. EPA is establishing a 640 ppm tolerance in aspirated grain factions based on evaluation of the soybean processing data. A processing study submitted for the generation of aspirated grain dust from soybeans provided a processing factor (320) that was used with the crop group 6 tolerance (2.0 ppm) to obtain a tolerance estimate ($320 \times 2 = 640$ ppm) for aspirated grain fractions. Thus, soybeans with residues at the tolerance level (2 ppm) would yield aspirated grain fractions with residues of 640 ppm.

EPA is increasing the tolerance levels for certain livestock commodities because of the addition of soybean aspirated grain fractions as a feed item and the resulting increase in certain livestock dietary burdens. Previously, aspirated grain fractions (corn) contributed to the dietary burden; this is now replaced by soybean aspirated grain fractions which results in a greater dietary contribution. The beef cattle dietary burden is now elevated from 73 ppm to 110 ppm. This increase in the cattle dietary burden necessitates an increase in the tolerances of the meat and fat of cattle, sheep, horses, and goats. The existing tolerances for liver and kidney will cover the increased dietary exposure of cattle. The milk tolerance is not affected, because aspirated grain fractions are not a significant diary cow feed item.

V. Conclusion

Therefore, tolerances are established for residues of chlorantraniliprole, 3-bromo-*N*-[4-chloro-2-methyl-6-[(methylamino)carbonyl]phenyl]-1-(3-chloro-2-pyridinyl)-1*H*-pyrazole-5-carboxamide, in or on the following commodities: oilseed, rapeseed subgroup 20A at 2.0 ppm; oilseed, sunflower subgroup 20B at 2.0 ppm; oilseed, cottonseed subgroup 20C at 0.3 ppm; soybean aspirated grain fractions at 640 ppm; vegetable, legume, group 6 at 2.0 ppm; vegetable, foliage of legume, group 7, forage at 30 ppm; vegetable, foliage of legume, group 7, hay at 90 ppm; cattle, goat, horse and sheep, fat at 0.5 ppm, and cattle, goat, horse and sheep, meat at 0.1 ppm. Consistent with the petitioner's request, EPA is also deleting certain chlorantraniliprole tolerances that are no longer needed as a result of the crop group tolerances added by this action.

VI. Statutory and Executive Order Reviews

This final rule establishes tolerances under FFDCA section 408(d) in response to a petition submitted to the Agency. The Office of Management and Budget (OMB) has exempted these types of actions from review under Executive Order 12866, entitled ''Regulatory Planning and Review'' (58 FR 51735, October 4, 1993). Because this final rule has been exempted from review under Executive Order 12866, this final rule is not subject to Executive Order 13211, entitled ''Actions Concerning Regulations That Significantly Affect Energy Supply, Distribution, or Use'' (66 FR 28355, May 22, 2001) or Executive Order 13045, entitled ''Protection of Children from Environmental Health Risks and Safety Risks'' (62 FR 19885, April 23, 1997). This final rule does not contain any information collections subject to OMB approval under the Paperwork Reduction Act (PRA) (44 U.S.C. 3501 *et seq.*), nor does it require any special considerations under Executive Order 12898, entitled ''Federal Actions to Address Environmental Justice in Minority Populations and Low-Income Populations'' (59 FR 7629, February 16, 1994).

Since tolerances and exemptions that are established on the basis of a petition under FFDCA section 408(d), such as the tolerance in this final rule, do not require the issuance of a proposed rule, the requirements of the Regulatory Flexibility Act (RFA) (5 U.S.C. 601 *et seq.*), do not apply.

This final rule directly regulates growers, food processors, food handlers, and food retailers, not States or tribes, nor does this action alter the relationships or distribution of power and responsibilities established by Congress in the preemption provisions of FFDCA section 408(n)(4). As such, the Agency has determined that this

action will not have a substantial direct effect on States or tribal governments, on the relationship between the national government and the States or tribal governments, or on the distribution of power and responsibilities among the various levels of government or between the Federal Government and Indian tribes. Thus, the Agency has determined that Executive Order 13132, entitled ''Federalism'' (64 FR 43255, August 10, 1999) and Executive Order 13175, entitled ''Consultation and Coordination with Indian Tribal Governments'' (65 FR 67249, November 9, 2000) do not apply to this final rule. In addition, this final rule does not impose any enforceable duty or contain any unfunded mandate as described under Title II of the Unfunded Mandates Reform Act of 1995 (UMRA) (2 U.S.C. 1501 *et seq.*).

This action does not involve any technical standards that would require Agency consideration of voluntary consensus standards pursuant to section 12(d) of the National Technology Transfer and Advancement Act of 1995 (NTTAA) (15 U.S.C. 272 note).

VII. Congressional Review Act

Pursuant to the Congressional Review Act (5 U.S.C. 801 *et seq.*), EPA will submit a report containing this rule and other required information to the U.S. Senate, the U.S. House of Representatives, and the Comptroller General of the United States prior to publication of the rule in the **Federal Register**. This action is not a ''major rule'' as defined by 5 U.S.C. 804(2).

List of Subjects in 40 CFR Part 180

Environmental protection, Administrative practice and procedure, Agricultural commodities, Pesticides and pests, Reporting and recordkeeping requirements.

Dated: September 21, 2012.

Daniel J. Rosenblatt,

Acting Director, Registration Division, Office of Pesticide Programs.

Therefore, 40 CFR chapter I is amended as follows:

PART 180—[AMENDED]

■ 1. The authority citation for part 180 continues to read as follows:

Authority: 21 U.S.C. 321(q), 346a and 371.

■ 2. Section 180.628 is amended as follows:

■ i. Remove the entries for crambe, seed; grain, aspirated fractions; hare's ear mustard, seed; jojoba, seed; lesquerella, seed; milkweed, seed; mustard, seed; oil, radish, seed; poppy, seed; rapeseed, seed; rose hip, seed; sesame, seed; tallowwood, seed; tea oil plant, seed; vegetable, foliage of legume, except soybean, subgroup 7A, forage; vegetable, foliage of legume, except soybean, subgroup 7A, hay; and vegetable, legume, group 6, except soybeans; from the table in paragraph (a).

■ ii. Revise the tolerances for cattle, fat; cattle, meat; goat, fat; goat, meat; horse, fat; horse, meat; sheep, fat; sheep, meat; in the table in paragraph (a).

■ iii. Add alphabetically entries for cottonseed subgroup 20C, grain, aspirated grain fractions; rapeseed subgroup 20A; sunflower subgroup 20B; vegetable, legume, group 6; vegetable, foliage of legume, group 7, forage; and vegetable, foliage of legume, group 7, hay; to the table in paragraph (a).

■ iv. Remove the entries for soybean, forage, and soybean, hay, from the table in paragraph (d).

The added and revised text read as follows:

§ 180.628 Chlorantraniliprole; tolerances for residues.

Commodity	Parts per million
* * * * *	
Cattle, fat	0.5
Cattle, meat	0.1
* * * * *	
Cottonseed subgroup 20C	0.3
* * * * *	
Goat, fat	0.5
Goat, meat	0.1
* * * * *	
Grain, aspirated grain fractions	640
* * * * *	
Horse, fat	0.5
Horse, meat	0.1
* * * * *	
Rapeseed subgroup 20B	2.0
* * * * *	
Sheep, fat	0.5
Sheep, meat	0.1
* * * * *	
Sunflower subgroup 20C	0.3
* * * * *	
Vegetable, legume, group 6	2.0
Vegetable, foliage of legume, group 7, forage	30
Vegetable, foliage of legume, group 7, hay	90
* * * * *	

* * * * *

[FR Doc. 2012–24152 Filed 10–2–12; 8:45 am]

BILLING CODE 6560–50–P

DEPARTMENT OF HEALTH AND HUMAN SERVICES

Centers for Medicare & Medicaid Services

42 CFR Parts 412, 413, 424, and 476

[CMS–1588–CN2]

RIN 0938–AR12

Medicare Program; Hospital Inpatient Prospective Payment Systems for Acute Care Hospitals and the Long-Term Care Hospital Prospective Payment System and Fiscal Year 2013 Rates; Hospitals' Resident Caps for Graduate Medical Education Payment Purposes; Quality Reporting Requirements for Specific Providers and for Ambulatory Surgical Centers; Corrections

AGENCY: Centers for Medicare & Medicaid Services (CMS), HHS.

ACTION: Final rule; correction.

SUMMARY: This document corrects technical errors in the final rule that appeared in the August 31, 2012 **Federal Register** entitled ''Medicare Program; Hospital Inpatient Prospective Payment Systems for Acute Care Hospitals and the Long-Term Care Hospital Prospective Payment System and Fiscal Year 2013 Rates; Hospitals' Resident Caps for Graduate Medical Education Payment Purposes; Quality Reporting Requirements for Specific Providers and for Ambulatory Surgical Centers.''

DATES: *Effective Date:* October 1, 2012.

FOR FURTHER INFORMATION CONTACT: Tzvi Hefter, (410) 786–4487.

SUPPLEMENTARY INFORMATION:

I. Background

In FR Doc. 2012–19079 of August 31, 2012 (77 FR 53258), there were a number of technical errors that are identified and corrected in the Correction of Errors section of this correcting document. The provisions in this correcting document are effective as if they had been included in the final rule appearing in the August 31, 2012 **Federal Register**. Accordingly, the corrections are effective October 1, 2012.

II. Summary of Errors and Corrections Posted on the CMS Web Site

A. Errors in the Preamble

On page 53268, in our summary of the provisions of the Hospital Inpatient Quality Reporting (IQR) Program, we inadvertently referenced hospital-acquired condition (HAC) measure sets

instead of healthcare-associated infection (HAI) measures sets. Also on this page, in our discussion of the cost and benefits of the Hospital Readmission Reduction Program, we made a technical error in the dollar amount by which the Hospital Readmission Reduction Program will reduce payments to hospitals.

On page 53278, we made an inadvertent typographical error in the discussion of prospective adjustments for FY 2010 documentation and coding effect.

On page 53315, in our discussion of International Classification of Disease, Ninth Revisions, Clinical Modification (ICD–9–CM), we inadvertently reference ICD–9–CM coding system instead of ICD–9–CM diagnosis codes.

On pages 53386 and 53392, we made typographical errors in our summation of a public comment regarding the Hospital Readmission Reduction Program.

On page 53387, we are correcting the Web site for obtaining the MedPAR files referenced in our discussion of aggregate payments for excess readmissions and aggregate payments for all discharges under the Hospital Readmission Reduction Program.

On page 53485, in our discussion of long-term care hospital (LTCH) moratorium on the 25-percent payment adjustment threshold policy, we made typographical errors in an example.

On page 53508, we made a grammatical error in our discussion of the Agency for Healthcare Research and Quality (AHRQ) indicators.

On page 53545, in our discussion of validation approaches for the Hospital IQR Program, we made a typographical error.

On page 53557, in our discussion of CDC/NHSN-based HAI measures for the PPS-Exempt Cancer Hospital Quality Reporting Program (PCHQR), we made a grammatical error.

On page 53601, in the table regarding the final performance standards for the FY 2015 Hospital Value-Base Purchasing (HVBP) Program, we inadvertently omitted a clinical process of care measure.

On page 53648, in our discussion of hospital-based inpatient psychiatric service (HBIPS) under the IPFQR Program, we made a typographical error.

On page 53655, in our discussion of the reporting and submission requirements for 2014 IPFQR payment determinations, we inadvertently made technical and typographical errors in a response to a public comment.

On page 53668, in our discussion of the information collection requirements for the LTCH Quality Reporting Program, we made two technical errors in describing the number of hospitals that report data to the National Health Safety Network (NHSN).

On page 53669, in our discussion of the information collection requirements for the LTCH Quality Reporting Program, we made a grammatical error in our response to a comment regarding the cost associated with reported pressure ulcer data.

B. Errors in the Addendum

On page 53706, in the table titled ''Comparison of Factors and Adjustments: FY 2012 Capital Federal Rate and FY 2013 Capital Federal Rate,'' there was a typographical error in the GAF/DRG Adjustment Factor shown for FY 2012.

On page 53731, we made a technical error in the number and hospitals that we estimate will have their base operating payments reduced by readmission reduction program.

C. Summary of Errors in and Corrections to Tables Posted on the CMS Web site

On pages 53717, we list the tables that are tables available only through the Internet. We are correcting the following errors in Tables 9A, 9C, and 15:

In Table 9A.—Hospital Reclassifications and Redesignations—FY 2013, Provider 010164 was inadvertently omitted.

In Table 9C.—Hospitals Redesignated as Rural under Section 1886(d)(8)(E) of the Act—FY 2013, Provider 040118 was mistakenly listed as a section 401 provider and will be removed. Provider 290009 was inadvertently omitted and will be listed as a rural reclassification from CBSA 39900 to CBSA 29.

In addition, we note that the correction of errors for Tables 9A and 9C require us to make conforming changes to Tables 2, 4A, 4B, 4C, and 4J, respectively.

In Table 15.—FY 2013 Final Readmissions Adjustment Factors, we inadvertently included Medicare inpatient claims from the FY 2008 MedPAR file with discharge dates occurring prior to July 1, 2008 in determining the base operating DRG payment amounts in the calculation of aggregate payments for excess readmissions and aggregate payments for all discharges that were used to calculate the readmissions adjustment factors published for the FY 2013 IPPS/LTCH final rule. Under the policy we adopted in that final rule, for FY 2013, aggregate payments for excess readmissions and aggregate payments for all discharges are calculated using data from Medicare inpatient MedPAR claims with discharge dates occurring on or after July 1, 2008, and no later than June 30, 2011.

III. Waiver of Proposed Rulemaking and Delay in the Effective Date

We ordinarily publish a notice of proposed rulemaking in the **Federal Register** to provide a period for public comment before the provisions of a rule take effect in accordance with section 553(b) of the Administrative Procedure Act (APA) (5 U.S.C. 553(b)). However, we can waive this notice and comment procedure if the Secretary finds, for good cause, that the notice and comment process is impracticable, unnecessary, or contrary to the public interest, and incorporates a statement of the finding and the reasons therefore in the notice.

Section 553(d) of the APA ordinarily requires a 30-day delay in effective date of final rules after the date of their publication in the **Federal Register**. This 30-day delay in effective date can be waived, however, if an agency finds for good cause that the delay is impracticable, unnecessary, or contrary to the public interest, and the agency incorporates a statement of the findings and its reasons in the rule issued.

In our view, this correcting document does not constitute a rule that would be subject to the APA notice and comment or delayed effective date requirements. This correcting document corrects technical errors and typographical errors in the preamble, regulations text, tables included in the Addendum of the FY 2013 IPPS/LTCH PPS final rule, and tables posted on the CMS Web site but does not make substantive changes to the policies or payment methodologies that were adopted in the final rule. As a result, this correcting document is intended to ensure that the preamble, regulations text, tables included in the Addendum of the FY 2013 IPPS/LTCH PPS final rule, and tables posted on the CMS Web site accurately reflect the policies adopted in that final rule.

In addition, even if this were a rule to which the notice and comment and delayed effective date requirements applied, we find that there is good cause to waive such requirements. Undertaking further notice and comment procedures to incorporate the corrections in this document into the final rule or delaying the effective date would be contrary to the public interest. Furthermore, such procedures would be unnecessary, as we are not altering the policies that were already subject to comment and finalized in our final rule. Therefore, we believe we have good cause to waive the notice and comment and effective date requirements.

IV. Correction of Errors

In FR Doc. 2012–19079 of August 31, 2012 (77 FR 53258), make the following corrections:

A. Corrections of Errors in the Preamble

1. On page 53268,

a. First column, first partial paragraph, line 10, the phrase ''HAC measures sets'' is corrected to read ''HAI measures sets''.

b. Third column, last paragraph, second line from the bottom, the figure ''$280'' is corrected to read ''$290''.

2. On page 53278, third column, first partial paragraph, line 32, the phrase ''in FY 2010.'' is correct to read ''in FY 2013.''.

3. On page 53315, third column, last paragraph, line 4, the phrase ''the ICD–9–CM coding system'' is corrected to read ''the ICD–9–CM diagnosis codes''.

4. On page 53386, third column, third paragraph, line 7, the phrase ''for applicable conditions.'' is deleted.

5. On page 53387, third column, second paragraph, lines 37 and 38, the Web site ''*http://www.cms.hhs.gov/LimitedDataSets/*'' is corrected to read ''*http://www.cms.gov/Research-Statistics-Data-and-Systems/Files-for-Order/LimitedDataSets/index.html*''.

6. On page 53392, lower half of the page, first column, first paragraph—

a. Line 10, the phrase ''all discharges for applicable conditions'' is corrected to read ''all discharges''.

b. Lines 12 and 13, the phrase ''all discharges for applicable conditions.'' is corrected to read ''all discharges.''.

7. On page 53485, second column, first partial paragraph—

a. Line 26, the phrase ''IPPS Hospital A'' is corrected to read ''IPPS Hospital B''.

b. Line 29, the phrase ''LTCH B'' is corrected to read ''LTCH A''.

c. Line 31, the phrase ''§ 412.536(a)(3)(1)'' is corrected to read ''§ 412.536(a)(3)(i)''.

8. On page 53508, second column, last paragraph, line 1, the phrase ''We wish to clarify'' is corrected to read ''We are clarifying''.

9. On page 53545, second column, first partial paragraph, line 5, the bracketed phrase ''[or catheter?]'' is corrected to read ''or catheter''.

10. On page 53557, second column, first full paragraph, line 2, the phrase ''with other our'' is corrected to read ''with our other''.

11. On page 53601, bottom of the page, the table entitled ''FINAL PERFORMANCE STANDARDS FOR THE FY 2015 HOSPITAL VBP PROGRAM CLINICAL PROCESS OF CARE, OUTCOME, AND EFFICIENCY DOMAINS,'' the listed entry is added after Measure ID AMI–8a to read as follows:

CLINICAL PROCESS OF CARE MEASURES

Measure ID	Description	Achievement threshold	Benchmark
HF–1	Discharge Instructions	0.94118	1.00000

12. On page 53648, first column, first full paragraph, lines 9 and 10, the phrase ''physical restraint (HBIPS–2) use'' is corrected to ''physical restraint use''

13. On page 53655, third column, second paragraph, lines 6 and 7, the phrase ''behavioral services in the IPF settings'' is corrected to read ''behavioral health services in the IPF setting.''

14. On page 53668,

a. Second column, second full paragraph, line 9, the phrase ''over 200'' is corrected to read ''upwards of 300''.

b. Third column, first partial paragraph, lines 17 and 18, the phrase ''321 LTCHs'' is corrected to read ''upwards of 300 LTCHs''.

15. On page 53669, third column, first full paragraph, lines 9 through 11, the phrase ''to comply with the reporting pressure ulcer data.'' is corrected to read ''to report pressure ulcer data.''.

B. Corrections of Errors in the Addendum

1. On page 53706, middle of the page, the table entitled, ''COMPARISON OF FACTORS AND ADJUSTMENTS: FY 2012 CAPITAL FEDERAL RATE AND FY 2013 CAPITAL FEDERAL RATE,'' listed entry is corrected to read as follows:

	FY 2012	FY 2013	Change	Percent change
GAF/DRG Adjustment Factor [1]	1.0004	0.9998	0.9998	−0.02

[1] The update factor and the GAF/DRG budget neutrality adjustment factors are built permanently into the capital Federal rates. Thus, for example, the incremental change from FY 2012 to FY 2013 resulting from the application of the 0.9998 GAF/DRG budget neutrality adjustment factor for FY 2013 is a net change of 0.9998 (or −0.02 percent).

2. On page 53731, first column, first paragraph, line 28, the figure ''2,206'' is corrected to read ''2,217''.

(Catalog of Federal Domestic Assistance Program No. 93.773, Medicare—Hospital Insurance; and Program No. 93.774, Medicare—Supplementary Medical Insurance Program)

Dated: September 27, 2012.

Oliver Potts,

Deputy Executive Secretary to the Department, Department of Health and Human Services.

[FR Doc. 2012–24307 Filed 9–28–12; 4:15 pm]

BILLING CODE 4120–01–P

DEPARTMENT OF TRANSPORTATION

Office of the Secretary

49 CFR Part 40

[Docket DOT–OST–2010–0026]

RIN 2105–AE14

Procedures for Transportation Workplace Drug and Alcohol Testing Programs: 6-acetylmorphine (6-AM) Testing

AGENCY: Office of the Secretary, U.S. Department of Transportation (DOT).

ACTION: Final rule.

SUMMARY: This rule adopts as final, without change, a May 4, 2012, interim final rule (IFR) which no longer requires laboratories and Medical Review Officers (MRO) to consult with one another regarding the testing for the presence of morphine when the laboratory confirms the presence of 6-acetylmorphine (6-AM). Also, laboratories and MROs will no longer need to report 6-AM results to the Office of Drug and Alcohol Policy and Compliance (ODAPC). This rule also responds to comments on the IFR.

DATES: The rule is effective October 3, 2012.

FOR FURTHER INFORMATION CONTACT: Bohdan Baczara, U.S. Department of Transportation, Office of Drug and Alcohol Policy and Compliance, 1200 New Jersey Avenue SE., Washington, DC 20590; 202–366–3784 (voice), 202–366–3897 (fax), or *bohdan.baczara@dot.gov* (email).

SUPPLEMENTARY INFORMATION:

Background and Purpose

On August 16, 2010, [75 FR 49850] the Department published its final rule to harmonize with many aspects of the revised Department of Health and Human Services (HHS) Mandatory Guidelines [73 FR 71858]. One item with which the DOT harmonized was the laboratory testing for 6-acetylmorphine (6-AM) without a morphine marker. 6-AM is a unique metabolite produced when a person uses the illicit drug heroin. Prior to the October 1, 2010, rulemaking, both the HHS and Department of Transportation (DOT) regulations required the laboratory to first test for morphine, and if it detected morphine at the HHS/DOT cutoff of 2000ng/mL, the lab would then test for 6-AM.

For the reasons discussed in the DOT final rule [75 FR 49850], we decided that, until more experience was gained with the new testing procedures for 6-AM, we would place additional requirements on laboratories and MROs. Specifically, when there was a 6-AM positive result and morphine was not detected by a laboratory at the 2000ng/mL cutoff, we added a requirement for the laboratory and MRO to determine whether morphine was detected at the laboratory's level of detection (LOD). If morphine was not detected at the laboratory's LOD, the laboratory and MRO were to report that result to DOT's Office of Drug and Alcohol Policy and Compliance (ODAPC). After consulting with ODAPC, the MRO would make a verified result determination, keeping in mind that there is no legitimate explanation for 6-AM in the employee's specimen [see § 40.151(g)]. The Department would track these results and discuss them with HHS.

On May 4, 2012, the Department issued an IFR [77 FR 26471] and effective July 3, 2012, related to 6-AM testing. For reasons stated in that IFR, we removed the requirement for laboratories and MROs to consult with one another regarding the testing for the presence of 6-AM. The IFR also streamlined the laboratory analysis and MRO reporting of 6-AM results by not having either the laboratory or MRO report the 6-AM information to ODAPC. The IFR also sought comments to the IFR which were to be submitted by June 4, 2012. There were two such comments.

Discussion of Comments to the Docket

There were two comments to the docket representing three organizations. One comment was submitted by a large organization which represents physicians who are MROs. The other comment was submitted by a large medical review officer service and consortium which provide drug and alcohol testing services primarily to the pipeline industry.

Each of the commentors fully supported the Department's position on amending the requirements for testing and reporting 6-AM test results. Their support of the IFR further reinforces that there are no legitimate medical explanations for the confirmation of 6-AM on a DOT drug test and that the MRO must make positive results determinations in these cases.

One commenter asked whether we had noted a spike followed by a decline in the 6-AM results during the first year of testing, as they did. They wondered whether our commissioned study was designed to shed light on their observation.

We would note that over time, the Department has indeed seen an increase of laboratory-reported 6-AM test results. However, we found that the largest semi-annual period rise of 6-AM results, by number and percentage increase, came even before the October 2010 effective date of the new rules. This larger rise was noted when we compared the July–December 2009 period with the January–June 2010 period. Also, it is important to note that the number of total drug tests reported by laboratories has risen during each 6-month period, starting with the July–December 2009 period, and the number of 6-AM positive results has steadily risen each period since July–December 2008.

The following table displays the laboratory data for 6-AM before, during transition, and after full implementation of the new testing protocols:

Semi-Annual period	2008 July–Dec	2009 Jan–June	2009 July–Dec	2010 Jan–June	2010* July–Dec	2011 Jan–June	2011 July–Dec
Total Laboratory Test Results.	2.85 million ...	2.59 million ...	2.57 million ...	2.69 million ...	2.77 million ...	2.82 million ...	2.87 million
6-AM Laboratory Positives ..	121	158	173	281	298	371	429

*The new requirement for 6-AM testing was in effect for the last 3 months of the period.

Our commissioned study was not designed to evaluate the pattern of 6-AM test results over time. Its scope was ''* * * to verify the atypical results obtained by the laboratories, to determine if other drug or metabolites present in the specimens could explain the absence of morphine, and to determine if something other than heroin use could explain the presence of 6-AM.'' [77 FR 26472] The study's findings were presented and discussed in the IFR. [77 FR 26472] We would note that the rise in 6-AM positives was predicted, and a rise seems to have become the trend over time.

For the reasons discussed above and outlined in the IFR, we are adopting the rule text in the IFR as final.

Regulatory Analyses and Notices

Authority

The statutory authority for this rule derives from the Omnibus Transportation Employee Testing Act of 1991 (49 U.S.C. 102, 301, 322, 5331, 20140, 31306, and 54101 et seq.) and the Department of Transportation Act (49 U.S.C. 322).

Executive Order 12866 and Regulatory Flexibility Act

This Final Rule is not significant for purposes of Executive Order 12866 or the DOT's regulatory policies and procedures. It finalizes modifications, already in effect, to our procedures that do not increase costs on regulated parties. The rule will impose no new burdens on any parties, and will actually decrease the burden upon the laboratories and the MROs. I hereby certify, under the Regulatory Flexibility Act, that this rule does not have a significant economic impact on a substantial number of small entities.

List of Subjects in 49 CFR Part 40

Administrative practice and procedures, Alcohol abuse, Alcohol testing, Drug abuse, Drug testing, Laboratories, Reporting and recordkeeping requirements, Safety, Transportation.

Accordingly, the Interim Final Rule amending 49 CFR Part 40 which was published at 77 FR 26471 on May 4, 2012 is adopted as a final rule without change.

Issued on September 20th, 2012, at Washington DC

Ray LaHood,

Secretary of Transportation.

[FR Doc. 2012–24337 Filed 10–2–12; 8:45 am]

BILLING CODE 4910–9X–P

DEPARTMENT OF COMMERCE

National Oceanic and Atmospheric Administration

50 CFR Part 229

RIN 0648–XC099

Harbor Porpoise Take Reduction Plan; Coastal Gulf of Maine Closure Area Established With a Temporary Shift of Its Effective Date

AGENCY: National Marine Fisheries Service (NMFS), National Oceanic and Atmospheric Administration (NOAA), Commerce.

ACTION: Establishment of the Coastal Gulf of Maine Closure Area; temporary shift of its effective date.

SUMMARY: Through this notice, NOAA's National Marine Fisheries Service (NMFS) announces the establishment of the Coastal Gulf of Maine Closure Area under the Harbor Porpoise Take Reduction Plan (Plan), and temporarily shifts the effective date of year 1 of its implementation from October 1, 2012, to February 1, 2013. Recent information suggests that harbor porpoise bycatch is higher in February and March than in October and November since the implementation of sectors in May 2010, warranting a temporary shift of the closure in year 1 to a time period that would provide greater conservation benefit to harbor porpoises and allow time for more complete consideration of updated information on harbor porpoise bycatch, harbor porpoise abundance, and fishing effort by the Harbor Porpoise Take Reduction Team (Team). As such, this area will be closed to gillnet fishing in February and March of 2013 rather than October and November of 2012.

DATES: Year 1 effective February 1, 2013; Year 2 and beyond effective October 1, 2013.

FOR FURTHER INFORMATION CONTACT: Kate Swails, NMFS, Northeast Region, 978–282–8481, *kate.swails@noaa.gov;* or Kristy Long, NMFS, Office of Protected Resources, 301–427–8402, *kristy.long@noaa.gov*.

SUPPLEMENTARY INFORMATION:

Background

The Harbor Porpoise Take Reduction Plan (Plan) was implemented in late 1998 pursuant to section 118(f) of the Marine Mammal Protection Act (MMPA) to reduce the level of serious injury and mortality of the Gulf of Maine/Bay of Fundy (GOM/BOF) stock of harbor porpoises (63 FR 66464, December 2, 1998). NMFS amended the Plan in 2010 (75 FR 7383, February 19, 2010) to address increased mortalities of harbor porpoises in New England and Mid-Atlantic commercial gillnet fisheries due to non-compliance with the Plan requirements and observed interactions occurring outside of existing management areas.

The 2010 amendments, based largely on consensus recommendations from the Team, included the expansion of seasonal and temporal requirements within the Plan's management areas, the incorporation of additional management areas, and the creation of three closure areas off the coast of New England that would prohibit the use of gillnet gear if certain levels of harbor porpoise bycatch are exceeded (consequence closure area strategy).

For New England, the 2010 amendments to the Plan implemented a ''consequence'' closure strategy, which would close specific areas to gillnet gear during certain times of the year if observed average bycatch rates exceed specified target bycatch rates over the course of two consecutive management seasons. If observed bycatch rates exceeded the target rates, the following three areas would become closed: the Coastal Gulf of Maine, Eastern Cape Cod, and Cape Cod South Expansion Consequence Closure Areas. This measure was intended to provide an incentive for the gillnet industry to comply with pinger requirements in areas with historically high harbor porpoise bycatch levels resulting from relatively low levels of compliance. The consequence closures, if implemented, would further reduce harbor porpoise mortalities due to the times and areas chosen for their implementation.

The Coastal Gulf of Maine Consequence Closure would be triggered if the observed average bycatch rates of harbor porpoises in the Mid-Coast, Stellwagen Bank, and Massachusetts Bay Management Areas (combined) exceed the target bycatch rate of 0.031 harbor porpoise takes/metric tons of fish landed (takes/mtons) (1 harbor porpoise taken per 71,117 pounds of fish landed) after two consecutive management seasons. If triggered, the use of gillnet gear would be prohibited during the months of October and November, which historically have been the months with the highest amount of observed harbor porpoise bycatch. When this area is not closed, the seasonal requirements of the three overlapping management areas, including the March gillnet closure in the Massachusetts Bay Management Area, would remain in effect.

The Cape Cod South Expansion and Eastern Cape Cod Consequence Closures

would be triggered if the observed average bycatch rate of harbor porpoises in the Southern New England Management Area exceeded the target bycatch rate of 0.023 takes/mtons (1 harbor porpoise taken per 95,853 pounds of fish landed) after two consecutive management seasons. If triggered, both areas would prohibit the use of gillnet gear annually from February 1 through April 30. When the consequence closure areas are not closed, the seasonal pinger requirements of the overlapping Southern New England Management Area would remain in effect.

Consequence closure area monitoring began with the start of first full management season after implementation of the 2010 amendments. The first monitoring season occurred from September 15, 2010 through May 31, 2011, and the second occurred from September 15, 2011 through May 31, 2012.

The two-year average observed harbor porpoise bycatch rate for the areas associated with the Coastal Gulf of Maine Consequence Closure Area is 0.057 takes/mtons (Orphanides, 2012). This is above the target bycatch rate (0.031 takes/mtons), triggering the implementation of the Coastal Gulf of Maine Closure Area (Figure 1).

Figure 1. Coastal Gulf of Maine Closure Area.

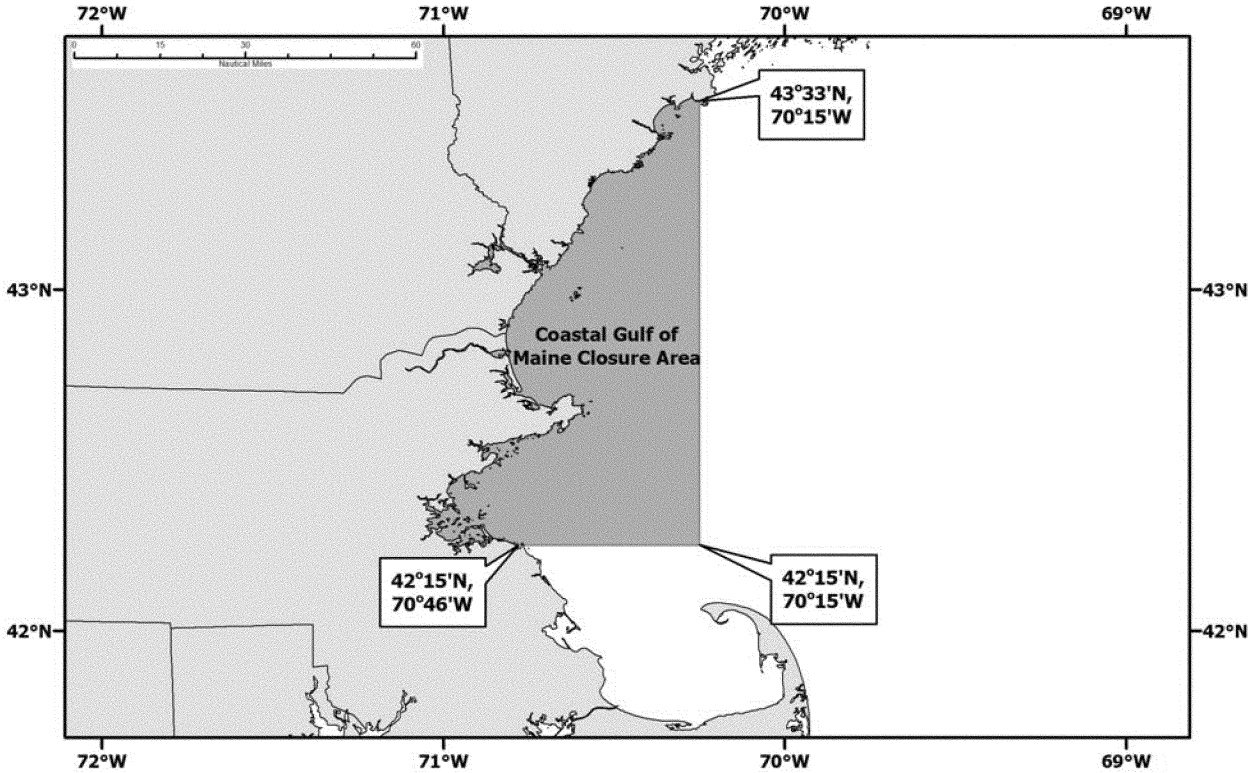

The two-year average observed harbor porpoise bycatch rate in the Southern New England Management Area is 0.020 takes/mtons (Orphanides, 2012), indicating that the two-year average does not exceed the target bycatch rate (0.023 takes/mtons).

Temporary Shift of the Coastal Gulf of Maine Closure Area Effective Date

In April 2012, NMFS sent letters to gillnet fishermen notifying them that NMFS planned to implement the Coastal Gulf of Maine Closure Area beginning October 1, 2012. Following this notification, in August 2012, NMFS received a letter from a fishing industry representative requesting that the agency review harbor porpoise bycatch and fishing effort information in the coastal Gulf of Maine area after the 2010 implementation of the amendments to the Plan, and New England Multispecies Fishery Management Plan Amendment 16, which implemented sector management and greatly modified the way New England groundfish fishermen could fish. The letter specifically requested that the timing of the closure be shifted from October and November to mid-February through March, and that the area be modified to be slightly smaller. This request highlighted a conservation benefit to harbor porpoises that would occur by shifting the timing, as well as an economic benefit for the fishing industry by allowing them to fish in the area during October and November. In considering this request, NMFS examined available harbor porpoise bycatch and fishing information from 2010 through 2012. Within the boundaries of the Coastal Gulf of Maine Closure Area, harbor porpoise bycatch data indicated that a higher number of observed takes occurred during the spring, particularly in February and March, than in the fall (October and November), equating to a higher estimated total bycatch in the spring. Additionally, the bycatch rate during the spring was higher than in the fall.

Since the implementation of groundfish sectors in May 2010, it is possible that fishing effort distribution has shifted, thus affecting the distribution and timing of harbor porpoise bycatch. Alternatively, this change may reflect a shift in harbor porpoise distribution. However, this information has not yet been fully analyzed.

According to 50 CFR 229.33(f)(2), the Assistant Administrator for Fisheries may revise the requirements of the Plan through notification published in the **Federal Register** if NMFS determines that the boundaries or timing of a closed area is inappropriate. After consideration of this recent information, NMFS will temporarily shift the implementation of year 1 of the Coastal Gulf of Maine Closure Area from October 1, 2012 through November 30, 2012, to February 1, 2013 through March 31, 2013. This temporary shift will be for year 1 only, and will include the entire Coastal Gulf of Maine Closure Area as identified in the regulations for the full two-month time period. This temporary shift of the closure will provide greater conservation benefits to harbor porpoises. During October, the Team will convene to consider data generated since the last Team meeting in late 2007. New information includes: new harbor porpoise abundance estimates, the most recent harbor porpoise bycatch information that indicates that harbor porpoise bycatch is exceeding allowable levels under the MMPA, and fishing effort and distribution information within the consequence closure area boundaries as well as throughout the entire range of the Plan. The Team will also assess how the implementation of groundfish sectors has affected gillnet effort and distribution and any related effects on harbor porpoise bycatch. This information will allow the Team to develop a comprehensive management strategy to further reduce the bycatch of harbor porpoises to acceptable levels under the MMPA. After year 1, the closure area timing will revert to October and November, pending the implementation of revised conservation measures resulting from the Team's deliberations this fall.

Despite the shift in the timing of the Coastal Gulf of Maine Closure to February and March of 2013, NMFS stresses the importance of fully complying with the Plan's pinger requirements (i.e., proper number of fully functional pingers present on each net string) to reduce harbor porpoise bycatch. Pingers are still required on gillnet fishing gear in the Mid-Coast Management Area from September 15 through May 31 and the Massachusetts Bay and Stellwagen Bank Management Areas from November 1 through May 31. Additionally, the entire Massachusetts Bay Management Area is closed during March.

References

Orphanides C.D. 2012. New England harbor porpoise bycatch rates during 2010–2012 associated with Consequence Closure Areas. US Dept. of Commerce, Northeast Fisheries Science Center Reference Doc 12–19; 15 pp.

Dated: September 27, 2012.

Samuel D. Rauch III,

Deputy Assistant Administrator for Regulatory Programs, performing the functions and duties of the, Assistant Administrator for Fisheries, National Marine Fisheries Service.

[FR Doc. 2012–24410 Filed 9–28–12; 4:15 pm]

BILLING CODE 3510–22–P

DEPARTMENT OF COMMERCE

National Oceanic and Atmospheric Administration

50 CFR Part 679

[Docket No. 111207737–2141–02]

RIN 0648–XC270

Fisheries of the Exclusive Economic Zone Off Alaska; Pollock in Statistical Area 620 in the Gulf of Alaska

AGENCY: National Marine Fisheries Service (NMFS), National Oceanic and Atmospheric Administration (NOAA), Commerce.

ACTION: Temporary rule; closure.

SUMMARY: NMFS is prohibiting directed fishing for pollock in Statistical Area 620 in the Gulf of Alaska (GOA). This action is necessary to prevent exceeding the 2012 total allowable catch of pollock for Statistical Area 620 in the GOA.

DATES: Effective 1200 hrs, Alaska local time (A.l.t.), October 1, 2012, through 2400 hrs, A.l.t., December 31, 2012. Comments must be received at the following address no later than 4:30 p.m., A.l.t., October 15, 2012.

ADDRESSES: You may submit comments, identified by NOAA–NMFS–2012–0187, by any one of the following methods:

- *Electronic Submission:* Submit all electronic public comments via the Federal e-Rulemaking Portal *www.regulations.gov.* To submit comments via the e-Rulemaking Portal, first click the ''submit a comment'' icon, then enter NOAA–NMFS–2012–0187 in the keyword search. Locate the document you wish to comment on from the resulting list and click on the ''Submit a Comment'' icon on that line.
- *Mail:* Address written comments to Glenn Merrill, Assistant Regional Administrator, Sustainable Fisheries Division, Alaska Region NMFS, Attn: Ellen Sebastian. Mail comments to P.O. Box 21668, Juneau, AK 99802–1668.
- *Fax:* Address written comments to Glenn Merrill, Assistant Regional Administrator, Sustainable Fisheries Division, Alaska Region NMFS, Attn: Ellen Sebastian. Fax comments to 907–586–7557.
- *Hand delivery to the Federal Building:* Address written comments to Glenn Merrill, Assistant Regional Administrator, Sustainable Fisheries Division, Alaska Region NMFS, Attn: Ellen Sebastian. Deliver comments to 709 West 9th Street, Room 420A, Juneau, AK.

Instructions: Comments must be submitted by one of the above methods to ensure that the comments are received, documented, and considered by NMFS. Comments sent by any other method, to any other address or individual, or received after the end of the comment period, may not be considered. All comments received are a part of the public record and will generally be posted for public viewing on *www.regulations.gov* without change. All personal identifying information (e.g., name, address) submitted voluntarily by the sender will be publicly accessible. Do not submit confidential business information, or otherwise sensitive or protected information. NMFS will accept anonymous comments (enter ''N/A'' in the required fields if you wish to remain anonymous). Attachments to electronic comments will be accepted in Microsoft Word or Excel, WordPerfect, or Adobe PDF file formats only.

FOR FURTHER INFORMATION CONTACT: Obren Davis, 907–586–7228.

SUPPLEMENTARY INFORMATION: NMFS manages the groundfish fishery in the GOA exclusive economic zone according to the Fishery Management Plan for Groundfish of the Gulf of Alaska (FMP) prepared by the North Pacific Fishery Management Council under authority of the Magnuson-Stevens Fishery Conservation and Management Act. Regulations governing fishing by U.S. vessels in accordance with the FMP appear at subpart H of 50 CFR part 600 and 50 CFR part 679.

The 2012 total allowable catch (TAC) of pollock in Statistical Area 620 of the GOA is 45,808 metric tons (mt) as established by the final 2012 and 2013 harvest specifications for groundfish of the GOA (77 FR 15194, March 14, 2012).

As of September 27, 2012, approximately 5,200 mt of pollock remain in the 2012 TAC for pollock in Statistical Area 620 of the GOA. Based on fleet capacity and potentially high levels of fleet participation in this fishery, the Administrator, Alaska Region (Regional Administrator) has determined that the pollock TAC for Statistical Area 620 of the GOA could be

exceeded if a fishery were allowed to occur. NMFS, in accordance with § 679.25(a)(1)(i), § 679.25(a)(2)(i)(A), and § 679.25(a)(2)(iii)(B) is issuing an inseason adjustment prohibiting directed fishing for pollock in Statistical Area 620 of the GOA. The Regional Administrator has determined that this action is the least restrictive necessary to ensure that the TAC not be exceeded.

After the effective date of this closure the maximum retainable amounts at § 679.20(e) and (f) apply at any time during a trip.

Classification

This action responds to the best available information recently obtained from the fishery. The Acting Assistant Administrator for Fisheries, NOAA (AA), finds good cause to waive the requirement to provide prior notice and opportunity for public comment pursuant to the authority set forth at 5 U.S.C. 553(b)(B) and § 679.25(c)(1)(ii) as such requirement is impracticable and contrary to the public interest. This requirement is impracticable and contrary to the public interest as it would prevent NMFS from responding to the most recent fisheries data in a timely fashion and would delay the closure of directed fishing for pollock in Statistical Area 620 of the GOA. NMFS was unable to publish a notice providing time for public comment because the most recent, relevant data only became available as of September 27, 2012.

The AA also finds good cause to waive the 30-day delay in the effective date of this action under 5 U.S.C. 553(d)(3). This finding is based upon the reasons provided above for waiver of prior notice and opportunity for public comment.

This action is required by § 679.20 and is exempt from review under Executive Order 12866.

Authority: 16 U.S.C. 1801 *et seq.*

Dated: September 28, 2012.

Lindsay Fullenkamp,

Acting Deputy Director, Office of Sustainable Fisheries, National Marine Fisheries Service.

[FR Doc. 2012–24400 Filed 9–28–12; 4:15 pm]

BILLING CODE 3510–22–P

Proposed Rules

Federal Register
Vol. 77, No. 192
Wednesday, October 3, 2012

This section of the FEDERAL REGISTER contains notices to the public of the proposed issuance of rules and regulations. The purpose of these notices is to give interested persons an opportunity to participate in the rule making prior to the adoption of the final rules.

DEPARTMENT OF TRANSPORTATION

Federal Aviation Administration

14 CFR Part 39

[Docket No. FAA–2012–1037; Directorate Identifier 2012–NM–008–AD]

RIN 2120–AA64

Airworthiness Directives; DASSUALT AVIATION Airplanes

AGENCY: Federal Aviation Administration (FAA), DOT.

ACTION: Notice of proposed rulemaking (NPRM).

SUMMARY: We propose to adopt a new airworthiness directive (AD) for all DASSAULT AVIATION Model MYSTERE–FALCON 50 airplanes. This proposed AD was prompted by a manufacturer revision to the airplane maintenance manual (AMM) that introduces new or more restrictive maintenance requirements and airworthiness limitations. This proposed AD would revise the maintenance program to incorporate new or revised maintenance requirements and airworthiness limitations. We are proposing this AD to prevent reduced structural integrity of the airplane.

DATES: We must receive comments on this proposed AD by November 19, 2012.

ADDRESSES: You may send comments by any of the following methods:

- *Federal eRulemaking Portal:* Go to *http://www.regulations.gov*. Follow the instructions for submitting comments.
- *Fax:* (202) 493–2251.
- *Mail:* U.S. Department of Transportation, Docket Operations, M–30, West Building Ground Floor, Room W12–140, 1200 New Jersey Avenue SE., Washington, DC 20590.
- *Hand Delivery:* U.S. Department of Transportation, Docket Operations, M–30, West Building Ground Floor, Room W12–140, 1200 New Jersey Avenue SE., Washington, DC, between 9 a.m. and 5 p.m., Monday through Friday, except Federal holidays.

For service information identified in this proposed AD, contact Dassault Falcon Jet, P.O. Box 2000, South Hackensack, New Jersey 07606; telephone 201–440–6700; Internet *http://www.dassaultfalcon.com*. You may review copies of the referenced service information at the FAA, Transport Airplane Directorate, 1601 Lind Avenue SW., Renton, WA. For information on the availability of this material at the FAA, call 425–227–1221.

Examining the AD Docket

You may examine the AD docket on the Internet at *http://www.regulations.gov;* or in person at the Docket Operations office between 9 a.m. and 5 p.m., Monday through Friday, except Federal holidays. The AD docket contains this proposed AD, the regulatory evaluation, any comments received, and other information. The street address for the Docket Operations office (telephone (800) 647–5527) is in the **ADDRESSES** section. Comments will be available in the AD docket shortly after receipt.

FOR FURTHER INFORMATION CONTACT: Tom Rodriguez, Aerospace Engineer, International Branch, ANM–116, Transport Airplane Directorate, FAA, 1601 Lind Avenue SW., Renton, WA 98057–3356; telephone (425) 227–1137; fax (425) 227–1149.

SUPPLEMENTARY INFORMATION:

Comments Invited

We invite you to send any written relevant data, views, or arguments about this proposed AD. Send your comments to an address listed under the **ADDRESSES** section. Include ''Docket No. FAA–2012–1037; Directorate Identifier 2012–NM–008–AD'' at the beginning of your comments. We specifically invite comments on the overall regulatory, economic, environmental, and energy aspects of this proposed AD. We will consider all comments received by the closing date and may amend this proposed AD based on those comments.

We will post all comments we receive, without change, to *http://www.regulations.gov,* including any personal information you provide. We will also post a report summarizing each substantive verbal contact we receive about this proposed AD.

Discussion

The European Aviation Safety Agency (EASA), which is the Technical Agent for the Member States of the European Community, has issued EASA Airworthiness Directive 2011–0246, dated December 22, 2011 (referred to after this as ''the MCAI''), to correct an unsafe condition for the specified products. The MCAI states:

> The airworthiness limitations and maintenance requirements for the Mystère-Falcon 50 (MF50) type design are included in Dassault Aviation Mystère-Falcon 50 Aircraft Maintenance Manual (AMM) chapter 5–40 and approved by the European Aviation Safety Agency (EASA). EASA issued AD 2008–0221 to require accomplishment of the maintenance tasks and implementation of the airworthiness limitations, as specified in Dassault Aviation MF50 AMM chapter 5–40 at revision 17.
>
> Since that [EASA] AD was issued, Dassault Aviation issued MF50 AMM chapter 5–40 at revision 21, which introduces new or more restrictive maintenance requirements and/or airworthiness limitations.
>
> Dassault Aviation AMM chapter 5–40 revision 21 contains among other changes the following requirements:
>
> —Corrosion Prevention and Control Programme (CPCP). Compliance with this programme was required by DGAC [Direction Générale de l'Aviation Civile] France AD F–2004–162 (EASA approval number 2004–10117). A new CPCP approach is now introduced in MF50 AMM chapter 5–40 at revision 21;
>
> —Check of overpressure tightness on pressurization control regulating valves. Compliance with this check is required by EASA AD 2008–0072 [which corresponds to FAA AD 2010–26–05, Amendment 39–16544 (75 FR 79952, December 21, 2010]. MF50 AMM chapter 5–40 at revision 21 introduces extended inspection interval;
>
> —Non destructive check of the flap tracks 2 and 5. Compliance with this check is required by EASA AD 2010–0080.
>
> The maintenance tasks and airworthiness limitations, as specified in the MF50 AMM chapter 5–40, have been identified as mandatory actions for continued airworthiness of the MF50 type design. Failure to comply with AMM chapter 5–40 at revision 21 might constitute an unsafe condition [which could result in reduced structural integrity of the airplane].
>
> For the reasons described above, this [EASA] AD, which supersedes DGAC France AD F–2004–162, requires the implementation of the maintenance tasks and airworthiness limitations, as specified in Dassault Aviation MF50 AMM chapter 5–40 at revision 21.

The required action is revising the maintenance program to incorporate all

airworthiness limitations and maintenance tasks specified in Section 05–40/00, Airworthiness Limitations, of Chapter 5–40, Airworthiness Limitations, of the Dassault Falcon 50/50EX Maintenance Manual, Revision 21, dated June 21, 2011. You may obtain further information by examining the MCAI in the AD docket.

Relevant Service Information

Dassault has issued Section 05–40/00, Airworthiness Limitations, of Chapter 5–40, Airworthiness Limitations, of the Dassault Falcon 50/50EX Maintenance Manual, Revision 21, dated June 21, 2011. The actions described in this service information are intended to correct the unsafe condition identified in the MCAI.

FAA's Determination and Requirements of This Proposed AD

This product has been approved by the aviation authority of another country, and is approved for operation in the United States. Pursuant to our bilateral agreement with the State of Design Authority, we have been notified of the unsafe condition described in the MCAI and service information referenced above. We are proposing this AD because we evaluated all pertinent information and determined an unsafe condition exists and is likely to exist or develop on other products of the same type design.

Costs of Compliance

Based on the service information, we estimate that this proposed AD would affect about 253 products of U.S. registry. We also estimate that it would take about 1 work-hour per product to comply with the basic requirements of this proposed AD. The average labor rate is $85 per work-hour. Based on these figures, we estimate the cost of the proposed AD on U.S. operators to be $21,505, or $85 per product.

Authority for This Rulemaking

Title 49 of the United States Code specifies the FAA's authority to issue rules on aviation safety. Subtitle I, section 106, describes the authority of the FAA Administrator. ''Subtitle VII: Aviation Programs,'' describes in more detail the scope of the Agency's authority.

We are issuing this rulemaking under the authority described in ''Subtitle VII, Part A, Subpart III, Section 44701: General requirements.'' Under that section, Congress charges the FAA with promoting safe flight of civil aircraft in air commerce by prescribing regulations for practices, methods, and procedures the Administrator finds necessary for safety in air commerce. This regulation is within the scope of that authority because it addresses an unsafe condition that is likely to exist or develop on products identified in this rulemaking action.

Regulatory Findings

We determined that this proposed AD would not have federalism implications under Executive Order 13132. This proposed AD would not have a substantial direct effect on the States, on the relationship between the national Government and the States, or on the distribution of power and responsibilities among the various levels of government.

For the reasons discussed above, I certify this proposed regulation:

1. Is not a ''significant regulatory action'' under Executive Order 12866;

2. Is not a ''significant rule'' under the DOT Regulatory Policies and Procedures (44 FR 11034, February 26, 1979);

3. Will not affect intrastate aviation in Alaska; and

4. Will not have a significant economic impact, positive or negative, on a substantial number of small entities under the criteria of the Regulatory Flexibility Act.

We prepared a regulatory evaluation of the estimated costs to comply with this proposed AD and placed it in the AD docket.

List of Subjects in 14 CFR Part 39

Air transportation, Aircraft, Aviation safety, Incorporation by reference, Safety.

The Proposed Amendment

Accordingly, under the authority delegated to me by the Administrator, the FAA proposes to amend 14 CFR part 39 as follows:

PART 39—AIRWORTHINESS DIRECTIVES

1. The authority citation for part 39 continues to read as follows:

Authority: 49 U.S.C. 106(g), 40113, 44701.

§ 39.13 [Amended]

2. The FAA amends § 39.13 by adding the following new AD:

Dassault Aviation: Docket No. FAA–2012–1037; Directorate Identifier 2012–NM–008–AD.

(a) Comments Due Date

We must receive comments by November 19, 2012.

(b) Affected ADs

Certain requirements of this AD terminate the requirements of AD 2012–02–18, Amendment 39–16941 (77 FR 12175, February 29, 2012); and AD 2010–26–05, Amendment 39–16544 (75 FR 79952, December 21, 2010), for the airplanes identified in paragraph (c) of this AD.

(c) Applicability

(1) This AD applies to DASSAULT AVIATION Model MYSTERE–FALCON 50 airplanes, certificated in any category, all serial numbers.

(2) This AD requires revisions to certain operator maintenance documents to include new inspections. Compliance with these inspections is required by 14 CFR 91.403(c). For airplanes that have been previously modified, altered, or repaired in the areas addressed by these inspections, the operator may not be able to accomplish the inspections described in the revisions. In this situation, to comply with 14 CFR 91.403(c), the operator must request approval for an alternative method of compliance according to paragraph (j)(1) of this AD. The request should include a description of changes to the required inspections that will ensure the continued operational safety of the airplane.

(d) Subject

Air Transport Association (ATA) of America Code 05, Periodic inspections.

(e) Reason

This AD was prompted by a manufacturer revision to the airplane maintenance manual (AMM) that introduces new or more restrictive maintenance requirements and/or airworthiness limitations. We are issuing this AD to prevent reduced structural integrity of the airplane.

(f) Compliance

You are responsible for having the actions required by this AD performed within the compliance times specified, unless the actions have already been done.

(g) Maintenance Program Revision

Within 30 days after the effective date of this AD: Revise the maintenance program to incorporate all airworthiness limitations and maintenance tasks specified in Section 05–40/00, Airworthiness Limitations, of Chapter 5–40, Airworthiness Limitations, of the Dassault Falcon 50/50EX Maintenance Manual, Revision 21, dated June 21, 2011. The initial compliance times for the tasks are at the applicable times specified in Section 05–40/00, Airworthiness Limitations, of Chapter 5–40, Airworthiness Limitations, of the Dassault Falcon 50/50EX Maintenance Manual, Revision 21, dated June 21, 2011, or within 30 days after the effective date of this AD, whichever occurs later.

(h) No Alternative Actions, Intervals, and/or Critical Design Configuration Control Limitations (CDCCLs)

After accomplishing the revisions required by paragraph (g) of this AD, no alternative actions (e.g., inspections), intervals, and/or CDCCLs may be used other than those specified in Section 05–40/00, Airworthiness Limitations, of Chapter 5–40, Airworthiness Limitations, of the Dassault Falcon 50/50EX Maintenance Manual, Revision 21, dated June 21, 2011, unless the actions, intervals, and/or CDCCLs are approved as an

alternative methods of compliance (AMOC) in accordance with the procedures specified in paragraph (j)(1) of this AD.

(i) Terminating Action for Certain ADs

Accomplishing the actions required by paragraph (g) of this AD terminates the requirements of AD 2012–02–18, Amendment 39–16941 (77 FR 12175, February 29, 2012); and AD 2010–26–05, Amendment 39–16544 (75 FR 79952, December 21, 2010); for the DASSAULT AVIATION Model MYSTERE–FALCON 50 airplanes specified in those ADs.

(j) Other FAA AD Provisions

The following provisions also apply to this AD:

(1) *Alternative Methods of Compliance (AMOCs):* The Manager, International Branch, ANM–116, Transport Airplane Directorate, FAA, has the authority to approve AMOCs for this AD, if requested using the procedures found in 14 CFR 39.19. In accordance with 14 CFR 39.19, send your request to your principal inspector or local Flight Standards District Office, as appropriate. If sending information directly to the International Branch, send it to ATTN: Tom Rodriguez, Aerospace Engineer, International Branch, ANM–116, Transport Airplane Directorate, FAA, 1601 Lind Avenue SW., Renton, WA 98057–3356; telephone (425) 227–1137; fax (425) 227–1149. Information may be emailed to: *9-ANM-116-AMOC-REQUESTS@faa.gov*. Before using any approved AMOC, notify your appropriate principal inspector, or lacking a principal inspector, the manager of the local flight standards district office/certificate holding district office. The AMOC approval letter must specifically reference this AD.

(2) *Airworthy Product:* For any requirement in this AD to obtain corrective actions from a manufacturer or other source, use these actions if they are FAA-approved. Corrective actions are considered FAA-approved if they are approved by the State of Design Authority (or their delegated agent). You are required to assure the product is airworthy before it is returned to service.

(k) Related Information

(1) Refer to MCAI European Aviation Safety Agency Airworthiness Directive 2011–0246, dated December 22, 2011; and Section 05–40/00, Airworthiness Limitations, of Chapter 5–40, Airworthiness Limitations, of the Dassault Falcon 50/50EX Maintenance Manual, Revision 21, dated June 21, 2011; for related information.

(2) For service information identified in this AD, contact Dassault Falcon Jet, P.O. Box 2000, South Hackensack, New Jersey 07606; telephone 201–440–6700; Internet *http://www.dassaultfalcon.com*. You may review copies of the referenced service information at the FAA, Transport Airplane Directorate, 1601 Lind Avenue SW., Renton, WA. For information on the availability of this material at the FAA, call 425–227–1221.

Issued in Renton, Washington, on September 26, 2012.

Ali Bahrami,

Manager, Transport Airplane Directorate, Aircraft Certification Service.

[FR Doc. 2012–24392 Filed 10–2–12; 8:45 am]

BILLING CODE 4910–13–P

DEPARTMENT OF TRANSPORTATION

Federal Aviation Administration

14 CFR Part 39

[Docket No. FAA–2011–1253; Directorate Identifier 2011–NM–079–AD]

RIN 2120–AA64

Airworthiness Directives; Airbus Airplanes

AGENCY: Federal Aviation Administration (FAA), DOT.

ACTION: Supplemental notice of proposed rulemaking (NPRM); reopening of comment period.

SUMMARY: We are revising an earlier proposed airworthiness directive (AD) that would supersede an existing AD for certain Airbus Model A318, A319, A320, and A321 series airplanes. For certain airplanes, that NPRM proposed repetitive inspections for cracks of the forward lug of each main landing gear (MLG) support rib 5 fitting and repair if necessary; and removing Model 318 airplanes from the applicability. That NPRM was prompted by reports of cracks found in the forward lug of the MLG support rib 5 fitting. This action revises that NPRM by adding Model A318 airplanes and others to the applicability; and requiring repetitive detailed inspections for cracks of the MLG support 5 fitting, and repair of any cracks. We are proposing this AD to prevent cracking in the forward lug of the MLG, which could result in failure of the lug and consequent collapse of the MLG during takeoff or landing. Since these actions impose an additional burden over that proposed in the NPRM, we are reopening the comment period to allow the public the chance to comment on these proposed changes.

DATES: We must receive comments on this proposed AD by November 19, 2012.

ADDRESSES: You may send comments by any of the following methods:

- *Federal eRulemaking Portal:* Go to *http://www.regulations.gov*. Follow the instructions for submitting comments.
- *Fax:* (202) 493–2251.
- *Mail:* U.S. Department of Transportation, Docket Operations, M–30, West Building Ground Floor, Room W12–140, 1200 New Jersey Avenue SE., Washington, DC 20590.
- *Hand Delivery:* U.S. Department of Transportation, Docket Operations, M–30, West Building Ground Floor, Room W12–140, 1200 New Jersey Avenue SE., Washington, DC, between 9 a.m. and 5 p.m., Monday through Friday, except Federal holidays.

For service information identified in this proposed AD, contact Airbus, Airworthiness Office—EAS, 1 Rond Point Maurice Bellonte, 31707 Blagnac Cedex, France; telephone +33 5 61 93 36 96; fax +33 5 61 93 44 51; email: *account.airworth-eas@airbus.com;* Internet *http://www.airbus.com*. You may review copies of the referenced service information at the FAA, Transport Airplane Directorate, 1601 Lind Avenue SW., Renton, WA. For information on the availability of this material at the FAA, call 425–227–1221.

Examining the AD Docket

You may examine the AD docket on the Internet at *http://www.regulations.gov;* or in person at the Docket Operations office between 9 a.m. and 5 p.m., Monday through Friday, except Federal holidays. The AD docket contains this proposed AD, the regulatory evaluation, any comments received, and other information. The street address for the Docket Operations office (telephone (800) 647–5527) is in the **ADDRESSES** section. Comments will be available in the AD docket shortly after receipt.

FOR FURTHER INFORMATION CONTACT: Sanjay Ralhan, Aerospace Engineer, International Branch, ANM–116, Transport Airplane Directorate, FAA, 1601 Lind Avenue SW., Renton, WA 98057–3356; telephone 425–227–1405; fax 425–227–1149.

SUPPLEMENTARY INFORMATION:

Comments Invited

We invite you to send any written relevant data, views, or arguments about this proposed AD. Send your comments to an address listed under the **ADDRESSES** section. Include ''Docket No. FAA–2011–1253; Directorate Identifier 2011–NM–079–AD'' at the beginning of your comments. We specifically invite comments on the overall regulatory, economic, environmental, and energy aspects of this proposed AD. We will consider all comments received by the closing date and may amend this proposed AD based on those comments.

We will post all comments we receive, without change, to *http://www.regulations.gov,* including any personal information you provide. We

will also post a report summarizing each substantive verbal contact we receive about this proposed AD.

Discussion

We proposed to amend 14 CFR part 39 with an earlier NPRM for the specified products, which was published in the **Federal Register** on November 23, 2011 (76 FR 72350). That earlier NPRM proposed to supersede AD 2008–08–04, Amendment 39–15456 (73 FR 19975, April 14, 2008), which superseded AD 2006–11–04, Amendment 39–14608 (71 FR 29578, May 23, 2006), to require actions intended to address the unsafe condition for the products listed above.

Since that NPRM (76 FR 72350, November 23, 2011) was issued, new service information has been issued that specifies additional actions that are necessary to address the identified unsafe condition. We have also determined that repetitive detailed inspections for cracks of the MLG support rib 5 fitting, and repair of any cracks found, must be required for Model A318 airplanes and airplanes on which Airbus modification 32025 has been embodied in production. The European Aviation Safety Agency (EASA), which is the Technical Agent for the Member States of the European Community, has issued EASA Airworthiness Directive 2012–0032, dated February 24, 2012 (referred to after this as ''the MCAI''), to correct an unsafe condition for the specified products. The MCAI states:

Several cases of corrosion of the Main Landing Gear (MLG) support Rib 5 fitting lug bores have been reported on A320 family aeroplanes. In some instances, corrosion pits caused the cracking of the forward lug (sometimes through its complete thickness). If not detected, the cracking may lead to the complete failure of the fitting and thus could affect the structural integrity of the MLG installation.

EASA AD 2007–0213 [which corresponds to FAA AD 2008–08–04, Amendment 39–15456 (73 FR 19975, April 14, 2008] was issued to address this condition and required a repetitive inspection program of the MLG support Rib 5 fitting forward lugs and, as terminating action, the embodiment of Airbus Service Bulletin (SB) A320–57–1118.

After that [EASA] AD was issued, a case of Rib 5, ruptured at the 4 o'clock position, was discovered on an aeroplane on which the terminating action of EASA AD 2007–0213 had already been embodied in accordance with Airbus SB A320–57–1118.

Investigation of that case revealed that corrosion damage and cracking that should have been removed by repair machining was below the level of detectability of the Non Destructive Test (NDT) technique that cleared the surfaces prior to bush installation.

This condition, if not detected and corrected, could affect the structural integrity of the aeroplane.

To correct this potential unsafe condition, EASA issued AD 2011–0011, [which corresponds to FAA NPRM 2011–NM–179–AD (76 FR 72350, November 23, 2011)] superseding EASA AD 2007–0213, to:

—retain the requirements of EASA AD 2007–0213 for aeroplanes on which the MLG Rib Bushes have not been modified/repaired in accordance with the instructions of Airbus SB A320–57–1118, or Airbus SRM 57–26–13, or the identified Airbus Repair Instructions, as applicable, and

—require, for all aeroplanes on which Airbus SB A320–57–1118 has been embodied in service, or on which Airbus SRM 57–26–13 or the identified Airbus Repair Instructions have been applied, a repetitive inspection program [for cracks] of the MLG support Rib 5 fitting forward lugs and, depending on findings, the accomplishment of the associated corrective actions, and

—reduce the Applicability by deleting A318 aeroplanes, as Airbus modification 32025 is embodied in production on both left-hand (LH) and right-hand (RH) wings for all A318 aeroplanes.

After that AD was issued, three cases of corrosion of Rib 5 were discovered on aeroplanes on which Airbus modification 32025 had been embodied in production. Investigations revealed that the unsafe condition addressed by AD 2011–0011 could occur or develop on those aeroplanes as well.

For the reasons described above, this [EASA] AD retains the requirements of EASA AD 2011–0011, which is superseded, extends the applicability to all aeroplanes, and requires for aeroplanes on which Airbus modification 32025 has been embodied in production, repetitive inspections of the MLG support Rib 5 fitting forward lugs and, depending on findings, the accomplishment of applicable corrective actions.

The unsafe condition is cracking in the forward lug of the MLG, which could result in failure of the lug and consequent collapse of the MLG during takeoff or landing. You may obtain further information by examining the MCAI in the AD docket.

Relevant Service Information

Airbus has issued Mandatory Service Bulletin A320–57A1166, Revision 01, dated October 19, 2011; and Service Bulletin A320–75–1168, dated November 7, 2011. The actions described in this service information are intended to correct the unsafe condition identified in the MCAI.

Comments

We have considered the following comments received on the earlier NPRM (76 FR 72350, November 23, 2011).

Agreement With the Intent of the NPRM (76 FR 72350, November 23, 2011)

United Airlines (United) stated that it generally agrees with the intent of the NPRM (76 FR 72350, November 23, 2011).

Agreement With Post-Modification Inspections

US Airways stated it agrees with the post-modification inspections in the NPRM (76 FR 72350, November 23, 2011).

Support for the NPRM (76 FR 72350, November 23, 2011)

Donjeta Dervisholli stated that the NPRM (76 FR 72350, November 23, 2011) should ''be passed'' because it will make flights safer and it will also get things up to code. The commenter also stated that adopting the AD will help create jobs for the economy as well, and will help stabilize the economy and make money. The commenter concluded that this regulation needs ''to pass'' to make sure that cracking will not happen again and there will be no more damage.

Request To Delay Publication of Rule

Airbus requested that we postpone issuing the final rule to ''be in line with the forthcoming EASA AD,'' or that we issue the final rule with caution notes. Airbus stated it is currently in the process with EASA of issuing a new AD to extend the inspection program to all Airbus Model A318, A319, A320, and A321 airplanes, and that Airbus modification 32025 will no longer be considered a terminating action in the forthcoming EASA AD.

We agree with postponing the final rule and, instead, will release this supplemental NPRM because it has been recently determined that Airbus modification 32025 does not mitigate the unsafe condition. In addition, we have recently determined that there is no terminating action available for the repetitive inspection requirement of this supplemental NPRM.

Request To Delay Issuance of the Final Rule

US Airways requested that we review Airbus Service Bulletin A320–57–1168, dated November 7, 2011, with EASA so that a single AD can be written to cover both post-modification 32025 airplanes and the in-service fleet and to avoid another supersedure AD. US Airways stated that the production modification of the fittings and the in-service modification according to Airbus Mandatory Service Bulletin A320–57–1118, Revision 04, dated June 4, 2008, has been shown to be ineffective at

preventing corrosion. The commenter stated that Airbus has released Airbus Service Bulletin SB A320–57–1168, dated November 7, 2011, which recommends repetitive inspections at 500-flight-cycle intervals for new delivery and replacement of fittings after a 5-year threshold elapses.

As stated previously, we are releasing this supplemental NPRM because it has been recently determined that Airbus modification 32025 does not mitigate the unsafe condition. In addition, we have recently determined that there is no terminating action available for the repetitive inspection requirement of this supplemental NPRM.

Requests To Clarify Approved Alternative Methods of Compliance (AMOCs)

United and US Airways requested clarification of the applicability of AMOCs previously approved for AD 2006–11–04, Amendment 39–14608 (71 FR 29578, May 23, 2006); and AD 2008–08–04, Amendment 39–15456 (73 FR 19975, April 14, 2008).

We agree to clarify the validity of AMOC approvals granted for AD 2006–11–04, Amendment 39–14608 (71 FR 29578, May 23, 2006); and AD 2008–08–04, Amendment 39–15456 (73 FR 19975, April 14, 2008). We have revised the statement in paragraph (u)(1) of this supplemental NPRM to state that AMOCs approved previously in accordance with AD 2006–11–04 and AD 2008–08–04 are approved as AMOCs for the corresponding provisions of this supplemental NPRM.

Request To Reference a Repair Drawing

United requested that we revise the NPRM (76 FR 72350, November 23, 2011) to include recently released Airbus Repair Drawing R572 481, Issue A, dated November 11, 2011, in paragraphs (j)(1) and (j)(2) of the NPRM. United also requested that if Airbus Mandatory Service Bulletin A320–57–1118, Revision 04, dated June 4, 2008, is revised before the release of the final rule, then that service bulletin should also include Airbus Repair Drawing R572 481, Issue A, dated November 11, 2011, and the new service information should be referenced in the final rule.

We disagree. Paragraph (j)(1) of the NPRM (76 FR 72350, November 23, 2011) references ''Airbus Service Bulletin A320–57–1118,'' which includes all revisions of that service bulletin. Once an operator accomplishes any revision of Airbus Service Bulletin A320–57–1118, the affected airplane is subject to the actions specified in paragraphs (k), (m), and (n) of this supplemental NPRM. In addition, Airbus Repair Drawing R572 481, Issue A, dated November 11, 2011, is not an acceptable method of compliance for any action in this supplemental NPRM and, therefore, would not be included in the conditions specified in paragraphs (j)(1) and (j)(2) of this supplemental NPRM. We have not changed the supplemental NPRM in this regard.

Request To Include New Service Information

United requested that we revise the NPRM (76 FR 72350, November 23, 2011) to refer to Airbus Mandatory Service Bulletin A320–57A1166, Revision 01, dated October 19, 2011, for the actions specified in paragraph (o) of the NPRM.

We agree. As discussed previously, Airbus Mandatory Service Bulletin A320–57A1166, Revision 01, dated October 19, 2011, was issued while the comment period was open for the NPRM (76 FR 72350, November 23, 2011). That service bulletin includes minor edits and does not add an additional economic burden. We have revised paragraph (n) of this supplemental NPRM (paragraph (o) of the NPRM) to reference Airbus Mandatory Service Bulletin A320–57A1166, Revision 01, dated October 19, 2011; and added paragraph (t) to this supplemental NPRM to give credit for corresponding actions done before the effective date of the AD using Airbus Service Bulletin A320–57A1166, dated January 12, 2011. We have also updated the subsequent paragraph identifiers accordingly.

Request To Reference Specifications Without Revision Dates

US Airways requested that we revise the NPRM (76 FR 72350, November 23, 2011) to specify the structural repair manual chapter and paragraph, or by drawing number, without revision dates. US Airways stated that specification of corrective actions by document dates, as specified in paragraph (i) of the NPRM, unnecessarily restricts the use of latest and best repair practices. The referenced repair documents are now roughly between seven and eleven years old. US Airways pointed out that Airbus has made efforts to improve these repairs in that time frame, and by restricting operators to the use of historic documents, the FAA is making it difficult to incorporate improved repair methods.

We partially agree. We agree with US Airways that the most current approved service information should be referenced in the AD. We must reference the revision dates in an AD when referring to the service document, because not doing so violates the Office of the Federal Register (OFR) policies for approval of materials ''incorporated by reference'' in rules. In general terms, we are required by these OFR policies to either publish the service document contents as part of the actual AD language; or submit the service document to the OFR for approval as ''referenced'' material, in which case we may only refer to such material in the text of an AD. The AD may refer to the service document only if the OFR approved it for ''incorporation by reference.'' To allow operators to use later revisions of the referenced document (issued after publication of the AD), either we must revise the AD to reference specific later revisions, or operators may request approval to use later revisions as an AMOC with the AD under the provisions of paragraph (u) of this supplemental NPRM. As stated previously, we have revised the supplemental NPRM to accept previously approved AMOCs for the corresponding provisions of this supplemental NPRM. We have not changed the AD regarding incorporating service information without revision dates.

Request To Reformat Table 1 of the NPRM (76 FR 72350, November 23, 2011)

US Airways requested that we correct the formatting of table 1 to paragraph (k) of the NPRM (76 FR 72350, November 23, 2011). The commenter stated that the details in the first two rows of that table are data for Airbus Model A319 and A320 airplanes, while the third and fourth rows provide information for Model A321 airplanes.

We find that clarification is necessary. The commenter correctly specified the information in table 1 to paragraph (k) of the NPRM (76 FR 72350, November 23, 2011), but identified no errors that require correction. The information in table 1 to paragraph (k) of this supplemental NPRM is correct. However, we have added a reference to Model A318 airplanes to the first row of the table.

FAA's Determination and Requirements of This Proposed AD

This product has been approved by the aviation authority of another country, and is approved for operation in the United States. Pursuant to our bilateral agreement with the State of Design Authority, we have been notified of the unsafe condition described in the MCAI and service information referenced above. We are proposing this AD because we evaluated all pertinent

information and determined an unsafe condition exists and is likely to exist or develop on other products of the same type design.

Certain changes described above expand the scope of the earlier NPRM (76 FR 72350, November 23, 2011). As a result, we have determined that it is necessary to reopen the comment period to provide additional opportunity for the public to comment on this proposed AD.

Additional Changes to the Supplemental NPRM

We have removed certain service information as a method of compliance from paragraphs (g), (h), (i), and (j) of the NPRM (76 FR 72350, November 23, 2011), in this supplemental NPRM. We have also added certain credit for actions done before the effective date of this AD in paragraph (t) of this supplemental NPRM, using that removed service information.

Costs of Compliance

Based on the service information, we estimate that this proposed AD would affect about 740 products of U.S. registry.

The actions that are required by AD 2008–08–04, Amendment 39–15456 (73 FR 19975, April 14, 2008), and retained in this proposed AD take about 73 work-hours per product, at an average labor rate of $85 per work hour. Required parts would cost about $3,860 per product. Where the service information lists required parts costs that are covered under warranty, we have assumed that there will be no charge for these parts. As we do not control warranty coverage for affected parties, some parties may incur costs higher than estimated here. Based on these figures, the estimated cost of the currently required actions is $10,065 per product.

We estimate that it would take about 3 work-hours per product to comply with the new basic requirements of this proposed AD. The average labor rate is $85 per work-hour. Based on these figures, we estimate the cost of the new actions in this proposed AD on U.S. operators to be up to $188,700, or $255 per product.

We have received no definitive data that would enable us to provide cost estimates for the on-condition actions specified in this proposed AD.

Authority for This Rulemaking

Title 49 of the United States Code specifies the FAA's authority to issue rules on aviation safety. Subtitle I, section 106, describes the authority of the FAA Administrator. ''Subtitle VII: Aviation Programs,'' describes in more detail the scope of the Agency's authority.

We are issuing this rulemaking under the authority described in ''Subtitle VII, Part A, Subpart III, Section 44701: General requirements.'' Under that section, Congress charges the FAA with promoting safe flight of civil aircraft in air commerce by prescribing regulations for practices, methods, and procedures the Administrator finds necessary for safety in air commerce. This regulation is within the scope of that authority because it addresses an unsafe condition that is likely to exist or develop on products identified in this rulemaking action.

Regulatory Findings

We determined that this proposed AD would not have federalism implications under Executive Order 13132. This proposed AD would not have a substantial direct effect on the States, on the relationship between the national Government and the States, or on the distribution of power and responsibilities among the various levels of government.

For the reasons discussed above, I certify this proposed regulation:

1. Is not a ''significant regulatory action'' under Executive Order 12866;
2. Is not a ''significant rule'' under the DOT Regulatory Policies and Procedures (44 FR 11034, February 26, 1979);
3. Will not affect intrastate aviation in Alaska; and
4. Will not have a significant economic impact, positive or negative, on a substantial number of small entities under the criteria of the Regulatory Flexibility Act.

We prepared a regulatory evaluation of the estimated costs to comply with this proposed AD and placed it in the AD docket.

List of Subjects in 14 CFR Part 39

Air transportation, Aircraft, Aviation safety, Incorporation by reference, Safety.

The Proposed Amendment

Accordingly, under the authority delegated to me by the Administrator, the FAA proposes to amend 14 CFR part 39 as follows:

PART 39—AIRWORTHINESS DIRECTIVES

1. The authority citation for part 39 continues to read as follows:

Authority: 49 U.S.C. 106(g), 40113, 44701.

§ 39.13 [Amended]

2. The FAA amends § 39.13 by removing Airworthiness Directive (AD) 2008–08–04, Amendment 39–15456 (73 FR 19975, April 14, 2008), and adding the following new AD:

Airbus: Docket No. FAA–2011–1253; Directorate Identifier 2011–NM–079–AD.

(a) Comments Due Date

We must receive comments by November 19, 2012.

(b) Affected ADs

This AD supersedes AD 2008–08–04, Amendment 39–15456 (73 FR 19975, April 14, 2008), which superseded AD 2006–11–04, Amendment 39–14608 (71 FR 29578, May 23, 2006).

(c) Applicability

This AD applies to Airbus Model A318–111, –112, –121, and –122; A319–111, A319–112, A319–113, A319–114, A319–115, A319–131, A319–132, and A319–133; A320–111, A320–211, A320–212, A320–214, A320–231, A320–232, and A320–233; and A321–111, A321–112, A321–131, A321–211, A321–212, A321–213, A321–231, and A321–232 airplanes; certificated in any category; all manufacturer serial numbers.

(d) Subject

Air Transport Association (ATA) of America Code 57, Wings.

(e) Reason

This AD was prompted by reports of cracks found in the forward lug of the main landing gear (MLG) support rib 5 fitting. We are issuing this AD to prevent cracking in the forward lug of the MLG, which could result in failure of the lug and consequent collapse of the MLG during takeoff or landing.

(f) Compliance

You are responsible for having the actions required by this AD performed within the compliance times specified, unless the actions have already been done.

(g) Retained Repetitive Detailed Inspections With Changes

This paragraph restates the requirements of paragraph (f) of AD 2008–08–04, Amendment 39–15456 (73 FR 19975, April 14, 2008), with changes. Except for airplanes on which Airbus modification 32025 has been accomplished in production, within 8 days after June 7, 2006 (the effective date of AD 2006–11–04, Amendment 39–14608 (71 FR 29578, May 23, 2006)), or before further flight after a hard landing, whichever is first: Perform a detailed inspection for cracking in the forward lug of the support rib 5 fitting of the left- and right-hand MLG, and, if any crack is found, replace the MLG fitting with a new fitting before further flight, in accordance with a method approved by the Manager, International Branch, ANM–116, Transport Airplane Directorate, FAA, or the European Aviation Safety Agency (EASA) (or its delegated agent). Repeat the inspection thereafter at intervals not to exceed 8 days, or before further flight after a hard landing, whichever is first. As of May 19, 2008 (the effective date of AD 2008–08–04), the repetitive inspections required by paragraph (k) of this AD must be accomplished in lieu

of the repetitive inspections required by this paragraph.

(h) Retained Optional Inspection Method With Changes

This paragraph restates the requirements of paragraph (g) of AD 2008–08–04, Amendment 39–15456 (73 FR 19975, April 14, 2008), with revised service information. Performing an ultrasonic inspection for cracking in the forward lug of the support rib 5 fitting of the left- and right-hand MLG, in accordance with an applicable method specified in paragraph (h)(1) or (h)(2) of this AD is an acceptable alternative method of compliance for the initial and repetitive inspections required by paragraph (g) of this AD.

(1) In accordance with a method approved by the Manager, International Branch, ANM–116, or the EASA (or its delegated agent).

(2) In accordance with Task 57–29–03–270–801–A–01, Gear Rib Forward Lug Attachment for the Main Landing Gear Before Modification 32025J2211, of Chapter 57, Wings, of the Airbus A318/A319/A320/A321 Nondestructive Testing Manual, Revision 89, dated August 1, 2011.

(i) Retained Optional Terminating Action With Changes

This paragraph restates the requirements of paragraph (h) of AD 2008–08–04, Amendment 39–15456 (73 FR 19975, April 14, 2008). Repair of the forward lugs of the support rib 5 fitting of the left- and right-hand MLG done before the effective date of this AD, in accordance with a method approved by the Manager, International Branch, ANM–116, or the EASA (or its delegated agent); constitutes terminating action for the requirements of paragraphs (g), (h), (k), (l), and (m) of this AD.

(j) Retained Referenced Conditions With Revised Affected Airplanes

To identify affected airplanes in paragraphs (k), (m), and (o) of this AD, this AD refers to the following conditions:

(1) Airplanes on which the modification of the MLG rib bushes specified in Airbus Service Bulletin A320–57–1118 has been done.

(2) Airplanes on which a repair of the MLG support rib 5 fitting has been done in accordance with paragraph 5.C. of Subsection 57–26–13, Attachments—Main Landing Gear, of the Airbus A319 Structural Repair Manual (SRM), Revision November 1, 2004; paragraph 5.D. of Subsection 57–26–13, Attachments—Main Landing Gear, of the Airbus A320 SRM, Revision November 1, 2004; or paragraph 5.D. of Subsection 57–26–13, Attachments—Main Landing Gear, of the Airbus A321 SRM, Revision February 1, 2005; as applicable.

(3) Airplanes on which replacement in service of the MLG support rib 5 specified in Airbus Repair Instruction R572–58507 and Airbus Repair Drawing R57258209, or Airbus Repair Instruction R572–45020 and Airbus Repair Drawing R57245019, as applicable, has been done.

(k) Retained Repetitive Inspections

This paragraph restates the requirements of paragraph (i) of AD 2008–08–04, Amendment 39–15456 (73 FR 19975, April 14, 2008). For airplanes on which none of the actions specified in paragraphs (j)(1), (j)(2), and (j)(3) of this AD have been done, except for airplanes on which Airbus modification 32025 has been accomplished: At the applicable time specified in table 1 to paragraph (k) of this AD, or before further flight after a hard landing, whichever is first, do a visual inspection or ultrasonic inspection for cracking in the forward lug of the support rib 5 fitting of the left and right MLG, in accordance with the Accomplishment Instructions of Airbus Service Bulletin A320–57–1138, Revision 01, dated October 27, 2006. Repeat the inspection thereafter at the applicable interval specified in table 1 to paragraph (k) of this AD or before further flight after a hard landing, whichever is first, until the modification required by paragraph (m) of this AD has been accomplished. Accomplishing the initial inspection terminates the requirements of paragraph (g) of this AD.

TABLE 1 TO PARAGRAPH (K) OF THIS AD—COMPLIANCE TIMES

Airplanes	Initial inspection	Repetitive interval
(1) Model A318, A319, and A320 airplanes.	(i) If the most recent inspection is a detailed inspection done in accordance with paragraph (g) of this AD, inspect within 150 flight cycles after the most recent detailed inspection.	Within 150 flight cycles after a visual inspection.
	(ii) If the most recent inspection is an ultrasonic inspection done in accordance with paragraph (h) of this AD, inspect within 940 flight cycles after the most recent ultrasonic inspection.	Within 940 flight cycles after an ultrasonic inspection.
(2) Model A321 airplanes.	(i) If the most recent inspection is a detailed inspection done in accordance with paragraph (g) of this AD, inspect within 100 flight cycles after the most recent detailed inspection.	Within 100 flight cycles after a visual inspection.
	(ii) If the most recent inspection is an ultrasonic inspection done in accordance with paragraph (h) of this AD, inspect within 630 flight cycles after the most recent ultrasonic inspection.	Within 630 flight cycles after an ultrasonic inspection.

(l) Retained Corrective Action

This paragraph restates the requirements of paragraph (j) of AD 2008–08–04, Amendment 39–15456 (73 FR 19975, April 14, 2008). If any cracking is found during any inspection required by paragraph (k) of this AD: Before further flight, repair or replace the cracked MLG fitting, in accordance with a method approved by the Manager, International Branch, ANM–116, or the EASA (or its delegated agent).

(m) Retained Rib Bushing Modification

This paragraph restates the requirements of paragraph (k) of AD 2008–08–04, Amendment 39–15456 (73 FR 19975, April 14, 2008), with revised service information. Except for airplanes on which the actions specified in paragraph (j)(1) or (j)(3) of this AD have been done, and except for airplanes on which Airbus modification 32025 has been accomplished: Within 60 months after May 19, 2008 (the effective date of AD 2008–08–04), modify the rib bushings of the left and right MLG, by accomplishing all of the applicable actions specified in the Accomplishment Instructions of Airbus Service Bulletin A320–57–1118, Revision 03, dated April 23, 2007; or Airbus Mandatory Service Bulletin A320–57–1118, Revision 04, dated June 4, 2008. Accomplishing this modification terminates the requirements of paragraphs (g) and (k) of this AD, and then the requirements of paragraph (n) of this AD must be done.

(n) New Post-Modification/Post-Repair Inspections

For airplanes on which the actions specified in paragraph (j)(1), (j)(2), or (m) of this AD have been done: At the later of the times specified in paragraphs (n)(1) and (n)(2) of this AD, do a detailed inspection for cracks of the forward lug of each left-hand and right-hand MLG support rib 5 fitting, in accordance with the Accomplishment Instructions of Airbus Mandatory Service Bulletin A320–57A1166, Revision 01, dated October 19, 2011. Repeat the inspection thereafter at intervals not to exceed 500 flight cycles.

(1) Within 2,000 flight cycles after accomplishing the modification specified in paragraph (j)(1) or (m) of this AD, or the repair specified in paragraph (j)(2) of this AD, as applicable.

(2) Within 250 flight cycles after the effective date of this AD, without exceeding 3 months after the effective date of this AD.

(o) New Repair of Cracking Found During Post-Modification/Post-Repair

If any crack is detected during any inspection required by paragraph (n) of this AD: Before further flight, repair using a method approved by either the Manager,

International Branch, ANM–116, Transport Airplane Directorate, FAA, or the EASA (or its delegated agent).

(p) New Optional Terminating Action

Replacement of a MLG support rib 5 fitting at any position (left-hand or right-hand), as specified in paragraph (j)(3) of this AD, terminates the requirements of paragraphs (k) and (n) of this AD for the MLG support rib 5 fitting at that position.

(q) New Repetitive Detailed Inspection for Certain Airplanes

For airplanes on which the actions specified in paragraph (j)(3) of this AD have been done: Within 60 months after the replacement or within 500 flight cycles after the effective date of this AD, whichever occurs later, do a detailed inspection of the forward lug of each left-hand and right-hand MLG support Rib 5 fitting that has been replaced, in accordance with the Accomplishment Instructions of Airbus Mandatory Service Bulletin A320–57A1166, Revision 01, dated October 19, 2011. Repeat the inspection thereafter at intervals not to exceed 500 flight cycles.

(r) New Repetitive Inspections for Airplanes with Airbus Modification 32025

For airplanes on which Airbus modification 32025 has been accomplished: At the applicable time specified in paragraph (r)(1,) (r)(2), (r)(3), or (r)(4) of this AD, do a detailed inspection for cracks of the forward lug of each left-hand and right-hand MLG support rib 5 fitting, in accordance with the Accomplishment Instructions of Airbus Service Bulletin A320–57–1168, dated November 7, 2011. Repeat the inspection thereafter at intervals not to exceed 500 flight cycles.

(1) For airplanes on which the MLG support rib 5 has not been modified nor repaired since the first flight of the airplane as of the effective date of this AD: Within 60 months after the first flight of the airplane or within 500 flight cycles after the effective date of this AD, whichever occurs later.

(2) For airplanes on which the MLG support rib 5 has been replaced as specified in paragraph (j)(3) of this AD as of the effective date of this AD: Within 60 months after the replacement of the MLG support rib 5 or within 500 flight cycles after the effective date of this AD, whichever occurs later.

(3) For airplanes on which the MLG support rib 5 has been repaired according to the SRM or a repair approval sheet as of the effective date of this AD: At the later of the times specified in paragraph (r)(3)(i) or (r)(3)(ii) of this AD.

(i) Within 2,000 flight cycles after the repair.

(ii) Within 250 flight cycles or 3 months after the effective date of this AD, whichever occurs first.

(4) For airplanes having a manufacturer serial number listed in table 2 to paragraph (r)(4) of this AD, and on which the MLG support rib 5 has been inspected before the effective date of this AD according to specific Airbus repair instructions or technical disposition: At the later of the times specified in paragraph (r)(4)(i) or (r)(4)(ii) of this AD.

TABLE 2 TO PARAGRAPH (r)(4) OF THIS AD—MANUFACTURER SERIAL NUMBER (S/N)

S/N—		
1965	2056	2155
2274	2278	2288
2321	2478	2586
2588	2612	2672
2688	2707	2929
2942	3089	3117
3361	3427	3486
3489	3806	3891
3937	4243	4345

(i) Within 2,000 flight cycles after the last inspection done using specific Airbus repair instructions or a technical disposition, or within 60 months since first flight of the airplane, whichever occurs later.

(ii) Within 250 flight cycles or 3 months after the effective date of this AD, whichever occurs first.

(s) New Repair of Cracking

If any crack is detected during any inspection required by paragraph (q) or (r) of this AD: Before further flight, repair using a method approved by either the Manager, International Branch, ANM–116, Transport Airplane Directorate, FAA, or the EASA (or its delegated agent).

(t) Credit for Previous Actions

(1) This paragraph provides credit for the actions required by paragraph (g) of this AD, if those actions were performed before the effective date of this AD using Airbus A318/A319/A320/A321 Nondestructive Testing Manual, Chapter 51–90–00, Revision dated February 1, 2003.

(2) This paragraph provides credit for the actions required by paragraph (h) of this AD, if those actions were performed before the effective date of this AD using Airbus A318/A319/A320/A321 Nondestructive Testing Manual, Chapter 57–29–03, Revision dated February 1, 2005 (for Model A318, A319, and A320 airplanes); or Chapter 57–29–04, Revision dated May 1, 2005 (for Model A321 airplanes).

(3) This paragraph provides credit for the actions specified in paragraph (i) of this AD, if those actions were performed before the effective date of this AD using paragraph 5.C. of Subsection 57–26–13, Attachments—Main Landing Gear, of the Airbus A319 Structural Repair Manual (SRM), Revision November 1, 2004; paragraph 5.D. of Subsection 57–26–13, Attachments—Main Landing Gear, of the Airbus A320 SRM, Revision November 1, 2004; or paragraph 5.D. of Subsection 57–26–13, Attachments—Main Landing Gear, of the Airbus A321 SRM, Revision February 1, 2005; as applicable.

(4) This paragraph provides credit for the inspections required by paragraphs (n) and (r) of this AD, if the inspections were performed before the effective date of this AD using Airbus Service Bulletin A320–57A1166, dated January 12, 2011.

(5) This paragraph provides credit for the modification required by paragraph (m) of this AD, if the modification was performed before May 19, 2008 (the effective date of AD 2008–08–04, Amendment 39–15456 (73 FR 19975, April 14, 2008), using service information identified in paragraph (t)(5)(i), (t)(5)(ii), or (t)(5)(iii) of this AD.

(i) Airbus Service Bulletin A320–57–1118, dated September 5, 2002.

(ii) Airbus Service Bulletin A320–57–1118, Revision 01, dated August 28, 2003.

(iii) Airbus Service Bulletin A320–57–1118, Revision 02, dated August 2, 2006.

(u) Other FAA AD Provisions

The following provisions also apply to this AD:

(1) *Alternative Methods of Compliance (AMOCs):* The Manager, International Branch, ANM–116, FAA, has the authority to approve AMOCs for this AD, if requested using the procedures found in 14 CFR 39.19. In accordance with 14 CFR 39.19, send your request to your principal inspector or local Flight Standards District Office, as appropriate. If sending information directly to the International Branch, send it to ATTN: Sanjay Ralhan, Aerospace Engineer, International Branch, ANM–116, Transport Airplane Directorate, FAA, 1601 Lind Avenue SW., Renton, WA 98057–3356; telephone 425–227–1405; fax 425–227–1149. Information may be emailed to: *9-ANM-116-AMOC-REQUESTS@faa.gov.* Before using any approved AMOC, notify your appropriate principal inspector, or lacking a principal inspector, the manager of the local flight standards district office/certificate holding district office. The AMOC approval letter must specifically reference this AD. AMOCs approved previously in accordance with AD 2006–11–04, Amendment 39–14608 (71 FR 29578, May 23, 2006); and AD 2008–08–04, Amendment 39–15456 (73 FR 19975, April 14, 2008); are approved as AMOCs for the corresponding provisions of this AD.

(2) *Airworthy Product:* For any requirement in this AD to obtain corrective actions from a manufacturer or other source, use these actions if they are FAA-approved. Corrective actions are considered FAA-approved if they are approved by the State of Design Authority (or their delegated agent). You are required to ensure the product is airworthy before it is returned to service.

(v) Related Information

Refer to MCAI EASA Airworthiness Directive 2012–0032, dated February 24, 2012, and the following service information, for related information.

(1) Airbus Mandatory Service Bulletin A320–57–1118, Revision 04, dated June 4, 2008.

(2) Airbus Mandatory Service Bulletin A320–57A1166, Revision 01, dated October 19, 2011.

(3) Airbus Service Bulletin A320–57–1168, dated November 7, 2011.

(4) Airbus Service Bulletin A320–57–1118, Revision 03, dated April 23, 2007.

(5) Airbus Service Bulletin A320–57–1138, Revision 01, dated October 27, 2006.

(6) Task 57–29–03–270–801–A–01, Gear Rib Forward Lug Attachment for the Main Landing Gear Before Modification 32025J2211, of Chapter 57, Wings, of the Airbus A318/A319/A320/A321 Nondestructive Testing Manual, Revision 89, dated August 1, 2011.

Issued in Renton, Washington, on September 26, 2012.

Ali Bahrami,

Manager, Transport Airplane Directorate, Aircraft Certification Service.

[FR Doc. 2012–24393 Filed 10–2–12; 8:45 am]

BILLING CODE 4910–13–P

DEPARTMENT OF TRANSPORTATION

Federal Aviation Administration

14 CFR Part 39

[Docket No. FAA–2012–1035; Directorate Identifier 2011–NM–235–AD]

RIN 2120–AA64

Airworthiness Directives; Airbus Airplanes

AGENCY: Federal Aviation Administration (FAA), DOT.

ACTION: Notice of proposed rulemaking (NPRM).

SUMMARY: We propose to adopt a new airworthiness directive (AD) for certain Airbus Model A318, A319, A320, and A321 series airplanes. This proposed AD was prompted by a report of an uncommanded nose landing gear (NLG) retraction. This proposed AD would require installing a power interruption protection circuit for the landing gear control interface unit (LGCIU). We are proposing this AD to prevent untimely unlocking and/or retraction of the NLG, which, while on the ground, could result in injury to ground personnel and damage to the airplane.

DATES: We must receive comments on this proposed AD by November 19, 2012.

ADDRESSES: You may send comments by any of the following methods:

- *Federal eRulemaking Portal:* Go to *http://www.regulations.gov.* Follow the instructions for submitting comments.
- *Fax:* (202) 493–2251.
- *Mail:* U.S. Department of Transportation, Docket Operations, M–30, West Building Ground Floor, Room W12–140, 1200 New Jersey Avenue SE., Washington, DC 20590.
- *Hand Delivery:* U.S. Department of Transportation, Docket Operations, M–30, West Building Ground Floor, Room W12–140, 1200 New Jersey Avenue SE., Washington, DC, between 9 a.m. and 5 p.m., Monday through Friday, except Federal holidays.

For service information identified in this proposed AD, contact Airbus, Airworthiness Office—EAS, 1 Rond Point Maurice Bellonte, 31707 Blagnac Cedex, France; telephone +33 5 61 93 36 96; fax +33 5 61 93 44 51; email *account.airworth-eas@airbus.com;* Internet *http://www.airbus.com.* You may review copies of the referenced service information at the FAA, Transport Airplane Directorate, 1601 Lind Avenue SW., Renton, Washington. For information on the availability of this material at the FAA, call 425–227–1221.

Examining the AD Docket

You may examine the AD docket on the Internet at *http://www.regulations.gov;* or in person at the Docket Operations office between 9 a.m. and 5 p.m., Monday through Friday, except Federal holidays. The AD docket contains this proposed AD, the regulatory evaluation, any comments received, and other information. The street address for the Docket Operations office (telephone (800) 647–5527) is in the **ADDRESSES** section. Comments will be available in the AD docket shortly after receipt.

FOR FURTHER INFORMATION CONTACT: Sanjay Ralhan, Aerospace Engineer, International Branch, ANM–116, Transport Airplane Directorate, FAA, 1601 Lind Avenue SW., Renton, WA 98057–3356; telephone (425) 227–1405; fax (425) 227–1149.

SUPPLEMENTARY INFORMATION:

Comments Invited

We invite you to send any written relevant data, views, or arguments about this proposed AD. Send your comments to an address listed under the **ADDRESSES** section. Include ''Docket No. FAA–2012–1035; Directorate Identifier 2011–NM–235–AD'' at the beginning of your comments. We specifically invite comments on the overall regulatory, economic, environmental, and energy aspects of this proposed AD. We will consider all comments received by the closing date and may amend this proposed AD based on those comments.

We will post all comments we receive, without change, to *http://www.regulations.gov,* including any personal information you provide. We will also post a report summarizing each substantive verbal contact we receive about this proposed AD.

Discussion

The European Aviation Safety Agency (EASA), which is the Technical Agent for the Member States of the European Community, has issued EASA Airworthiness Directive 2011–0202, dated October 13, 2011 (referred to after this as ''the MCAI''), to correct an unsafe condition for the specified products. The MCAI states:

> After a push back from the gate, an A320 aeroplane was preparing to initiate taxi, when an uncommanded nose landing gear (NLG) retraction occurred, causing the nose of the aeroplane to hit the ground. Investigations revealed that the retraction was caused by a combination of a power interruption to LGCIUs [landing gear control interface unit] and an internal hydraulic leak through the landing gear (LG) selector valve 40GA.
>
> Deeper investigations have revealed that LGCIU power interruption appears during engine start at each flight. Even though no incident has been reported in service, it has been determined that a non compliance to the safety objective exists when combined with a dormant single failure of the selector valve seal leaking.
>
> This condition, if not corrected, could lead to further incidents of untimely unlocking and/or retraction of the NLG which, while on the ground, could result in injury to ground personnel and damage to the aeroplane.
>
> To address the possible hydraulic leak of the LG selector valve, EASA issued AD 2007–0065, currently at Revision 2.
>
> For the reasons described above, this [EASA] AD requires installation of a power interruption protection circuit to the LGCIU and the accomplishment of associated modifications [install new seals on nose landing gear (NLG)/main landing gear (MLG) door valve selector and gear valve-selector and for certain airplanes, re-identification of identification plates].

You may obtain further information by examining the MCAI in the AD docket.

Relevant Service Information

Airbus has issued the following service bulletins:

- Airbus Service Bulletin A320–32–1346, Revision 04, including Appendices 1 and 2, dated April 22, 2011 (for Model A318, A319, A320, and A321 series airplanes).
- Airbus Service Bulletin A320–32–1349, Revision 03, including Appendix 1, dated October 5, 2011 (for Model A319CJ (corporate jet) airplanes).

The actions described in this service information are intended to correct the unsafe condition identified in the MCAI.

FAA's Determination and Requirements of This Proposed AD

This product has been approved by the aviation authority of another country, and is approved for operation in the United States. Pursuant to our bilateral agreement with the State of Design Authority, we have been notified of the unsafe condition described in the MCAI and service information referenced above. We are proposing this AD because we evaluated all pertinent information and determined an unsafe condition exists and is likely to exist or develop on other products of the same type design.

Costs of Compliance

Based on the service information, we estimate that this proposed AD would affect about 755 products of U.S. registry. We also estimate that it would take about 48 work-hours per product to comply with the basic requirements of this proposed AD. The average labor rate is $85 per work-hour. Required parts would cost up to $8,220 per product. Where the service information lists required parts costs that are covered under warranty, we have assumed that there will be no charge for these parts. As we do not control warranty coverage for affected parties, some parties may incur costs higher than estimated here. Based on these figures, we estimate the cost of the proposed AD on U.S. operators to be up to $9,286,500, or up to $12,300 per product.

Authority for This Rulemaking

Title 49 of the United States Code specifies the FAA's authority to issue rules on aviation safety. Subtitle I, section 106, describes the authority of the FAA Administrator. ''Subtitle VII: Aviation Programs,'' describes in more detail the scope of the Agency's authority.

We are issuing this rulemaking under the authority described in ''Subtitle VII, Part A, Subpart III, Section 44701: General requirements.'' Under that section, Congress charges the FAA with promoting safe flight of civil aircraft in air commerce by prescribing regulations for practices, methods, and procedures the Administrator finds necessary for safety in air commerce. This regulation is within the scope of that authority because it addresses an unsafe condition that is likely to exist or develop on products identified in this rulemaking action.

Regulatory Findings

We determined that this proposed AD would not have federalism implications under Executive Order 13132. This proposed AD would not have a substantial direct effect on the States, on the relationship between the national Government and the States, or on the distribution of power and responsibilities among the various levels of government.

For the reasons discussed above, I certify that this AD:

1. Is not a ''significant regulatory action'' under Executive Order 12866;

2. Is not a ''significant rule'' under the DOT Regulatory Policies and Procedures (44 FR 11034, February 26, 1979);

3. Will not affect intrastate aviation in Alaska; and

4. Will not have a significant economic impact, positive or negative, on a substantial number of small entities under the criteria of the Regulatory Flexibility Act.

We prepared a regulatory evaluation of the estimated costs to comply with this proposed AD and placed it in the AD docket.

List of Subjects in 14 CFR Part 39

Air transportation, Aircraft, Aviation safety, Incorporation by reference, Safety.

The Proposed Amendment

Accordingly, under the authority delegated to me by the Administrator, the FAA proposes to amend 14 CFR part 39 as follows:

PART 39—AIRWORTHINESS DIRECTIVES

1. The authority citation for part 39 continues to read as follows:

Authority: 49 U.S.C. 106(g), 40113, 44701.

§ 39.13 [Amended]

2. The FAA amends § 39.13 by adding the following new AD:

Airbus: Docket No. FAA–2012–1035; Directorate Identifier 2011–NM–235–AD.

(a) Comments Due Date

We must receive comments by November 19, 2012.

(b) Affected ADs

None.

(c) Applicability

This AD applies to Airbus Model A318–111, A318–112, A318–121, A318–122, A319–111, A319–112, A319–113, A319–114, A319–115, A319–131, A319–132, A319–133, A320–111, A320–211, A320–212, A320–214, A320–231, A320–232, A320–233, A321–111, A321–112, A321–131, A321–211, A321–212, A321–213, A321–231, and A321–232 airplanes; certificated in any category; all manufacturer serial numbers, except airplanes on which Airbus modification 37866 has been embodied in production.

(d) Subject

Air Transport Association (ATA) of America Code 32: Landing Gear.

(e) Reason

This AD was prompted by a report of an uncommanded nose landing gear (NLG) retraction. We are issuing this AD to prevent untimely unlocking and/or retraction of the NLG, which, while on the ground, could result in injury to ground personnel and damage to the airplane.

(f) Compliance

You are responsible for having the actions required by this AD performed within the compliance times specified, unless the actions have already been done.

(g) Modification

At the applicable compliance time specified in paragraph (g)(1) or (g)(2) of this AD: Install a power interruption protection circuit for the landing gear control interface unit (LGCIU), in accordance with the Accomplishment Instructions of Airbus Service Bulletin A320–32–1346, Revision 04, including Appendices 1 and 2, dated April 22, 2011 (for Model A318, A319, A320, and A321 series airplanes other than the Model A319CJ (corporate jet) airplanes); or Airbus Service Bulletin A320–32–1349, Revision 3, including Appendix 1, dated October 5, 2011 (for Model A319CJ (corporate jet) airplanes).

(1) For airplanes that have embodied Airbus modification 38947 specified in Airbus Service Bulletin A320–32–1348 during production or in service: Within 72 months after the effective date of this AD.

(2) For all airplanes other than those identified in paragraph (g)(1) of this AD: Within 60 months after the effective date of this AD.

(h) Re-Identification of Identification Plates

For airplanes that have done the installation required by paragraph (g) of this AD before the effective date of this AD using Airbus Service Bulletin A320–32–1346, dated December 4, 2008 (for airplanes other than the Model A319CJ (corporate jet) airplanes): At the applicable times specified in paragraphs (g)(1) and (g)(2) of this AD, re-identify the identification plates, in accordance with the Accomplishment Instructions of Airbus Service Bulletin A320–32–1346, Revision 4, including Appendices 1 and 2, dated April 22, 2011 (for airplanes other than the Model A319CJ (corporate jet) airplanes).

(i) Credit for Previous Actions

This paragraph provides credit for the actions required by paragraph (g) of this AD, if those actions were performed before the effective date of this AD using the service information specified in paragraphs (i)(1) through (i)(6) of this AD which is not incorporated by reference in this AD:

(1) Airbus Service Bulletin A320–32–1346, Revision 1, dated October 27, 2009 (for Model A318, A319, A320, and A321 series airplanes).

(2) Airbus Service Bulletin A320–32–1346, Revision 2, dated November 4, 2009 (for Model A318, A319, A320, and A321 series airplanes).

(3) Airbus Service Bulletin A320–32–1346, Revision 3, dated January 7, 2010 (for Model A318, A319, A320, and A321 series airplanes).

(4) Airbus Service Bulletin A320–32–1349, dated December 4, 2008 (for Model A319CJ (corporate jet) airplanes).

(5) Airbus Service Bulletin A320–32–1349, Revision 1, dated August 31, 2009, (for Model A319CJ (corporate jet) airplanes).

(6) Airbus Service Bulletin A320–32–1349, Revision 2, dated June 16, 2010 (for Model A319CJ (corporate jet) airplanes).

(j) Other FAA AD Provisions

The following provisions also apply to this AD:

(1) *Alternative Methods of Compliance (AMOCs):* The Manager, ANM–116,

International Branch, Transport Airplane Directorate, FAA, has the authority to approve AMOCs for this AD, if requested using the procedures found in 14 CFR 39.19. In accordance with 14 CFR 39.19, send your request to your principal inspector or local Flight Standards District Office, as appropriate. If sending information directly to the International Branch, send it to ATTN: Sanjay Ralhan, Aerospace Engineer, International Branch, ANM–116, Transport Airplane Directorate, FAA, 1601 Lind Avenue SW., Renton, WA 98057–3356; telephone (425) 227–1405; fax (425) 227–1149. Information may be emailed to: *9-ANM-116-AMOC-REQUESTS@faa.gov.* Before using any approved AMOC, notify your appropriate principal inspector, or lacking a principal inspector, the manager of the local flight standards district office/certificate holding district office. The AMOC approval letter must specifically reference this AD.

(2) *Airworthy Product:* For any requirement in this AD to obtain corrective actions from a manufacturer or other source, use these actions if they are FAA-approved. Corrective actions are considered FAA-approved if they are approved by the State of Design Authority (or their delegated agent). You are required to assure the product is airworthy before it is returned to service.

(k) Related Information

(1) Refer to MCAI European Aviation Safety Agency Airworthiness Directive 2011–0202, dated October 13, 2011, and the service information specified in paragraphs (k)(1)(i) and (k)(1)(ii) of this AD, for related information.

(i) Airbus Service Bulletin A320–32–1346, Revision 4, including Appendices 1 and 2, dated April 22, 2011.

(ii) Airbus Service Bulletin A320–32–1349, Revision 03, including Appendix 1, dated October 5, 2011.

(2) For service information identified in this AD, contact Airbus, Airworthiness Office—EAS, 1 Rond Point Maurice Bellonte, 31707 Blagnac Cedex, France; telephone +33 5 61 93 36 96; fax +33 5 61 93 44 51; email *account.airworth-eas@airbus.com;* Internet *http://www.airbus.com.* You may review copies of the referenced service information at the FAA, Transport Airplane Directorate, 1601 Lind Avenue SW., Renton, WA. For information on the availability of this material at the FAA, call 425–227–1221.

Issued in Renton, Washington, on September 26, 2012.

Ali Bahrami,

Manager, Transport Airplane Directorate, Aircraft Certification Service.

[FR Doc. 2012–24394 Filed 10–2–12; 8:45 am]

BILLING CODE 4910–13–P

LIBRARY OF CONGRESS

Copyright Office

37 CFR Part 201

[Docket No. 2012–5]

Verification of Statements of Account Submitted by Cable Operators and Satellite Carriers

AGENCY: Copyright Office, Library of Congress.

ACTION: Notice of proposed rulemaking; extension of reply comment period.

SUMMARY: The Copyright Office is again extending the deadline for filing reply comments in response to its Notice of Proposed Rulemaking concerning the verification of Statements of Account and royalty payments that are deposited with the Office by cable operators and satellite carriers.

DATES: Reply comments on the proposed rule published at 77 FR 35643, June 14, 2012, must be received in the Office of the General Counsel of the Copyright Office no later than 5 p.m. Eastern Daylight Time (EDT) on October 24, 2012.

ADDRESSES: The Copyright Office strongly prefers that comments be submitted electronically. A comment submission page is posted on the Copyright Office Web site at *http://www.copyright.gov/docs/soaaudit/.* The Web site interface requires submitters to complete a form specifying name and other required information, and to upload comments as an attachment. To meet accessibility standards, all comments must be uploaded in a single file in either the Adobe Portable Document File (PDF) format that contains searchable, accessible text (not an image); Microsoft Word; WordPerfect; Rich Text Format (RTF); or ASCII text file format (not a scanned document). The maximum file size is 6 megabytes (MB). The name of the submitter and organization should appear on both the form and the face of the comments. All comments will be posted publicly on the Copyright Office Web site exactly as they are received, along with names and organizations if provided. If electronic submission of comments is not feasible, please contact the Copyright Office at (202) 707–8380 for special instructions.

FOR FURTHER INFORMATION CONTACT: Tanya Sandros, Deputy General Counsel, or Erik Bertin, Attorney Advisor, Copyright GC/I&R, P.O. Box 70400, Washington, DC 20024. Telephone: (202) 707–8380. Telefax: (202) 707–8366.

SUPPLEMENTARY INFORMATION: On June 14, 2012, the Copyright Office published a notice of proposed rulemaking and request for comments concerning a new regulation that will allow copyright owners to audit the Statements of Account and royalty fees that cable operators and satellite carriers deposit with the Copyright Office under Sections 111 and 119 of the Copyright Act. The Office received comments on the proposed regulation from groups representing copyright owners, cable operators, and satellite carriers, which have been posted on the Copyright Office Web site at *http://www.copyright.gov/docs/soaaudit/comments/index.html.* The notice of proposed rulemaking stated that reply comments would be due on September 12, 2012. See 77 FR 35643, June 14, 2012.

On August 24, 2012, the Office received a joint motion to extend the reply comment period (posted on the Office Web site at: *http://www.copyright.gov/docs/soaaudit/soa_audit.html*), which was filed by the National Cable & Telecommunications Association (''NCTA''),[1] the Joint Sports Claimants, and the Program Suppliers.[2] The moving parties asked the Office to extend the deadline for reply comments until October 3, 2012 in order to determine whether they agree on any aspects of the proposed regulation, which in turn, may narrow the issues that need to be resolved in this rulemaking. The Office granted the moving parties' request, stating that reply comments would be due by October 3, 2012, as requested. See 77 FR 55783 (Sept. 11, 2012).

On September 26, 2012 the NCTA, the Joint Sports Claimants, and the Program Suppliers filed a second motion to extend the reply comment period for another three weeks (posted on the Office Web site at: *http://www.copyright.gov/docs/soaaudit/soa_audit.html*). Specifically, the moving parties asked the Office to extend the deadline for reply comments until October 24, 2012. In support of their latest motion,

[1] The NCTA is a trade association that represents cable operators. Many of the NCTA's members file Statements of Account with and pay royalties to the Copyright Office under the statutory license set forth in Section 111 of the Copyright Act, which allows them to retransmit television and radio programs that are embodied in local distant broadcast transmissions.

[2] Both the Joint Sports Claimants and the Program Suppliers represent copyright owners who are the beneficiaries of the royalties that are paid under the Section 111 and 119 statutory licenses. Generally speaking, the Joint Sports Claimants represent copyright owners that produce professional and college sports programming, while the Program Suppliers represent copyright owners that produce and/or syndicate movies, programs, and specials that are broadcast by television stations.

the moving parties stated that they have discussed the proposed regulation, but given the complexity of the issues involved, they need more time to complete their discussions and to prepare a joint set of reply comments (assuming they are able to reach an agreement). The moving parties stated that a three week extension would facilitate these discussions without causing harm to any interested person.

In their initial motion, the NCTA, the Joint Sports Claimants, and the Program Suppliers asked the Office to extend the deadline for reply comments until October 3rd, indicating that this would give them a sufficient amount of time to discuss the proposed regulation and to reach an agreement ''regarding procedures to be presented to the Office as part of the reply comments.'' Having granted that request, the Office is reluctant to extend the deadline further. But in the interest of giving the NCTA, the Joint Sports Claimants, the Program Suppliers, and any other interested parties an opportunity to wrap-up their discussions, and if possible, to prepare a joint recommendation on the proposed regulation, the Office has decided to grant the stakeholders' request and extend the deadline for filing reply comments by another three weeks, making reply comments due by October 24, 2012. Further extensions will not be granted.

Dated: September 27, 2012.

Maria A. Pallante,

Register of Copyrights.

[FR Doc. 2012–24321 Filed 10–2–12; 8:45 am]

BILLING CODE 1410–30–P

POSTAL SERVICE

39 CFR Part 111

New Marking Standards for Parcels Containing Hazardous Materials

AGENCY: Postal Service™.

ACTION: Proposed rule.

SUMMARY: The Postal Service is proposing to revise *Mailing Standards of the United States Postal Service,* Domestic Mail Manual (DMM®) 601.10 to adopt new mandatory marking standards for parcels containing mailable hazardous material that will align with the revised requirements provided by the Department of Transportation (DOT). This proposed rule also provides terminology and categorization changes needed to respond to the pending elimination of the ''Other Regulated Material'' (ORM–D) category and the partial elimination of the ''Consumer Commodity'' category by the DOT.

DATES: Submit comments on or before October 23, 2012.

ADDRESSES: Mail or deliver written comments to the manager, Product Classification, U.S. Postal Service, 475 L'Enfant Plaza SW., Room 4446, Washington, DC 20260–5015. You may inspect and photocopy all written comments at USPS® Headquarters Library, 475 L'Enfant Plaza SW., 11th Floor North, Washington, DC, by appointment only between the hours of 9 a.m. and 4 p.m., Monday through Friday. Call 202–268–2906 in advance for an appointment. Email comments, containing the name and address of the commenter, may be sent to *MailingStandards@usps.gov,* with a subject line of ''Hazardous Materials.'' Faxed comments are not accepted.

FOR FURTHER INFORMATION CONTACT: Kevin Gunther at 202–268–7208.

SUPPLEMENTARY INFORMATION: The Postal Service proposes to revise DMM 601.10, and to make corresponding revisions to Publication 52, *Hazardous, Restricted, and Perishable Mail,* chapters 2, 3 and 7, and Appendices A and C, to adopt new marking standards for parcels containing mailable hazardous materials. These marking standards were recently added to the DMM for optional use by mailers, as an alternative to the current DMM marking standards for parcels containing mailable hazardous materials.

If this proposal is adopted, the Postal Service will require use of these markings on parcels intended for air and surface transportation. However, the new markings standards will be deferred for parcels intended for surface transportation, to coincide with the delayed implementation date for ground transportation proscribed by the DOT. The new standards, including proposed implementation dates, are summarized below.

Mailers should note that any other marking or documentation requirements not specifically referenced in this proposed rule, including the preparation of a properly completed shipper's declaration, will not be modified or eliminated by any of the revisions described herein.

Background

On January 19, 2011, the DOT's Pipeline and Hazardous Materials Safety Administration (PHMSA) published final rule HM–215K (76 FR 3308–3389), which harmonized the requirements of the U.S. Hazardous Materials Regulations (HMR) with international transport requirements. In its **Federal Register** final rule, PHMSA signaled its intent to, among other things, eliminate the ''Other Regulated Material'' (ORM–D) classification for all forms of transportation. This change will become effective on January 1, 2013 for shipments intended for air transportation, and on January 1, 2015 for shipments intended for surface transportation.

In addition to the elimination of the ORM–D category, PHMSA also eliminated the ''consumer commodity'' category for products in hazard classes 4, 5, and 8, as well as a portion of hazard class 9, for all shipments intended for air transportation. This change will become effective on January 1, 2013. After this date, the mailability of materials previously falling within the ''consumer commodity'' category must be evaluated based on its eligibility under the limited quantity category in the HMR.

PHMSA expects that the alignment of the existing limited quantity provisions in the HMR with international standards and regulations will enhance safety by facilitating a single uniform system of transporting limited quantity materials. Because of the inherent risk unique to air transportation, PHMSA believes that full harmonization with the International Civil Aviation Organization Technical Instructions (ICAO TI) is necessary with regard to the materials authorized and the guidelines for limited quantities (including consumer commodities) intended for transport by air. The ICAO TI also include specific provisions for air transport of dangerous goods in the mail, which are much more restrictive than the general standards. No dangerous goods are allowed in international mail, with the exception of certain infectious substances, certain patient specimens and certain radioactive materials as noted in section 135 of *Mailing Standards of the United States Postal Service,* International Mail Manual (IMM®); and these materials may only be sent by authorized mailers for authorized purposes.

Proposed Air Transport Standards for January 1, 2013

The Postal Service plans to align its hazardous materials mailing requirements with those of the DOT Pipeline and Hazardous Materials Safety Administration (PHMSA) by proposing the mandatory use of the marking standards described in this proposed rule on all parcels intended for air transportation. These rules were incorporated into the DMM for optional use on August 6, 2012. If this proposal is adopted these optional markings will

become mandatory effective January 1, 2013.

The Postal Service proposes to categorize hazardous materials currently meeting the definition of a mailable ORM–D material within hazard classes 4, 5, or 8, and portions of 9, using the description ''mailable limited quantity;'' and will retain the description ''consumer commodity'' for all other mailable hazard classes. If this proposal is adopted, the Postal Service will revise the DMM to replace the current ORM–D category for parcels containing materials intended for air transportation with the applicable ''consumer commodity'' or the new ''mailable limited quantity'' categories, effective January 1, 2013.

Under this proposal, mailpieces containing currently authorized air-eligible consumer commodities (ORM–D–AIR) within DOT Class 2.2 (nonflammable, nontoxic gasses), Class 3 (flammable and combustible liquids), Class 6.1 (toxic substances), and Class 9 (miscellaneous) will be reclassified as hazard class 9 (miscellaneous) instead of their previous ''ORM–D–AIR'' classification. Mailpieces containing this material will also be required to bear the proper shipping name ''Consumer Commodity,'' the Identification Number ''ID8000,'' and both the DOT square-on-point marking including the symbol ''Y'' and an approved DOT class 9 hazardous material warning label. Mailpieces must also bear a shipper's declaration for dangerous goods.

Mailpieces containing mailable air-authorized limited quantity class 9 materials within UN3077, UN3082, UN3175, UN3334 and UN3335, will also be required to bear the proper shipping name ''Consumer Commodity,'' Identification Number ''ID8000,'' and both the DOT square-on-point marking including the symbol ''Y'' and an approved DOT Class 9 hazardous material warning label. These are the only Class 9 materials authorized by the DOT to be shipped under the limited quantity classification by domestic air transportation.

If this proposal is adopted, the Postal Service will also require the use of other DOT hazardous warning labels on packages intended for air transportation, containing materials that meet the current definition of a mailable ORM–D material in hazard class 5.1 (oxidizing substances), hazard class 5.2 (organic peroxides) and hazard class 8 (corrosives). The DOT will not be defining a consumer commodity category for these particular hazard classes. Similarly, the DOT will not be defining a consumer commodity in hazard class 4 (flammable solids); however this will not have an impact for USPS mailers since the Postal Service does not currently permit hazard class 4 materials in its air transportation networks. These mailpieces will also be required to bear the proper shipping name and Identification Number, as identified in Publication 52 Appendix A, both DOT square-on-point marking (including the symbol ''Y'') and the appropriate approved DOT hazardous material warning label. Mailpieces must also bear a shipper's declaration for dangerous goods.

Until January 1, 2015, mailable hazardous materials intended for surface transportation will continue to be classified using the ORM–D categorization. Until that time, mailers will have the option of continuing to use the current ''ORM–D'' marking for materials intended for ground transportation, or using the new DOT-authorized ''square-on-point'' limited quantity marking on parcels containing mailable hazardous materials.

Proposed Surface Transport Standards for January 1, 2015

The Postal Service plans to implement the final segment of its alignment with PHMSA by proposing the elimination of the optional ORM–D markings and categorization for hazardous materials intended for surface transportation on January 1, 2015. If this proposed rule is adopted, the use of the ORM–D marking will no longer be permitted for use with any materials being tendered for transport within USPS networks, either by surface or air, and all mailpieces containing hazardous materials will be required to be marked using the appropriate DOT square-on-point marking.

Under these proposed standards, mailable limited quantity and mailable consumer commodity materials, when tendered to the Postal Service, must bear an approved DOT square-on-point marking. The use of additional DOT hazardous material warning labels will not be required or permitted on parcels intended for transportation in USPS ground networks.

Comment Period

Note that the Postal Service has established a 20-day comment period for this proposed rule in order to assure there is sufficient time to implement these proposed standards concurrent with the DOT regulations scheduled to become effective January 1, 2013.

Although we are exempt from the notice and comment requirements of the Administrative Procedure Act [5 U.S.C of 553 (b), (c)] regarding proposed rulemaking by 39 U.S.C. 410 (a), we invite public comments on the following proposed revisions to *Mailing Standards of the United States Postal Service,* Domestic Mail Manual (DMM), incorporated by reference in the *Code of Federal Regulations.* See 39 CFR Part 111.1.

List of Subjects in 39 CFR Part 111

Administrative practice and procedure, Postal Service.

Accordingly, 39 CFR Part 111 is proposed to be amended as follows:

PART 111—[AMENDED]

1. The authority citation for 39 CFR Part 111 continues to read as follows:

Authority: 5 U.S.C. 552(a); 13 U.S.C. 301–307; 18 U.S.C. 1692–1737; 39 U.S.C. 101, 401, 403, 404, 414, 416, 3001–3011, 3201–3219, 3403–3406, 3621, 3622, 3626, 3632, 3633, and 5001.

2. Revise the following sections of *Mailing Standards of the United States Postal Service,* Domestic Mail Manual (DMM), as follows:

***Mailing Standards of the United States Postal Service,* Domestic Mail Manual (DMM)**

* * * * *

600 Basic Standards for All Mailing Services

601 Mailability

* * * * *

10.0 Hazardous Materials

10.1 Definitions

The following definitions apply:

* * * * *

[Revise 10.1c as follows:]

c. *ORM–D (Other Regulated Material) material* is a limited quantity of a hazardous material that presents a limited hazard during transportation due to its form, quantity, and packaging. Not all hazardous materials permitted to be shipped as a limited quantity can qualify as an ORM–D material. The ORM–D category is only applicable for materials intended for ground transportation. Effective January 1, 2015, the ORM–D category will be eliminated for materials intended for surface transportation. After this date, the mailability of materials previously fitting the description of ORM–D must be evaluated based on its eligibility under the applicable consumer commodity or mailable limited quantity categories.

[Revise 10.1d, Consumer Commodity, by adding a new last sentence as follows:]

d. * * * The consumer commodity category will not apply to materials,

intended for air transportation, in hazard classes 4, 5, and 8, and portions of hazard class 9.

[Re-sequence the current 10.1e through 10.1i as the new 10.1f through 10.1j, and add a new item 10.1e as follows:]

e. *Mailable Limited Quantity* is a hazardous material in hazard class 4, 5 or 8 that presents a limited hazard during transportation (specifically air transport), and is mailable in USPS air networks under certain conditions and in limited quantities.

* * * * *

10.3 USPS Standards for Hazardous Material

[Revise 10.3 as follows:]

The USPS standards generally restrict the mailing of hazardous materials to ORM–D (permitted for surface transportation only until January 1, 2015), and consumer commodity or mailable limited quantity materials that meet USPS quantity limitations and packaging requirements. All exceptions are subject to the standards in 10.0. Detailed information on the mailability of specific hazardous materials is contained in Publication 52, *Hazardous, Restricted, and Perishable Mail.*

* * * * *

10.4 Hazard Class

* * * * *

Exhibit 10.4 DOT Hazard Classes and Mailability Summary

Class	Hazard class name and division	Transportation method		
		Domestic mail air transportation	Domestic mail surface transportation	International mail

* * * * *

[Revise text for hazard classes 2 and 3, under the ''Domestic Mail Air Transportation'' column (only) as follows:]

2	Gases ..... Division—2.1 Flammable Gases. 2.2 Nonflammable, Nontoxic Gases. 2.3 Toxic Gases.	*Division 2.1 and 2.3:* Prohibited *Division 2.2:* Only Consumer Commodity materials per 10.12.2.		
3	Flammable and Combustible Liquids.	*Flammable liquids:* Prohibited *Combustibles:* Only Consumer Commodity materials per 10.13.3.		

* * * * *

[Revise text for hazard classes 5 and 6, under the ''Domestic Mail Air Transportation'' column (only) as follows:]

5	Oxidizing Substances, Organic Peroxides. Division— 5.1 Oxidizing Substances. 5.2 Organic Peroxides.	Only Mailable Limited Quantity materials per 10.15.2.		

* * * * *

6	Toxic Substances and Infectious Substances. Division—6.1 Toxic Substances. 6.2 Infectious Substances.	*Division 6.1:* Only Consumer Commodity materials per 10.16.2.. *Division 6.2.* Only per 10.17.		

* * * * *

[Revise text for hazard class 8, under the ''Domestic Mail Air Transportation'' column (only) as follows:]

8	Corrosives	Only Mailable Limited Quantity materials per 10.19.2.		

* * * * *

[Revise text for hazard class 9, under the ''Hazard Class Name and Division'' and ''Domestic Mail Air Transportation'' columns (only) as follows:]

9	Miscellaneous Hazardous Materials. ID8000 materials UN3077, UN3082, UN3175, UN3334 or UN3335 materials	Only Consumer Commodity materials per 10.20		

* * * * *

10.7 Warning Labels for Hazardous Materials

[Revise 10.7 as follows:]

With few exceptions as noted in these standards, most hazardous materials acceptable for mailing fall within the current Other Regulated Materials (ORM–D) regulations of 49 CFR 173.144 for materials intended for surface transportation, and the consumer commodity or mailable limited quantity categories for materials intended for air transportation. Mailpieces containing mailable hazardous materials intended for transportation by air are required to bear an approved DOT square-on-point marking under 10.8b, and may also be required to bear a specific DOT hazardous material warning label (if required for the hazard class shipped). Mailpieces containing mailable hazardous materials must be marked as required in 10.8, and must bear DOT handling labels (e.g., orientation arrows, magnetized materials) when applicable. Effective January 1, 2015, the ORD–D category will be eliminated for materials intended for surface transportation, and mailpieces containing hazardous materials intended for surface transportation will be required to be marked using the appropriate DOT square-on-point marking. Also after this date, the mailability of materials previously fitting the description of ORM–D must be evaluated based on its eligibility under the applicable consumer commodity or mailable limited quantity categories.

10.8 Package Markings for Hazardous Materials

[Revise 10.8 as follows:]

Unless otherwise noted, each mailpiece containing a mailable hazardous material must be plainly and durably marked on the address side with the required shipping name and UN identification number. Mailpieces containing mailable hazardous materials intended for air transportation must bear a DOT limited quantity square-on-point marking under 8b. Mailpieces containing mailable hazardous materials intended for surface transportation may be entered and marked under the ORM–D category until January 1, 2015. After this date, all parcels containing mailable hazardous materials must bear the appropriate DOT square-on-point marking and other associated markings when required. The following also apply:

a. The use of DOT limited quantity square-on-point markings are required for mailpieces intended for air transportation and optional (until January 1, 2015) for mailpieces intended for surface transportation (see Exhibit 10.8b). The plain square-on-point marking is used for shipments sent by surface transportation, and the square-on-point marking including the symbol ''Y'' superimposed in the center is used for shipments sent by air transportation. The following also apply:

1. Markings must be durable, legible and readily visible.

2. The marking must be applied on at least one side or one end of the outer packaging. The border forming the square-on-point must be at least 2 mm (0.08 inch) in width and the minimum dimension of each side must be 100 mm (3.94 inches), unless the package size requires a reduced size marking of no less than 50 mm (1.97 inches) on each side.

3. For surface transportation, the top and bottom portions of the square-on-point and the border forming the square-on-point must be black and the center must be white or of a suitable contrasting background. Surface shipments containing qualifying ORM–D materials and bearing the square-on-point limited quantity marking are not required to be marked with the shipping name and identification number.

4. For transportation by aircraft, the top and bottom portions of the square-on-point and the border forming the square-on-point must be black and the center must be white or of a suitable contrasting background. The symbol ''Y'' must be black and located in the center of the square-on-point and be clearly visible. Mailpieces intended for transport by air must also be marked with the proper shipping name, identification number, and must also display the appropriate DOT hazardous material warning label (only when required for the hazard class shipped) in accordance with Publication 52.

b. The UN identification number is not required on mailpieces containing ORM–D materials and intended for surface transportation. A mailable ORM–D material must be marked on the address side with ''ORM–D'' (or marked under 10.8a) immediately following, or below the proper shipping name. The proper shipping name for a mailable ORM–D material is ''consumer commodity.'' The designation ''ORM–D'' must be placed within a rectangle that is approximately 6.3 mm (¼ inch) larger on each side than the applicable designation. Mailpieces containing ORM–D materials sent as Standard Mail, Parcel Post, Parcel Select, or Package Services must also be marked on the address side as ''Surface Only'' or ''Surface Mail Only.''

* * * * *

10.9 Shipping Papers for Hazardous Materials

* * * Shipping papers are required as follows:

* * * * *

[Revise 10.9a and 10.9b to update product references as follows:]

a. *Air transportation requirements.* Except for nonregulated materials sent under 10.17.3 or 10.17.8 and diagnostic specimens sent under 10.17.5, mailpieces containing mailable hazardous materials sent at the Express Mail, Priority Mail, First-Class Mail, or First-Class Package Service prices must include a shipping paper.

b. *Surface transportation requirements.* Except for nonregulated materials sent under 10.17.3 or 10.17.8 and mailable ORM–D materials, mailpieces containing mailable hazardous materials sent at the Standard Mail, Parcel Post, Parcel Select, or Package Services prices must include a shipping paper.

10.10 Air Transportation Prohibitions for Hazardous Materials

[Revise the introductory paragraph of 10.10 to update product references as follows:]

All mailable hazardous materials sent at the Express Mail, Priority Mail, First-Class Mail, or First-Class Package

Service prices must meet the requirements for air transportation. The following types of hazardous materials that are prohibited from carriage on air transportation must not be sent at the Express Mail, Priority Mail, First-Class Mail, or First-Class Package Service prices:

* * * * *

10.12 Gases (Hazard Class 2)

* * * * *

10.12.2 Mailability

[Revise the third and fourth sentences of 10.12.2 as follows:]

* * * Flammable gases in Division 2.1 are prohibited in domestic mail via air transportation, but are permitted via surface transportation if the material can qualify as an ORM–D material (or after January 1, 2015, a consumer commodity material) and meet the standards in 10.12.3 and 10.12.4. Nonflammable gases in Division 2.2 are generally permitted in the domestic mail via air or surface transportation if the material can qualify as an ORM–D material when intended for surface transportation, or a consumer commodity material when intended for air transportation, and meet the standards in 10.12.3 and 10.12.4.

* * * * *

10.12.4 Marking

[Revise the second sentence, and add a new third sentence for 10.12.4 as follows:]

* * * For air transportation, packages must bear the DOT square-on-point marking including the symbol ''Y,'' an approved DOT class 9 hazardous material warning label, Identification Number ''ID8000,'' and the proper shipping name ''Consumer Commodity.'' Mailpieces must also bear a shipper's declaration for dangerous goods.

10.13 Flammable and Combustible Liquids (Hazard Class 3)

* * * * *

10.13.2 Flammable Liquid Mailability

[Revise the third sentence of the introductory paragraph of 10.13.2 as follows:]

* * * Other flammable liquid is prohibited in domestic mail via air transportation but is permitted via surface transportation if the material can qualify as an ORM–D material (or after January 1, 2015, a consumer commodity material) and meet the following conditions as applicable:

[Revise 10.13.2a and 2b as follows:]

a. The flashpoint is above 20 °F (-7°C) but no more than 73 °F (23 °C); the liquid is in a metal primary receptacle not exceeding 1 quart, or in another type of primary receptacle not exceeding 1 pint, per mailpiece; enough cushioning surrounds the primary receptacle to absorb all potential leakage; the cushioning and primary receptacle are packed within a securely sealed secondary container that is placed within a strong outer shipping container; and each mailpiece is plainly and durably marked on the address side with ''Surface Only'' or ''Surface Mail Only'' and ''ORM–D'' immediately following or below the proper shipping name (or with a DOT square-on-point marking under 10.8b).

b. The flashpoint is above 73 °F (23 °C) but less than 100 °F (38 °C); the liquid is in a metal primary receptacle not exceeding 1 gallon, or in another type of primary receptacle not exceeding 1 quart, per mailpiece; enough cushioning surrounds the primary receptacle to absorb all potential leakage; the cushioning and primary receptacle are placed within a securely sealed secondary container that is placed within a strong outer shipping container; and each mailpiece is plainly and durably marked on the address side with ''Surface Only'' or ''Surface Mail Only'' and ''ORM–D'' immediately following or below the proper shipping name (or with a DOT square-on-point marking under 10.8b).

10.13.3 Combustible Liquid Mailability

[Revise the second sentence of the introductory paragraph of 10.13.3 as follows:]

* * * Combustible liquid is permitted in domestic mail if the material can qualify as an ORM–D material, when intended for ground transportation or a consumer commodity material, when intended for air transportation, and meet the following conditions as applicable:

[*Revise 10.13.3a as follows*:]

a. For surface transportation, if the flashpoint is 100 °F (38 °C) but no more than 141 °F (60.5 °C); the liquid is in a metal primary receptacle not exceeding 1 gallon, or in another type of primary receptacle not exceeding 1 quart, per mailpiece; enough cushioning surrounds the primary receptacle to absorb all potential leakage; the cushioning and primary receptacle are packed in a securely sealed secondary container that is placed within a strong outer shipping container; and each mailpiece is plainly and durably marked on the address side with ''Surface Only'' or ''Surface Mail Only'' and ''ORM–D'' immediately following or below the proper shipping name (or with a DOT square-on-point marking under 10.8b).

[*Revise 10.13.3b as follows*:]

b. For surface or air transportation, if the flashpoint is above 141 °F (60.5 °C) but no more than 200 °F (93 °C); the liquid is in a primary receptacle not exceeding 1 gallon per mailpiece; enough cushioning surrounds the primary receptacle to absorb all potential leakage; the cushioning and primary receptacle are packed in a securely sealed secondary container that is placed within a strong outer shipping container. For surface transportation, each mailpiece must be plainly and durably marked on the address side with ''ORM–D'' immediately following or below the proper shipping name; and each piece must be marked on the address side as ''Surface Only'' or ''Surface Mail Only'' (or with a DOT square-on-point marking under 10.8b). For air transportation, packages must bear the DOT square-on-point marking including the symbol ''Y,'' an approved DOT class 9 hazardous material warning label, Identification Number ''ID8000,'' the proper shipping name ''Consumer Commodity,'' and a shipper's declaration for dangerous goods.

* * * * *

10.14 Flammable Solids (Hazard Class 4)

* * * * *

10.14.2 Mailability

[Revise the last sentence of 10.14.2 as follows:]

* * * A flammable solid that can qualify as an ORM–D material (or after January 1, 2015, a mailable limited quantity material) is permitted in domestic mail via surface transportation if the material is contained in a secure primary receptacle having a weight of 1 pound or less; the primary receptacle(s) is packed in a strong outer shipping container with a total weight of 25 pounds or less per mailpiece; and each mailpiece is plainly and durably marked on the address side with ''Surface Only'' or ''Surface Mail Only'' and ''ORM–D'' immediately following or below the proper shipping name (or with a DOT square-on-point marking under 10.8b).

* * * * *

10.15 Oxidizing Substances, Organic Peroxides (Hazard Class 5)

* * * * *

10.15.2 Mailability

[Revise 10.15.2 as follows:]

Oxidizing substances and organic peroxides are prohibited in international mail. Class 5 materials are permitted in domestic mail if the

material can qualify as an ORM–D material (until January 1, 2015), when intended for ground transportation; or a mailable limited quantity material, when intended for air transportation. Liquid materials must be enclosed within a primary receptacle having a capacity of 1 pint or less; the primary receptacle(s) must be surrounded by absorbent cushioning material and held within a leak-resistant secondary container that is packed within a strong outer shipping container. Solid materials must be contained within a primary receptacle having a weight capacity of 1 pound or less; the primary receptacle(s) must be surrounded with cushioning material and packed within a strong outer shipping container. Each mailpiece may not exceed a total weight of 25 pounds. For surface transportation, each mailpiece must be plainly and durably marked on the address side with ''ORM–D'' immediately following or below the proper shipping name; and each piece must be marked on the address side as ''Surface Only'' or ''Surface Mail Only'' (or with a DOT square-on-point marking under 10.8b). For air transportation, packages must bear the DOT square-on-point marking including the symbol ''Y,'' the appropriate approved DOT class 5.1 or 5.2 hazardous material warning label, the identification number, the proper shipping name, and a shipper's declaration for dangerous goods.

10.16 Toxic Substances (Hazard Class 6, Division 6.1)

* * * * *

10.16.2 Mailability

[Revise the second sentence of 10.16.2 as follows:]

* * * For domestic mail, a Division 6.1 toxic substance or poison that can qualify as an ORM–D material (until January 1, 2015) when intended for ground transportation, or a consumer commodity material when intended for air transportation, is permitted when packaged under the applicable requirements in 10.16.4. * * *

* * * * *

10.16.4 Packaging and Marking

The following requirements must be met, as applicable:

[Revise 16.4a as follows:]

a. A toxic substance that can qualify as an ORM–D material (until January 1, 2015) when intended for ground transportation, or a consumer commodity material when intended for air transportation, and does not exceed a total capacity of 8 ounces per mailpiece is permitted if: the material is held in a primary receptacle(s); enough cushioning material surrounds the primary receptacle to absorb all potential leakage; the cushioning and primary receptacle(s) are packed in another securely sealed secondary container that is placed within a strong outer shipping container. For surface transportation, each mailpiece must be plainly and durably marked on the address side with ''ORM–D'' immediately following or below the proper shipping name; and each piece must be marked on the address side as ''Surface Only'' or ''Surface Mail Only'' (or with a DOT square-on-point marking under 10.8b). For air transportation, packages must bear the DOT square-on-point marking including the symbol ''Y,'' an approved DOT class 9 hazardous material warning label, Identification Number ''ID8000,'' the proper shipping name ''Consumer Commodity,'' and a shipper's declaration for dangerous goods.

* * * * *

10.19 Corrosives (Hazard Class 8)

* * * * *

10.19.2 Mailability

[Revise the second sentence of the introductory paragraph of 10.19.2 as follows:]

* * * A corrosive that can qualify as an ORM–D material (until January 1, 2015), when intended for ground transportation; or a mailable limited quantity material, when intended for air transportation, is permitted in domestic mail via air or surface transportation subject to these limitations:

* * * * *

10.19.3 Marking

[*Revise 10.19.3 as follows:*]

For surface transportation, each mailpiece must be plainly and durably marked on the address side with ''ORM–D'' immediately following or below the proper shipping name; and each piece must be marked on the address side as ''Surface Only'' or ''Surface Mail Only'' (or with a DOT square-on-point marking under 10.8b). For air transportation, packages must bear the DOT square-on-point marking including the symbol ''Y,'' the appropriate approved DOT class 8 hazardous material warning label, the identification number, the proper shipping name, and a shipper's declaration for dangerous goods.

* * * * *

10.20 Miscellaneous Hazardous Materials (Hazard Class 9)

* * * * *

10.20.2 Mailability

[Revise the second sentence of 10.20.2 as follows:]

* * * A miscellaneous hazardous material that can qualify as an ORM–D material (until January 1, 2015) when intended for ground transportation, or a consumer commodity material when intended for air transportation, is permitted for domestic mail via air or surface transportation, subject to the applicable 49 CFR requirements.

10.20.3 Marking

[Revise 10.20.3 as follows:]

For surface transportation, the mailpiece must be plainly and durably marked on the address side with ''Surface Only'' or ''Surface Mail Only'' and ''ORM–D'' immediately following or below the proper shipping name (or with a DOT square-on-point marking under 10.8b). For air transportation, packages must bear the DOT square-on-point marking including the symbol ''Y,'' an approved DOT class 9 hazardous material warning label, Identification Number ''ID8000,'' the proper shipping name ''Consumer Commodity,'' and a shipper's declaration for dangerous goods.

* * * * *

We will publish an appropriate amendment to 39 CFR Part 111 to reflect these changes if our proposal is adopted.

Stanley F. Mires,

Attorney, Legal Policy & Legislative Advice.

[FR Doc. 2012–24296 Filed 10–2–12; 8:45 am]

BILLING CODE 7710–12–P

ENVIRONMENTAL PROTECTION AGENCY

40 CFR Part 52

[EPA–R03–OAR–2010–0601; FRL–9736–1]

Approval and Promulgation of Air Quality Implementation Plans; Pennsylvania; The 2002 Base Year Inventory for the Pittsburgh-Beaver Valley Area for 1997 Fine Particulate Matter National Ambient Air Quality Standard

AGENCY: Environmental Protection Agency (EPA).

ACTION: Proposed rule.

SUMMARY: EPA is proposing to approve the fine particulate matter ($PM_{2.5}$) 2002 base year emissions inventory portion of the Pennsylvania State Implementation Plan (SIP) revision submitted by the Commonwealth of Pennsylvania, through the Pennsylvania Department of

Environmental Protection (PADEP), on November 10, 2009 for the Pittsburgh-Beaver Valley, PA nonattainment area (hereafter referred to as the Area). The emissions inventory is part of the November 10, 2009 SIP revision that was submitted to meet nonattainment requirements related to the Area for the 1997 $PM_{2.5}$ National Ambient Air Quality Standard (NAAQS) SIP. EPA is proposing to approve the 2002 base year $PM_{2.5}$ emissions inventory for the Area in accordance with the requirements of the Clean Air Act (CAA).

DATES: Written comments must be received on or before November 2, 2012.

ADDRESSES: Submit your comments, identified by Docket ID Number EPA–R03–OAR–2010–0601 by one of the following methods:

A. *www.regulations.gov.* Follow the on-line instructions for submitting comments.

B. *Email: mastro.donna@epa.gov.*

C. *Mail:* EPA–R03–OAR–2010–0140, Donna Mastro, Acting Associate Director, Office of Air Program Planning, Mailcode 3AP30, U.S. Environmental Protection Agency, Region III, 1650 Arch Street, Philadelphia, Pennsylvania 19103.

D. *Hand Delivery:* At the previously-listed EPA Region III address. Such deliveries are only accepted during the Docket's normal hours of operation, and special arrangements should be made for deliveries of boxed information.

Instructions: Direct your comments to Docket ID No. EPA–R03–OAR–2010–0601. EPA's policy is that all comments received will be included in the public docket without change, and may be made available online at *www.regulations.gov,* including any personal information provided, unless the comment includes information claimed to be Confidential Business Information (CBI) or other information whose disclosure is restricted by statute. Do not submit information that you consider to be CBI or otherwise protected through *www.regulations.gov* or email. The *www.regulations.gov* Web site is an ''anonymous access'' system, which means EPA will not know your identity or contact information unless you provide it in the body of your comment. If you send an email comment directly to EPA without going through *www.regulations.gov,* your email address will be automatically captured and included as part of the comment that is placed in the public docket and made available on the Internet. If you submit an electronic comment, EPA recommends that you include your name and other contact information in the body of your comment and with any disk or CD–ROM you submit. If EPA cannot read your comment due to technical difficulties and cannot contact you for clarification, EPA may not be able to consider your comment. Electronic files should avoid the use of special characters, any form of encryption, and be free of any defects or viruses.

Docket: All documents in the electronic docket are listed in the *www.regulations.gov* index. Although listed in the index, some information is not publicly available, i.e., CBI or other information whose disclosure is restricted by statute. Certain other material, such as copyrighted material, is not placed on the Internet and will be publicly available only in hard copy form. Publicly available docket materials are available either electronically in *www.regulations.gov* or in hard copy during normal business hours at the Air Protection Division, U.S. Environmental Protection Agency, Region III, 1650 Arch Street, Philadelphia, Pennsylvania 19103. Copies of the State submittal are available at the Pennsylvania Department of Environmental Protection, Bureau of Air Quality Control, P.O. Box 8468, 400 Market Street, Harrisburg, Pennsylvania 17105.

FOR FURTHER INFORMATION CONTACT: Ruth Knapp, (215) 814–2191, or by email at *knapp.ruth@epa.gov.*

SUPPLEMENTARY INFORMATION:

I. Background
II. Summary of SIP Revision
III. Proposed Action
IV. Statutory and Executive Order Reviews

I. Background

Throughout this document, whenever ''we,'' ''us,'' or ''our'' is used, we mean EPA. On July 18, 1997 (62 FR 38652), EPA promulgated the 1997 $PM_{2.5}$ NAAQS, including an annual standard of 15.0 micrograms per cubic meter (μg/m^3) based on a 3-year average of annual mean $PM_{2.5}$ concentrations, and a 24-hour (or daily) standard of 65 μg/m^3 based on a 3-year average of the 98th percentile of 24-hour concentrations. EPA established the standards based on significant evidence and numerous health studies demonstrating that serious health effects are associated with exposures to $PM_{2.5}$.

Following promulgation of a new or revised NAAQS, EPA is required by the CAA to designate areas throughout the United States as attaining or not attaining the NAAQS; this designation process is described in section 107(d)(1) of the CAA. In 1999, EPA and state air quality agencies initiated the monitoring process for the 1997 $PM_{2.5}$ NAAQS and, by January 2001, established a complete set of air quality monitors. On January 5, 2005, EPA promulgated initial air quality designations for the 1997 $PM_{2.5}$ NAAQS (70 FR 944), which became effective on April 5, 2005, based on air quality monitoring data for calendar years 2001–03.

On April 14, 2005, EPA promulgated a supplemental rule (70 FR 19844) amending our initial designations (70 FR 944), with the same effective date (April 5, 2005). As a result of this supplemental rule, $PM_{2.5}$ nonattainment designations are in effect for 39 areas, comprising 208 counties within 20 states (and the District of Columbia) nationwide, with a combined population of approximately 88 million. The Area, which is the subject of this rulemaking, was included in the list of areas not attaining the 1997 $PM_{2.5}$ NAAQS. The Area consists of the following: Allegheny County (remainder of county not included in Liberty-Clairton nonattainment area); Armstrong County (portion consisting of Elderton Borough and Plum Creek and Washington Townships); Beaver County; Butler County; Greene County (portion consisting of Monongahela Township); Lawrence County (portion consisting of Township of Taylor south of New Castle City); Washington County; and Westmorland County.

Section 172(c)(3) of the CAA requires submission and approval of a comprehensive, accurate, and current inventory of actual emissions. This proposed approval is limited to the emissions inventory for the Area. Separate action will be taken on the remainder of Pennsylvania's November 10, 2009 SIP submittal.

II. Summary of SIP Revision

The 2002 base year emission inventory submitted by PADEP on November 10, 2009 for the Area includes emissions estimates that cover the general source categories of point sources, area sources, on-road mobile sources, and non-road mobile sources. The pollutants that comprise the inventory are $PM_{2.5}$, coarse particles (PM_{10}), nitrogen oxides (NO_X), volatile organic compounds (VOCs), ammonia (NH_3), and sulfur dioxide (SO_2). EPA has reviewed the results, procedures and methodologies for the base year emissions inventory submitted by PADEP. The year 2002 was selected by PADEP as the base year for the emissions inventory per 40 CFR 51.1008(b). A discussion of the emissions inventory development as well as the emissions inventory for the Area can be found in Section III of the November 10, 2009 SIP submittal.

Table 1, below, provides a summary of the annual 2002 emissions of $PM_{2.5}$, PM_{10}, SO_2, NO_X, VOCs, and NH_3 for the Area submittal.

TABLE 1—2002 ANNUAL EMISSIONS

[Tons per year]

Pittsburgh-Beaver Valley Area 2002	$PM_{2.5}$	PM_{10}	SO_2	NO_X	VOC	NH_3
Stationary Point Sources	4868	11149	463501	110618	5157	462
Area Sources	7916	41206	9905	8622	36683	2948
Highway Vehicle Sources	824	1164	1770	53268	25638	1884
Non-Road Sources	1297	1359	1694	25975	13421	8
Totals	14904	54879	476871	198483	80898	5303

The CAA section 172(c)(3) emissions inventory is developed by the incorporation of data from multiple sources. States were required to develop and submit to EPA a triennial emissions inventory according to the Consolidated Emissions Reporting Rule (CERR) for all source categories (i.e., point, area, nonroad mobile and on-road mobile). The review and evaluation of the methods used for the emissions inventory submitted by Pennsylvania are found in the Technical Support Document dated August 12, 2010 available online at *www.regulations.gov,* Docket No. EPA–R03–OAR–2010–0601. EPA finds that the process used to develop this emissions inventory for the Area is adequate to meet the requirements of CAA section 172(c)(3), the implementing regulations, and EPA guidance for emission inventories.

III. Proposed Action

EPA is proposing to approve the 2002 base year emissions inventory portion of the SIP revision submitted by the Commonwealth of Pennsylvania on November 10, 2009 for the Pittsburgh-Beaver Valley Area. We have made the determination that this action is consistent with section 110 of the CAA. EPA is soliciting public comments on the issues discussed in this document. These comments will be considered before taking final action.

IV. Statutory and Executive Order Reviews

Under the CAA, the Administrator is required to approve a SIP submission that complies with the provisions of the CAA and applicable Federal regulations. 42 U.S.C. 7410(k); 40 CFR 52.02(a). Thus, in reviewing SIP submissions, EPA's role is to approve state choices, provided that they meet the criteria of the CAA. Accordingly, this action merely proposes to approve state law as meeting Federal requirements and does not impose additional requirements beyond those imposed by state law. For that reason, this proposed action:

- Is not a ''significant regulatory action'' subject to review by the Office of Management and Budget under Executive Order 12866 (58 FR 51735, October 4, 1993);
- Does not impose an information collection burden under the provisions of the Paperwork Reduction Act (44 U.S.C. 3501 *et seq.*);
- Is certified as not having a significant economic impact on a substantial number of small entities under the Regulatory Flexibility Act (5 U.S.C. 601 *et seq.*);
- Does not contain any unfunded mandate or significantly or uniquely affect small governments, as described in the Unfunded Mandates Reform Act of 1995 (Pub. L. 104–4);
- Does not have Federalism implications as specified in Executive Order 13132 (64 FR 43255, August 10, 1999);
- Is not an economically significant regulatory action based on health or safety risks subject to Executive Order 13045 (62 FR 19885, April 23, 1997);
- Is not a significant regulatory action subject to Executive Order 13211 (66 FR 28355, May 22, 2001);
- Is not subject to requirements of Section 12(d) of the National Technology Transfer and Advancement Act of 1995 (15 U.S.C. 272 note) because application of those requirements would be inconsistent with the CAA; and
- Does not provide EPA with the discretionary authority to address, as appropriate, disproportionate human health or environmental effects, using practicable and legally permissible methods, under Executive Order 12898 (59 FR 7629, February 16, 1994).

In addition, this proposed rule, pertaining to the $PM_{2.5}$ 2002 base year emissions inventory portion of the Pennsylvania SIP for the Pittsburgh-Beaver Valley Area, does not have tribal implications as specified by Executive Order 13175 (65 FR 67249, November 9, 2000), because the SIP is not approved to apply in Indian country located in the state, and EPA notes that it will not impose substantial direct costs on tribal governments or preempt tribal law.

List of Subjects in 40 CFR Part 52

Environmental protection, Air pollution control, Nitrogen dioxide, Particulate matter, Reporting and recordkeeping requirements, Sulfur oxides, Volatile organic compounds.

Authority: 42 U.S.C. 7401 *et seq.*

Dated: September 18, 2012.

W.C. Early,

Acting Regional Administrator, Region III.

[FR Doc. 2012–24380 Filed 10–2–12; 8:45 am]

BILLING CODE 6560–50–P

ENVIRONMENTAL PROTECTION AGENCY

40 CFR Part 63

[EPA–HQ–OAR–2008–0708, FRL–9736–7]

RIN 2060–AQ58

National Emission Standards for Hazardous Air Pollutants for Reciprocating Internal Combustion Engines; New Source Performance Standards for Stationary Internal Combustion Engines

AGENCY: Environmental Protection Agency (EPA).

ACTION: Proposed rule; reopening of comment period.

SUMMARY: The EPA is reopening the public comment period for the proposed amendments to the National Emission Standards for Hazardous Air Pollutants for Stationary Reciprocating Internal Combustion Engines to solicit comment on specific issues raised during the initial public comment period regarding existing engines on offshore vessels.

DATES: *Comments.* Comments must be received on or before November 2, 2012.

ADDRESSES: Submit your comments, identified by Docket ID No. EPA–HQ–OAR–2008–0708, by one of the following methods:

- *www.regulations.gov:* Follow the on-line instructions for submitting comments.
- *Email: a-and-r-docket@epa.gov.*
- *Fax:* (202) 566–1741.
- *Mail:* Air and Radiation Docket and Information Center, Environmental Protection Agency, Mailcode: 2822T, 1200 Pennsylvania Ave. NW., Washington, DC 20460. Please include a total of two copies. The EPA requests a separate copy also be sent to the contact person identified below (see **FOR FURTHER INFORMATION CONTACT**).
- *Hand Delivery:* Air and Radiation Docket and Information Center, U.S. EPA, Room B102, 1301 Constitution Avenue NW., Washington, DC. Such deliveries are only accepted during the Docket's normal hours of operation, and special arrangements should be made for deliveries of boxed information.

Instructions: Direct your comments to Docket ID No. EPA–HQ–OAR–2008–0708. The EPA's policy is that all comments received will be included in the public docket without change and may be made available online at *www.regulations.gov*, including any personal information provided, unless the comment includes information claimed to be Confidential Business Information (CBI) or other information whose disclosure is restricted by statute. Do not submit information that you consider to be CBI or otherwise protected through *www.regulations.gov* or email. The *www.regulations.gov* Web site is an ''anonymous access'' system, which means the EPA will not know your identity or contact information unless you provide it in the body of your comment. If you send an email comment directly to the EPA without going through *www.regulations.gov*, your email address will be automatically captured and included as part of the comment that is placed in the public docket and made available on the Internet. If you submit an electronic comment, the EPA recommends that you include your name and other contact information in the body of your comment and with any disk or CD–ROM you submit. If the EPA cannot read your comment due to technical difficulties and cannot contact you for clarification, the EPA may not be able to consider your comment. Electronic files should avoid the use of special characters, any form of encryption and be free of any defects or viruses.

Docket: All documents in the docket are listed in the *www.regulations.gov* index. The EPA also relies on documents in Docket ID Nos. EPA–HQ–OAR–2002–0059, EPA–HQ–OAR–2005–0029, EPA–HQ–OAR–2005–0030 and EPA–HQ–OAR–2010–0295, and incorporated those dockets into the record for this action. Although listed in the index, some information is not publicly available, e.g., CBI or other information whose disclosure is restricted by statute. Certain other material, such as copyrighted material, will be publicly available only in hard copy. Publicly available docket materials are available either electronically in *www.regulations.gov* or in hard copy at the Air and Radiation Docket, EPA/DC, EPA West, Room 3334, 1301 Constitution Ave. NW., Washington, DC. The Public Reading Room is open from 8:30 a.m. to 4:30 p.m., Monday through Friday, excluding legal holidays. The telephone number for the Public Reading Room is (202) 566–1744, and the telephone number for the Air Docket is (202) 566–1742.

FOR FURTHER INFORMATION CONTACT: Ms. Melanie King, Energy Strategies Group, Sector Policies and Programs Division (D243–01), Environmental Protection Agency, Research Triangle Park, North Carolina 27711; telephone number (919) 541–2469; facsimile number (919) 541–5450; email address *king.melanie@epa.gov.*

SUPPLEMENTARY INFORMATION: On June 7, 2012, the EPA published in the **Federal Register** the proposed rule, ''National Emission Standards for Hazardous Air Pollutants for Reciprocating Internal Combustion Engines; New Source Performance Standards for Stationary Internal Combustion Engines'' (77 FR 33812). The June 7, 2012, action proposed to make specific amendments to the national emission standards for hazardous air pollutants (NESHAP) for stationary reciprocating internal combustion engines (RICE), as well as other regulations. The EPA received comments during the public comment period recommending that the RICE NESHAP be amended such that for any existing compression ignition (CI) RICE on offshore drilling vessels on the Outer Continental Shelf (OCS) that become subject to the RICE NESHAP as a result of the operation of the OCS regulations (40 CFR part 55), such engines may meet the NESHAP through management practices rather than numeric emission limits.[1] This amendment was not contained or contemplated in the proposal that was published on June 7, 2012. However, the comments indicate several significant issues related to application of the NESHAP to regulation of existing marine vessel engines located in the OCS as a result of the OCS regulations; in particular, whether the numerical standards applicable to other CI engines located at area sources (marine vessels located in the OCS are generally located at area sources) are technologically feasible for existing marine engines located in the OCS. Some commenters note specific technological issues relevant to engines on marine vessels in the OCS. Commenters suggest that, to the extent marine vessel engines become subject to the NESHAP as a result of the OCS regulations, they should be subject to generally available control technology (GACT) requirements that they believe are more appropriate for these types of engines. Given the significance of these issues, the EPA believes it is appropriate to request comment on these issues in the context of this rulemaking.

The RICE NESHAP does not on its face apply to mobile sources, including marine vessels. However, OCS Air Regulations, codified at 40 CFR part 55, specify that vessels are OCS sources when they are (1) permanently or temporarily attached to the seabed and erected thereon and used for the purpose of exploring, developing or producing resources therefrom, within the meaning of section 4(a)(1) of the OCS Lands Act (43 U.S.C. § 1331, *et seq.*); or (2) physically attached to an OCS facility, in which case only the stationary sources aspects of the vessels will be regulated. 40 CFR 55.2. In addition, the OCS regulations provide that NESHAP requirements apply to a marine vessel that is an OCS source where the provisions are ''rationally related to the attainment and maintenance of the Federal or State ambient air quality standards or the requirements of part C of title I of the Act.'' 40 CFR 55.13(e). As a result, the commenters have requested that any marine vessel that becomes subject to the requirements of the RICE NESHAP as a result of the operation of 40 CFR part 55, be subject to maintenance-based management practices similar to those proposed for remote spark ignition (SI) engines, rather than the numerical emission limits otherwise applicable. The commenters indicated that these management practices are more appropriate as GACT for existing stationary CI RICE on vessels operating on the OCS. The management practices proposed for remote SI engines and

[1] See document numbers EPA–HQ–OAR–2008–0708–0965 (comment from BHP Billiton Petroleum), EPA–HQ–OAR–2008–0708–1004 at p. 3 (comment from Truck and Engine Manufacturers Association), EPA–HQ–OAR–2008–0708–1020 (comment from Anadarko Petroleum Corporation), EPA–HQ–OAR–2008–0708–1071 (comment from Offshore Operators Committee), EPA–HQ–OAR–2008–0708–1105 at p. 6 (comment from American Petroleum Institute), and EPA–HQ–OAR–2008–0708–1145 at p. 2 (comment from Alaska Oil and Gas Association).

currently required in the rule for smaller CI engines include changing the oil and filter, inspecting the air cleaner or spark plugs and inspecting all hoses and belts within specified intervals. Facilities have the option of using an oil analysis program to extend the oil change requirement. The EPA requests comment on the information provided in the public comments regarding compliance by existing stationary CI RICE on vessels operating on the OCS with the current RICE NESHAP emission limits, in particular, the comments related to technological feasibility.

How can I get copies of this document and other related information?

The EPA has established a docket for the proposed rule, ''National Emission Standards for Hazardous Air Pollutants for Reciprocating Internal Combustion Engines; New Source Performance Standards for Stationary Internal Combustion Engines'' under Docket ID No. EPA–HQ–OAR–2008–0708, available at *www.regulations.gov.*

List of Subjects in 40 CFR Part 63

Environmental Protection, Administrative practice and procedure, Air pollution control, Hazardous substances, Intergovernmental relations, Reporting and recordkeeping requirements.

Dated: September 25, 2012.

Gina McCarthy,

Assistant Administrator.

[FR Doc. 2012–24379 Filed 10–2–12; 8:45 am]

BILLING CODE 6560–50–P

FEDERAL COMMUNICATIONS COMMISSION

47 CFR Part 64

[CG Docket No. 02–278; Report No. 2962]

Petition for Reconsideration of Action in Rulemaking Proceeding

AGENCY: Federal Communications Commission.

ACTION: Petition for reconsideration.

SUMMARY: In this document, Petitions for Reconsideration (Petitions) have been filed in the Commission's Rulemaking proceeding by Kourtney Keough, President/CEO of Marketlink, Inc., on behalf of Marketlink, Inc., Michele A. Shuster, Esq. and Nicholas Whisler, Esq. for Mac Murray, Petersen & Shuster LLP, on behalf of Professional Association for Customer Engagement, and Anthony S. Mendoza, Esq. on behalf of SatCom Marketing, LLC.

DATES: Oppositions to the Petitions must be filed on or before October 18, 2012. Replies to an opposition must be filed on or before October 29, 2012.

DATES: Federal Communications Commission, 445 12th Street SW., Washington, DC 20554.

FOR FURTHER INFORMATION CONTACT: Karen F. Johnson, Consumer and Governmental Affairs Bureau, Consumer Policy Division, at (202) 418–7706 (voice), or email *Karen.Johnson@fcc.gov.*

SUPPLEMENTARY INFORMATION: This is a summary of Commission's document, Report No. 2962, released September 24, 2012. The full text of this document is available for viewing and copying in Room CY–B402, 445 12th Street SW., Washington, DC or may be purchased from the Commission's copy contractor, Best Copy and Printing, Inc. (BCPI) (1–800–378–3160). The Commission will not send a copy of this *Notice* pursuant to the Congressional Review Act, 5 U.S.C. 801(a)(1)(A), because this *Notice* does not have an impact on any rules of particular applicability.

Subject: Marketlink, Inc.'s Petition for Reconsideration and Amendment; Rules and Regulations Implementing the Telephone Consumer Protection Act of 1991, Professional Association for Customer Engagement's Petition for Reconsideration; and Rules and Regulations Implementing the Telephone Consumer Protection Act of 1991, Petition for Reconsideration of SatCom Marketing LLC, Report and Order, published at 77 FR 34233, June 11, 2012, in CG Docket No. 02–278 and published pursuant to 47 CFR 1.429(e) of the Commission's rules. *See also* 47 CFR 1.4(b)(1) of the Commission's rules.

Number of Petitions Filed: 3.

Federal Communications Commission.

Bulah P. Wheeler,

Associate Secretary, Office of the Secretary, Office of Managing Director.

[FR Doc. 2012–24406 Filed 10–2–12; 8:45 am]

BILLING CODE 6712–01–P

DEPARTMENT OF DEFENSE

GENERAL SERVICES ADMINISTRATION

NATIONAL AERONAUTICS AND SPACE ADMINISTRATION

48 CFR Part 53

[FAR Case 2011–018; Docket 2011–0018; Sequence 1]

RIN 9000–AM30

Federal Acquisition Regulation; Positive Law Codification of Title 41

Correction

In proposed rule document 2012–21874, appearing on pages 57950–57979 in the issue of Monday, September 18, 2012, make the following correction:

1. PART 53–FORMS will be printed in its entirety, beginning at § ''53.301.25 Performance Board'', on page 57979.

PART 53—FORMS [CORRECTED]

53.301–25 Performance Bond.

BILLING CODE 6820–14–P

PERFORMANCE BOND *(See instructions on reverse)*	DATE BOND EXECUTED *(Must be same or later than date of contract)*	OMB Number: 9000-0045 Expiration Date: 11/30/2012

Public reporting burden for this collection of information is estimated to average 25 minutes per response, including the time for reviewing instructions, searching existing data sources, gathering and maintaining the data needed, and completing and reviewing the collection of information. Send comments regarding this burden estimate or any other aspect of this collection of information, including suggestions for reducing this burden, to the Regulatory Secretariat Division (MVCB), GSA, Washington, DC 20417.

PRINCIPAL *(Legal name and business address)*	TYPE OF ORGANIZATION ("X" one) ☐ INDIVIDUAL ☐ PARTNERSHIP ☐ JOINT VENTURE ☐ CORPORATION STATE OF INCORPORATION
SURETY(IES) *(Name(s) and business address(es)*	PENAL SUM OF BOND: MILLION(S) / THOUSANDS / HUNDRED(S) / CENTS CONTRACT DATE / CONTRACT NO.

OBLIGATION

We, the Principal and Surety (ies), are firmly bound to the United States of America (hereinafter called the Government) in the above penal sum. For payment of the penal sum, we bind ourselves, our heirs, executors, administrators, and successors, jointly and severally. However, where the Sureties are corporations acting as co-sureties, bind ourselves in such sum "jointly and severally" as well as "severally" only for the purpose of allowing a joint action against any or all of us. for all other purposes, each Surety binds itself, jointly and severally with the Principal, for the payment of the sum shown opposite the name of the Surety. If no limit of liability is indicated, the limit of liability is the full amount of the penal sum.

CONDITIONS

The Principal has entered into the contract identified above.

THEREFORE

The above obligation is void if the Principal-

(a)(1) Performs and fulfills all the undertaking, covenants, terms, conditions, and agreements of the contract during the original term of the contract and any extensions thereof that are granted by the Government, with or without notice of the Surety(ies) and during the life of any guaranty required under the contract, and (2) performs and fulfills all the undertakings, covenants, terms conditions, and agreements of any and all duly authorized modifications of the contract that hereafter are made. Notice of those modifications to the Surety(ies) are waived.

(b) Pays to the Government the full amount of the taxes imposed by the Government, if the said contract is subject to 40 U.S.C. chapter 31, subchapter III, Bonds, which are collected, deducted, or withheld from wages paid by the Principal in carrying out the construction contract with respect to which this bond is furnished.

WITNESS

The Principal and Surety(ies) executed this performance bond and affixed their seals on the above date.

PRINCIPAL

SIGNATURE(S)	1. (Seal)	2. (Seal)	3. (Seal)	Corporate Seal
NAME(S) & TITLE(S) *(Typed)*	1.	2.	3.	

INDIVIDUAL SURETY(IES)

SIGNATURE(S)	1. (Seal)	2. (Seal)
NAME(S) *(Typed)*	1.	2.

CORPORATE SURETY(IES)

SURETY A	NAME & ADDRESS		STATE OF INC.	LIABILITY LIMIT ($)	Corporate Seal
	SIGNATURE(S)	1.	2.		
	NAME(S) & TITLE(S *(Typed)*	1.	2.		

AUTHORIZED FOR LOCAL REPRODUCTION
Previous edition not usable

STANDARD FORM 25 (REV. 2/2012)
Prescribed by GSA-FAR (48 CFR) 53.228 (b)

CORPORATE SURETY(IES) *(Continued)*

SURETY B	NAME & ADDRESS		STATE OF INC.	LIABILITY LIMIT ($)	Corporate Seal
	SIGNATURE(S)	1.	2.		
	NAME(S) & TITLE(S) *(Typed)*	1.	2.		
SURETY C	NAME & ADDRESS		STATE OF INC.	LIABILITY LIMIT ($)	Corporate Seal
	SIGNATURE(S)	1.	2.		
	NAME(S) & TITLE(S) *(Typed)*	1.	2.		
SURETY D	NAME & ADDRESS		STATE OF INC.	LIABILITY LIMIT ($)	Corporate Seal
	SIGNATURE(S)	1.	2.		
	NAME(S) & TITLE(S) *(Typed)*	1.	2.		
SURETY E	NAME & ADDRESS		STATE OF INC.	LIABILITY LIMIT ($)	Corporate Seal
	SIGNATURE(S)	1.	2.		
	NAME(S) & TITLE(S) *(Typed)*	1.	2.		
SURETY F	NAME & ADDRESS		STATE OF INC.	LIABILITY LIMIT ($)	Corporate Seal
	SIGNATURE(S)	1.	2.		
	NAME(S) & TITLE(S) *(Typed)*	1.	2.		
SURETY G	NAME & ADDRESS		STATE OF INC.	LIABILITY LIMIT ($)	Corporate Seal
	SIGNATURE(S)	1.	2.		
	NAME(S) & TITLE(S) *(Typed)*	1.	2.		

BOND PREMIUM ▶	RATE PER THOUSAND ($)	TOTAL ($)

INSTRUCTIONS

1. This form is authorized for use in connection with Government contracts. Any deviation from this form will require the written approval of the Administrator of General Services.

2. Insert the full legal name and business address of the Principal in the space designated "Principal" on the face of the form. An authorized person shall sign the bond. Any person signing in a representative capacity (e.g., and attorney-in-fact) must furnish evidence of authority if that representative is not a member of the firm, partnership, or joint venture, or an officer of the corporation involved.

3. (a) Corporations executing the bond as sureties must appear on the department of the Treasury's list of approved sureties and must act within the limitation listen therein. Where more than one corporate surety is involved, their names and addresses shall appear in the spaces (Surety A, Surety B, etc.) headed "CORPORATE SURETY(IES)." In the space designated "SURETY(IES)" on the face of the form, insert only the letter identification of the sureties.

(b) Where individual sureties are involved, a completed Affidavit of Individual Surety (standard Form 28) for each individual surety, shall accompany the bond. The Government may require the surety to furnish additional substantiating information concerning their financial capability.

4. Corporation executing the bond shall affix their corporate seals. Individual shall execute the bond opposite the word " Corporate Seal", and shall affix an adhesive seal if executed in Maine, New Hampshire, or any other jurisdiction requiring adhesive seals.

5. Type the name and title of each person signing this bond in the space provided.

379. Revise section 53.301–25A to read as follows:

53.301–25A Payment Bond.

PAYMENT BOND *(See instructions on reverse)*	DATE BOND EXECUTED *(Must be same or later than date of contract)*	**OMB Number: 9000-0045** **Expiration Date: 11/30/2012**

Public reporting burden for this collection of information is estimate to average 25 minutes per response, including the time for reviewing instructions, searching existing data sources, gathering and maintaining the data needed, and completing and reviewing the collection of information. Send comments regarding this burden estimate or any other aspect of this collection of information, including suggestions for reducing this burden, to the Regulatory Secretariat Division (MVCB), GSA, Washington, DC 20417.

PRINCIPAL *(Legal name and business address)*	TYPE OF ORGANIZATION *("X" one)* ☐ INDIVIDUAL ☐ PARTNERSHIP ☐ JOINT VENTURE ☐ CORPORATION
	STATE OF INCORPORATION
SURETY(IES) *(Name(s) and business address(es)*	PENAL SUM OF BOND: MILLION(S) / THOUSAND(S) / HUNDRED(S) / CENTS
	CONTRACT DATE / CONTRACT NO.

OBLIGATION:

We, the Principal and Surety(ies), are firmly bound to the United States of America (hereinafter called the Government) in the above penal sum. for payment of the penal sum, we bind ourselves, our heirs, executors, administrators, and successors, jointly and severally. However, where the Sureties are corporations acting as co-sureties, we, the Sureties, bind ourselves in such sum "jointly and severally" as well as "severally" only for the purpose of allowing a joint action or actions against any or all of us. For all other purposes, each Surety binds itself, jointly and severally with the Principal, for the payment of the sum shown opposite the name of the Surety. If no limit is indicated, the limit of liability is the full amount of the penal sum.

CONDITIONS:

The above obligation is void if the Principal promptly makes payment to all persons having a direct relationship with the Principal or a subcontractor of the Principal for furnishing labor, material or both in the prosecution of the work provided for in the contract identified above, and any authorized modifications of the contract that subsequently are made. Notice of those modifications to the Surety(ies) are waived.

WITNESS:

The Principal and Surety(ies) executed this payment bond and affixed their seals on the above date.

PRINCIPAL				
SIGNATURE(S)	1. (Seal)	2. (Seal)	3. (Seal)	Corporate Seal
NAME(S) & TITLE(S) *(Typed)*	1.	2.	3.	

INDIVIDUAL SURETY(IES)		
SIGNATURE(S)	1. (Seal)	2. (Seal)
NAME(S) *(Typed)*	1.	2.

CORPORATE SURETY(IES)					
SURETY A	NAME & ADDRESS		STATE OF INC.	LIABILITY LIMIT $	Corporate Seal
	SIGNATURE(S)	1.	2.		
	NAME(S) & TITLE(S) *(Typed)*	1.	2.		

AUTHORIZED FOR LOCAL REPRODUCTION
Previous edition is usable

STANDARD FORM 25A (REV. 2/2012)
Prescribed by GSA-FAR (48 CFR) 53.2228(c)

CORPORATE SURETY(IES) *(Continued)*

SURETY B	NAME & ADDRESS		STATE OF INC.	LIABILITY LIMIT $	Corporate Seal
	SIGNATURE(S)	1.	2.		
	NAME(S) & TITLE(S) *(Typed)*	1.	2.		
SURETY C	NAME & ADDRESS		STATE OF INC.	LIABILITY LIMIT $	Corporate Seal
	SIGNATURE(S)	1.	2.		
	NAME(S) & TITLE(S) *(Typed)*	1.	2.		
SURETY D	NAME & ADDRESS		STATE OF INC.	LIABILITY LIMIT $	Corporate Seal
	SIGNATURE(S)	1.	2.		
	NAME(S) & TITLE(S) *(Typed)*	1.	2.		
SURETY E	NAME & ADDRESS		STATE OF INC.	LIABILITY LIMIT $	Corporate Seal
	SIGNATURE(S)	1.	2.		
	NAME(S) & TITLE(S) *(Typed)*	1.	2.		
SURETY F	NAME & ADDRESS		STATE OF INC.	LIABILITY LIMIT $	Corporate Seal
	SIGNATURE(S)	1.	2.		
	NAME(S) & TITLE(S) *(Typed)*	1.	2.		
SURETY G	NAME & ADDRESS		STATE OF INC.	LIABILITY LIMIT $	Corporate Seal
	SIGNATURE(S)	1.	2.		
	NAME(S) & TITLE(S) *(Typed)*	1.	2.		

INSTRUCTIONS

1. This form, for the protection of persons supplying labor and material, is used when a payment bond is required under 40 U.S.C. chapter 31, subchapter III, Bonds. Any deviation from this form will require the written approval of the Administrator of General Services.

2. Insert the full legal name and business address of the Principal in the space designated "Principal" on the face of the form. An authorized person shall sign the bond. Any person signing in a representative capacity (e.g., an attorney-in-fact) must furnish evidence of authority if that representative is not a member of the firm, partnership, or joint venture, or an officer of the corporation involved.

3. (a) Corporations executing the bond as sureties must appear on the Department of the Treasury's list of approved sureties and must act within the limitation listed therein. Where more than one corporate surety is involved, their names and addresses shall appear in the spaces (Surety A, Surety B, etc.) headed "CORPORATE SURETY(IES)." In the space designated "SURETY(IES)" on the face of the form, insert only the letter identification of the sureties.

(b) Where individual sureties are involved, a completed Affidavit of Individual Surety (Standard Form 28) for each individual surety, shall accompany the bond. The Government may require the surety to furnish additional substantiating information concerning their financial capability.

4. Corporations executing the bond shall affix their corporate seals. Individuals shall execute the bond opposite the word "Corporate Seal", and shall affix an adhesive seal if executed in Maine, New Hampshire, or any other jurisdiction requiring adhesive seals.

5. Type the name and title of each person signing this bond in the space provided.

380. Revise section 53.301–26 to read as follows:

53.301–26 Award/Contract.

AWARD/CONTRACT	1. THIS CONTRACT IS A RATED ORDER UNDER DPAS (15 CFR 700) ▶	RATING	PAGE OF PAGES
2. CONTRACT *(Proc. Inst. Indent.)* NO.	3. EFFECTIVE DATE	4. REQUISITION/PURCHASE REQUEST/PROJECT NO.	
5. ISSUED BY CODE	6. ADMINISTERED BY *(If other than Item 5)* CODE		
7. NAME AND ADDRESS OF CONTRACTOR *(No., street, county, State and ZIP Code)*		8. DELIVERY ☐ FOB ORIGIN ☐ OTHER *(See below)*	
		9. DISCOUNT FOR PROMPT PAYMENT	
CODE	FACILITY CODE	10. SUBMIT INVOICES *(4 copies unless otherwise specified)* TO THE ADDRESS SHOWN IN ▶	ITEM
11. SHIP TO/MARK FOR CODE	12. PAYMENT WILL BE MADE BY CODE		
13. AUTHORITY FOR USING OTHER THAN FULL AND OPEN COMPETITION: ☐ 10 U.S.C. 2304(c)( ) ☐ 41 U.S.C. 3304 (a) ( )	14. ACCOUNTING AND APPROPRIATION DATA		

15A. ITEM NO.	15B. SUPPLIES/SERVICES	15C. QUANTITY	15D.UNIT	15E. UNIT PRICE	15F. AMOUNT
				15G. TOTAL AMOUNT OF CONTRACT ▶	$

16. TABLE OF CONTENTS

(X)	SEC.	DESCRIPTION	PAGE(S)	(X)	SEC.	DESCRIPTION	PAGE(S)
		PART I - THE SCHEDULE				PART II - CONTRACT CLAUSES	
	A	SOLICITATION/CONTRACT FORM			I	CONTRACT CLAUSES	
	B	SUPPLIES OR SERVICES AND PRICES/COSTS				PART III - LIST OF DOCUMENTS, EXHIBITS AND OTHER ATTACH.	
	C	DESCRIPTION/SPECS./WORK STATEMENT			J	LIST OF ATTACHMENTS	
	D	PACKAGING AND MARKING				PART IV - REPRESENTATIONS AND INSTRUCTIONS	
	E	INSPECTION AND ACCEPTANCE			K	REPRESENTATIONS, CERTIFICATIONS AND OTHER STATEMENTS OF OFFERORS	
	F	DELIVERIES OR PERFORMANCE					
	G	CONTRACT ADMINISTRATION DATA			L	INSTRS., CONDS., AND NOTICES TO OFFERORS	
	H	SPECIAL CONTRACT REQUIREMENTS			M	EVALUATION FACTORS FOR AWARD	

CONTRACTING OFFICER WILL COMPLETE ITEM 17 (SEALED-BID OR NEGOTIATED PROCUREMENT) OR 18 (SEALED-BID PROCUREMENT) AS APPLICABLE

17. ☐ CONTRACTOR'S NEGOTIATED AGREEMENT *(Contractor is required to sign this document and return _____ copies to issuing office.)* Contractor agrees to furnish and deliver all items or perform all the services set forth or otherwise identified above and on any continuation sheets for the consideration stated herein. The rights and obligations of the parties to this contract shall be subject to and governed by the following documents: (a) this award/contract, (b) the solicitation, if any, and (c) such provisions, representations, certifications, and specifications, as are attached or incorporated by reference herein. *(Attachments are listed herein.)*	18. ☐ SEALED-BID AWARD (*Contractor is not required to sign this document.)* Your bid on Solicitation Number _____, including the additions or changes made by you which additions or changes are set forth in full above, is hereby accepted as to the terms listed above and on any continuation sheets. This award consummates the contract which consists of the following documents: (a) the Government's solicitation and your bid, and (b) this award/contract. No further contractual document is necessary. (Block 18 should be checked only when awarding a sealed-bid contract.)
19A. NAME AND TITLE OF SIGNER *(Type or Print)*	20A. NAME OF CONTRACTING OFFICER
19B. NAME OF CONTRACTOR BY _____ *(Signature of person authorized to sign)* — 19C. DATE SIGNED	20B. UNITED STATES OF AMERICA BY _____ *(Signature of Contracting Officer)* — 20C. DATE SIGNED

AUTHORIZED FOR LOCAL REPRODUCTION
Previous edition is NOT usable

STANDARD FORM 26 (REV. 3/2012)
Prescribed by GSA - FAR (48 CFR) 53.214(a)

381. Revise section 53.301–273 to read as follows:

53.301–273 Reinsurance Agreement For A Bonds Statute Peformance Bond.

REINSURANCE AGREEMENT FOR A BONDS STATUTE PERFORMANCE BOND
(See instructions on reverse)

OMB Number: 9000-0045
Expiration Date: 11/30/2012

Public reporting burden for this collection of information is estimated to average 25 minutes per response, including the time for reviewing instructions, searching existing data sources, gathering and maintaining the data needed, and completing and reviewing the collection of information. Send comments regarding this burden estimate or any other aspect of this collection of information, including suggestions for reducing this burden, to the Regulatory Secretariat Division (MVCB), GSA, Washington, DC 20417.

1. DIRECT WRITING COMPANY*	1A. DATE DIRECT WRITING COMPANY EXECUTES THIS AGREEMENT
	1B. STATE OF INCORPORATION
2. REINSURING COMPANY*	2A. AMOUNT OF THIS REINSURANCE ($)
	2B. DATE REINSURING COMPANY EXECUTES THIS AGREEMENT
	2C. STATE OF INCORPORATION

3. DESCRIPTION OF CONTRACT		4. DESCRIPTION OF BOND	
3A. AMOUNT OF CONTRACT		4A. PENAL SUM OF BOND	
3B. CONTRACT DATE	3C. CONTRACT NUMBER	4B. DATE OF BOND	4C. BOND NUMBER
3D. DESCRIPTION OF CONTRACT		4D. PRINCIPAL*	
3E. CONTRACTING AGENCY		4E. STATE OF INCORPORATION *(If Corporate Principal)*	

AGREEMENT:

(a) The Direct Writing Company named above is bound as surety to the United States of America on the performance bond described above, wherein the above described is the principal, for the protection of the United States on the contract described above. The contract is for the construction, alteration, or repair of a public building or public work of the United States and the performance bond was furnished to the United States under the Act of August 24, 1935, as amended (40 U.S.C. chapter 31, subchapter III), known as the Bonds Statute. The Direct Writing Company has applied to the Reinsuring Company named above to be reinsured and counter secured in the amount shown opposite the name of the Reinsuring Company (referred to as the "Amount of this Reinsurance"), or for whatever amount less than the "Amount of this Reinsurance" the Direct Writing Company is liable to pay under or by virtue of the performance bond.

(b) For a sum mutually agreed upon, paid by the Direct Writing Company to the Reinsuring Company which acknowledges its receipt, the parties to this Agreement covenant and agree to the terms and conditions of the agreement.

TERMS AND CONDITIONS:

(a) The purpose and intent of this agreement is to guarantee and indemnify the United States against loss under the performance and to the extent of the "Amount of this Reinsurance," or any sum less than the "Amount of this Reinsurance" that is owing and unpaid by the Direct Writing Company to the United States under the performance bond.

(b) If the Direct Writing Company fails to pay any default under the performance bond equal to or in excess of the "Amount of this Reinsurance," the Reinsuring Company covenants and agrees to pay to the United States, the obligee on the performance bond, the "Amount of this Reinsurance." If the Direct Writing Company fails to pay to the United States any default for a sum less than the "Amount of this Reinsurance" the Reinsuring Company covenants and agrees to pay to the United States the full amount of the default, or so much thereof that is not paid to the United States by the Direct Writing Company.

(c) If there is a default on the performance bond for the "Amount of this Reinsurance," or more, the Reinsuring Company and the Direct Writing Company hereby covenant and agree that the United States may bring suit against the Reinsuring Company for the "Amount of this Reinsurance" or, in case the amount of the default is for less than the "Amount of this Reinsurance," for the full amount of the default.

WITNESS:

The Direct Writing Company and the Reinsuring Company, respectively, have caused this Agreement to be signed and impressed with their respective corporate seals by offices possessing power to sign this instrument, and to be duly attested by officers empowered thereto, on the day and date above written opposite their respective names.

**Items 1, 2, 4D - Furnish legal name, business address and ZIP Code.* *(Over)*

AUTHORIZED FOR LOCAL REPRODUCTION
Previous edition is usable

STANDARD FORM 273 (REV. 2/2012)
Prescribed by GSA - FAR (48 CFR) 53.228(h)

5. DIRECT WRITING COMPANY		
5A(1) SIGNATURE	(2) ATTEST: SIGNATURE	*Corporate Seal*
5B(1) NAME AND TITLE *(Typed)*	(2) NAME AND TITLE *(Typed)*	
6. REINSURING COMPANY		
6A (1) SIGNATURE	(2) ATTEST: SIGNATURE	*Corporate Seal*
6B(1) NAME AND TITLE *(Typed)*	(2) NAME AND TITLE *(Typed)*	

INSTRUCTIONS

This form is to be used in cases where it is desired to cover the excess of a Direct Writing Company's underwriting limitation by reinsurance instead of co-insurance on Bonds Statute performance bonds running to the United States. See FAR (48 CFR) 28.202-1 and 53.228(h).

Execute and file this form as follows:

Original and copies (as specified by the bond-approving officer), signed and sealed, shall accompany the bond or be filed within the time period shown in the bid or proposal.

One carbon copy, signed and sealed, shall accompany the Direct Writing Company's quarterly Schedule of Excess Risks filed with the Department of the Treasury.

Other copies may be prepared for the use of the Direct Writing Company and Reinsuring Company. Each Reinsuring Company should use a separate form.

382. Revise section 53.301–274 to read as follows:

53.301–274 Reinsurance Agreement For A Bonds Statute Payment Bond.

REINSURANCE AGREEMENT FOR A BONDS STATUTE PAYMENT BOND
(See instruction on reverse)

OMB Number: 9000-0045
Expiration Date: 11/30/2012

Public reporting burden for this collection of information is estimated to average 25 minutes per response, including the time for reviewing instructions, searching existing data sources, gathering and maintaining the data needed, and completing and reviewing the collection of information. Send comments regarding this burden estimate or any other aspect of this collection of information, including suggestions for reducing this burden, to the Regulatory Secretariat Division (MVCB), GSA, Washington, DC 20417.

1. DIRECT WRITING COMPANY*	1A. DATE DIRECT WRITING COMPANY EXECUTES THIS AGREEMENT
	1B. STATE OF INCORPORATION
2. REINSURING COMPANY*	2A. AMOUNT OF THIS REINSURANCE $
	2B. DATE REINSURING COMPANY EXECUTES THIS AGREEMENT
	2C. STATE OF INCORPORATION

3. DESCRIPTION OF CONTRACT		4. DESCRIPTION OF BOND	
3A. AMOUNT OF CONTRACT		4A. PENAL SUM OF BOND	
3B. CONTRACT DATE	3C. CONTRACT NO.	4B. DATE OF BOND	4C. BOND NO.
3D. DESCRIPTION OF CONTRACT		4D. PRINCIPAL*	
3E. CONTRACTING AGENCY		4E. STATE OF INCORPORATION *(If Corporate Principal)*	

AGREEMENT:

(a) The Direct Writing Company named above is bound as a surety on the payment bond described above, wherein the above described is the principal, for the protection of all persons supplying labor and material on the contract described above, which is for the construction, alteration, or repair of a public building or public work of the United States. The payment bond is for the use of persons supplying labor or material, and is furnished to the United States under the Act of August 24, 1935, as amended (40 U.S.C. chapter 31, subchapter III, Bonds), known as the Bonds Statute. The Direct Writing Company has applied to the Reinsuring Company named above to be reinsured and counter-secured in the amount above opposite the name of the Reinsuring Company (referred to as "Amount of this Reinsurance"), or for whatever amount less than the "Amount of this Reinsurance" the Direct Writing Company is liable to pay under or by virtue of the payments bond.

(b) For a sum mutually agreed upon, paid by the Direct Writing Company to the Reinsuring Company which acknowledges its receipt, the parties to this Agreement covenant and agree to the terms and conditions of this agreement.

TERMS AND CONDITIONS:

The purpose and intent of this agreement is (a) to guarantee and indemnify the persons who have furnished to supplied labor or material in the prosecution of the work provided for in the contract referred to above (hereinafter referred to as "laborers and materialmen," the term "materialmen" including persons having a direct contractual relation with a subcontractor but no contractual relationship expressed or implied with the contractor who has furnished the said payment bond) against loss under the payment bond to the extent of the "amount of this Reinsurance," or for any sum less than the "Amount of this Reinsurance," that is owing and unpaid by the Direct Writing Company to the "laborers and materialmen" on the payment bond; and (b) to make the "laborers and materialmen" obligees under this Reinsurance Agreement to the same extent as if their respective names were written herein.

THEREFORE:

1. The Reinsuring Company covenants and agrees -

(a) To pay the "Amount of this Reinsurance" to the "laborers and materialmen" in the event of the Direct Writing Company's failure to pay to the "laborers and materialmen" any default under the payment bond equal to or in excess of the "Amount of this Reinsurance"; and

(b) To pay (1) the full amount to the "laborers and materialmen," or (2) the amount not paid to them by the Direct Writing Company; in case the Direct Writing Company fails to pay the "laborers and materialmen" any default under the payment bond less than the "Amount of this Reinsurance.

*Items 1, 2 ,4D - furnished legal name, business address and ZIP Code. *(Over)*

AUTHORIZED FOR LOCAL REPRODUCTION
Previous edition is usable

STANDARD FORM 274 (REV. 2/2012)
Prescribed by GSA - FAR (48 CFR) 53.228(i)

2. The Reinsuring Company and the Direct Writing Company covenant and agree that, in the case of default on the payment bond for the "Amount of this Reinsurance," or more, the persons given a "right of action" or a "right to sue" on the payment bond by section 2(a) of the Miller Act (40 U.S.C. 270b(a)) may bring suit against the Reinsuring Company in the United States District Court for the district in which the contract described above is to be performed and executed for the "Amount of this Reinsurance" or, if the amount of the default is for less than the "Amount of this Reinsurance," for whatever the full amount of the default may be. The Reinsuring Company further covenants and agrees to comply with all requirements necessary to give such court jurisdiction, and to consent to determination of matters arising under this Reinsurance Agreement in accordance with the law and practice of the court. It is expressly understood by the parties that the rights, powers, and privileges which they might have under the statutes of the United States, any States, or the other laws of ether, and should not be construed as limitations.

3. The Reinsuring Company and the Direct Writing Company further covenant and agree that the Reinsuring Company designates the process agent, appointed by the Direct Writing Company in the district in which the contract is to be performed and executed, as an agent to accept service of process in any suit instituted on this Reinsurance Agreement, and that the process agent shall send, by registered mail, to the Reinsuring Company at its principal place of business shown above, a copy of the process.

4. The Reinsuring Company and the Direct Writing Company further covenant and agree that this Reinsurance Agreement is an integral part of the payment bond.

WITNESS:

The Direct Writing Company and the Reinsuring Company, respectively, have caused this Agreement to be signed and impressed with their respective corporate seals by officers possessing the power to sign this instrument, and to be duly attested to by officers empowered thereto, on the day and date in Item 1A written opposite their respective names.

5. DIRECT WRITING COMPANY		
5A. (1) SIGNATURE	(2) ATTEST SIGNATURE	*Corporate Seal*
5B. (1) NAME AND TITLE *(Typed)*	(2) NAME AND TITLE *(Typed)*	

6. REINSURING COMPANY		
6A. (1) SIGNATURE	(2) ATTEST SIGNATURE	*Corporate Seal*
6B. (1) NAME AND TITLE *(Typed)*	(2) NAME AND TITLE *(Typed)*	

INSTRUCTIONS

This form is to be used in cases where it is desired to cover the excess of a Direct Writing Company's underwriting limitation by reinsurance instead of co-insurance on Bonds Statute payment bonds running to the United States. See FAR (48 CFR) 28.202-1 and 53.228(i).

Execute and file this form as follows:

Original and copies (as specified by the bond-approving officer), signed and sealed, shall accompany the bond or be filed within the time period shown in bid or proposal.

One carbon copy, signed and sealed, shall accompany the Direct Writing Company's quarterly Schedule of Excess Risks filled with the Department of Treasury.

Other copies may be prepared for the use of the Direct Writing Company and Reinsuring Company. Each Reinsuring Company should use a separate form.

STANDARD FORM 274 (REV. 2/2012) **BACK**

383. Revise section 53.301–308 to read as follows:

53.301–308 Request For Wage Determination And Response To Request.

Request For Wage Determination And Response To Request
(Construction Wage Rate Requirements Statute and Related Statutes)

U.S. Department of Labor
Employment Standards Administration
Wage and Hour Division

FOR DEPARTMENT OF LABOR USE

Response To Request

☐ Use area determination issued for this area

_____

_____

☐ The attached decision noted below is applicable to this project

Decision Number

Date of Decision

Expires

Supersedes Decision Number

Approved

Mail Your Request To:
U.S. Department of Labor
Employment Standards Administration
Wage and Hour Division
Branch of Construction Contract Wage Determinations
Washington, D.C. 20210

Requesting Officer (Typed name *and signature*)

Department, Agency, or Bureau		Phone Number
Date of Request	Estimated Advertising Date	Estimated Bid Opening Date
Prior Decision Number (if any)	Estimated $ Value of Contract ☐ Under 1/2 Mil ☐ 1 to 5 Mil ☐ 1/2 to 1 Mil ☐ Over 5 Mil	Type of Work ☐ Bldg. ☐ Highway ☐ Resid. ☐ Heavy

Address to which wage determination should be mailed. (Print or type)

Location of Project *(City, County, State, Zip Code)*

Description of Work *(Be specific) (Print of type)*

CHECK OR LIST CRAFTS NEEDED
(Attach continuation sheet if needed)

_____ Asbestos workers
_____ Boilermakers
_____ Bricklayers
_____ Carpenters
_____ Cement masons
_____ Electricians
_____ Glaziers
_____ Ironworkers
_____ Laborers (Specify classes)
_____ _____
_____ _____
_____ _____
_____ Lathers
_____ Marble & tile setters, terrazzo workers
_____ Painters
_____ Piledrivermen
_____ Plasterers
_____ Plumbers
_____ Roofers
_____ Sheet metal workers
_____ Soft floor layers
_____ Steamfitters
_____ Welders-rate for craft
_____ Truck drivers
_____ Power equipment operators *(Specify types)*
_____ _____
_____ _____
_____ _____
_____ _____
_____ _____
_____ _____

Other Crafts
_____ _____
_____ _____
_____ _____
_____ _____

Standard Form 308 (Rev. 1/2012)
U.S. Department of Labor -29 CFR Part 1

384. Revise section 53.301–330 to read as follows:

53.301–330 Architect-Engineer Qualifications.

ARCHITECT-ENGINEER QUALIFICATIONS

OMB Number.: 9000-0157
Expiration Date: 11/30/2012

Public reporting burden for this collection of information is estimated to average a total of 29 hours per response (25 hours for Part 1 and 4 hours for Part 2), including the time for reviewing instructions, searching existing data sources, gathering and maintaining the data needed, and completing and reviewing the collection of information. Send comments regarding this burden estimate or any other aspect of this collection of information, including suggestions for reducing this burden, to the Regulatory Secretariat Division (MVCB), GSA, Washington, DC 20417.

PURPOSE

Federal agencies use this form to obtain information from architect-engineer (A-E) firms about their professional qualifications. Federal agencies select firms for A-E contracts on the basis of professional qualifications as required by (40 U.S.C. chapter 11, Selection of Architects and Engineers) and Part 36 of the Federal Acquisition Regulation (FAR).

The Selection of Architects and Engineers statute requires the public announcement of requirements for A-E services (with some exceptions provided by other statutes), and the selection of at least three of the most highly qualified firms based on demonstrated competence and professional qualifications according to specific criteria published in the announcement. The statute then requires the negotiation of a contract at a fair and reasonable price starting first with the most highly qualified firm.

The information used to evaluate firms is from this form and other sources, including performance evaluations, any additional data requested by the agency, and interviews with the most highly qualified firms and their references.

GENERAL INSTRUCTIONS

Part I presents the qualifications for a specific contract.

Part II presents the general qualifications of a firm or a specific branch office of a firm. Part II has two uses:

1. An A-E firm may submit Part II to the appropriate central, regional or local office of each Federal agency to be kept on file. A public announcement is not required for certain contracts, and agencies may use Part II as a basis for selecting at least three of the most highly qualified firms for discussions prior to requesting submission of Part I. Firms are encouraged to update Part II on file with agency offices, as appropriate, according to FAR Part 36. If a firm has branch offices, submit a separate Part II for each branch office seeking work.

2. Prepare a separate Part II for each firm that will be part of the team proposed for a specific contract and submitted with Part I. If a firm has branch offices, submit a separate Part II for each branch office that has a key role on the team.

INDIVIDUAL AGENCY INSTRUCTIONS

Individual agencies may supplement these instructions. For example, they may limit the number of projects or number of pages submitted in Part I in response to a public announcement for a particular project. Carefully comply with any agency instructions when preparing and submitting this form. Be as concise as possible and provide only the information requested by the agency.

DEFINITIONS

Architect-Engineer Services: Defined in FAR 2.101.

Branch Office: A geographically distinct place of business or subsidiary office of a firm that has a key role on the team.

Discipline: Primary technical capabilities of key personnel, as evidenced by academic degree, professional registration, certification, and/or extensive experience.

Firm: Defined in FAR 36.102.

Key Personnel: Individuals who will have major contract responsibilities and/or provide unusual or unique expertise.

SPECIFIC INSTRUCTIONS

Part I - Contract-Specific Qualifications

Section A. Contract Information.

1. Title and Location. Enter the title and location of the contract for which this form is being submitted, exactly as shown in the public announcement or agency request.

2. Public Notice Date. Enter the posted date of the agency's notice on the Federal Business Opportunity website (FedBizOpps), other form of public announcement or agency request for this contract.

3. Solicitation or Project Number. Enter the agency's solicitation number and/or project number, if applicable, exactly as shown in the public announcement or agency request for this contract.

Section B. Architect-Engineer Point of Contact.

4-8. Name, Title, Name of Firm, Telephone Number, Fax (Facsimile) Number and E-mail (Electronic Mail) Address. Provide information for a representative of the prime contractor or joint venture that the agency can contact for additional information.

Section C. Proposed Team.

9-11. Firm Name, Address, and Role in This Contract. Provide the contractual relationship, name, full mailing address, and a brief description of the role of each firm that will be involved in performance of this contract. List the prime contractor or joint venture partners first. If a firm has branch offices, indicate each individual branch office that will have a key role on the team. The named subcontractors and outside associates or consultants must be used, and any change must be approved by the contracting officer. (See FAR Part 52 Clause "Subcontractors and Outside Associates and Consultants (Architect-Engineer Services)".) Attach an additional sheet in the same format as Section C if needed.

Section D. Organizational Chart of Proposed Team.

As an attachment after Section C, present an organizational chart of the proposed team showing the names and roles of all key personnel listed in Section E and the firm they are associated with as listed in Section C.

Section E. Resumes of Key Personnel Proposed for This Contract.

Complete this section for each key person who will participate in this contract. Group by firm, with personnel of the prime contractor or joint venture partner firms first. The following blocks must be completed for each resume:

12. Name. Self-explanatory.

13. Role in This Contract. Self-explanatory.

14. Years Experience. Total years of relevant experience (block 14a), and years of relevant experience with current firm, but not necessarily the same branch office (block 14b).

15. Firm Name and Location. Name, city and state of the firm where the person currently works, which must correspond with one of the firms (or branch office of a firm, if appropriate) listed in Section C.

16. Education. Provide information on the highest relevant academic degree(s) received. Indicate the area(s) of specialization for each degree.

17. Current Professional Registration. Provide information on current relevant professional registration(s) in a State or possession of the United States, Puerto Rico, or the District of Columbia according to FAR Part 36.

18. Other Professional Qualifications. Provide information on any other professional qualifications relating to this contract, such as education, professional registration, publications, organizational memberships, certifications, training, awards, and foreign language capabilities.

19. Relevant Projects. Provide information on up to five projects in which the person had a significant role that demonstrates the person's capability relevant to her/his proposed role in this contract. These projects do not necessarily have to be any of the projects presented in Section F for the project team if the person was not involved in any of those projects or the person worked on other projects that were more relevant than the team projects in Section F. Use the check box provided to indicate if the project was performed with any office of the current firm. If any of the professional services or construction projects are not complete, leave Year Completed blank and indicate the status in Brief Description and Specific Role (block (3)).

Section F. Example Projects Which Best Illustrate Proposed Team's Qualifications for This Contract.

Select projects where multiple team members worked together, if possible, that demonstrate the team's capability to perform work similar to that required for this contract. Complete one Section F for each project. Present ten projects, unless otherwise specified by the agency. Complete the following blocks for each project:

20. Example Project Key Number. Start with "1" for the first project and number consecutively.

21. Title and Location. Title and location of project or contract. For an indefinite delivery contract, the location is the geographic scope of the contract.

22. Year Completed. Enter the year completed of the professional services (such as planning, engineering study, design, or surveying), and/or the year completed of construction, if applicable. If any of the professional services or the construction projects are not complete, leave Year Completed blank and indicate the status in Brief Description of Project and Relevance to This Contract (block 24).

23a. Project Owner. Project owner or user, such as a government agency or installation, an institution, a corporation or private individual.

23b. Point of Contact Name. Provide name of a person associated with the project owner or the organization which contracted for the professional services, who is very familiar with the project and the firm's (or firms') performance.

23c. Point of Contact Telephone Number Self-explanatory.

24. Brief Description of Project and Relevance to This Contract. Indicate scope, size, cost, principal elements and special features of the project. Discuss the relevance of the example project to this contract. Enter any other information requested by the agency for each example project.

25. Firms from Section C Involved with This Project. Indicate which firms (or branch offices, if appropriate) on the project team were involved in the example project, and their roles. List in the same order as Section C.

Section G. Key Personnel Participation in Example Projects.

This matrix is intended to graphically depict which key personnel identified in Section E worked on the example projects listed in Section F. Complete the following blocks (see example below).

26. and 27. Names of Key Personnel and Role in This Contract. List the names of the key personnel and their proposed roles in this contract in the same order as they appear in Section E.

28. Example Projects Listed in Section F. In the column under each project key number (see block 29) and for each key person, place an "X" under the project key number for participation in the same or similar role.

29. Example Projects Key. List the key numbers and titles of the example projects in the same order as they appear in Section F.

Section H. Additional Information.

30. Use this section to provide additional information specifically requested by the agency or to address selection criteria that are not covered by the information provided in Sections A-G.

Section I. Authorized Representative.

31. and 32. Signature of Authorized Representative and Date. An authorized representative of a joint venture or the prime contractor must sign and date the completed form. Signing attests that the information provided is current and factual, and that all firms on the proposed team agree to work on the project. Joint ventures selected for negotiations must make available a statement of participation by a principal of each member of the joint venture.

33. Name and Title. Self-explanatory.

SAMPLE ENTRIES FOR SECTION G (MATRIX)

26. NAMES OF KEY PERSONNEL (From Section E, Block 12)	27. ROLE IN THIS CONTRACT (From Section E, Block 13)	28. EXAMPLE PROJECTS LISTED IN SECTION F (Fill in "Example Projects Key" section below first, before completing table. Place "X" under project key number for participation in same or similar role.)									
		1	2	3	4	5	6	7	8	9	10
Jane A. Smith	Chief Architect	X		X							
Joseph B. Williams	Chief Mech. Engineer	X	X	X	X						
Tara C. Donovan	Chief Elec. Engineer	X	X		X						

29. EXAMPLE PROJECTS KEY

NO.	TITLE OF EXAMPLE PROJECT (FROM SECTION F)	NO.	TITLE OF EXAMPLE PROJECT (FROM SECTION F)
1	Federal Courthouse, Denver, CO	6	XYZ Corporation Headquarters, Boston, MA
2	Justin J. Wilson Federal Building, Baton Rouge, LA	7	Founder's Museum, Newport RI

Part II - General Qualifications

See the " **General Instructions** " on page 1 for firms with branch offices. Prepare Part II for the specific branch office seeking work if the firm has branch offices.

1. Solicitation Number. If Part II is submitted for a specific contract, insert the agency's solicitation number and/or project number, if applicable, exactly as shown in the public announcement or agency request.

2a-2e. Firm (or Branch Office) Name and Address. Self-explanatory.

3. Year Established. Enter the year the firm (or branch office, if appropriate) was established under the current name.

4. DUNS Number. Insert the Data Universal Numbering System number issued by Dun and Bradstreet Information Services. Firms must have a DUNS number. See FAR Part 4.6.

5. Ownership.

a. Type. Enter the type of ownership or legal structure of the firm (sole proprietor, partnership, corporation, joint venture, etc.).

b. Small Business Status. Refer to the North American Industry Classification System (NAICS) code in the public announcement, and indicate if the firm is a small business according to the current size standard for that NAICS code (for example, Engineering Services (part of NAICS 541330), Architectural Services (NAICS 541310), Surveying and Mapping Services (NAICS 541370)). The small business categories and the internet website for the NAICS codes appear in FAR Part 19. Contact the requesting agency for any questions. Contact your local U.S. Small Business Administration office for any questions regarding Business Status.

6a-6c. Point of Contact. Provide this information for a representative of the firm that the agency can contact for additional information. The representative must be empowered to speak on contractual and policy matters.

7. Name of Firm. Enter the name of the firm if Part II is prepared for a branch office.

8a-8c. Former Firm Names. Indicate any other previous names for the firm (or branch office) during the last six years. Insert the year that this corporate name change was effective and the associated DUNS Number. This information is used to review past performance on Federal contracts.

9. Employees by Discipline. Use the relevant disciplines and associated function codes shown at the end of these instructions and list in the same numerical order. After the listed disciplines, write in any additional disciplines and leave the function code blank. List no more than 20 disciplines. Group remaining employees under "Other Employees" in column b. Each person can be counted only once according to his/her primary function. If Part II is prepared for a firm (including all branch offices), enter the number of employees by disciplines in column c(1). If Part II is prepared for a branch office, enter the number of employees by discipline in column c(2) and for the firm in column c(1).

10. Profile of Firm's Experience and Annual Average Revenue for Last 5 Years. Complete this block for the firm or branch office for which this Part II is prepared. Enter the experience categories which most accurately reflect the firm's technical capabilities and project experience. Use the relevant experience categories and associated profile codes shown at the end of these instructions, and list in the same numerical order. After the listed experience categories, write in any unlisted relevant project experience categories and leave the profile codes blank. For each type of experience, enter the appropriate revenue index number to reflect the professional services revenues received annually (averaged over the last 5 years) by the firm or branch office for performing that type of work. A particular project may be identified with one experience category or it may be broken into components, as best reflects the capabilities and types of work performed by the firm. However, do not double count the revenues received on a particular project.

11. Annual Average Professional Services Revenues of Firm for Last 3 Years. Complete this block for the firm or branch office for which this Part II is prepared. Enter the appropriate revenue index numbers to reflect the professional services revenues received annually (averaged over the last 3 years) by the firm or branch office. Indicate Federal work (performed directly for the Federal Government, either as the prime contractor or subcontractor), non-Federal work (all other domestic and foreign work, including Federally-assisted projects), and the total. If the firm has been in existence for less than 3 years, see the definition for "Annual Receipts" under FAR 19.101.

12. Authorized Representative. An authorized representative of the firm or branch office must sign and date the completed form. Signing attests that the information provided is current and factual. Provide the name and title of the authorized representative who signed the form.

List of Disciplines (Function Codes)

Code	Description	Code	Description
01	Acoustical Engineer	32	Hydraulic Engineer
02	Administrative	33	Hydrographic Surveyor
03	Aerial Photographer	34	Hydrologist
04	Aeronautical Engineer	35	Industrial Engineer
05	Archeologist	36	Industrial Hygienist
06	Architect	37	Interior Designer
07	Biologist	38	Land Surveyor
08	CADD Technician	39	Landscape Architect
09	Cartographer	40	Materials Engineer
10	Chemical Engineer	41	Materials Handling Engineer
11	Chemist	42	Mechanical Engineer
12	Civil Engineer	43	Mining Engineer
13	Communications Engineer	44	Oceanographer
14	Computer Programmer	45	Photo Interpreter
15	Construction Inspector	46	Photogrammetrist
16	Construction Manager	47	Planner: Urban/Regional
17	Corrosion Engineer	48	Project Manager
18	Cost Engineer/Estimator	49	Remote Sensing Specialist
19	Ecologist	50	Risk Assessor
20	Economist	51	Safety/Occupational Health Engineer
21	Electrical Engineer	52	Sanitary Engineer
22	Electronics Engineer	53	Scheduler
23	Environmental Engineer	54	Security Specialist
24	Environmental Scientist	55	Soils Engineer
25	Fire Protection Engineer	56	Specifications Writer
26	Forensic Engineer	57	Structural Engineer
27	Foundation/Geotechnical Engineer	58	Technician/Analyst
28	Geodetic Surveyor	59	Toxicologist
29	Geographic Information System Specialist	60	Transportation Engineer
30	Geologist	61	Value Engineer
31	Health Facility Planner	62	Water Resources Engineer

List of Experience Categories (Profile Codes)

Code	Description
A01	Acoustics, Noise Abatement
A02	Aerial Photography; Airborne Data and Imagery Collection and Analysis
A03	Agricultural Development; Grain Storage; Farm Mechanization
A04	Air Pollution Control
A05	Airports; Navaids; Airport Lighting; Aircraft Fueling
A06	Airports; Terminals and Hangars; Freight Handling
A07	Arctic Facilities
A08	Animal Facilities
A09	Anti-Terrorism/Force Protection
A10	Asbestos Abatement
A11	Auditoriums & Theaters
A12	Automation; Controls; Instrumentation
B01	Barracks; Dormitories
B02	Bridges
C01	Cartography
C02	Cemeteries *(Planning & Relocation)*
C03	Charting: Nautical and Aeronautical
C04	Chemical Processing & Storage
C05	Child Care/Development Facilities
C06	Churches; Chapels
C07	Coastal Engineering
C08	Codes; Standards; Ordinances
C09	Cold Storage; Refrigeration and Fast Freeze
C10	Commercial Building *(low rise)* ; Shopping Centers
C11	Community Facilities
C12	Communications Systems; TV; Microwave
C13	Computer Facilities; Computer Service
C14	Conservation and Resource Management
C15	Construction Management
C16	Construction Surveying
C17	Corrosion Control; Cathodic Protection; Electrolysis
C18	Cost Estimating; Cost Engineering and Analysis; Parametric Costing; Forecasting
C19	Cryogenic Facilities
D01	Dams *(Concrete; Arch)*
D02	Dams *(Earth; Rock);* Dikes; Levees
D03	Desalinization *(Process & Facilities)*
D04	Design-Build - Preparation of Requests for Proposals
D05	Digital Elevation and Terrain Model Development
D06	Digital Orthophotography
D07	Dining Halls; Clubs; Restaurants
D08	Dredging Studies and Design
E01	Ecological & Archeological Investigations
E02	Educational Facilities; Classrooms
E03	Electrical Studies and Design
E04	Electronics
E05	Elevators; Escalators; People-Movers
E06	Embassies and Chanceries
E07	Energy Conservation; New Energy Sources
E08	Engineering Economics
E09	Environmental Impact Studies, Assessments or Statements
E10	Environmental and Natural Resource Mapping
E11	Environmental Planning
E12	Environmental Remediation
E13	Environmental Testing and Analysis
F01	Fallout Shelters; Blast-Resistant Design
F02	Field Houses; Gyms; Stadiums
F03	Fire Protection
F04	Fisheries; Fish ladders
F05	Forensic Engineering
F06	Forestry & Forest products
G01	Garages; Vehicle Maintenance Facilities; Parking Decks
G02	Gas Systems (Propane; Natural, Etc.)
G03	Geodetic Surveying: Ground and Air-borne
G04	Geographic Information System Services: Development, Analysis, and Data Collection
G05	Geospatial Data Conversion: Scanning, Digitizing, Compilation, Attributing, Scribing, Drafting
G06	Graphic Design
H01	Harbors; Jetties; Piers, Ship Terminal Facilities
H02	Hazardous Materials Handling and Storage
H03	Hazardous, Toxic, Radioactive Waste Remediation
H04	Heating; Ventilating; Air Conditioning
H05	Health Systems Planning
H06	Highrise; Air-Rights-Type Buildings
H07	Highways; Streets; Airfield Paving; Parking Lots
H08	Historical Preservation
H09	Hospital & Medical Facilities
H10	Hotels; Motels
H11	Housing *(Residential, Multi-Family; Apartments; Condominiums)*
H12	Hydraulics & Pneumatics
H13	Hydrographic Surveying

List of Experience Categories (Profile Codes)

Code	Description
I01	Industrial Buildings; Manufacturing Plants
I02	Industrial Processes; Quality Control
I03	Industrial Waste Treatment
I04	Intelligent Transportation Systems
I05	Interior Design; Space Planning
I06	Irrigation; Drainage
J01	Judicial and Courtroom Facilities
L01	Laboratories; Medical Research Facilities
L02	Land Surveying
L03	Landscape Architecture
L04	Libraries; Museums; Galleries
L05	Lighting (Interior; Display; Theater, Etc.)
L06	Lighting (Exteriors; Streets; Memorials; Athletic Fields, Etc.)
M01	Mapping Location/Addressing Systems
M02	Materials Handling Systems; Conveyors; Sorters
M03	Metallurgy
M04	Microclimatology; Tropical Engineering
M05	Military Design Standards
M06	Mining & Mineralogy
M07	Missile Facilities (Silos; Fuels; Transport)
M08	Modular Systems Design; Pre-Fabricated Structures or Components
N01	Naval Architecture; Off-Shore Platforms
N02	Navigation Structures; Locks
N03	Nuclear Facilities; Nuclear Shielding
O01	Office Buildings; Industrial Parks
O02	Oceanographic Engineering
O03	Ordnance; Munitions; Special Weapons
P01	Petroleum Exploration; Refining
P02	Petroleum and Fuel (Storage and Distribution)
P03	Photogrammetry
P04	Pipelines (Cross-Country - Liquid & Gas)
P05	Planning (Community, Regional, Areawide and State)
P06	Planning (Site, Installation, and Project)
P07	Plumbing & Piping Design
P08	Prisons & Correctional Facilities
P09	Product, Machine Equipment Design
P10	Pneumatic Structures, Air-Support Buildings
P11	Postal Facilities
P12	Power Generation, Transmission, Distribution
P13	Public Safety Facilities
R01	Radar; Sonar; Radio & Radar Telescopes
R02	Radio Frequency Systems & Shieldings
R03	Railroad; Rapid Transit
R04	Recreation Facilities (Parks, Marinas, Etc.)
R05	Refrigeration Plants/Systems
R06	Rehabilitation (Buildings; Structures; Facilities)
R07	Remote Sensing
R08	Research Facilities
R09	Resources Recovery; Recycling
R10	Risk Analysis
R11	Rivers; Canals; Waterways; Flood Control
R12	Roofing
S01	Safety Engineering; Accident Studies; OSHA Studies
S02	Security Systems; Intruder & Smoke Detection
S03	Seismic Designs & Studies
S04	Sewage Collection, Treatment and Disposal
S05	Soils & Geologic Studies; Foundations
S06	Solar Energy Utilization
S07	Solid Wastes; Incineration; Landfill
S08	Special Environments; Clean Rooms, Etc.
S09	Structural Design; Special Structures
S10	Surveying; Platting; Mapping; Flood Plain Studies
S11	Sustainable Design
S12	Swimming Pools
S13	Storm Water Handling & Facilities
T01	Telephone Systems *(Rural; Mobile; Intercom, Etc.)*
T02	Testing & Inspection Services
T03	Traffic & Transportation Engineering
T04	Topographic Surveying and Mapping
T05	Towers *(Self-Supporting & Guyed Systems)*
T06	Tunnels & Subways

List of Experience Categories (Profile Codes)

Code	Description
U01	Unexploded Ordnance Remediation
U02	Urban Renewals; Community Development
U03	Utilities (Gas and Steam)
V01	Value Analysis; Life-Cycle Costing
W01	Warehouses & Depots
W02	Water Resources; Hydrology; Ground Water
W03	Water Supply; Treatment and Distribution
W04	Wind Tunnels; Research/Testing Facilities Design
Z01	Zoning; Land Use Studies

ARCHITECT - ENGINEER QUALIFICATIONS

PART I - CONTRACT-SPECIFIC QUALIFICATIONS

A. CONTRACT INFORMATION

1. TITLE AND LOCATION *(City and State)*

2. PUBLIC NOTICE DATE	3. SOLICITATION OR PROJECT NUMBER

B. ARCHITECT-ENGINEER POINT OF CONTACT

4. NAME AND TITLE

5. NAME OF FIRM

6. TELEPHONE NUMBER	7. FAX NUMBER	8. E-MAIL ADDRESS

C. PROPOSED TEAM

(Complete this section for the prime contractor and all key subcontractors.)

	(Check) PRIME	J-V PARTNER	SUBCON-TRACTOR	9. FIRM NAME	10. ADDRESS	11. ROLE IN THIS CONTRACT
a.				☐ CHECK IF BRANCH OFFICE		
b.				☐ CHECK IF BRANCH OFFICE		
c.				☐ CHECK IF BRANCH OFFICE		
d.				☐ CHECK IF BRANCH OFFICE		
e.				☐ CHECK IF BRANCH OFFICE		
f.				☐ CHECK IF BRANCH OFFICE		

D. ORGANIZATIONAL CHART OF PROPOSED TEAM ☐ *(Attached)*

E. RESUMES OF KEY PERSONNEL PROPOSED FOR THIS CONTRACT

(Complete one Section E for each key person.)

12. NAME	13. ROLE IN THIS CONTRACT	14. YEARS EXPERIENCE	
		a. TOTAL	b. WITH CURRENT FIRM

15. FIRM NAME AND LOCATION *(City and State)*

16. EDUCATION *(DEGREE AND SPECIALIZATION)*	17. CURRENT PROFESSIONAL REGISTRATION *(STATE AND DISCIPLINE)*

18. OTHER PROFESSIONAL QUALIFICATIONS *(Publications, Organizations, Training, Awards, etc.)*

19. RELEVANT PROJECTS

	(1) TITLE AND LOCATION *(City and State)*	(2) YEAR COMPLETED	
		PROFESSIONAL SERVICES	CONSTRUCTION *(If applicable)*
a.	(3) BRIEF DESCRIPTION *(Brief scope, size, cost, etc.)* AND SPECIFIC ROLE	☐ Check if project performed with current firm	
	(1) TITLE AND LOCATION *(City and State)*	(2) YEAR COMPLETED	
		PROFESSIONAL SERVICES	CONSTRUCTION *(If applicable)*
b.	(3) BRIEF DESCRIPTION *(Brief scope, size, cost, etc.)* AND SPECIFIC ROLE	☐ Check if project performed with current firm	
	(1) TITLE AND LOCATION *(City and State)*	(2) YEAR COMPLETED	
		PROFESSIONAL SERVICES	CONSTRUCTION *(If applicable)*
c.	(3) BRIEF DESCRIPTION *(Brief scope, size, cost, etc.)* AND SPECIFIC ROLE	☐ Check if project performed with current firm	
	(1) TITLE AND LOCATION *(City and State)*	(2) YEAR COMPLETED	
		PROFESSIONAL SERVICES	CONSTRUCTION *(If applicable)*
d.	(3) BRIEF DESCRIPTION *(Brief scope, size, cost, etc.)* AND SPECIFIC ROLE	☐ Check if project performed with current firm	
	(1) TITLE AND LOCATION *(City and State)*	(2) YEAR COMPLETED	
		PROFESSIONAL SERVICES	CONSTRUCTION *(If applicable)*
e.	(3) BRIEF DESCRIPTION *(Brief scope, size, cost, etc.)* AND SPECIFIC ROLE	☐ Check if project performed with current firm	

F. EXAMPLE PROJECTS WHICH BEST ILLUSTRATE PROPOSED TEAM'S QUALIFICATIONS FOR THIS CONTRACT *(Present as many projects as requested by the agency, or 10 projects, if not specified. Complete one Section F for each project.)*			20. EXAMPLE PROJECT KEY NUMBER
21. TITLE AND LOCATION *(City and State)*	22. YEAR COMPLETED		
	PROFESSIONAL SERVICES	CONSTRUCTION *(If applicable)*	

23. PROJECT OWNER'S INFORMATION

a. PROJECT OWNER	b. POINT OF CONTACT NAME	c. POINT OF CONTACT TELEPHONE NUMBER

24. BRIEF DESCRIPTION OF PROJECT AND RELEVANCE TO THIS CONTRACT *(Include scope, size, and cost)*

25. FIRMS FROM SECTION C INVOLVED WITH THIS PROJECT

	(1) FIRM NAME	(2) FIRM LOCATION *(City and State)*	(3) ROLE
a.			
b.			
c.			
d.			
e.			
f.			

G. KEY PERSONNEL PARTICIPATION IN EXAMPLE PROJECTS

26. NAMES OF KEY PERSONNEL (From Section E, Block 12)	27. ROLE IN THIS CONTRACT (From Section E, Block 13)	28. EXAMPLE PROJECTS LISTED IN SECTION F (Fill in "Example Projects Key" section below before completing table. Place "X" under project key number for participation in same or similar role.)									
		1	2	3	4	5	6	7	8	9	10

29. EXAMPLE PROJECTS KEY

NO.	TITLE OF EXAMPLE PROJECT (FROM SECTION F)	NO.	TITLE OF EXAMPLE PROJECT (FROM SECTION F)
1		6	
2		7	
3		8	
4		9	
5		10	

H. ADDITIONAL INFORMATION

30. PROVIDE ANY ADDITIONAL INFORMATION REQUESTED BY THE AGENCY. ATTACH ADDITIONAL SHEETS AS NEEDED.

I. AUTHORIZED REPRESENTATIVE

The foregoing is a statement of facts.

31. SIGNATURE	32. DATE

33. NAME AND TITLE

ARCHITECT-ENGINEER QUALIFICATIONS

1. SOLICITATION NUMBER *(If any)*

PART II - GENERAL QUALIFICATIONS

(If a firm has branch offices, complete for each specific branch office seeking work.)

2a. FIRM (OR BRANCH OFFICE) NAME

3. YEAR ESTABLISHED

4. DUNS NUMBER

2b. STREET

5. OWNERSHIP

a. TYPE

2c. CITY

2d. STATE

2e. ZIP CODE

b. SMALL BUSINESS STATUS

6a. POINT OF CONTACT NAME AND TITLE

7. NAME OF FIRM *(If block 2a is a branch office)*

6b. TELEPHONE NUMBER

6c. E-MAIL ADDRESS

8a. FORMER FIRM NAME(S) *(If any)*

8b. YR. ESTABLISHED

8c. DUNS NUMBER

9. EMPLOYEES BY DISCIPLINE

a. Function Code	b. Discipline	c. No. of Employees (1) FIRM	c. No. of Employees (2) BRANCH
	Other Employees		
	Total		

10. PROFILE OF FIRM'S EXPERIENCE AND ANNUAL AVERAGE REVENUE FOR LAST 5 YEARS

a. Profile Code	b. Experience	c. Revenue Index Number *(see below)*

11. ANNUAL AVERAGE PROFESSIONAL SERVICES REVENUES OF FIRM FOR LAST 3 YEARS

(Insert revenue index number shown at right)

a. Federal Work	
b. Non-Federal Work	
c. Total Work	

PROFESSIONAL SERVICES REVENUE INDEX NUMBER

1. Less than $100,000
2. $100,00 to less than $250,000
3. $250,000 to less than $500,000
4. $500,000 to less than $1 million
5. $1 million to less than $2 million
6. $2 million to less than $5 million
7. $5 million to less than $10 million
8. $10 million to less than $25 million
9. $25 million to less than $50 million
10. $50 million or greater

12. AUTHORIZED REPRESENTATIVE

The foregoing is a statement of facts.

a. SIGNATURE

b. DATE

c. NAME AND TITLE

AUTHORIZED FOR LOCAL REPRODUCTION

STANDARD FORM 330 (REV. 2/2012)

PAGE 6

385. Revise section 53.301–1093 to read as follows:

53.301–1093 Schedule Of Withholdings Under The Construction Wage Rate Requirements Statute (40 U.S.C. Chapter 31, Subchapter IV, § 3144) and/or The Contract Work Hours And Safety Standards Statute (40 U.S.C. Chapter 37, § 3703).

SCHEDULE OF WITHHOLDINGS UNDER THE CONSTRUCTION WAGE RATE REQUIREMENTS STATUTE (40 U.S.C. CHAPTER 31, SUBCHAPTER IV, §3144)

AND/OR

THE CONTRACT WORK HOURS AND SAFETY STANDARDS STATUTE (40 U.S.C. CHAPTER 37, §3703)

U.S. GOVERNMENT ACCOUNTABILITY OFFICE
Office of General Counsel
Davis-Bacon Group
WASHINGTON, DC 20548

Contractor or subcontractor charged with violations _____

Prime contractor _____

Contract No. _____ , _____
(Date)

Report concerning irregularities transmitted to--

_____ , _____
(Date)

Deducted from amounts otherwise due the contractor, for deposit to the account "05X6022," covering wages due the employees whose names, social security numbers, and current addresses are listed on the attached schedule, are withholdings pursuant to the following laws:

Construction Wage Rate Requirements Statute _____ $ _____

Contract Work Hours and Safety Standards _____ $ _____

Total _____ $ _____

Forwarded herewith is check No. _____ , dated _____

for $ _____

_____
(Disbursing officer or other administrative official)

STANDARD FORM 1093
(REV. 5/2012)

386. Revise section 53.301–1413 to read as follows:

53.301–1413 Statement and Acknowledgement.

STATEMENT AND ACKNOWLEDGMENT

OMB Number: 9000-0014
Expiration Date: 6/30/2014

Public reporting burden for this collection of information is estimated to average 30 minutes per response, including the time for reviewing instructions, searching existing data sources, gathering and maintaining the data needed, and completing and reviewing the collection of information. Send comments regarding this burden estimate or any other aspect of this collection of information, including suggestions for reducing this burden, to the Regulatory Secretariat Division (MVCB), GSA, Washington, DC 20417.

PART I - STATEMENT OF PRIME CONTRACTOR

1. PRIME CONTRACT NO.	2. DATE SUBCONTRACT AWARDED	3. SUBCONTRACT NUMBER

4. PRIME CONTRACTOR			5. SUBCONTRACTOR		
a. NAME			a. NAME		
b. STREET ADDRESS			b. STREET ADDRESS		
c. CITY	d. STATE	e. ZIP CODE	c. CITY	d. STATE	e. ZIP CODE

6. The prime contract ☐ does, ☐ does not contain the clause entitled "Contract Work Hours and Safety Standards -- Overtime Compensation."

7. The prime contractor states that under the contract shown in Item 1, a subcontract was awarded on the date shown in Item 2 to the subcontractor identified in item 5 by the following firm:

a. NAME OF AWARDING FIRM

b. DESCRIPTION OF WORK BY SUBCONTRACTOR

8. PROJECT	9. LOCATION

10a. NAME OF PERSON SIGNING	11. BY *(Signature)*	12. DATE SIGNED
10b. TITLE OF PERSON SIGNING		

PART II - ACKNOWLEDGMENT OF SUBCONTRACTOR

13. The subcontractor acknowledges that the following clauses of the contract shown in Item 1 are included in this subcontract:

- Contract Work Hours and Safety Standards Act - Overtime Compensation - (If included in prime contract see Block 6)
- Payrolls and Basic Records
- Withholding of Funds
- Disputes Concerning Labor Standards
- Compliance with Construction Wage Rate Requirements and Related Regulations
- Construction Wage Rate Requirements
- Apprentices and Trainees
- Compliance with Copeland Act Requirements
- Subcontracts (Labor Standards)
- Contract Termination - Debarment
- Certification of Eligibility

14. NAME(S) OF ANY INTERMEDIATE SUBCONTRACTORS, IF ANY

A		C	
B		D	

15a. NAME OF PERSON SIGNING	16. BY *(Signature)*	17. DATE SIGNED
15b. TITLE OF PERSON SIGNING		

AUTHORIZED FOR LOCAL REPRODUCTION
PREVIOUS EDITION IS NOT USABLE

STANDARD FORM 1413 (REV. 2/2012)
Prescribed by GSA/FAR (48 CFR) 53.222(e)

387. Revise section 53.301–1444 to read as follows:

53.301–1444 Request For Authorization Of Additional Classification and Rate.

AUTHORIZED FOR LOCAL REPRODUCTION

REQUEST FOR AUTHORIZATION OF ADDITIONAL CLASSIFICATION AND RATE	CHECK APPROPRIATE BOX ☐ SERVICE CONTRACT ☐ CONSTRUCTION CONTRACT	**OMB Number: 9000-0089** **Expiration Date: 7/31/2014**

Public reporting burden for this collection of information is estimated to average 15 minutes per response, including the time for reviewing instructions, searching existing data sources, gathering and maintaining the data needed, and completing and reviewing the collection of information. Send comments regarding this burden estimate or any other aspect of this collection of information, including suggestions for reducing this burden, to the Regulatory Secretariat Division (MVCB), GSA, Washington, DC 20417.

INSTRUCTIONS: THE CONTRACTOR SHALL COMPLETE ITEMS 3 THROUGH 16, KEEP A PENDING COPY, AND SUBMIT THE REQUEST, IN QUADRUPLICATE, TO THE CONTRACTING OFFICER.

1. **TO:** ADMINISTRATOR, WAGE AND HOUR DIVISION U.S. DEPARTMENT OF LABOR WASHINGTON, D.C. 20210	2. **FROM:** *(REPORTING OFFICE)*

3. CONTRACTOR	4. DATE OF REQUEST

5. CONTRACT NUMBER	6. DATE BID OPENED *(SEALED BIDDING)*	7. DATE OF AWARD	8. DATE CONTRACT WORK STARTED	9. DATE OPTION EXERCISED (If *APPLICABLE) (SERVICE CONTRACT ONLY)*

10. SUBCONTRACTOR *(IF ANY)*

11. PROJECT AND DESCRIPTION OF WORK *(ATTACH ADDITIONAL SHEET IF NEEDED)*

12. LOCATION *(CITY, COUNTY AND STATE)*

13. IN ORDER TO COMPLETE THE WORK PROVIDED FOR UNDER THE ABOVE CONTRACT, IT IS NECESSARY TO ESTABLISH THE FOLLOWING RATE(S) FOR THE INDICATED CLASSIFICATION(S) NOT INCLUDED IN THE DEPARTMENT OF LABOR DETERMINATION

NUMBER: _____ DATED: _____

a. LIST IN ORDER: PROPOSED CLASSIFICATION TITLE(S); JOB DESCRIPTION(S); DUTIES; AND RATIONALE FOR PROPOSED CLASSIFICATIONS (SCA ONLY) *(Use reverse or attach additional sheets, if necessary)*	b. WAGE RATE(S)	c. FRINGE BENEFITS PAYMENTS

14. SIGNATURE AND TITLE OF SUBCONTRACTOR REPRESENTATIVE *(IF ANY)*	15. SIGNATURE AND TITLE OF PRIME CONTRACTOR REPRESENTATIVE	
16. SIGNATURE OF EMPLOYEE OR REPRESENTATIVE	TITLE	CHECK APPROPRIATE BOX-REFERENCING BLOCK 13. ☐ **AGREE** ☐ **DISAGREE**

TO BE COMPLETED BY CONTRACTING OFFICER *(CHECK AS APPROPRIATE - SEE FAR 22.1019 (SERVICE CONTRACT LABOR STANDARDS) OR FAR 22.406-3 (CONSTRUCTION WAGE RATE REQUIREMENTS))*

☐ THE INTERESTED PARTIES AGREE AND THE CONTRACTING OFFICER RECOMMENDS APPROVAL BY THE WAGE AND HOUR DIVISION. AVAILABLE INFORMATION AND RECOMMENDATIONS ARE ATTACHED.

☐ THE INTERESTED PARTIES CANNOT AGREE ON THE PROPOSED CLASSIFICATION AND WAGE RATE. A DETERMINATION OF THE QUESTION BY THE WAGE AND HOUR DIVISION IS THEREFORE REQUESTED. AVAILABLE INFORMATION AND RECOMMENDATIONS ARE ATTACHED.

(Send 3 copies to the Department of Labor)

SIGNATURE OF CONTRACTING OFFICER OR REPRESENTATIVE	TITLE AND COMMERCIAL TELEPHONE NUMBER	DATE SUBMITTED

PREVIOUS EDITION IS USABLE

STANDARD FORM 1444 (REV. 2/2012)
Prescribed by GSA-FAR (48 CFR) 53.222(f)

388. Revise section 53.301–1446 to read as follows:

53.301–1446 Labor Standards Investigation Summary Sheet.

LABOR STANDARDS INVESTIGATION SUMMARY SHEET

REPORTING OFFICE	CONTRACT NUMBER	CONTRACT AMOUNT	DATE OF CONTRACT

TYPE OF CONTRACT

☐FIXED PRICE ☐CPFF ☐OTHER *(Specify)*

CONTRACTOR'S NAME AND ADDRESS *(Include ZIP Code)*	EMPLOYER'S NAME AND ADDRESS *(Include ZIP Code)* *(If other than prime contractor)*

PROJECT AND LOCATION

DESCRIPTION OF WORK

BASIS FOR INVESTIGATION

WAGE DETERMINATION NUMBER	WAGE DETERMINATION DATE

NATURE AND EXTENT OF VIOLATION

NUMBER OF EMPLOYEES INVOLVED	ARE VIOLATIONS CONSIDERED WILLFUL? ☐YES ☐NO	COPELAND ACT VIOLATIONS? ☐YES ☐NO
DAVIS-BACON ACT UNDERPAYMENTS $	CONTRACT WORK HOURS AND SAFETY STANDARDS ACT UNDERPAYMENTS $	CONTRACT WORK HOURS AND SAFETY STANDARDS ACT VIOLATIONS $

CORRECTIVE ACTIONS TAKEN

RESTITUTION MADE ☐YES ☐NO	AMOUNT OF RESTITUTION $	CONTRACTORS PAYMENT WITHHELD ☐YES ☐NO
WITHHELD FOR DAVIS-BACON VIOLATIONS $	WITHHELD FOR CONTRACT WORK HOURS AND SAFETY STANDARDS ACT UNDERPAYMENTS $	WITHHELD FOR CONTRACT WORK HOURS AND SAFETY STANDARDS ACT VIOLATIONS $

GENERAL SERVICES ADMINISTRATION

STANDARD FORM 1446 (REV. 4/2012)
Prescribed by GSA-FAR (48 CFR) 53.222(h)

REMARKS

PREPARED BY		
DATE	TITLE	SIGNATURE

STANDARD FORM 1446 (REV. 4/2012) **PAGE 2**

[FR Doc. C1–2012–21874 Filed 10–2–12; 8:45 am]

BILLING CODE 6820–14–C

Notices

Federal Register

Vol. 77, No. 192

Wednesday, October 3, 2012

This section of the FEDERAL REGISTER contains documents other than rules or proposed rules that are applicable to the public. Notices of hearings and investigations, committee meetings, agency decisions and rulings, delegations of authority, filing of petitions and applications and agency statements of organization and functions are examples of documents appearing in this section.

AFRICAN DEVELOPMENT FOUNDATION

Board of Directors Executive Session Meeting

Meeting: African Development Foundation, Board of Directors Executive Session Meeting.

Time: Thursday, October 11, 2012, 5 p.m. to 6:30 p.m.

Place: Teleconference.

Date: Thursday, October 11, 2012.

Status:

1. Closed session, Thursday, October 11, 2012, *5 p.m. to 6:30 p.m.*

Lloyd O. Pierson,

President & CEO, United States African Development Foundation.

[FR Doc. 2012–24335 Filed 10–2–12; 8:45 am]

BILLING CODE P

DEPARTMENT OF AGRICULTURE

Agricultural Marketing Service

[Doc. #AMS–CN–12–0048]

Advisory Committee on Universal Cotton Standards

AGENCY: Agricultural Marketing Service, USDA.

ACTION: Notice of Re-establishment of the U.S. Department of Agriculture (USDA) Advisory Committee on Universal Cotton Standards and a Request for Nominations.

SUMMARY: The U.S. Department of Agriculture (USDA) intends to re-establish the Advisory Committee on Universal Cotton Standards (Committee). The Committee is necessary and in the public interest. The Committee reviews official Universal Standards for American Upland cotton prepared by USDA and would make recommendations to the Secretary of Agriculture regarding the establishment or revision of standards. USDA also seeks nominations of individuals to be considered for selection as Committee members.

DATES: Written nominations must be received on or before November 2, 2012.

ADDRESSES: Nominations and applications materials should be sent to Darryl Earnest, Deputy Administrator, Cotton & Tobacco Programs, AMS, USDA, 3275 Appling Road, Room 11, Memphis, TN 38133.

FOR FURTHER INFORMATION CONTACT: James Knowlton, Designated Federal Official; Phone: (901) 384–3030; Email: *James.Knowlton@ams.usda.gov.*

SUPPLEMENTARY INFORMATION: Pursuant to the Federal Advisory Committee Act (5 U.S.C. App.), notice is hereby given that the Secretary of Agriculture intends to re-establish the Committee for two years and the Committee would be composed of foreign and domestic representatives of the cotton industry. The purpose of the Committee would be to review official Universal Standards for U.S. Upland cotton prepared by USDA and make recommendations to the Secretary of Agriculture regarding establishment or revision of the standards established under the United States Cotton Standards Act (7 U.S.C. 51 *et seq.*). The Deputy Administrator of the Agricultural Marketing Service's Cotton and Tobacco Programs will serve as the Committee's Executive Secretary.

Industry members will be appointed by the Secretary of Agriculture and serve a two (2) year term. Membership will consist of representatives from the cotton industry. The U.S. cotton industry's membership would be comprised of twelve (12) producers and ginners, six (6) representatives of merchandising firms, and six (6) representatives of textile manufacturers. These representatives would be appointed by the Secretary of Agriculture. Each member would have one vote. Accordingly, voting privileges will be divided as follows: U.S. cotton producers and ginners—twelve (12) votes; U.S. merchandising firms—six (6) votes; U.S. textile manufacturers—six (6) votes. There would be two committee members designated from each of the foreign signatory associations. These committee members would be designated by the respective associations. Voting privileges would be divided as follows: foreign signatory merchant associations—six (6) votes; foreign signatory spinner associations—six (6) votes. The members of the re-established Committee will elect a Chairperson of the Committee.

The Secretary of Agriculture invites those individuals, organizations, and groups affiliated with the categories listed above to nominate individuals for membership on the re-established Committee. Nominations should describe and document the proposed member's qualifications for membership to the Committee and list their name, title, address, telephone, and fax number. The Secretary of Agriculture seeks a diverse group of members that represent a broad spectrum of persons interested in providing suggestions and ideas on how USDA can tailor its programs to meet the needs of the cotton industry.

All individuals who wish to nominate themselves can obtain the application form at *www.usda.gov/advisory_committees.xml.* Applicants should also include their resumes in their submission.

Equal opportunity practices in accordance with USDA policies will be followed in all appointments to the Committee. To ensure that recommendations of the Committee take into account the needs of the diverse groups served by USDA, membership will include to the extent possible, individuals with demonstrated ability to represent minorities, women and persons with disabilities.

Dated: September 28, 2012.

David R. Shipman,

Administrator, Agricultural Marketing Service.

[FR Doc. 2012–24352 Filed 10–2–12; 8:45 am]

BILLING CODE 3410–02–P

DEPARTMENT OF AGRICULTURE

Forest Service

Monroe Mountain Aspen Ecosystems Restoration Project Fishlake National Forest; Sevier and Piute Counties; UT

AGENCY: Forest Service, USDA.

ACTION: Notice; Intent to prepare environmental impact statement.

SUMMARY: The Forest Service will prepare an environmental impact statement (EIS) to document the analysis and disclose the environmental impacts of proposed land management

activities, and corresponding alternatives, within the Monroe Mountain Aspen Ecosystems Restoration Project area.

The purpose of the Monroe Mountain Aspen Ecosystems Restoration Project is to implement land management activities that are consistent with direction in the Fishlake National Forest Land and Resource Management Plan (Forest Plan) and respond to specific needs identified in the project area. The project-specific needs include addressing aspen decline to restore persistent aspen communities of various age classes and sizes with biodiverse understories.

The Monroe Mountain Aspen Ecosystems Restoration Project area is located on National Forest System lands, administered by the Richfield Ranger District, southeast of Richfield, Utah. The legal description for the project area is: multiple sections in Ranges 1, 2, 2½ and 3 West and in Townships 24, 25, 26, 27, 28 and 29 South.

DATES: Comments concerning the proposed land management activities should be received by November 19, 2012 to receive timely consideration in the preparation of the draft EIS.

ADDRESSES: Send written comments concerning the proposed land management activities or requests to be placed on the project mailing list to: Jason Kling, Attention: Monroe Mountain Aspen Restoration Project, Richfield Ranger District, 115 East 900 North, Richfield, Utah 84701. You are welcome and encouraged to submit electronic comments in acceptable formats [plain text (.txt), rich text (.rtf) or Word (.doc)] to: *comments-intermtn-fishlake-richfield@fs.fed.us*.

FOR FURTHER INFORMATION CONTACT: Jason Kling, Richfield District Ranger, 115 East 900 North, Richfield, Utah 84701, phone (435) 896–9233, fax (435) 896–9347, email: *jkling@fs.fed.u*s. In addition, an Open House will be held at the Sevier County Administrative Building in Richfield, Utah October 10, 6:30 p.m. to 8:30 p.m.

SUPPLEMENTARY INFORMATION: The information presented in this notice is included to help the reviewer determine if they are interested in or potentially affected by the proposed land management activities. The information presented in this notice is summarized. Those who wish to provide comments, or are otherwise interested in or affected by the project, are encouraged to obtain additional information from the contact identified in the **FOR FURTHER INFORMATION CONTACT** section. Additionally, project detailed information, including maps, may be found on the web at: *www. fs.usda.gov/goto/fishlake/projects*.

Proposed Actions—Aspen ecosystem restoration activities are proposed in order to restore and sustain aspen in the project area. The Richfield Ranger District has identified restoring all aspen ecosystems on Monroe Mountain as the primary purpose of this project. To accomplish this purpose, the District has identified a need to address lack of fire and subsequent conifer encroachment as one of the primary underlying causes for aspen decline on Monroe Mountain. To address lack of fire and subsequent conifer encroachment on Monroe Mountain, the Richfield District is considering a combination of mechanical and/or prescribed fire treatments that target approximately 55,106 acres of mixed conifer/aspen. Treatments would occur over the next 10 years.

Restoring all aspen ecosystems on Monroe Mountain would result in multiple benefits, which include but are not limited to, improving water yield; improving and increasing habitat for wildlife dependent upon aspen communities; dispersing the use of aspen stands by ungulates; improving native species diversity; reducing hazardous fuel accumulations; and reducing the risk for large scale, intense wildland fires, which in turn creates an environment with less risk to public and firefighter safety.

Responsible Official—The District Ranger of the Richfield District, Fishlake National Forest, Jason Kling, is the Responsible Official for making project-level decisions from the project.

Decision Space—Decision-making will be limited to specific activities relating to the proposed actions. The primary decision to be made will be whether or not to implement the proposed actions or another action alternative that responds to the project's purpose and needs.

Project History—Unsustainable aspen ecosystem conditions include, but are not limited to, conifer encroachment due to reduced fire, and lack of recruitment due to domestic and wild browsing by cattle, sheep, elk and deer. Overbrowsing and absence of fire have been identified as the primary underlying causes for aspen ecosystems on Monroe Mountain being at risk. Aspen of 5–15 feet height (''recruitment'') are uncommon on Monroe Mountain, despite continued sprouting of aspen (''regeneration''). Due to high cost and continual maintenance, fencing is not a long term sustainable response option for protecting aspen sprouts from overbrowsing, and does not address underlying causes of the lack of recruitment. Aspen is a keystone species and historically was a landscape dominant species on Monroe Mountain. Aspen ecosystems support the highest level of biodiversity for interior western forests. Productivity of aspen ecosystem understories (grass, forbs, and shrubs) is higher than all other forest types. Individual aspen trees arise almost exclusively from root suckers and are relatively short-lived (i.e., 100–200 years). Aspen is shade intolerant and sprouts heavily following disturbance; such as fire, which removes shading effects in areas where conifers have become dominant and compete with aspen. Mechanical treatments can also be an effective disturbance tool for aspen restoration.

Preliminary Issues—Comments from American Indian tribes, the public, and other agencies will be considered in identifying preliminary issues. The District has identified and is concerned about the following potential issues: prescribed fire near private inholdings, mechanical treatments in Inventoried Roadless Areas, effects on wildlife species, effects to watersheds and soils, effects on vegetation (i.e. impacts to old growth conifer stands, spruce plantations and aspen), effects from insects and disease, effects on livestock grazing management, overbrowsing of new aspen by domestic livestock and wild ungulates following treatments, effects on cultural resources, and effects from smoke from prescribed fire.

Public Participation—This notice of intent initiates the scoping process, which will assist with the development of the environmental impact statement. The Forest Service is seeking comments from Federal, State, and local agencies, as well as local Native American tribes and other individuals or organizations that may be interested in or affected by the proposed actions. Comments received in response to this notice will become a matter of public record. While public participation is welcome at any time, comments on the proposed actions received within 45 days of this notice will be especially useful in the preparation of the draft EIS. Timely comments will be used to identify: potential issues with the proposed actions, alternatives to the proposed actions that respond to the identified needs and significant issues, and potential environmental effects of the proposed actions and alternatives considered in detail. In addition, the public is encouraged to contact and/or visit Forest Service officials at any time during the planning process.

The decisions associated with the analysis of this project will be

consistent with the Fishlake Land and Resource Management Plan.

Estimated Dates for Filing—The draft EIS is expected to be filed with the Environmental Protection Agency and available for public review in May 2013. A 45-day comment period will follow publication of a Notice of Availability of the draft EIS in the **Federal Register**. Comments received on the draft EIS will be used in preparation of the final EIS, expected in August 2013. A Record of Decision (ROD) will also be issued at that time along with the publication of a Notice of Availability of the final EIS and ROD in the **Federal Register**.

Reviewer's Obligation to Comment—The Forest Service believes it is important at this early stage to give reviewers notice of several court rulings related to public participation in the environmental review process. First, reviewers of the draft EIS must structure their participation in the environmental review of the proposal in such a way that it is meaningful and alerts an agency to the reviewer's position and contentions. *Vermont Yankee Nuclear Power Corp.* v. *NRDC,* 435 U.S. 519, 513 (1978). Also, environmental objections that could be raised at the draft EIS stage but that are not raised until after completion of the final EIS may be waived or dismissed by the courts. *City of Angoon* v. *Hodel,* 803 F.2d 1016, 1022 (9th Cir, 1986), and *Wisconsin Heritages Inc.* v. *Harris,* 490 F. Supp. 1334, 1338 (E.D. Wis., 1980). Because of these court rulings, it is very important that those interested in this proposed action participate by the close of the 45-day comment period of the draft EIS in order that substantive comments and objections are available to the Forest Service at a time when it can meaningfully consider them and respond to them in the final EIS. To assist the Forest Service in identifying and considering issues and concerns on the proposed action, comments should be as specific as possible. Reviewers may wish to refer to the Council on Environmental Quality Regulations for implementing the procedural provisions of the National Environmental Policy Act at 40 CFR 1503.3 in addressing these points.

Dated: September 24, 2012.

Jason Kling,

District Ranger, Richfield Ranger District, Fishlake National Forest, 115 East 900 North, Richfield, Utah 84701.

[FR Doc. 2012–24317 Filed 10–2–12; 8:45 am]

BILLING CODE 3410–11–P

DEPARTMENT OF AGRICULTURE

Forest Service

Notice of Proposed New Fee Sites; Federal Lands Recreation Enhancement Act

AGENCY: Caribou-Targhee National Forest, USDA, Forest Service.

ACTION: Notice New Fee Site.

SUMMARY: The Caribou-Targhee National Forest is proposing to begin charging fees at the Al Taylor Cabin. Facilities at the site have recently been reconstructed and amenities have been added to improve services and experiences. Fees are assessed based on the level of amenities and services provided, cost of operation and maintenance, market assessment, and public comment. Funds from fees would be used for the continued operation and maintenance of these recreation sites.

The Al Taylor cabin recently came into Forest Service ownership. It is located approximately 35 miles NE of Dubois, Idaho and 10 miles NW of Kilgore, Idaho. Access is via a gravel 2WD road. The proposed fee would be $35.00 per night and the cabin will accommodate 5–8 people.

DATES: Send any comments about these fee proposals by March 15, 2013 so comments can be compiled, analyzed and shared with a Recreation Resource Advisory Committee. New fees would begin after April 2013.

ADDRESSES: Brent Larson, Forest Supervisor, Caribou-Targhee National Forest, 1405 Hollipark Drive, Idaho Falls, Idaho 83401.

FOR FURTHER INFORMATION CONTACT: Brent Porter, Recreation Program Coordinator, (208–524–7500) or email at *ctnf_fee_comments@fs.fed.us.* Information about proposed fee changes can also be found on the Caribou-Targhee National Forest Web site: *http://www.fs.usda.gov/main/ctnf/passes-permits/recreation.*

SUPPLEMENTARY INFORMATION: The Federal Recreation Lands Enhancement Act (Title VII, Pub. L. 108–447) directed the Secretary of Agriculture to publish a six month advance notice in the **Federal Register** whenever new recreation fee areas are established.

Once public involvement is complete, these new fees will be reviewed by a Recreation Resource Advisory Committee prior to a final decision and implementation.

Dated: September 26, 2012.

Robbert Mickelsen,

Branch Chief.

[FR Doc. 2012–24210 Filed 10–2–12; 8:45 am]

BILLING CODE 3410–11–M

COMMISSION ON CIVIL RIGHTS

Agenda and Notice of Public Meeting of the Illinois Advisory Committee

Notice is hereby given, pursuant to the provisions of the rules and regulations of the U.S. Commission on Civil Rights (Commission), and the Federal Advisory Committee Act (FACA), that a briefing meeting of the Illinois Advisory Committee to the Commission will convene at 11 a.m. and adjourn at 1 p.m. on October 30, 2012, at the DePaul University College of Law, 1 East Jackson Blvd., Chicago, IL 60604. The purpose of the meeting is to host presentations on federal immigration law and Illinois policy and legislation regarding immigrants.

Members of the public are entitled to submit written comments; the comments must be received in the regional office by November 9, 2012. The address is Midwestern Regional Office, 55 W. Monroe St., Suite 410, Chicago, IL 60603. Persons wishing to email their comments or to present their comments verbally at the meeting, or who desire additional information should contact Carolyn Allen, Administrative Assistant, (312) 353–8311 or by email: *callen@usccr.gov.*

Hearing-impaired persons who will attend the meeting and require the services of a sign language interpreter should contact the Regional Office at least ten (10) working days before the scheduled date of the meeting.

Records generated from this meeting may be inspected and reproduced at the Midwestern Regional Office, as they become available, both before and after the meeting. Persons interested in the work of this advisory committee are advised to go to the Commission's Web site, *www.usccr.gov*, or to contact the Midwestern Regional Office at the above email or street address.

The meeting will be conducted pursuant to the provisions of the rules and regulations of the Commission and FACA.

Dated in Washington, DC, September 27, 2012.

Peter Minarik,

Acting Chief, Regional Programs Coordination Unit.

[FR Doc. 2012–24217 Filed 10–2–12; 8:45 am]

BILLING CODE 6335–01–P

COMMISSION ON CIVIL RIGHTS

Sunshine Act Notice

AGENCY: United States Commission on Civil Rights.

ACTION: Notice of business meeting.

DATE AND TIME: Friday, October 12, 2012; 9:30 a.m. EDT.

PLACE: 1331 Pennsylvania Ave NW., Suite 1150, Washington, DC 20425.

Meeting Agenda

This meeting is open to the public.

I. Approval of Agenda

II. Program Planning Update and Discussion of Projects

- Update on The Civil Rights Implications of Eminent Domain Abuse briefing
- Update on the Sex Trafficking: A Gender-Based Violation of Civil Rights briefing
- Update on Federal Civil Rights Engagement w/Arab & Muslim Communities Post 9/11 briefing

III. Management and Operations

- Chief of Regional Programs' report
- OGC Training: Ethics Rules Relating to Teaching, Speaking, and Writing

IV. Approval of State Advisory Committee Slates

- Colorado
- Florida
- Massachusetts
- New Jersey
- South Carolina
- West Virginia

V. Adjourn Meeting

CONTACT PERSON FOR FURTHER INFORMATION: Lenore Ostrowsky, Acting Chief, Public Affairs Unit (202) 376–8591.

Hearing-impaired persons who will attend the meeting and require the services of a sign language interpreter should contact Pamela Dunston at (202) 376–8105 or at *signlanguage@usccr.gov* at least seven business days before the scheduled date of the meeting.

Dated: October 1, 2012.

Kimberly Tolhurst,

Senior Attorney-Advisor.

[FR Doc. 2012–24513 Filed 10–1–12; 4:15 pm]

BILLING CODE 6335–01–P

DEPARTMENT OF COMMERCE

Submission for OMB Review; Comment Request

The Department of Commerce will submit to the Office of Management and Budget (OMB) for clearance the following proposal for collection of information under the provisions of the Paperwork Reduction Act (44 U.S.C. Chapter 35).

Agency: Bureau of Economic Analysis.

Title: Survey of Foreign Airline Operators' Revenues and Expenses in the United States.

OMB Control Number: 0608–0068.

Form Number(s): BE–9.

Type of Request: Extension of a currently approved collection.

Burden Hours: 1,020.

Number of Respondents: 50 per quarter; 200 annually.

Average Hours per Response: 6 hours for mandatory responses and 1 hour for other (non-mandatory) responses.

Needs and Uses: The data are needed to monitor U.S. international trade in transportation services, to analyze its impact on the U.S. economy and foreign economies, to compile and improve the U.S. economic accounts, to support U.S. commercial policy on trade in transportation services, to conduct trade promotion, and to improve the ability of U.S. businesses to identify and evaluate market opportunities.

Affected Public: U.S. agents of foreign air carriers.

Frequency: Quarterly.

Respondent's Obligation: Mandatory.

Legal Authority: Title 22 U.S.C., Sections 3101–3108, as amended.

OMB Desk Officer: Paul Bugg, (202) 395–3093.

You may obtain copies of the above information collection proposal by writing Jennifer Jessup, Departmental Paperwork Clearance Officer, Department of Commerce, Room 6616, 14th and Constitution Avenue NW., Washington, DC 20230, or via email at *jjessup@doc.gov*.

Send comments on the proposed information collection within 30 days of publication of this notice to Paul Bugg, OMB Desk Officer, via email at *pbugg@omb.eop.gov,* or by Fax at 202–395–7245.

Dated: September 28, 2012.

Glenna Mickelson,

Management Analyst, Office of Chief Information Officer.

[FR Doc. 2012–24304 Filed 10–2–12; 8:45 am]

BILLING CODE 3510–06–P

DEPARTMENT OF COMMERCE

Submission for OMB Review; Comment Request

The Department of Commerce will submit to the Office of Management and Budget (OMB) for clearance the following proposal for collection of information under the provisions of the Paperwork Reduction Act (44 U.S.C. Chapter 35).

Agency: Bureau of Economic Analysis.

Title: Ocean Freight Revenues and Foreign Expenses of United States Carriers; U.S. Airline Operator's Foreign Revenues and Expenses.

OMB Control Number: 0608–0011.

Form Number(s): BE–30, BE–37.

Type of Request: Extension of a currently approved collection.

Burden Hours: 736.

Number of Respondents: 55 per quarter; 220 annually.

Average Hours per Response: For each survey, 4 hours for mandatory responses and 1 hour for other (non-mandatory) responses.

Needs and Uses: The data are needed to monitor U.S. international trade in transportation services, to analyze its impact on the U.S. economy and foreign economies, to compile and improve the U.S. economic accounts, to support U.S. commercial policy on trade in transportation services, to conduct trade promotion, and to improve the ability of U.S. businesses to identify and evaluate market opportunities.

Affected Public: U.S. ocean freight carriers (owners and operators) and U.S. airline operators.

Frequency: Quarterly.

Respondent's Obligation: Mandatory.

Legal Authority: Title 22 U.S.C., Sections 3101–3108, as amended.

OMB Desk Officer: Paul Bugg, (202) 395–3093.

You may obtain copies of the above information collection proposal by writing Jennifer Jessup, Departmental Paperwork Clearance Officer, Department of Commerce, Room 6616, 14th and Constitution Avenue NW., Washington, DC 20230, or via email at *jjessup@doc.gov*.

Send comments on the proposed information collection within 30 days of publication of this notice to Paul Bugg, OMB Desk Officer, via email at *pbugg@omb.eop.gov,* or by FAX at 202–395–7245.

Dated: September 28, 2012.

Glenna Mickelson,

Management Analyst, Office of Chief Information Officer.

[FR Doc. 2012–24308 Filed 10–2–12; 8:45 am]

BILLING CODE 3510–06–P

DEPARTMENT OF COMMERCE

Bureau of Industry and Security

Order Denying Export Privileges

In the Matter of: Jirair Avanessian, a/k/a Jirair Hijiabadi Avanessian, a/k/a Jirair H. Avanessian, a/k/a Jerry Avanessian, a/k/a Jerry Avanes, 1156 Winchester Avenue, Glendale, CA 91201.

On July 6, 2011, in the U.S. District Court, Central District of California, Jirair Avanessian, a/k/a Jirair Hijiabadi Avanessian, a/k/a Jirair H. Avanessian, a/k/a Jerry Avanessian, and a/k/a Jerry Avanes (''Avanessian'') was convicted of violating the International Emergency Economic Powers Act (50 U.S.C. 1701, *et seq.* (2000)) (''IEEPA''). Specifically, Avanessian was convicted of one count of violating IEEPA by knowingly and willfully violating and causing to be violated the United States trade restriction with Iran by exporting and attempting to export vacuum pumps and related equipment parts to Iran, via the United Arab Emirates, without first having obtained the required license or authorization from the United States Department of Treasury, Office of Foreign Assets Control for such an export. Avanessian was also convicted of one count of conspiracy (18 U.S.C. 371) to violate IEEPA and one count of money laundering (19 U.S.C. 1956 (h)). Avanessian was sentenced to 18 months in prison followed by a three-year supervised release. Avanessian was also ordered to pay a $10,000 fine and a $300 special assessment. Avanessian was released from prison on December 9, 2011.

Section 766.25 of the Export Administration Regulations (''EAR'' or ''Regulations'') [1] provides, in pertinent part, that ''[t]he Director of the Office of Exporter Services, in consultation with the Director of the Office of Export Enforcement, may deny the export privileges of any person who has been convicted of a violation of the [Export Administration Act (''EAA'')], the EAR, or any order, license or authorization issued thereunder; any regulation, license, or order issued under the International Emergency Economic Powers Act (50 U.S.C. 1701–1706); 18 U.S.C. 793, 794 or 798; section 4(b) of the Internal Security Act of 1950 (50 U.S.C. 783(b)), or section 38 of the Arms Export Control Act (22 U.S.C. 2778).'' 15 CFR. 766.25(a); see also Section 11(h) of the EAA, 50 U.S.C. app. 2410(h). The denial of export privileges under this provision may be for a period of up to 10 years from the date of the conviction. 15 CFR 766.25(d); see also 50 U.S.C. app. 2410(h). In addition, Section 750.8 of the Regulations states that the Bureau of Industry and Security's Office of Exporter Services may revoke any Bureau of Industry and Security (''BIS'') licenses previously issued in which the person had an interest in at the time of his conviction.

I have received notice of Avanessian's conviction for violating IEEPA, and have provided notice and an opportunity for Avanessian to make a written submission to BIS, as provided in Section 766.25 of the Regulations. I have not received a submission from Avanessian. Based upon my review and consultations with BIS's Office of Export Enforcement, including its Director, and the facts available to BIS, I have decided to deny Avanessian's export privileges under the Regulations for a period of 10 years from the date of Avanessian's conviction. I have also decided to revoke all licenses issued pursuant to the Act or Regulations in which Avanessian had an interest at the time of his conviction.

Accordingly, it is hereby

Ordered

I. Until July 6, 2021, Jirair Avanessian, a/k/a Jirair Hijiabadi Avanessian, a/k/a Jirair H. Avanessian, a/k/a Jerry Avanessian, and a/k/a Jerry Avanes, with a last known address at: 1156 Winchester Avenue, Glendale, CA 91201, and when acting for or on behalf of Avanessian, his representatives, assigns, agents or employees (the ''Denied Person''), may not, directly or indirectly, participate in any way in any transaction involving any commodity, software or technology (hereinafter collectively referred to as ''item'') exported or to be exported from the United States that is subject to the Regulations, including, but not limited to:

A. Applying for, obtaining, or using any license, License Exception, or export control document;

B. Carrying on negotiations concerning, or ordering, buying, receiving, using, selling, delivering, storing, disposing of, forwarding, transporting, financing, or otherwise servicing in any way, any transaction involving any item exported or to be exported from the United States that is subject to the Regulations, or in any other activity subject to the Regulations; or

C. Benefitting in any way from any transaction involving any item exported or to be exported from the United States that is subject to the Regulations, or in any other activity subject to the Regulations.

II. No person may, directly or indirectly, do any of the following:

A. Export or reexport to or on behalf of the Denied Person any item subject to the Regulations;

B. Take any action that facilitates the acquisition or attempted acquisition by the Denied Person of the ownership, possession, or control of any item subject to the Regulations that has been or will be exported from the United States, including financing or other support activities related to a transaction whereby the Denied Person acquires or attempts to acquire such ownership, possession or control;

C. Take any action to acquire from or to facilitate the acquisition or attempted acquisition from the Denied Person of any item subject to the Regulations that has been exported from the United States;

D. Obtain from the Denied Person in the United States any item subject to the Regulations with knowledge or reason to know that the item will be, or is intended to be, exported from the United States; or

E. Engage in any transaction to service any item subject to the Regulations that has been or will be exported from the United States and which is owned, possessed or controlled by the Denied Person, or service any item, of whatever origin, that is owned, possessed or controlled by the Denied Person if such service involves the use of any item subject to the Regulations that has been or will be exported from the United States. For purposes of this paragraph, servicing means installation, maintenance, repair, modification or testing.

III. After notice and opportunity for comment as provided in Section 766.23 of the Regulations, any other person, firm, corporation, or business organization related to Avanessian by affiliation, ownership, control or position of responsibility in the conduct of trade or related services may also be subject to the provisions of this Order if necessary to prevent evasion of the Order.

IV. This Order does not prohibit any export, reexport, or other transaction subject to the Regulations where the only items involved that are subject to the Regulations are the foreign-produced direct product of U.S.-origin technology.

[1] The Regulations are currently codified in the Code of Federal Regulations at 15 CFR Parts 730–774 (2012). The Regulations issued pursuant to the Export Administration Act (50 U.S.C. app. 2401–2420 (2000)) (''EAA''). Since August 21, 2001, the EAA has been in lapse and the President, through Executive Order 13222 of August 17, 2001 (3 CFR, 2001 Comp. 783 (2002)), which has been extended by successive Presidential Notices, the most recent being that of August 15, 2012 (77 FR 49699 (Aug. 16, 2012)), has continued the Regulations in effect under the International Emergency Economic Powers Act (50 U.S.C. 1701, *et seq.* (2000)).

V. This Order is effective immediately and shall remain in effect until July 6, 2021.

VI. In accordance with Part 756 of the Regulations, Avanessian may file an appeal of this Order with the Under Secretary of Commerce for Industry and Security. The appeal must be filed within 45 days from the date of this Order and must comply with the provisions of Part 756 of the Regulations.

VII. A copy of this Order shall be delivered to the Avanessian. This Order shall be published in the **Federal Register**.

Issued this 27th day of September, 2012.

Bernard Kritzer,

Director, Office of Exporter Services.

[FR Doc. 2012–24324 Filed 10–2–12; 8:45 am]

BILLING CODE P

DEPARTMENT OF COMMERCE

Bureau of Industry and Security

Order Denying Export Privileges

In the Matter of: Anna Fermanova, 4708 Nocona Drive, Plano, TX 75024.

On October 24, 2011, in the U.S. District Court, Eastern District of New York, Anna Fermanova (''Fermanova'') was convicted of violating Section 38 of the Arms Export Control Act (22 U.S.C. 2778 (2000)) (''AECA''). Specifically, Fermanova was convicted of knowingly and willfully attempting to export from the United States to Russia night sighting equipment specifically designed, modified and configured for military use, specifically one Raptor Night Vision Weapon Sight, Model M644–4X and two Advanced Rifle Sights, Model D–740–3A, defense articles that were listed on the United States Munitions List, without first obtaining the required license or written approval from the State Department. Fermanova was sentenced to four months in prison, four months of home arrest followed by three years supervised release. Fermanova was also ordered to pay a $1,000 fine and a $100 assessment. Fermanova was released from prison on May 4, 2012. Fermanova is also listed on the U.S. Department of State Debarred List.

Section 766.25 of the Export Administration Regulations (''EAR'' or ''Regulations'')[1] provides, in pertinent part, that ''[t]he Director of the Office of Exporter Services, in consultation with the Director of the Office of Export Enforcement, may deny the export privileges of any person who has been convicted of a violation of the [Export Administration Act (''EAA'')], the EAR, or any order, license or authorization issued thereunder; any regulation, license, or order issued under the International Emergency Economic Powers Act (50 U.S.C. 1701–1706); 18 U.S.C. 793, 794 or 798; section 4(b) of the Internal Security Act of 1950 (50 U.S.C. 783(b)), or section 38 of the Arms Export Control Act (22 U.S.C. 2778).'' 15 CFR 766.25(a); see also Section 11(h) of the EAA, 50 U.S.C. app. 2410(h). The denial of export privileges under this provision may be for a period of up to 10 years from the date of the conviction. 15 CFR 766.25(d); see also 50 U.S.C. app. 2410(h). In addition, Section 750.8 of the Regulations states that the Bureau of Industry and Security's Office of Exporter Services may revoke any Bureau of Industry and Security (''BIS'') licenses previously issued in which the person had an interest at the time of her conviction.

I have received notice of Fermanova's conviction for violating AECA, and have provided notice and an opportunity for Fermanova to make a written submission to BIS, as provided in Section 766.25 of the Regulations. I have not received a submission from Fermanova. Based upon my review and consultations with BIS's Office of Export Enforcement, including its Director, and the facts available to BIS, I have decided to deny Fermanova's export privileges under the Regulations for a period of five years from the date of Fermanova's conviction. I have also decided to revoke all licenses issued pursuant to the Act or Regulations in which Fermanova had an interest at the time of her conviction.

Accordingly, it is hereby

Ordered

I. Until October 24, 2016, Anna Fermanova, with a last known address at: 4708 Nocona Drive, Plano, TX 75024, and when acting for or on behalf of Fermanova, her representatives, assigns, agents or employees (the ''Denied Person''), may not, directly or indirectly, participate in any way in any transaction involving any commodity, software or technology (hereinafter collectively referred to as ''item'') exported or to be exported from the United States that is subject to the Regulations, including, but not limited to:

A. Applying for, obtaining, or using any license, License Exception, or export control document;

B. Carrying on negotiations concerning, or ordering, buying, receiving, using, selling, delivering, storing, disposing of, forwarding, transporting, financing, or otherwise servicing in any way, any transaction involving any item exported or to be exported from the United States that is subject to the Regulations, or in any other activity subject to the Regulations; or

C. Benefitting in any way from any transaction involving any item exported or to be exported from the United States that is subject to the Regulations, or in any other activity subject to the Regulations.

II. No person may, directly or indirectly, do any of the following:

A. Export or reexport to or on behalf of the Denied Person any item subject to the Regulations;

B. Take any action that facilitates the acquisition or attempted acquisition by the Denied Person of the ownership, possession, or control of any item subject to the Regulations that has been or will be exported from the United States, including financing or other support activities related to a transaction whereby the Denied Person acquires or attempts to acquire such ownership, possession or control;

C. Take any action to acquire from or to facilitate the acquisition or attempted acquisition from the Denied Person of any item subject to the Regulations that has been exported from the United States;

D. Obtain from the Denied Person in the United States any item subject to the Regulations with knowledge or reason to know that the item will be, or is intended to be, exported from the United States; or

E. Engage in any transaction to service any item subject to the Regulations that has been or will be exported from the United States and which is owned, possessed or controlled by the Denied Person, or service any item, of whatever origin, that is owned, possessed or controlled by the Denied Person if such service involves the use of any item subject to the Regulations that has been or will be exported from the United States. For purposes of this paragraph, servicing means installation, maintenance, repair, modification or testing.

III. After notice and opportunity for comment as provided in Section 766.23 of the Regulations, any other person,

[1] The Regulations are currently codified in the Code of Federal Regulations at 15 CFR Parts 730–774 (2012). The Regulations issued pursuant to the Export Administration Act (50 U.S.C. app. 2401–2420 (2000)) (''EAA''). Since August 21, 2001, the EAA has been in lapse and the President, through Executive Order 13222 of August 17, 2001 (3 CFR, 2001 Comp. 783 (2002)), which has been extended by successive Presidential Notices, the most recent being that of August 15, 2012 (77 FR 49699 (Aug. 16, 2012)), has continued the Regulations in effect under the International Emergency Economic Powers Act (50 U.S.C. 1701, *et seq.* (2000)).

firm, corporation, or business organization related to Fermanova by affiliation, ownership, control or position of responsibility in the conduct of trade or related services may also be subject to the provisions of this Order if necessary to prevent evasion of the Order.

IV. This Order does not prohibit any export, reexport, or other transaction subject to the Regulations where the only items involved that are subject to the Regulations are the foreign-produced direct product of U.S.-origin technology.

V. This Order is effective immediately and shall remain in effect until October 24, 2016.

VI. In accordance with Part 756 of the Regulations, Fermanova may file an appeal of this Order with the Under Secretary of Commerce for Industry and Security. The appeal must be filed within 45 days from the date of this Order and must comply with the provisions of Part 756 of the Regulations.

VII. A copy of this Order shall be delivered to Fermanova. This Order shall be published in the **Federal Register**.

Issued this 27th day of September, 2012.

Bernard Kritzer,

Director, Office of Exporter Services.

[FR Doc. 2012–24328 Filed 10–2–12; 8:45 am]

BILLING CODE P

DEPARTMENT OF COMMERCE

Bureau of Industry and Security

Order Denying Export Privileges

In the Matter of: Phillip Andro Jamison currently incarcerated at: Register Number 22433–298, USP LOMPOC, U.S. Penitentiary, 3901 Klein Blvd., Lompoc, CA 81226; and with an address at: 9912 Mark Twain Avenue, Bakersfield, CA 93312.

On November 4, 2011, in the U.S. District Court, Southern District of California, Phillip Andro Jamison (''Jamison'') was convicted of violating Section 38 of the Arms Export Control Act (22 U.S.C. 2778 (2000)) (''AECA''). Specifically, Jamison was convicted of knowingly and willfully exporting from the United States to England a defense article, that is, one L3 EOTech 553.A65 Holographic Weapon Sight, which is designated as a defense article on the United States Munitions List, without having first obtained from the Department of State a license for such export or written authorization for such export. Jamison was sentenced to 30 months in prison followed by three years of supervised release. Jamison was also ordered to pay $172,221 in restitution. Jamison is also listed on the U.S. Department of State Debarred List.

Section 766.25 of the Export Administration Regulations (''EAR'' or ''Regulations'') [1] provides, in pertinent part, that ''[t]he Director of the Office of Exporter Services, in consultation with the Director of the Office of Export Enforcement, may deny the export privileges of any person who has been convicted of a violation of the [Export Administration Act (''EAA'')], the EAR, or any order, license or authorization issued thereunder; any regulation, license, or order issued under the International Emergency Economic Powers Act (50 U.S.C. 1701–1706); 18 U.S.C. 793, 794 or 798; section 4(b) of the Internal Security Act of 1950 (50 U.S.C. 783(b)), or section 38 of the Arms Export Control Act (22 U.S.C. 2778).'' 15 CFR 766.25(a); see also Section 11(h) of the EAA, 50 U.S.C. app. 2410(h). The denial of export privileges under this provision may be for a period of up to 10 years from the date of the conviction. 15 CFR 766.25(d); see also 50 U.S.C. app. 2410(h). In addition, Section 750.8 of the Regulations states that the Bureau of Industry and Security's Office of Exporter Services may revoke any Bureau of Industry and Security (''BIS'') licenses previously issued in which the person had an interest in at the time of his conviction.

I have received notice of Jamison's conviction for violating AECA, and have provided notice and an opportunity for Jamison to make a written submission to BIS, as provided in Section 766.25 of the Regulations. I have not received a submission from Jamison. Based upon my review and consultations with BIS's Office of Export Enforcement, including its Director, and the facts available to BIS, I have decided to deny Jamison's export privileges under the Regulations for a period of 10 years from the date of Jamison's conviction. I have also decided to revoke all licenses issued pursuant to the Act or Regulations in which Jamison had an interest at the time of his conviction.

Accordingly, it is hereby

[1] The Regulations are currently codified in the Code of Federal Regulations at 15 CFR parts 730–774 (2012). The Regulations issued pursuant to the Export Administration Act (50 U.S.C. app. 2401–2420 (2000)) (''EAA''). Since August 21, 2001, the EAA has been in lapse and the President, through Executive Order 13222 of August 17, 2001 (3 CFR, 2001 Comp. 783 (2002)), which has been extended by successive Presidential Notices, the most recent being that of August 15, 2012 (77 FR 49699 (Aug. 16, 2012)), has continued the Regulations in effect under the International Emergency Economic Powers Act (50 U.S.C. 1701, *et seq.* (2000)).

Ordered

I. Until November 4, 2021, Phillip Andro Jamison, with last known addresses at: currently incarcerated at: Register Number 22433–298, USP LOMPOC, U.S. Penitentiary, 3901 Klein Blvd., Lompoc, CA 81226, and with an address at: 9912 Mark Twain Avenue, Bakersfield, CA 93312, and when acting for or on behalf of Jamison, his representatives, assigns, agents or employees (the ''Denied Person''), may not, directly or indirectly, participate in any way in any transaction involving any commodity, software or technology (hereinafter collectively referred to as ''item'') exported or to be exported from the United States that is subject to the Regulations, including, but not limited to:

A. Applying for, obtaining, or using any license, License Exception, or export control document;

B. Carrying on negotiations concerning, or ordering, buying, receiving, using, selling, delivering, storing, disposing of, forwarding, transporting, financing, or otherwise servicing in any way, any transaction involving any item exported or to be exported from the United States that is subject to the Regulations, or in any other activity subject to the Regulations; or

C. Benefitting in any way from any transaction involving any item exported or to be exported from the United States that is subject to the Regulations, or in any other activity subject to the Regulations.

II. No person may, directly or indirectly, do any of the following:

A. Export or reexport to or on behalf of the Denied Person any item subject to the Regulations;

B. Take any action that facilitates the acquisition or attempted acquisition by the Denied Person of the ownership, possession, or control of any item subject to the Regulations that has been or will be exported from the United States, including financing or other support activities related to a transaction whereby the Denied Person acquires or attempts to acquire such ownership, possession or control;

C. Take any action to acquire from or to facilitate the acquisition or attempted acquisition from the Denied Person of any item subject to the Regulations that has been exported from the United States;

D. Obtain from the Denied Person in the United States any item subject to the Regulations with knowledge or reason to know that the item will be, or is intended to be, exported from the United States; or

E. Engage in any transaction to service any item subject to the Regulations that has been or will be exported from the United States and which is owned, possessed or controlled by the Denied Person, or service any item, of whatever origin, that is owned, possessed or controlled by the Denied Person if such service involves the use of any item subject to the Regulations that has been or will be exported from the United States. For purposes of this paragraph, servicing means installation, maintenance, repair, modification or testing.

III. After notice and opportunity for comment as provided in Section 766.23 of the Regulations, any other person, firm, corporation, or business organization related to Jamison by affiliation, ownership, control or position of responsibility in the conduct of trade or related services may also be subject to the provisions of this Order if necessary to prevent evasion of the Order.

IV. This Order does not prohibit any export, reexport, or other transaction subject to the Regulations where the only items involved that are subject to the Regulations are the foreign-produced direct product of U.S.-origin technology.

V. This Order is effective immediately and shall remain in effect until November 4, 2021.

VI. In accordance with Part 756 of the Regulations, Jamison may file an appeal of this Order with the Under Secretary of Commerce for Industry and Security. The appeal must be filed within 45 days from the date of this Order and must comply with the provisions of Part 756 of the Regulations.

VII. A copy of this Order shall be delivered to the Jamison. This Order shall be published in the **Federal Register**.

Issued this 27th day of September, 2012.

Bernard Kritzer,

Director, Office of Exporter Services.

[FR Doc. 2012–24322 Filed 10–2–12; 8:45 am]

BILLING CODE P

DEPARTMENT OF COMMERCE

International Trade Administration

Renewable Energy Policy Business Roundtable in Japan

AGENCY: International Trade Administration, Department of Commerce.

ACTION: Notice.

SUMMARY: The U.S. Department of Commerce's International Trade Administration will lead a delegation of U.S. companies to participate in a Renewable Energy Policy Business Roundtable, which will be held on December 3, 2012 in Tokyo in conjunction with the U.S.-Japan Energy Policy Dialogue. The U.S. Department of Energy—the lead U.S. agency for the bilateral discussions—will co-chair the roundtable.

Following the roundtable, the delegation will travel to the northeast region for site visits. Participating companies will learn firsthand the current condition of reconstruction following the March 2011 earthquake and tsunami, and the role of renewable energy in those efforts, including local government incentives. Upon returning to Tokyo, optional business counseling will be provided by the U.S. Department of Commerce's Commercial Service.

Information on how to register (including applicable fees) for the roundtable, site visits, and business counseling will be posted online at: *http://www.export.gov/reee.*

DATES: The roundtable and other related events will be held in Japan the week of December 3–7, 2012. Participants must register online no later than October 31, 2012. Applications will be taken on a first-come, first-served basis due to space limitations.

FOR FURTHER INFORMATION CONTACT: Cora Dickson, Manufacturing and Services, Office of Energy and Environmental Industries, Phone: 202–482–6083, Email: *Cora.Dickson@trade.gov.* Gregory Briscoe, U.S. Commercial Service Tokyo, Phone: +81–3–3224–5088, Email: *Gregory.Briscoe@trade.gov.*

SUPPLEMENTARY INFORMATION: A Japanese Cabinet advisory panel recently recommended that Japan phase out nuclear power by the 2030s, increase its reliance on renewable energy, and take steps to improve energy efficiency. In 2011, approximately 10 percent of Japan's electricity was derived from renewable energy. This percentage is expected to increase as various incentives, such as a new feed-in tariff system (for solar, wind, geothermal, small micro/small/medium hydro, and biomass/biogas), are introduced to promote investor confidence in renewable energy projects. A long-term reform process in the electricity sector is also taking shape that may allow for more diversity in energy sources as well as hasten the deployment of smart grid technology.

All of these factors point towards potential business opportunities for American companies. U.S. clean energy companies that want to sell products and services in Japan can benefit from a deeper understanding of the changing Japanese policy and regulatory landscape, from the viewpoint of both Japan's policymakers and representatives from the private sector, who will also join the roundtable. A frank and open discussion about renewable energy will enhance the bilateral Energy Policy Dialogue by identifying key policy issues and sharing best practices.

Dated: September 27, 2012.

Catherine Vial,

Team Lead, Environmental Industries, Office of Energy and Environmental Industries.

[FR Doc. 2012–24297 Filed 10–2–12; 8:45 am]

BILLING CODE 3510–DR–P

DEPARTMENT OF COMMERCE

National Oceanic and Atmospheric Administration

RIN 0648–XC264

Caribbean Fishery Management Council; Public Meeting

AGENCY: National Marine Fisheries Service (NMFS), National Oceanic and Atmospheric Administration (NOAA), Commerce.

ACTION: Notice of public meetings.

SUMMARY: The Caribbean Fishery Management Council's Scientific and Statistical Committee (SSC) will hold meetings.

DATES: The SSC meetings will be held on October 30th, 31st and November 1st, 2012.

ADDRESSES: The meetings will be held at the Verdanza Hotel, 8020 Tartak St., IslaVerde, Puerto Rico.

FOR FURTHER INFORMATION CONTACT: Caribbean Fishery Management Council, 268 Muñoz Rivera Avenue, Suite 1108, San Juan, Puerto Rico 00918–1920, telephone: (787) 766–5926.

SUPPLEMENTARY INFORMATION: The SSC will meet to discuss the items contained in the following agenda:

October 30, 2012

—Call to order
—Adoption of Agenda
—Presentations on:
  a. SEFSC—Summary of Data for Species Units ACLs
  Commercial Puerto Rico Data
  Commercial St. Thomas Data
  Commercial St. Croix Data
  Recreational Puerto Rico Data
  SEFSC—Summary TIP Data
  b. SERO—Species Units Projected to Exceed ACLs by the end of Calendar Year 2012
  c. USVI—Changes in Commercial

Fisher Data Collection and Reporting in the USVI
Commercial St. Thomas Data
Commercial St. Croix Data
d. Puerto Rico—Changes in Commercial Fishery Data Collection and Reporting in Puerto Rico
e. Puerto Rico—Changes in Recreational Data Collection
f. Ancillary Data—Fishery Independent Reports
—Recommendations to CFMC Regarding the Variables Affecting ACLs and Suggested Course of Actions

October 31, 2012

—Recommendations to CFMC Regarding 5-year Priority Research Needs

November 1, 2012

—Recommendations to CFMC Regarding 5-year Priority Research Needs (Continuation)
—Queen Conch Listing Update
—Other Business
—Adjourn

The SSC will convene on October 30th, 31st and November 1st, 2012, from 9 a.m. until 5 p.m., to discuss several issues related to the catch limits (ACLs). At the 143rd CFMC, it was reported that some ACLs are expected to be overrun in the US Caribbean.

The final Rule triggers accountability measures (AMs) if an ACL has been exceeded based on a moving multi-year average of landings. If the ACL for a species or species group is exceeded, the fishing season for the affected species will be reduced. The AM will be triggered unless NMFS SEFSC, in consultation with the CFMC and its SSC determine the ACL was exceeded because of enhanced data collection and monitoring efforts instead of an increase in total catch of the species or species group.

The SSC was charged with the determination of whether the numbers provided are a result of better data gathering or ''real'' overrun of the ACLs.

The meetings are open to the public, and will be conducted in English. Fishers and other interested persons are invited to attend and participate with oral or written statements regarding agenda issues.

Although non-emergency issues not contained in this agenda may come before this group for discussion, those issues may not be the subject of formal action during these meetings. Action will be restricted to those issues specifically listed in this notice and any issues arising after publication of this notice that require emergency action under section 305(c) of the Magnuson-Stevens Fishery Conservation and Management Act, provided the public has been notified of the Council's intent to take final action to address the emergency.

Special Accommodations

These meetings are physically accessible to people with disabilities. For more information or request for sign language interpretation and/other auxiliary aids, please contact Mr. Miguel A. Rolón, Executive Director, Caribbean Fishery Management Council, 268 Muñoz Rivera Avenue, Suite 1108, San Juan, Puerto Rico, 00918–1920, telephone (787) 766–5926, at least 5 days prior to the meeting date.

Dated: September 28, 2012.

Tracey L. Thompson,

Acting Deputy Director, Office of Sustainable Fisheries, National Marine Fisheries Service.

[FR Doc. 2012–24314 Filed 10–2–12; 8:45 am]

BILLING CODE 3510–22–P

DEPARTMENT OF COMMERCE

National Oceanic and Atmospheric Administration

RIN 0648–XC257

Caribbean Fishery Management Council (CFMC); Public Meeting

AGENCY: National Marine Fisheries Service (NMFS), National Oceanic and Atmospheric Administration (NOAA), Commerce.

ACTION: Notice of a public meeting.

SUMMARY: The Caribbean Fishery Management Council's (Council) Outreach and Education Advisory Panel (OEAP) will hold a meeting.

DATES: The OEAP meeting will be held on October 30, 2012, from 9 a.m. to 5 p.m.

ADDRESSES: The meeting will be held at the Verdanza Hotel, 8020 Tartak St., Isla Verde, Puerto Rico.

FOR FURTHER INFORMATION CONTACT: Caribbean Fishery Management Council, 268 Muñoz Rivera Avenue, Suite 1108, San Juan, Puerto Rico 00918–1920, telephone: (787) 766–5926.

SUPPLEMENTARY INFORMATION: The OEAP will meet to discuss the items contained in the following agenda:

—Call to order
—OEAP President report
—143rd CFMC meeting
—2013 Calendar subgroup meeting
—Status of Outreach and Education Strategic Plan
—Recommendations received
—O & E Proposals received (USVI, UPRSG)
—Ongoing activities
—2013 Calendar
—Newsletter
—Web page
—Fact Sheets
—CFMC brochure
—Other Business
—Next OEAP meeting

The meeting is open to the public, and will be conducted in English. Fishers and other interested persons are invited to attend and participate with oral or written statements regarding agenda issues.

Although non-emergency issues not contained in this agenda may come before this group for discussion, those issues may not be the subject of formal action during this meeting. Action will be restricted to those issues specifically listed in this notice and any issues arising after publication of this notice that require emergency action under section 305(c) of the Magnuson-Stevens Fishery Conservation and Management Act, provided the public has been notified of the Council's intent to take final action to address the emergency.

Special Accommodations

This meeting is physically accessible to people with disabilities. For more information or request for sign language interpretation and/other auxiliary aids, please contact Mr. Miguel A. Rolón, Executive Director, Caribbean Fishery Management Council, 268 Muñoz Rivera Avenue, Suite 1108, San Juan, Puerto Rico, 00918–1920, telephone: (787) 766–5926, at least 5 days prior to the meeting date.

Dated: September 28, 2012.

Tracey L. Thompson,

Acting Deputy Director, Office of Sustainable Fisheries, National Marine Fisheries Service.

[FR Doc. 2012–24313 Filed 10–2–12; 8:45 am]

BILLING CODE 3510–22–P

DEPARTMENT OF COMMERCE

National Oceanic and Atmospheric Administration

RIN 0648–XC148

Migratory Bird Conservation; Executive Order 13186

AGENCY: National Marine Fisheries Service (NMFS), National Oceanic and Atmospheric Administration (NOAA), Commerce.

ACTION: Notice of availability.

SUMMARY: This notice announces the availability of the final signed Memorandum of Understanding (MOU) between the National Marine Fisheries Service (NMFS) and the U.S. Fish and

Wildlife Service (FWS) to promote the conservation of migratory birds.

DATES: This MOU went into effect on July 17, 2012, the date it was signed.

FOR FURTHER INFORMATION CONTACT: Kim Rivera, (907) 586–7424, email *Kim.Rivera@noaa.gov.*

SUPPLEMENTARY INFORMATION: On January 10, 2001, President Clinton signed Eexecutive Order (EO) 13186, ''Responsibilities of Federal Agencies to Protect Migratory Birds''. One of the requirements of E.O. 13186 is that each Federal agency taking actions that have, or are likely to have, a measurable negative effect on migratory bird populations is directed to develop and implement a MOU with the FWS that shall promote the conservation of migratory bird populations (E.O. 13186 Section 3(a)). On July 17, 2012, NMFS and FWS finalized this MOU to conserve migratory bird populations as prescribed by E.O. 13186. This MOU went into effect on the date it was signed.

This NMFS–FWS MOU encompasses all relevant seabird-related NMFS activities and identifies specific areas of collaboration and cooperation with FWS, including seabird bycatch reduction, information sharing and coordination, international policy and diplomacy, and habitat conservation. The MOU also provides for strengthening migratory bird conservation by identifying strategies that promote conservation and reduce adverse impacts on migratory birds through enhanced collaboration between NMFS and the FWS. In addition, This MOU identifies specific activities where cooperation between NMFS and the FWS, will contribute to the conservation of migratory birds and their habitat. These activities are intended to complement and support existing efforts and to facilitate new collaborative conservation efforts for migratory birds.

The complete text of the MOU is available at *http://www.fakr.noaa.gov/protectedresources/seabirds/mou/eo13186_nmfs_fws_mou2012.pdf.* Section 3(g) of the E.O. 13186 states that ''Each agency shall advise the public of the availability of its MOU through a notice published in the **Federal Register**.'' This notice fulfills the requirements of Section 3(g) of E.O. 13186. The E.O. is posted at *http://www.fakr.noaa.gov/protectedresources/seabirds/protectmigratory.pdf.*

Dated: September 27, 2012.

Samuel D. Rauch III,

Deputy Assistant Administrator for Regulatory Programs, Performing the functions and duties of the Assistant Administrator for Fisheries, National Marine Fisheries Service.

[FR Doc. 2012–24433 Filed 10–2–12; 8:45 am]

BILLING CODE 3510–22–P

BUREAU OF CONSUMER FINANCIAL PROTECTION

Privacy Act of 1974, as Amended

AGENCY: Bureau of Consumer Financial Protection.

ACTION: Notice of Proposed Privacy Act System of Records.

SUMMARY: In accordance with the Privacy Act of 1974, as amended, the Bureau of Consumer Financial Protection, hereinto referred to as the Consumer Financial Protection Bureau (''CFPB'' or the ''Bureau''), gives notice of the establishment of a Privacy Act System of Records.

DATES: Comments must be received no later than November 2, 2012. The new system of records will be effective November 13, 2012, unless the comments received result in a contrary determination.

ADDRESSES: You may submit comments by any of the following methods:

- *Electronic: privacy@cfpb.gov.*
- *Mail/Hand Delivery/Courier:* Claire Stapleton, Chief Privacy Officer, Consumer Financial Protection Bureau, 1700 G Street NW., Washington, DC 20552.

Comments will be available for public inspection and copying at 1700 G Street NW., Washington, DC 20552 on official business days between the hours of 10 a.m. and 5 p.m. Eastern Time. You can make an appointment to inspect comments by telephoning (202) 435–7220. All comments, including attachments and other supporting materials, will become part of the public record and subject to public disclosure. You should submit only information that you wish to make available publicly.

FOR FURTHER INFORMATION CONTACT: Claire Stapleton, Chief Privacy Officer, Consumer Financial Protection Bureau, 1700 G Street NW., Washington, DC 20552, (202) 435–7220.

SUPPLEMENTARY INFORMATION: The Dodd-Frank Wall Street Reform and Consumer Protection Act (''Act''), Public Law 111–203, Title X, established the CFPB to administer and enforce federal consumer financial law. The new system of records described in this notice ''CFPB.021—CFPB Consumer Education and Engagement Records'' will maintain records related to carrying out the functions of the CFPB's Division of Consumer Education and Engagement (''CEE''), including research relevant to improving consumer financial decision-making and well-being. Although this SORN describes the information to be collected across many CFPB projects coordinated by CEE, for each project the CFPB will collect only the information needed to accomplish the specific purpose of that project. The CFPB will maintain control over the records covered by this notice.

The report of the new system of records has been submitted to the Committee on Oversight and Government Reform of the House of Representatives, the Committee on Homeland Security and Governmental Affairs of the Senate, and the Office of Management and Budget, pursuant to Appendix I to OMB Circular A–130, ''Federal Agency Responsibilities for Maintaining Records About Individuals,'' dated November 30, 2000,[1] and the Privacy Act, 5 U.S.C. 552a(r).

The system of records entitled ''CFPB.021—CFPB Consumer Education and Engagement Records'' is published in its entirety below.

Dated: September 27, 2012.

Claire Stapleton,

Chief Privacy Officer, Bureau of Consumer Financial Protection.

CFPB.021

SYSTEM NAME:

CFPB Consumer Education and Engagement Records

SYSTEM LOCATION:

Consumer Financial Protection Bureau, 1700 G Street NW., Washington, DC 20552.

CATEGORIES OF INDIVIDUALS IN THE SYSTEM:

Individuals covered by this system are those who: participate in CFPB-sponsored or CFPB-funded financial education or financial capability programs, including financial education campaigns; utilize financial education web-tools or other financial education resources; or participate in surveys or other research conducted by the CFPB or by a third party, or by a third party on behalf of the CFPB.

[1] Although pursuant to Section 1017(a)(4)(E), of the Consumer Financial Protection Act, Public Law 111–203, the CFPB is not required to comply with OMB-issued guidance, it voluntarily follows OMB privacy-related guidance as a best practice and to facilitate cooperation and collaboration with other agencies.

CATEGORIES OF RECORDS IN THE SYSTEM:

Records in the system regarding the individuals described above may include: (1) Contact information (name, phone numbers, email address); (2) unique identifiers provided to government employees (3) information related to the participant's financial status including bank account information and records of consumer financial transactions; (4) information on consumer characteristics collected in connection with financial education programs or the consumer's business relationship with a third party; (5) bank account information (for payment to survey participants); (6) other information collected from or about consumers in response to surveys or other research methods; and (7) information relating to the effectiveness of financial education programs or resources or access to financial products or services.

AUTHORITY FOR MAINENTANCE OF THE SYSTEM:

Public Law 111–203, Title X, Sections 1013 and 1022, codified at 12 U.S.C. 5493 and 5512.

PURPOSE(S):

The Act established functions within the CFPB (1) To develop and implement initiatives to educate and empower consumers to make better informed financial decisions; (2) to develop and implement a strategy to improve the financial literacy of consumers, including access to financial information, products and services; and (3) to do research regarding, among other things, (a) consumer awareness and understanding of costs, risks, and benefits of consumer financial products or services, (b) consumer behavior with respect to consumer financial products and services, (c) experiences of traditionally underserved consumers, including un-banked and under-banked consumers, and (d) best practices and effective methods, tools, technology and strategies to educate and counsel seniors about personal finance management. Consistent with these functions, the purpose of the system is to enable the CFPB to identify and conduct effective financial education programs and also to collect, research, and publish certain information (other than personally-identifiable information) relevant to improving consumer financial decision-making skills and outcomes.

ROUTINE USES OF RECORDS MAINTAINED IN THE SYSTEM, INCLUDING CATEGORIES OF USERS AND THE PURPOSES OF SUCH USES:

These records may be disclosed, consistent with the CFPB Disclosure of Records and Information Rules, promulgated at 12 CFR part 1070 *et seq.,* to:

(1) Appropriate agencies, entities, and persons when: (a) The CFPB suspects or has confirmed that the security or confidentiality of information in the system of records has been compromised; (b) the CFPB has determined that, as a result of the suspected or confirmed compromise, there is a risk of harm to economic or property interests, identity theft or fraud, or harm to the security or integrity of this system or other systems or programs (whether maintained by the CFPB or another agency or entity) that rely upon the compromised information; and (c) the disclosure made to such agencies, entities, and persons is reasonably necessary to assist in connection with the CFPB's efforts to respond to the suspected or confirmed compromise and prevent, minimize, or remedy such harm;

(2) Another federal or state agency to (a) permit a decision as to access, amendment or correction of records to be made in consultation with or by that agency, or (b) verify the identity of an individual or the accuracy of information submitted by an individual who has requested access to or amendment or correction of records;

(3) The Office of the President in response to an inquiry from that office made at the request of the subject of a record or a third party on that person's behalf;

(4) Congressional offices in response to an inquiry made at the request of the individual to whom the record pertains;

(5) Contractors, agents, or other authorized individuals performing work on a contract, service, cooperative agreement, job, or other activity on behalf of the CFPB or Federal Government and who have a need to access the information in the performance of their duties or activities;

(6) The U.S. Department of Justice (''DOJ'') for its use in providing legal advice to the CFPB or in representing the CFPB in a proceeding before a court, adjudicative body, or other administrative body, where the use of such information by the DOJ is deemed by the CFPB to be relevant and necessary to the advice or proceeding, and such proceeding names as a party in interest:

(a) The CFPB;

(b) Any employee of the CFPB in his or her official capacity;

(c) Any employee of the CFPB in his or her individual capacity where DOJ has agreed to represent the employee; or

(d) The United States, where the CFPB determines that litigation is likely to affect the CFPB or any of its components;

(7) A court, magistrate, or administrative tribunal in the course of an administrative proceeding or judicial proceeding, including disclosures to opposing counsel or witnesses (including expert witnesses) in the course of discovery or other pre-hearing exchanges of information, litigation, or settlement negotiations, where relevant or potentially relevant to a proceeding, or in connection with criminal law proceedings;

(8) A grand jury pursuant either to a federal or state grand jury subpoena, or to a prosecution request that such record be released for the purpose of its introduction to a grand jury, where the subpoena or request has been specifically approved by a court. In those cases where the Federal Government is not a party to the proceeding, records may be disclosed if a subpoena has been signed by a judge;

(9) Appropriate federal, state, local, foreign, tribal, or self-regulatory organizations or agencies responsible for investigating, prosecuting, enforcing, implementing, issuing, or carrying out a statute, rule, regulation, order, policy, or license if the information may be relevant to a potential violation of civil or criminal law, rule, regulation, order, policy or license; and

(10) Appropriate federal, state, local, foreign, tribal or self-regulatory organizations or agencies or private entities that partner with the CFPB for research purposes.

POLICIES AND PRACTICES FOR STORING, RETRIEVING, ACCESSING, AND DISPOSING OF RECORDS IN THE SYSTEM:

STORAGE:

Paper and electronic records.

RETRIEVABILITY:

Records are retrievable by unique identifiers assigned to the records for purposes of longitudinal updating or for connecting data points across data sources, or by a variety of fields including, without limitation, the individual's name and contact information, identifying file number, or other information collected in response to surveys or other research.

SAFEGUARDS:

Access to electronic records is restricted to authorized personnel who have been issued non-transferrable access codes and passwords. Other records are maintained in locked file cabinets or rooms with access limited to those personnel whose official duties require access.

RETENTION AND DISPOSAL:

The CFPB will maintain electronic and paper records indefinitely until the National Archives and Records Administration (NARA) approves the CFPB's records disposition schedule.

SYSTEM MANAGER(S) AND ADDRESS:

Consumer Financial Protection Bureau, Associate Director, Consumer Education and Engagement, 1700 G Street NW., Washington, DC 20552.

NOTIFICATION PROCEDURE:

Individuals seeking notification and access to any record contained in this system of records, or seeking to contest its content, may inquire in writing in accordance with instructions appearing in Title 12, Chapter 10 of the CFR, ''Disclosure of Records and Information.'' Address such requests to: Chief Privacy Officer, Bureau of Consumer Financial Protection, 1700 G Street NW., Washington, DC 20552.

RECORD ACCESS PROCEDURES:

See ''Notification Procedures'' above.

CONTESTING RECORD PROCEDURES:

See ''Notification Procedures'' above.

RECORD SOURCE CATEGORIES:

Information in this system is obtained directly from the individual who is the subject of these records, and/or from third parties, including depository or non-depository institutions, credit reporting agencies, counseling agencies or other businesses or organizations or governmental entities involved in the markets for consumer financial products or services or that provide financial education services.

EXEMPTIONS CLAIMED FOR THE SYSTEM:

None.

[FR Doc. 2012–24311 Filed 10–2–12; 8:45 am]

BILLING CODE 4810–AM–P

DEPARTMENT OF DEFENSE

Office of the Secretary

[Transmittal Nos. 12–54]

36(b)(1) Arms Sales Notification

AGENCY: Defense Security Cooperation Agency, DoD.

ACTION: Notice.

SUMMARY: The Department of Defense is publishing the unclassified text of a section 36(b)(1) arms sales notification. This is published to fulfill the requirements of section 155 of Public Law 104–164 dated 21 July 1996.

FOR FURTHER INFORMATION CONTACT: Ms. B. English, DSCA/DBO/CFM, (703) 601–3740.

SUPPLEMENTARY INFORMATION: The following is a copy of a letter to the Speaker of the House of Representatives, Transmittals 12–54 with attached transmittal and policy justification.

Dated: September 26, 2012.

Morgan F. Park,

Alternate OSD Federal Register Liaison Officer, Department of Defense.

BILLING CODE 5001–06–P

DEFENSE SECURITY COOPERATION AGENCY
201 12TH STREET SOUTH, STE 203
ARLINGTON, VA 22202-5408

The Honorable John A. Boehner
Speaker of the House
U.S. House of Representatives
Washington, DC 20515

Dear Mr. Speaker:

Pursuant to the reporting requirements of Section 36(b)(1) of the Arms Export Control Act, as amended, we are forwarding herewith Transmittal No. 12-54, concerning the Department of the Air Force's proposed Letter(s) of Offer and Acceptance to Mexico for defense articles and services estimated to cost $412 million. After this letter is delivered to your office, we plan to issue a press statement to notify the public of this proposed sale.

Sincerely,

FOR William E. Landay, III
Vice Admiral, USN
Director

Enclosures:
1. Transmittal
2. Policy Justification

Transmittal No. 12-54

Notice of Proposed Issuance of Letter of Offer
Pursuant to Section 36(b)(1)
of the Arms Export Control Act, as amended

(i) Prospective Purchaser: Mexico

(ii) Total Estimated Value:

Major Defense Equipment*	$221 million
Other	$191 million
TOTAL	$412 million

(iii) Description and Quantity or Quantities of Articles or Services under Consideration for Purchase: 2 C-130J-30 aircraft, 10 AE2100D3 engines (8 installed and 2 spare), aircraft modifications, Government Furnished Equipment, communication equipment, spare and repair parts, support and test equipment, publications and technical documentation, personnel training and training equipment, U.S. Government and contractor engineering, technical and logistics support services, and other related elements of logistical and program support.

(iv) Military Department: Air Force (MX-D-SAB)

(v) Prior Related Cases, if any: None

(vi) Sales Commission, Fee, etc., Paid, Offered, or Agreed to be Paid: None

(vii) Sensitivity of Technology Contained in the Defense Article or Defense Services Proposed to be Sold: None

(viii) Date Report Delivered to Congress:

* as defined in Section 47(6) of the Arms Export Control Act.

POLICY JUSTIFICATION

Mexico – C-130J-30 Aircraft

The Government of Mexico has requested a sale of 2 C-130J-30 aircraft, 10 AE2100D3 engines (8 installed and 2 spares), aircraft modifications, Government Furnished Equipment, communication equipment, spare and repair parts, support and test equipment, publications and technical documentation, personnel training and training equipment, U.S. Government and contractor engineering, technical and logistics support services, and other related elements of logistical and program support. The estimated cost is $412 million.

This proposed sale will contribute to the foreign policy and national security of the United States by helping to improve Mexico's fight against criminal organizations, drugs, and gang activities in support of the internal security of Mexico. This proposed sale directly supports the Mexican government and serves the interests of the Mexican people and the U.S.

The proposed sale of C-130J's to Mexico will significantly increase the Mexican Air Force's capability to provide in-country airlift for the Government of Mexico. Mexico intends to utilize these aircraft to transport supplies, vehicles, and personnel in support of counter illicit-trafficking operations, humanitarian efforts, and presidential movement support airlift. Mexico, which already operates a mix of legacy C-130s, will have no difficulty absorbing these aircraft into its inventory and has requested that the sale include three years of training and sustainment in order to ensure a smooth transition.

The proposed sale of these aircraft and support will not alter the basic military balance in the region.

The prime contractor will be Lockheed Martin-Aerospace in Marietta, Georgia. There are no known offset agreements in connection with this potential sale.

Implementation of this proposed sale will require the assignment of four contractor representatives and four Field Service Representatives (two from Lockheed Martin and two from Rolls Royce) for a period of three years. Also, U.S. government personnel will be assigned to the area for a period of three years to assist the purchaser in establishing a supply system in support of flight operations, supply management, inventory control, and documentation procedures.

There will be no adverse impact on U.S. defense readiness as a result of this proposed sale.

[FR Doc. 2012–24318 Filed 10–2–12; 8:45 am]
BILLING CODE 5001–06–C

DEPARTMENT OF DEFENSE

Office of the Secretary

[Transmittal Nos. 12–26]

36(b)(1) Arms Sales Notification

AGENCY: Defense Security Cooperation Agency, DoD.

ACTION: Notice.

SUMMARY: The Department of Defense is publishing the unclassified text of a section 36(b)(1) arms sales notification. This is published to fulfill the requirements of section 155 of Public Law 104–164 dated 21 July 1996.

FOR FURTHER INFORMATION CONTACT: Ms. B. English, DSCA/DBO/CFM, (703) 601–3740.

SUPPLEMENTARY INFORMATION: The following is a copy of a letter to the Speaker of the House of Representatives, Transmittals 12–26 with attached transmittal, policy justification, and Sensitivity of Technology.

Dated: September 26, 2012.

Morgan F. Park,

Alternate OSD Federal Register Liaison Officer, Department of Defense.

BILLING CODE 5001–06–P

DEFENSE SECURITY COOPERATION AGENCY
201 12TH STREET SOUTH, STE 203
ARLINGTON, VA 22202-5408

The Honorable John A. Boehner
Speaker of the House
U.S. House of Representatives
Washington, DC 20515

SEP 21 2012

Dear Mr. Speaker:

Pursuant to the reporting requirements of Section 36(b)(1) of the Arms Export Control Act, as amended, we are forwarding herewith Transmittal No. 12-26, concerning the Department of the Navy's proposed Letter(s) of Offer and Acceptance to the Republic of Korea for defense articles and services estimated to cost $2.6 billion. After this letter is delivered to your office, we plan to issue a press statement to notify the public of this proposed sale.

Sincerely,

William E. Landay III
Vice Admiral, USN
Director

Enclosures:
1. Transmittal
2. Policy Justification
3. Sensitivity of Technology

Transmittal No. 12-26

Notice of Proposed Issuance of Letter of Offer
Pursuant to Section 36(b)(1)
of the Arms Export Control Act, as amended

(i) Prospective Purchaser: Republic of Korea

(ii) Total Estimated Value:

Major Defense Equipment*	$ 1.3 billion
Other	$ 1.3 billion
TOTAL	$ 2.6 billion

(iii) Description and Quantity or Quantities of Articles or Services under Consideration for Purchase: 36 AH-1Z COBRA Attack Helicopters, 84 T-700 GE 401C Engines (72 installed and 12 spares), 288 AGM-114K3 HELLFIRE Missiles, 72 AIM-9M-8 SIDEWINDER Missiles, integrated missile launchers, AN/AAQ-30 Target Sighting Systems (TSS) and AN/ALQ-136 Radar Frequency Jammers. The electronic warfare systems include the AN/AAR-47 Missile Warning System, AN/ALQ-144 Infrared Jammer, APX-123 Identify Friend or Foe (IFF) Mode-4 and AN/ALE-47 Chaff and Flare Decoy Dispenser, communication and support equipment, spare engine containers, spare and repair parts, tools and test equipment, technical data and publications, personnel training and training equipment, U.S. government and contractor engineering, technical, and logistics support services, and other related elements of logistics and program support.

(iv) Military Department: Navy (SEC)

(v) Prior Related Cases, if any: None

(vi) Sales Commission, Fee, etc., Paid, Offered, or Agreed to be Paid: None

(vii) Sensitivity of Technology Contained in the Defense Article or Defense Services Proposed to be Sold: See Annex attached.

(viii) Date Report Delivered to Congress: SEP 21 2012

* as defined in Section 47(6) of the Arms Export Control Act.

POLICY JUSTIFICATION

Korea – 36 AH-1Z COBRA Attack Helicopters

The Government of the Republic of Korea has requested a possible sale of 36 AH-1Z COBRA Attack Helicopters, 84 T-700 GE 401C Engines (72 installed and 12 spares), 288 AGM-114K3 HELLFIRE Missiles, 72 AIM-9M-8 SIDEWINDER Missiles, integrated missile launchers, AN/AAQ-30 Target Sighting Systems (TSS) and AN/ALQ-136 Radar Frequency Jammers. The electronic warfare systems include the AN/AAR-47 Missile Warning System, AN/ALQ-144 Infrared Jammer, APX-123 Identify Friend or Foe (IFF) Mode-4 and AN/ALE-47 Chaff and Flare Decoy Dispenser, communication and support equipment, spare engine containers spare and repair parts, tools and test equipment, technical data and publications, personnel training and training equipment, U.S. government and contractor engineering, technical and logistics support services, and other related elements of logistics and program support. The estimated cost is $2.6 billion.

The Government of Korea is one of the major political and economic powers in East Asia and the Western Pacific and a key partner of the United States in ensuring peace and stability in that region. It is vital to the U.S. national interest to assist our Korean ally in developing and maintaining a strong and ready self-defense capability.

The proposed sale of the AH-1Z COBRA helicopters will improve South Korea's capability to meet current and future threats. The sale of these AH-1Z helicopters will improve its close air support, air interdiction, armed reconnaissance, strike coordination/reconnaissance, forward air control (airborne), and aerial escort capabilities while enhancing interoperability with U.S. forces. Korea will have no difficulty absorbing these helicopters into its armed forces.

The proposed sale of this system and support will not alter the basic military balance in the region.

The prime contractors will be Bell-Textron Corporation in Amarillo, Texas, and General Electric in Lynn, Massachusetts. There are no known offset agreements proposed in connection with this potential sale.

Implementation of this proposed sale will require multiple trips to Korea involving U.S. Government or contractor representatives on a temporary basis for program and technical ort, and management oversight.

There will be no adverse impact on U.S. defense readiness as a result of this proposed sale.

Transmittal No. 12-26

Notice of Proposed Issuance of Letter of Offer
Pursuant to Section 36(b)(1)
of the Arms Export Control Act, as amended

Annex
Item No. vii

(vii) Sensitivity of Technology:

1. The AH-1Z COBRA Attack Helicopter contains new generation technology. It is equipped for a range of missions including: close air support, air interdiction, armed reconnaissance, strike coordination/reconnaissance, forward air control (airborne), and aerial escort. The navigation suite includes an LN-100G dual embedded global positioning system and inertial navigation system. The helicopter is equipped with a fully digital communications suite with ARC-210 radios for Ultra High Frequency / Very High Frequency voice communications and multi-function radio. The helicopter is fitted with the AN/AAQ-30 Target Sighting System (TSS) and AN/ALQ-136 Radar Frequency Jammer. The electronic warfare systems include the AN/AAR-47 Missile Warning System, AN/ALQ-144 Infrared Jammer, APX-123 Identify Friend or Foe (IFF) Mode-4 and AN/ALE-47 Chaff and Flare Decoy Dispenser. The helicopters will be equipped with AGM-114K3 HELLFIRE Missiles, and AIM-9M-8 SIDEWINDER Missiles. The AH-1Z, including the mission equipment, is classified Secret.

2. If a technologically advanced adversary were to obtain knowledge of the specific hardware and software elements, the information could be used to develop countermeasures which might reduce weapons systems effectiveness or be used in the development of a system with similar or advanced capabilities.

[FR Doc. 2012–24327 Filed 10–2–12; 8:45 am]
BILLING CODE 5001–06–C

DEPARTMENT OF DEFENSE

Office of the Secretary

[Transmittal Nos. 12–32]

36(b)(1) Arms Sales Notification

AGENCY: Defense Security Cooperation Agency, DoD.

ACTION: Notice.

SUMMARY: The Department of Defense is publishing the unclassified text of a section 36(b)(1) arms sales notification. This is published to fulfill the requirements of section 155 of Public Law 104–164 dated 21 July 1996.

FOR FURTHER INFORMATION CONTACT: Ms. B. English, DSCA/DBO/CFM, (703) 601–3740.

SUPPLEMENTARY INFORMATION: The following is a copy of a letter to the Speaker of the House of Representatives, Transmittals 12–32 with attached transmittal, policy justification, and Sensitivity of Technology.

Dated: September 26, 2012.

Morgan F. Park,

Alternate OSD Federal Register Liaison Officer, Department of Defense.

BILLING CODE 5001–06–P

DEFENSE SECURITY COOPERATION AGENCY
201 12TH STREET SOUTH, STE 203
ARLINGTON VA 22202-5408

SEP 21 2012

The Honorable John A. Boehner
Speaker of the House
U.S. House of Representatives
Washington, DC 20515

Dear Mr. Speaker:

Pursuant to the reporting requirements of Section 36(b)(1) of the Arms Export Control Act, as amended, we are forwarding herewith Transmittal No. 12-32, concerning the Department of the Army's proposed Letter(s) of Offer and Acceptance to the Republic of Korea for defense articles and services estimated to cost $3.6 billion. After this letter is delivered to your office, we plan to issue a press statement to notify the public of this proposed sale.

Sincerely,

Richard A. Genaille, Jr.
Deputy Director

Enclosures:
1. Transmittal
2. Policy Justification
3. Sensitivity of Technology

Transmittal No. 12-32

Notice of Proposed Issuance of Letter of Offer
Pursuant to Section 36(b)(1)
of the Arms Export Control Act, as amended

(i) Prospective Purchaser: Republic of Korea

(ii) Total Estimated Value:

Major Defense Equipment*	$2.5 billion
Other	$1.1 billion
TOTAL	$3.6 billion

(iii) Description and Quantity or Quantities of Articles or Services under Consideration for Purchase:

36 AH-64 D APACHE Longbow Block III Attack Helicopters
84 T-700-GE-701D Engines
42 Modernized Target Acquisition and Designation Sight/Modernized Pilot Night Vision Sensors
36 AN/APG-78 Fire Control Radar (FCR) with Radar Electronics Unit (Longbow Component)
36 AN/APR-48A Radar Frequency Interferometers
42 AN/APR-39 Radar Signal Detecting Sets
45 AN/AVR-2B Laser Warning Set
43 AAR-57(V) 3/5 Common Missile Warning Systems (CMWS) with 5th Sensor and Improved Countermeasure Dispensers
42 AN/APX-123 Transponders
120 Improved Helmet Display Sight Systems (IHDSS-21)
81 Embedded Global Positioning Systems with Inertial Navigation
38 30mm Automatic Chain Guns (Aircraft Component)
90 AN/ARC-201E Single Channel Ground and Airborne Radio Systems (SINCGARS) Radios
90 AN/ARC-231 Radios
42 AN/ARC-220 Radios
80 M299 HELLFIRE or Missile Launchers
400 AGM-114R1 HELLFIRE Missiles Semi-Active Lasers (SAL)
438 STINGER Block I 92H Missiles
774,144 30 mm Cartridge HEDP High Explosive Dual Purpose M789s
11,020 2.75 Inch HYDRA Rockets (Unguided)
108 APACHE Aviator Integrated Helmets (AAIH)

* as defined in Section 47(6) of the Arms Export Control Act.

Also included are training devices, simulators, generators, transportation, wheeled vehicles and organizational equipment, tools and test equipment, communication equipment, spare and repair parts, support equipment, personnel training and training equipment, publications and technical documentation, U.S. Government and contractor engineering, technical and logistics support services, and other related elements of program support.

(iv) Military Department: Army (ZCF)

(v) Prior Related Cases, if any: None

(vi) Sales Commission, Fee, etc., Paid, Offered, or Agreed to be Paid: None

(vii) Sensitivity of Technology Contained in the Defense Article or Defense Services Proposed to be Sold: See Attached Annex

(viii) Date Report Delivered to Congress:

POLICY JUSTIFICATION

Republic of Korea (ROK) – AH-64D APACHE Attack Helicopters

The Republic of Korea has requested a possible sale of

36	AH-64 D APACHE Longbow Block III Attack Helicopters
84	T-700-GE-701D Engines
42	Modernized Target Acquisition and Designation Sight/Modernized Pilot Night Vision Sensors
36	AN/APG-78 Fire Control Radar (FCR) with Radar Electronics Unit (Longbow Component)
36	AN/APR-48A Radar Frequency Interferometers
42	AN/APR-39 Radar Signal Detecting Sets
45	AN/AVR-2B Laser Warning Sets
43	AAR-57(V) 3/5 Common Missile Warning Systems (CMWS) with 5th Sensor and Improved Countermeasure Dispensers
42	AN/APX-123 Transponders
120	Improved Helmet Display Sight Systems (IHDSS-21)
81	Embedded Global Positioning Systems with Inertial Navigation
38	30mm Automatic Chain Guns (Aircraft Component)
90	AN/ARC-201E Single Channel Ground and Airborne Radio System (SINCGARS) Radios
90	AN/ARC-231 Radios
42	AN/ARC-220 Radios
80	M299 HELLFIRE or Missile Launchers
400	AGM-114R1 HELLFIRE Missiles Semi-Active Lasers (SAL)
438	STINGER Block I 92H Missiles
774,144	30 mm Cartridge HEDP High Explosive Dual Purpose M789s
11,020	2.75 Inch HYDRA Rockets (Unguided)
108	APACHE Aviator Integrated Helmets (AAIH)

Also included are training devices, simulators, generators, transportation, wheeled vehicles and organizational equipment, tools and test equipment, communication equipment, spare and repair parts, support equipment, personnel training and training equipment, publications and technical documentation, U.S. Government and contractor engineering, technical and logistics support services, and other related elements of program support. The estimated cost is $3.6 billion.

The ROK is one of the major political and economic powers in East Asia and the Western Pacific and a key partner of the United States in ensuring peace and stability in that region. It is vital to the U.S. national interest to assist our Korean ally in developing and maintaining a strong and ready self-defense capability, which will contribute to an acceptable military balance in the area.

The ROK intends to use the AH-64Ds to effectively secure its borders and littoral waters, as well as conduct counter-terrorism/counter-piracy operations. The proposed sale will provide the ROK Army with a defensive capability while enhancing interoperability with U.S. forces and other allied forces. Korea will have no difficulty absorbing these helicopters into its armed forces.

The proposed sale of this equipment and support will not alter the basic military balance in the region.

The prime contractors will be The Boeing Company in Mesa, Arizona; Lockheed Martin Corporation in Orlando, Florida; General Electric Company in Cincinnati, Ohio; Lockheed Martin Millimeter Technology in Owego, New York; and Longbow Limited Liability Corporation in Orlando, Florida. There are no known offset agreements proposed in connection with this potential sale.

Implementation of this proposed sale may require the assignment of additional U.S. contractor and U.S. Government representatives in country full-time. Contractor Field Service Representatives will be in country for post production support for an estimated three years with anticipation of a future follow on support contract or an additional Foreign Military Sales contract for support. Also, U.S. Government representatives will include a U.S. Army Aviation and Missile Life Cycle Management Command (AMCOM) field office for technical and logistical support for three years.

There will be no adverse impact on U.S. defense readiness as a result of this proposed sale.

Transmittal No. 12-32

Notice of Proposed Issuance of Letter of Offer
Pursuant to Section 36(b)(1)
of the Arms Export Control Act, as amended

Annex
Item No. vii

(vii) Sensitivity of Technology:

1. The AH-64D APACHE Attack Helicopter weapon system contains communications and target identification equipment, navigation equipment, aircraft survivability equipment, displays, and sensors. The airframe itself does not contain sensitive technology; however, the pertinent equipment listed below will be either installed on the aircraft or included in the sale.

a. The AN/APG-78 Fire Control Radar (FCR) is an active, low-probability of intercept, millimeter-wave radar combined with a passive Radar Frequency Interferometer (RFI) mounted on top of the helicopter mast. The FCR Ground Targeting Mode detects, locates, classifies and prioritizes stationary or moving armored vehicles, tanks and mobile air defense systems, as well as hovering helicopters, helicopters, and fixed wing aircraft in normal flight. The RFI detects threat radar emissions and determines the type of radar and mode of operation. The FCR data and RFI data are fused for maximum synergism. If desired, the radar data can be used to refer targets to the regular electro-optical Modernized Target Acquisition and Designation Sight (MTADS), permitting additional visual/infrared imagery and control of weapons, including the semi active laser version of the HELLFIRE. Critical system information is stored in the FCR in the form of mission executable code, target detection, classification algorithms and coded threat parametrics. This information is provided in a form that cannot be extracted by the foreign user via anti-tamper provisions built into the system. The content of these items is classified Secret. The RFI is a passive radar detections and direction finding system, which utilizes a detachable User Data Module (UDM) on the RFI processor, which contains the RF threat library. The UDM, which is a hardware assemblage, is classified Confidential when programmed with threat parameters, threat priorities and/or techniques derived from U.S. intelligence information.

b. The Modernized Target Acquisition and Designation Sight/Modernized Pilot Night Vision Sensor (MTADS/MPNVS) provides day, night and limited adverse weather target information, as well as night navigation capabilities. The MPNVS provides infrared imaging that permits safer nap-of-the-earth flight to, from and within the battle area, while MTADS provides the co-pilot gunner with improved search, detection, recognition and designation by means of Direct View Optics (DVO), television, Forward Looking Infrared (FLIR) sighting systems that may be used singularly or in combinations. The Hardware and releasable technical manuals for operations and maintenance are Unclassified.

c. The AAR-57(V) 3/5 Common Missile Warning System (CMWS) detects energy emitted by threat missiles in-flight, evaluates potential false alarm emitters in the environment, declares validity of threat and selects appropriate countermeasures. The CMWS consists of an Electronic Control Unit ECU, Electro-Optic Missile Sensors, Sequencer, and Improved Countermeasures Dispenser (ICMD). The ECU hardware is classified Confidential and releasable technical manuals for operation and maintenance are classified Secret.

d. The AN/APR-39 Radar Signal Detecting Set is a system that provides warning of a radar directed air defense threat to allow appropriate countermeasures. This is the 1553 data bus compatible configuration. Hardware is classified Confidential when programmed with U.S. threat data; releasable technical manuals for operation and maintenance are classified Confidential; releasable technical data for performance is classified Secret.

e. The AN/AVR-2B Laser Warning Set is a passive laser warning system that receives, processes and displays threat information resulting from aircraft illumination by lasers on the multi-functional display. The hardware is classified Confidential and releasable technical manuals for operation and maintenance are classified Secret.

f. The AN/ALQ-136A(V)5, Radar jammer-Is an automatic radar jammer that analyzes various incoming radar signals. When threat signals are identified and verified, jamming automatically begins and continues until the threat radar breaks lock. The hardware is classified Confidential; releasable technical manuals for operation and maintenance are classified Secret; releasable technical data for performance is classified Secret.

g. Improved Helmet Display Sight System (IHDSS) is an enhanced version of its predecessor. It will provide improved operation al performance primarily in resolution allowing greater utilization of the MTADS/MPNVS performance enhancements. The hardware and releasable technical manuals are Unclassified.

h. The highest level for release of the AGM-114R1 HELLFIRE SAL is Secret, based upon the software. The highest level of classified information that could be disclosed by a proposed sale or by testing of the end item is Secret; the highest level that must be disclosed for production, maintenance, or training is Confidential. Reverse engineering could reveal Confidential information. Vulnerability data, countermeasures, vulnerability/susceptibility analyses, and threat definitions are classified Secret or Confidential.

i. The STINGER Block I 92H Anti-Aircraft missile is a fire-and-forget infrared missile system that can be fired from a number of ground-to-air and rotary wing platforms. The missile homes in on the heat emitted by either jet or propeller-driven, fixed wing aircraft or helicopters. The STINGER system employs a proportional navigation system that allows it to fly an intercept course to the target. The STINGER Block I International Missile System, hardware, software and documentation contain sensitive technology and are classified Confidential. The guidance section of the missile and tracking head trainer contain highly sensitive technology and are classified Confidential.

j. The AN/ARC-201E export variant Single Channel Ground and Airborne Radio System (SINCGARS) is a tactical FM airborne radio subsystem that provides secure, anti-jam voice and data communication. The Enhanced Data Modes (EDM) of the radio employs a Reed-Solomon Forward Error Correction (FEC) technique that provides enhanced bit-error-rate performance. The EDM Packet Data Supports packet data transfer from the airborne host computer to another airborne platform or the ground-based equivalent SINCGARS system.

k. The AN/ARC-231 is an airborne Very High Frequency/Ultra High Frequency (VHF/UHF) Line of Sight (LOS) and Demand Assigned Multiple Access (DAMA) Satellite Communication System (SATCOM). The ARC-231 provides airborne, multi-band, multi-mission, secure anti-jam voice, data and imagery network capable communication sin a compact radio set.

l. The AN/ARC-220 is an easy to operate, multifunctional, fully Digital Signal processing (DSP) high frequency radio for rotary wing applications. Its Embedded Automatic Link Establishment (ALE) offers the best clear channel connection. The radio contains Embedded Electronic Counter-Countermeasures (ECCM), Automatic Quick Call ALE (AQC-ALE), Securable Automatic Position Reporting (V)3/(V)4, and Securable Binary Messaging with ARQ protocol, (V)3/(V)4.

m. The AN/APX-123 transponder incorporates all of the advanced features required in today's global military air traffic control environments. The AN/APX-123 transponder contains NSA-certified M4/M5 crypto and meets all U.S. and NATO mode 5 requirements. The transponder's open-system architecture design and high-density field programmable gate array technology ensures ongoing versatility and future utility through software upgrade only, without the risk and cost associated with hardware modifications.

2. If a technologically advanced adversary were to obtain knowledge of the specific hardware and software elements, the information could be used to create countermeasures which might reduce weapons system effectiveness or be used in the development of a system with similar or advanced capabilities.

[FR Doc. 2012–24315 Filed 10–2–12; 8:45 am]
BILLING CODE 5001–06–C

DEPARTMENT OF DEFENSE

Office of the Secretary

Defense Science Board; Notice of Advisory Committee Meetings

AGENCY: Department of Defense.

ACTION: Notice of Advisory Committee Meetings.

SUMMARY: The Defense Science Board will meet in closed session on October 24–25, 2012, from 8 a.m. to 5 p.m. at the Pentagon, Rooms 3A912A and 3E863, Washington, DC.

DATES: October 24–25, 2012; 8 a.m. to 5 p.m.

ADDRESSES: The Pentagon, Rooms 3A912A and 3E863, Washington, DC.

FOR FURTHER INFORMATION CONTACT: Ms. Debra Rose, Executive Officer, Defense Science Board, 3140 Defense Pentagon, Room 3B888A, Washington, DC 20301–3140, via email at *debra.rose@osd.mil,* or via phone at (703) 571–0084.

SUPPLEMENTARY INFORMATION: The mission of the Defense Science Board is to advise the Secretary of Defense and the Under Secretary of Defense for Acquisition, Technology & Logistics on scientific and technical matters as they affect the perceived needs of the Department of Defense. At this meeting, the Board will discuss interim finding and recommendations resulting from ongoing Task Force activities. The Board will also discuss plans for future consideration of scientific and technical aspects of specific strategies, tactics, and policies as they may affect the U. S. national defense posture and homeland security.

In accordance with section 10(d) of the Federal Advisory Committee Act, Public Law 92–463, as amended (5 U.S.C. App. 2) and 41 CFR 102–3.155, the Department of Defense has determined that these Defense Science Board Quarterly meeting will be closed to the public. Specifically, the Under Secretary of Defense (Acquisition, Technology and Logistics), with the coordination of the DoD Office of General Counsel, has determined in writing that all sessions of these meetings will be closed to the public because they will be concerned throughout with matters listed in 5 U.S.C. 552b(c)(1) and (4).

Interested persons may submit a written statement for consideration by the Defense Science Board. Individuals submitting a written statement must submit their statement to the Designated Federal Official at the address detailed in **FOR FURTHER INFORMATION CONTACT**, at any point, however, if a written statement is not received at least 10 calendar days prior to the meeting, which is the subject of this notice, then it may not be provided to or considered by the Defense Science Board. The Designated Federal Official will review all timely submissions with the Defense Science Board Chairperson, and ensure they are provided to members of the Defense Science Board before the meeting that is the subject of this notice.

Dated: September 27, 2012.

Morgan F. Park,

Alternate OSD Federal Register Liaison Officer, Department of Defense.

[FR Doc. 2012–24306 Filed 10–2–12; 8:45 am]

BILLING CODE 5001–06–P

DEPARTMENT OF DEFENSE

Office of the Secretary

[Docket ID DOD–2012–OS–0119]

Privacy Act of 1974; System of Records

AGENCY: Office of the Secretary, DoD.

ACTION: Notice to delete a system of records.

SUMMARY: The Office of the Secretary of Defense is deleting a system of records notice from its existing inventory of record systems subject to the Privacy Act of 1974, (5 U.S.C. 552a(r)), as amended.

DATES: This proposed action will be effective on November 5, 2012 unless comments are received which result in a contrary determination. Comments will be accepted on or before November 2, 2012.

ADDRESSES: You may submit comments, identified by docket number and title, by any of the following methods:

• *Federal Rulemaking Portal: http://www.regulations.gov.*

Follow the instructions for submitting comments.

• *Mail:* Federal Docket Management System Office, 4800 Mark Center Drive, East Tower, 2nd Floor, Suite 02G09, Alexandria, VA 22350–3100.

Instructions: All submissions received must include the agency name and docket number for this **Federal Register** document. The general policy for comments and other submissions from members of the public is to make these submissions available for public viewing on the Internet at *http://www.regulations.gov* as they are received without change, including any personal identifiers or contact information.

FOR FURTHER INFORMATION CONTACT: Mrs. Cindy Allard, Privacy Act Officer, Office of Freedom of Information, Washington Headquarters Services, 1155 Defense Pentagon, Washington, DC 20301–1155, or by telephone at (571) 372–0461.

SUPPLEMENTARY INFORMATION: The Office of the Secretary of Defense systems of records notices subject to the Privacy Act of 1974, (5 U.S.C. 552a), as amended, have been published in the **Federal Register** and are available from the address in **FOR FURTHER INFORMATION CONTACT**. The Department of Defense proposes to delete a systems of records notice from its inventory of record systems subject to the Privacy Act of 1974 (5 U.S.C. 552a), as amended. The proposed deletion is not within the purview of subsection (r) of the Privacy Act of 1974, (5 U.S.C. 552a), as amended, which requires the submission of a new or altered system report.

Dated: September 26, 2012.

Morgan F. Park,

Alternate OSD Federal Register Liaison Officer, Department of Defense.

DELETION:

DUSDP 02

Special Personnel Security Cases, (February 22, 1993, 58 FR 10227).

REASON:

Based on a review of DUSDP 02, Special Personnel Security Cases, it has been determined the system has never been used; therefore, it has never held records and can be deleted.

[FR Doc. 2012–24301 Filed 10–2–12; 8:45 am]

BILLING CODE 5001–06–P

DEPARTMENT OF DEFENSE

Office of the Secretary

[Docket ID: DOD–2012–OS–0121]

Privacy Act of 1974; System of Records

AGENCY: Defense Finance and Accounting Service.

ACTION: Notice to delete two systems of records.

SUMMARY: The Defense Finance and Accounting Service is deleting two systems of records notices in its existing inventory of record systems subject to the Privacy Act of 1974, (5 U.S.C. 552a), as amended.

DATES: This proposed action will be effective on November 5, 2012 unless comments are received which result in a contrary determination. Comments will be accepted on or before November 2, 2012.

ADDRESSES: You may submit comments, identified by docket number and title, by any of the following methods:

• Federal Rulemaking Portal: *http://www.regulations.gov.* Follow the instructions for submitting comments.

• Mail: Federal Docket Management System Office, 4800 Mark Center Drive, East Tower, 2nd Floor, Suite 02G09, Alexandria, VA 22350–3100.

Instructions: All submissions received must include the agency name and docket number for this **Federal Register** document. The general policy for comments and other submissions from members of the public is to make these submissions available for public viewing on the Internet at *http://www.regulations.gov* as they are received without change, including any personal identifiers or contact information.

FOR FURTHER INFORMATION CONTACT: Mr. Gregory Outlaw, (317) 510–4591.

SUPPLEMENTARY INFORMATION: The Defense Finance and Accounting Service systems of records notices subject to the Privacy Act of 1974, (5 U.S.C. 552a), as amended, have been published in the **Federal Register** and are available from the address in **FOR FURTHER INFORMATION CONTACT**. The proposed deletions are not within the purview of subsection (r) of the Privacy Act of 1974, (5 U.S.C. 552a), as amended, which requires the submission of a new or altered system report.

Dated: September 27, 2012.

Morgan F. Park,

Alternate OSD **Federal Register** *Liaison Officer, Department of Defense.*

DELETIONS:

T7320a

SYSTEM NAME:

Centralized Finance & Accounting Support Systems (CFASS) (August 13, 2007, 72 FR 45233).

REASON:

CFASS functionality was migrated to the Automated Disbursing System (ADS) (August 15, 2007, 72 FR 46041), all supporting data, programs and reports were migrated to ADS.

T7904

SYSTEM NAME:

Standard Industrial Fund System (SIFS) (August 13, 2007, 72 FR 45234).

REASON:

System was replaced by the Automated Disbursing System (ADS) (August 15, 2007, 72 FR 46041); all SIFS electronic records were deleted while other records were destroyed by degaussing, burning or shredding in accordance with the National Archives Records Administration retention schedule.

[FR Doc. 2012–24342 Filed 10–2–12; 8:45 am]

BILLING CODE 5001–06–P

DEPARTMENT OF DEFENSE

Office of the Secretary

[Docket ID DOD–2012–OS–0120]

Privacy Act of 1974; Systems of Records

AGENCY: National Security Agency/Central Security Service, DoD.

ACTION: Notice to amend a system of records.

SUMMARY: The National Security Agency (NSA) is proposing to amend a system of records notice in its existing inventory of records systems subject to the Privacy Act of 1974 (5 U.S.C. 552a), as amended.

DATES: This proposed action will be effective on November 5, 2012 unless comments are received which result in a contrary determination. Comments will be accepted on or before November 2, 2012.

ADDRESSES: You may submit comments, identified by docket number and title, by any of the following methods:

- *Federal Rulemaking Portal: http://www.regulations.gov.* Follow the instructions for submitting comments.
- *Mail:* Federal Docket Management System Office, 4800 Mark Center Drive, East Tower, 2nd Floor, Suite 02G09, Alexandria, VA 22350–3100.

Instructions: All submissions received must include the agency name and docket number for this **Federal Register** document. The general policy for comments and other submissions from members of the public is to make these submissions available for public viewing on the Internet at *http://www.regulations.gov* as they are received without change, including any personal identifiers or contact information.

FOR FURTHER INFORMATION CONTACT: Ms. Kris Grein, National Security Agency/Central Security Service (NSA/CSS), Freedom of Information Act and Privacy Act Office, 9800 Savage Road, Suite 6248, Ft. George G. Meade, MD 20755–6248, or by phone at (301) 688–6527.

SUPPLEMENTARY INFORMATION: The National Security Agency/Central Security System systems of records notices subject to the Privacy Act of 1974 (5 U.S.C. 552a), as amended, have been published in the **Federal Register** and are available from the address above.

The specific changes to the records system being amended are set forth below. The proposed amendment is not within the purview of subsection (r) of the Privacy Act of 1974 (5 U.S.C. 552a), as amended, which requires the submission of a new or altered system report.

Dated: September 26, 2012.

Morgan F. Park,

Alternate OSD Federal Register Liaison Officer, Department of Defense.

GNSA 08

SYSTEM NAME:

NSA/CSS Payroll Processing File (June 8, 2009, 74 FR 27114)

CHANGES:

* * * * *

SYSTEM LOCATION:

Delete entry and replace with ''Primary location: National Security Agency/Central Security Service, Ft. George G. Meade, MD 20755–6000.

DECENTRALIZED SEGMENTS:

Defense Intelligence Agency (DIA) Headquarters and DIA field elements, DoD activities supported by DIA, and National Security Agency (NSA) field elements as authorized and appropriate.

For official mailing addresses for any of the decentralized system locations, write to the National Security Agency/Central Security Service, 9800 Savage Road, Suite 6248, Ft. George G. Meade, MD 20755–6248.''

* * * * *

AUTHORITY FOR MAINTENANCE OF THE SYSTEM:

Delete entry and replace with ''Section 6 of the National Security Agency Act of 1959, Public Law 86–36 (50 U.S.C. 402 note); Title 5, Part III, of the United States Code (Employees); Title 31, Chapter 35, of the United States Code (Accounting and Collection); Title 5, Chapter 1, of the United States Code of Federal Regulations (Office of Personnel Management) and E.O. 9397 (SSN), as amended.''

* * * * *

SAFEGUARDS:

Delete entry and replace with ''Access to facilities is limited to security-cleared personnel and escorted visitors only. Within the facilities themselves, access to paper and computer printouts are controlled by limited-access and lockable containers. Access to electronic means is limited and controlled by computer password protection.''

* * * * *

SYSTEM MANAGER(S) AND ADDRESS:

Delete entry and replace with ''Chief, Payroll Division, National Security Agency/Central Security Service, Suite 6855, Ft. George G. Meade, MD 20755–6855.''

NOTIFICATION PROCEDURE:

Delete entry and replace with ''Individuals seeking to determine whether information about themselves is contained in this system should address written inquiries to the National Security Agency/Central Security Service, Freedom of Information Act/Privacy Act Office, 9800 Savage Road, Suite 6248, Ft. George G. Meade, MD 20755–6248.

Written inquiries should contain the individual's full name, SSN, mailing address, telephone number and signature.''

RECORD ACCESS PROCEDURES:

Delete entry and replace with ''Individuals seeking access to information about themselves contained in this system should address written inquiries to the National Security Agency/Central Security Service, Freedom of Information Act/Privacy Act Office, 9800 Savage Road, Suite 6248, Ft. George G. Meade, MD 20755–6248.

Written inquiries should contain the individual's full name, SSN, mailing address, telephone number and signature.''

CONTESTING RECORD PROCEDURES:

Delete entry and replace with ''The NSA/CSS rules for contesting contents and appealing initial determinations are published at 32 CFR part 322 or may be obtained by written request addressed to the National Security Agency/Central Security Service, Freedom of Information Act/Privacy Office, 9800 Savage Road, Suite 6248, Ft. George G. Meade, MD 20755–6248.''

* * * * *

[FR Doc. 2012–24302 Filed 10–2–12; 8:45 am]

BILLING CODE 5001–06–P

DEPARTMENT OF DEFENSE

Office of the Secretary

Revised Non-Foreign Overseas Per Diem Rates

AGENCY: Per Diem, Travel and Transportation Allowance Committee, DoD.

ACTION: Notice of revised non-foreign overseas per diem rates.

SUMMARY: The Per Diem, Travel and Transportation Allowance Committee is publishing Civilian Personnel Per Diem Bulletin Number 286. This bulletin lists revisions in the per diem rates prescribed for U.S. Government employees for official travel in Alaska, Hawaii, Puerto Rico, the Northern Mariana Islands and Possessions of the United States. AEA changes announced

in Bulletin Number 194 remain in effect. Bulletin Number 286 is being published in the **Federal Register** to assure that travelers are paid per diem at the most current rates.

DATES: *Effective Date:* October 1, 2012.

FOR FURTHER INFORMATION CONTACT: Mrs. Sonia Malik, 571–372–1276.

SUPPLEMENTARY INFORMATION: This document gives notice of revisions in per diem rates prescribed by the Per Diem Travel and Transportation Allowance Committee for non-foreign areas outside the continental United States. It supersedes Civilian Personnel Per Diem Bulletin Number 285. Distribution of Civilian Personnel Per Diem Bulletins by mail was discontinued. Per Diem Bulletins published periodically in the **Federal Register** now constitute the only notification of revisions in per diem rates to agencies and establishments outside the Department of Defense. For more information or questions about per diem rates, please contact your local travel office. The text of the Bulletin follows: The changes in Civilian Bulletin 286 are updated rates for Puerto Rico.

Dated: September 26, 2012.

Morgan F. Park,

Alternate OSD Federal Register Liaison Officer, Department of Defense.

BILLING CODE 5001–06–P

Maximum Per Diem Rates for official travel in Alaska, Hawaii, the Commonwealths of Puerto Rico and the Northern Islands and Possessions of the United States by Federal Government civilian employees.

LOCALITY	MAXIMUM LODGING AMOUNT (A)	+	MEALS AND INCIDENTALS RATE (B)	=	MAXIMUM PER DIEM RATE (C)	EFFECTIVE DATE
ALASKA						
[OTHER]						
01/01 - 12/31	110		105		215	2/1/2012
ADAK						
01/01 - 12/31	120		79		199	7/1/2003
ANCHORAGE [INCL NAV RES]						
05/16 - 09/30	181		104		285	2/1/2012
10/01 - 05/15	99		96		195	2/1/2012
BARROW						
01/01 - 12/31	159		95		254	10/1/2002
BETHEL						
01/01 - 12/31	157		99		256	7/1/2011
BETTLES						
01/01 - 12/31	135		62		197	10/1/2004
CLEAR AB						
01/01 - 12/31	90		82		172	10/1/2006
COLDFOOT						
01/01 - 12/31	165		70		235	10/1/2006
COPPER CENTER						
09/16 - 05/14	99		95		194	2/1/2012
05/15 - 09/15	149		99		248	2/1/2012
CORDOVA						
01/01 - 12/31	95		109		204	2/1/2012
CRAIG						
10/01 - 04/30	99		78		177	11/1/2011
05/01 - 09/30	129		81		210	11/1/2011
DEADHORSE						
01/01 - 12/31	170		68		238	8/1/2012
DELTA JUNCTION						
01/01 - 12/31	129		62		191	2/1/2012
DENALI NATIONAL PARK						

LOCALITY	MAXIMUM LODGING AMOUNT (A)	+	MEALS AND INCIDENTALS RATE (B)	=	MAXIMUM PER DIEM RATE (C)	EFFECTIVE DATE
05/01 - 09/30	159		101		260	2/1/2012
10/01 - 04/30	89		94		183	2/1/2012
DILLINGHAM						
05/15 - 10/15	185		111		296	1/1/2011
10/16 - 05/14	169		109		278	1/1/2011
DUTCH HARBOR-UNALASKA						
01/01 - 12/31	121		102		223	2/1/2012
EARECKSON AIR STATION						
01/01 - 12/31	90		77		167	6/1/2007
EIELSON AFB						
09/16 - 05/14	75		92		167	2/1/2012
05/15 - 09/15	175		102		277	2/1/2012
ELFIN COVE						
01/01 - 12/31	175		46		221	2/1/2012
ELMENDORF AFB						
05/16 - 09/30	181		104		285	2/1/2012
10/01 - 05/15	99		96		195	2/1/2012
FAIRBANKS						
05/15 - 09/15	175		102		277	2/1/2012
09/16 - 05/14	75		92		167	2/1/2012
FOOTLOOSE						
01/01 - 12/31	175		18		193	10/1/2002
FT. GREELY						
01/01 - 12/31	129		62		191	2/1/2012
FT. RICHARDSON						
05/16 - 09/30	181		104		285	2/1/2012
10/01 - 05/15	99		96		195	2/1/2012
FT. WAINWRIGHT						
05/15 - 09/15	175		102		277	2/1/2012
09/16 - 05/14	75		92		167	2/1/2012
GAMBELL						
01/01 - 12/31	105		39		144	1/1/2011
GLENNALLEN						
05/15 - 09/15	149		99		248	2/1/2012

LOCALITY		MAXIMUM LODGING AMOUNT (A)	+	MEALS AND INCIDENTALS RATE (B)	=	MAXIMUM PER DIEM RATE (C)	EFFECTIVE DATE
09/16	- 05/14	99		95		194	2/1/2012
HAINES							
01/01	- 12/31	107		101		208	1/1/2011
HEALY							
05/01	- 09/30	159		101		260	2/1/2012
10/01	- 04/30	89		94		183	2/1/2012
HOMER							
09/16	- 05/04	79		108		187	2/1/2012
05/05	- 09/15	167		117		284	2/1/2012
JUNEAU							
05/16	- 09/15	149		104		253	2/1/2012
09/16	- 05/15	135		103		238	2/1/2012
KAKTOVIK							
01/01	- 12/31	165		86		251	10/1/2002
KAVIK CAMP							
01/01	- 12/31	150		69		219	10/1/2002
KENAI-SOLDOTNA							
05/01	- 08/31	179		102		281	2/1/2012
09/01	- 04/30	79		92		171	2/1/2012
KENNICOTT							
01/01	- 12/31	175		111		286	2/1/2012
KETCHIKAN							
05/01	- 09/30	140		97		237	2/1/2012
10/01	- 04/30	99		94		193	2/1/2012
KING SALMON							
05/01	- 10/01	225		91		316	10/1/2002
10/02	- 04/30	125		81		206	10/1/2002
KLAWOCK							
05/01	- 09/30	129		81		210	11/1/2011
10/01	- 04/30	99		78		177	11/1/2011
KODIAK							
05/01	- 09/30	152		93		245	2/1/2012
10/01	- 04/30	100		88		188	2/1/2012
KOTZEBUE							

LOCALITY		MAXIMUM LODGING AMOUNT (A)	+	MEALS AND INCIDENTALS RATE (B)	=	MAXIMUM PER DIEM RATE (C)	EFFECTIVE DATE
01/01	- 12/31	219		115		334	2/1/2012
KULIS AGS							
10/01	- 05/15	99		96		195	2/1/2012
05/16	- 09/30	181		104		285	2/1/2012
MCCARTHY							
01/01	- 12/31	175		111		286	2/1/2012
MCGRATH							
01/01	- 12/31	165		69		234	10/1/2006
MURPHY DOME							
05/15	- 09/15	175		102		277	2/1/2012
09/16	- 05/14	75		92		167	2/1/2012
NOME							
01/01	- 12/31	140		132		272	2/1/2012
NUIQSUT							
01/01	- 12/31	180		53		233	10/1/2002
PETERSBURG							
01/01	- 12/31	110		105		215	2/1/2012
POINT HOPE							
01/01	- 12/31	200		49		249	1/1/2011
POINT LAY							
01/01	- 12/31	225		51		276	8/1/2011
PORT ALEXANDER							
01/01	- 12/31	150		43		193	8/1/2010
PORT ALSWORTH							
01/01	- 12/31	135		88		223	10/1/2002
PRUDHOE BAY							
01/01	- 12/31	170		68		238	1/1/2011
SELDOVIA							
05/05	- 09/15	167		117		284	2/1/2012
09/16	- 05/04	79		108		187	2/1/2012
SEWARD							
05/01	- 10/15	172		103		275	2/1/2012
10/16	- 04/30	85		95		180	2/1/2012
SITKA-MT. EDGECUMBE							

LOCALITY		MAXIMUM LODGING AMOUNT (A)	+	MEALS AND INCIDENTALS RATE (B)	=	MAXIMUM PER DIEM RATE (C)	EFFECTIVE DATE
10/01	- 04/30	99		90		189	2/1/2012
05/01	- 09/30	119		92		211	2/1/2012
SKAGWAY							
10/01	- 04/30	99		94		193	2/1/2012
05/01	- 09/30	140		97		237	2/1/2012
SLANA							
05/01	- 09/30	139		55		194	2/1/2005
10/01	- 04/30	99		55		154	2/1/2005
SPRUCE CAPE							
05/01	- 09/30	152		93		245	2/1/2012
10/01	- 04/30	100		88		188	2/1/2012
ST. GEORGE							
01/01	- 12/31	129		55		184	6/1/2004
TALKEETNA							
01/01	- 12/31	100		89		189	10/1/2002
TANANA							
01/01	- 12/31	140		132		272	2/1/2012
TOK							
05/15	- 09/30	95		89		184	2/1/2012
10/01	- 05/14	85		88		173	2/1/2012
UMIAT							
01/01	- 12/31	350		64		414	2/1/2012
VALDEZ							
05/16	- 09/14	159		89		248	2/1/2012
09/15	- 05/15	119		85		204	2/1/2012
WAINWRIGHT							
01/01	- 12/31	175		83		258	1/1/2011
WASILLA							
05/01	- 09/30	153		90		243	2/1/2012
10/01	- 04/30	89		84		173	2/1/2012
WRANGELL							
10/01	- 04/30	99		94		193	2/1/2012
05/01	- 09/30	140		97		237	2/1/2012
YAKUTAT							

LOCALITY	MAXIMUM LODGING AMOUNT (A)	+	MEALS AND INCIDENTALS RATE (B)	=	MAXIMUM PER DIEM RATE (C)	EFFECTIVE DATE
01/01 - 12/31	105		94		199	1/1/2011
AMERICAN SAMOA						
AMERICAN SAMOA						
01/01 - 12/31	139		96		235	9/1/2012
GUAM						
GUAM (INCL ALL MIL INSTAL)						
01/01 - 12/31	159		96		255	7/1/2012
HAWAII						
[OTHER]						
07/01 - 08/21	114		118		232	5/1/2012
08/22 - 06/30	104		117		221	5/1/2012
CAMP H M SMITH						
01/01 - 12/31	177		126		303	5/1/2012
EASTPAC NAVAL COMP TELE AREA						
01/01 - 12/31	177		126		303	5/1/2012
FT. DERUSSEY						
01/01 - 12/31	177		126		303	5/1/2012
FT. SHAFTER						
01/01 - 12/31	177		126		303	5/1/2012
HICKAM AFB						
01/01 - 12/31	177		126		303	5/1/2012
HONOLULU						
01/01 - 12/31	177		126		303	5/1/2012
ISLE OF HAWAII: HILO						
07/01 - 08/21	114		118		232	5/1/2012
08/22 - 06/30	104		117		221	5/1/2012
ISLE OF HAWAII: OTHER						
01/01 - 12/31	180		129		309	5/1/2012
ISLE OF KAUAI						
01/01 - 12/31	243		131		374	5/1/2012
ISLE OF MAUI						
01/01 - 12/31	209		137		346	5/1/2012
ISLE OF OAHU						

LOCALITY	MAXIMUM LODGING AMOUNT (A)	+	MEALS AND INCIDENTALS RATE (B)	=	MAXIMUM PER DIEM RATE (C)	EFFECTIVE DATE
01/01 - 12/31	177		126		303	5/1/2012
KEKAHA PACIFIC MISSILE RANGE FAC						
01/01 - 12/31	243		131		374	5/1/2012
KILAUEA MILITARY CAMP						
07/01 - 08/21	114		118		232	5/1/2012
08/22 - 06/30	104		117		221	5/1/2012
LANAI						
01/01 - 12/31	249		155		404	5/1/2012
LUALUALEI NAVAL MAGAZINE						
01/01 - 12/31	177		126		303	5/1/2012
MCB HAWAII						
01/01 - 12/31	177		126		303	5/1/2012
MOLOKAI						
01/01 - 12/31	131		89		220	5/1/2012
NAS BARBERS POINT						
01/01 - 12/31	177		126		303	5/1/2012
PEARL HARBOR						
01/01 - 12/31	177		126		303	5/1/2012
SCHOFIELD BARRACKS						
01/01 - 12/31	177		126		303	5/1/2012
WHEELER ARMY AIRFIELD						
01/01 - 12/31	177		126		303	5/1/2012
MIDWAY ISLANDS						
MIDWAY ISLANDS						
01/01 - 12/31	125		68		193	5/1/2012
NORTHERN MARIANA ISLANDS						
[OTHER]						
01/01 - 12/31	85		76		161	7/1/2012
ROTA						
01/01 - 12/31	130		106		236	7/1/2012
SAIPAN						
01/01 - 12/31	140		87		227	7/1/2012
TINIAN						

LOCALITY	MAXIMUM LODGING AMOUNT (A)	+	MEALS AND INCIDENTALS RATE (B)	=	MAXIMUM PER DIEM RATE (C)	EFFECTIVE DATE
01/01 - 12/31	85		76		161	7/1/2012
PUERTO RICO						
[OTHER]						
01/01 - 12/31	109		112		221	6/1/2012
AGUADILLA						
01/01 - 12/31	124		76		200	10/1/2012
BAYAMON						
01/01 - 12/31	195		128		323	9/1/2010
CAROLINA						
01/01 - 12/31	195		128		323	9/1/2010
CEIBA						
01/01 - 12/31	139		92		231	10/1/2012
CULEBRA						
01/01 - 12/31	150		98		248	3/1/2012
FAJARDO [INCL ROOSEVELT RDS NAVSTAT]						
01/01 - 12/31	139		92		231	10/1/2012
FT. BUCHANAN [INCL GSA SVC CTR, GUAYNABO]						
01/01 - 12/31	195		128		323	9/1/2010
HUMACAO						
01/01 - 12/31	139		92		231	10/1/2012
LUIS MUNOZ MARIN IAP AGS						
01/01 - 12/31	195		128		323	9/1/2010
LUQUILLO						
01/01 - 12/31	139		92		231	10/1/2012
MAYAGUEZ						
01/01 - 12/31	109		112		221	9/1/2010
PONCE						
01/01 - 12/31	149		89		238	9/1/2012
RIO GRANDE						
01/01 - 12/31	169		123		292	6/1/2012
SABANA SECA [INCL ALL MILITARY]						
01/01 - 12/31	195		128		323	9/1/2010
SAN JUAN & NAV RES STA						

LOCALITY	MAXIMUM LODGING AMOUNT (A)	+	MEALS AND INCIDENTALS RATE (B)	=	MAXIMUM PER DIEM RATE (C)	EFFECTIVE DATE
01/01 - 12/31	195		128		323	9/1/2010
VIEQUES						
01/01 - 12/31	175		95		270	3/1/2012
VIRGIN ISLANDS (U.S.)						
ST. CROIX						
04/15 - 12/14	135		92		227	5/1/2006
12/15 - 04/14	187		97		284	5/1/2006
ST. JOHN						
04/15 - 12/14	163		98		261	5/1/2006
12/15 - 04/14	220		104		324	5/1/2006
ST. THOMAS						
04/15 - 12/14	240		105		345	5/1/2006
12/15 - 04/14	299		111		410	5/1/2006
WAKE ISLAND						
WAKE ISLAND						
01/01 - 12/31	173		42		215	9/1/2012

[FR Doc. 2012–24323 Filed 10–2–12; 8:45 am]
BILLING CODE 5001–06–C

DEPARTMENT OF DEFENSE

Department of the Air Force

[Docket ID USAF–2012–0019]

Privacy Act of 1974; System of Records

AGENCY: Department of the Air Force, DoD.

ACTION: Notice to delete a system of records.

SUMMARY: The Department of the Air Force is deleting a system of records notice in its existing inventory of record systems subject to the Privacy Act of 1974 (5 U.S.C. 552a), as amended.

DATES: This proposed action will be effective on November 5, 2012 unless comments are received which result in a contrary determination. Comments will be accepted on or before November 2, 2012.

ADDRESSES: You may submit comments, identified by docket number and title, by any of the following methods:

- *Federal Rulemaking Portal: http://www.regulations.gov.*

Follow the instructions for submitting comments.

- *Mail:* Federal Docket Management System Office, 4800 Mark Center Drive, East Tower, 2nd Floor, Suite 02G09, Alexandria, VA 22350–3100.

Instructions: All submissions received must include the agency name and docket number for this **Federal Register** document. The general policy for comments and other submissions from members of the public is to make these submissions available for public viewing on the Internet at *http://www.regulations.gov* as they are received without change, including any personal identifiers or contact information.

FOR FURTHER INFORMATION CONTACT: Mr. Charles J. Shedrick, Department of the Air Force Privacy Office, Air Force Privacy Act Office, Office of Warfighting Integration and Chief Information officer, ATTN: SAF/XCPPI, 1800 Air Force Pentagon, Washington, DC 20330–1800 or at 202–404–6575.

SUPPLEMENTARY INFORMATION: The Department of the Air Force systems of records notices subject to the Privacy Act of 1974 (5 U.S.C. 552a), as amended, have been published in the **Federal Register** and are available from the address in **FOR FURTHER INFORMATION CONTACT**. The Department of the Air Force proposes to delete a systems of records notice from its inventory of record systems subject to the Privacy Act of 1974 (5 U.S.C. 552a), as amended. The proposed deletion is not within the purview of subsection (r) of the Privacy Act of 1974 (5 U.S.C. 552a), as amended, which requires the submission of a new or altered system report.

Dated: September 26, 2012.

Morgan F. Park,

Alternate OSD Federal Register Liaison Officer, Department of Defense.

DELETION:

F036 AF PC N

SYSTEM NAME:

Unit Assigned Personnel Information (January 18, 2002, 67 FR 2642).

REASON:

Unit Personnel Records are no longer maintained in paper by each Installation Military Personnel Section (MPS).

As of June 2008, paper records were converted to electronic Unit Personnel Records and maintained in the Automated Records Management System (ARMS) which is covered by SORN F036 AF PC C. Therefore, SORN AF PC N, Unit Assigned Personnel

Information (January 18, 2002, 67 FR 2642) can be deleted.

[FR Doc. 2012–24305 Filed 10–2–12; 8:45 am]

BILLING CODE 5001–06–P

DEPARTMENT OF DEFENSE

Department of the Army

[Docket ID USA–2012–0012]

Privacy Act of 1974; System of Records

AGENCY: Department of the Army, DoD.

ACTION: Notice to delete a System of Records.

SUMMARY: The Department of the Army is deleting a system of records notice in its existing inventory of record systems subject to the Privacy Act of 1974, (5 U.S.C. 552a), as amended.

DATES: This proposed action will be effective on November 5, 2012 unless comments are received which result in a contrary determination. Comments will be accepted on or before November 2, 2012.

ADDRESSES: You may submit comments, identified by docket number and title, by any of the following methods:

- *Federal Rulemaking Portal: http://www.regulations.gov*. Follow the instructions for submitting comments.
- *Mail:* Federal Docket Management System Office, 4800 Mark Center Drive, East Tower, 2nd Floor, Suite 02G09, Alexandria, VA 22350–3100.

Instructions: All submissions received must include the agency name and docket number for this **Federal Register** document. The general policy for comments and other submissions from members of the public is to make these submissions available for public viewing on the Internet at *http://www.regulations.gov* as they are received without change, including any personal identifiers or contact information.

FOR FURTHER INFORMATION CONTACT: Mr. Leroy Jones, Jr., Department of the Army, Privacy Office, U.S. Army Records Management and Declassification Agency, 7701 Telegraph Road, Casey Building, Suite 144, Alexandria, VA 22315–3827 or by phone at 703–428–6185.

SUPPLEMENTARY INFORMATION: The Department of the Army systems of records notices subject to the Privacy Act of 1974, (5 U.S.C. 552a), as amended, have been published in the **Federal Register** and are available from the address in **FOR FURTHER INFORMATION CONTACT**. The Department of the Army proposes to delete a systems of records notice from its inventory of record systems subject to the Privacy Act of 1974 (5 U.S.C. 552a), as amended. The proposed deletion is not within the purview of subsection (r) of the Privacy Act of 1974, (5 U.S.C. 552a), as amended, which requires the submission of a new or altered system report.

Dated: September 26, 2012.

Morgan F. Park,

Alternate OSD Federal Register Liaison Officer, Department of Defense.

Deletion:

A0351 AMC

STUDENT/FACULTY RECORDS:

AMC Schools Systems (February 2, 1996, 61 FR 3916).

REASON:

The Student/Faculty Records are no longer collected at the Army Material Command (AMC). These records have been transferred to the National Personnel Records Center and are now covered by OPM/GOVT–1, General Personnel Records. Therefore, this notice can be deleted.

[FR Doc. 2012–24333 Filed 10–2–12; 8:45 am]

BILLING CODE 5001–06–P

DEPARTMENT OF EDUCATION

Notice of Proposed Information Collection Requests; Federal Student Aid; Student Assistance General Provisions Annual Fire Safety Report

SUMMARY: This notice solicits comments with respect to the administrative requirements of the annual fire safety report as required by the Higher Education Opportunity Act and the Department of Education's regulations at 34 CFR 668.49.

DATES: Interested persons are invited to submit comments on or before December 3, 2012.

ADDRESSES: Comments submitted in response to this notice should be submitted electronically through the Federal eRulemaking Portal at *http://www.regulations.gov* by selecting Docket ID number ED–2012–ICCD–0029 or via postal mail, commercial delivery, or hand delivery. *Please note that comments submitted by fax or email and those submitted after the comment period will not be accepted.* Written requests for information or comments submitted by postal mail or delivery should be addressed to the Director of the Information Collection Clearance Division, U.S. Department of Education, 400 Maryland Avenue SW., LBJ Room 2E117, Washington, DC 20202–4537. Please specify the complete title of the information collection and OMB Control Number when making your request.

SUPPLEMENTARY INFORMATION: Section 3506 of the Paperwork Reduction Act of 1995 (44 U.S.C. Chapter 35) requires that Federal agencies provide interested parties an early opportunity to comment on information collection requests. The Director, Information Collection Clearance Division, Privacy, Information and Records Management Services, Office of Management, publishes this notice containing proposed information collection requests at the beginning of the Departmental review of the information collection. The Department of Education is especially interested in public comment addressing the following issues: (1) Is this collection necessary to the proper functions of the Department; (2) will this information be processed and used in a timely manner; (3) is the estimate of burden accurate; (4) how might the Department enhance the quality, utility, and clarity of the information to be collected; and (5) how might the Department minimize the burden of this collection on the respondents, including through the use of information technology. Please note that written comments received in response to this notice will be considered public records.

Title of Collection: Student Assistance General Provisions Annual Fire Safety Report.

OMB Control Number: 1845–0097.

Type of Review: Extension.

Total Estimated Number of Annual Responses: 7,298.

Total Estimated Number of Annual Burden Hours: 7,299.

Abstract: Section 488(g) of the Higher Education Opportunity Act (HEOA) (Pub. L. 110–315) and the Department of Education's regulations at 34 CFR 668.49 require postsecondary institutions to collect statistics on fires in on-campus student housing facilities, including the number and cause of each fire, the number of injuries related to each fire that required treatment at a medical facility, the number of deaths related to each fire, and the value of property damage caused by each fire. Institutions must also publish an annual fire safety report containing the institution's policies regarding fire safety and the fire statistics information. Further the HEOA requires institutions to maintain a fire log that records the date, time, nature, and general location of each fire in on-campus student housing facilities. This request is for extending approval of reporting requirements contained in the regulations related to the administrative

requirements of the annual fire safety report. The information collection requirements in the regulations are necessary to prevent fraud and abuse of program and for reporting to Congress.

Dated: September 26, 2012.

Darrin A. King,

Director, Information Collection Clearance Division, Privacy, Information and Records Management Services, Office of Management.

[FR Doc. 2012–24220 Filed 10–2–12; 8:45 am]

BILLING CODE 4000–01–P

DEPARTMENT OF EDUCATION

Notice of Proposed Information Collection Requests; Federal Student Aid; Student Assistance General Provisions Non-Title IV Revenue Requirements (90/10)

SUMMARY: The Department of Education's regulations at 34 CFR 668.28(b) and 668.28(c) establish the requirements under which a prorprietary institution of higher education must derive at least ten percent of its annual revenue from resources other than Title IV Higher Education Act (HEA) funds, and implements the Net Present Value (NPV) formula and its alternative calculation prescribed by the statute and implemented through these regulations, and identifies sanctions for failing to meet the requirements.

DATES: Interested persons are invited to submit comments on or before December 3, 2012.

ADDRESSES: Comments submitted in response to this notice should be submitted electronically through the Federal eRulemaking Portal at *http://www.regulations.gov* by selecting Docket ID number ED–2012–ICCD–0030 or via postal mail, commercial delivery, or hand delivery. *Please note that comments submitted by fax or email and those submitted after the comment period will not be accepted.* Written requests for information or comments submitted by postal mail or delivery should be addressed to the Director of the Information Collection Clearance Division, U.S. Department of Education, 400 Maryland Avenue SW., LBJ Room 2E117, Washington, DC 20202–4537. Please specify the complete title of the information collection and OMB Control Number when making your request.

SUPPLEMENTARY INFORMATION: Section 3506 of the Paperwork Reduction Act of 1995 (44 U.S.C. chapter 35) requires that Federal agencies provide interested parties an early opportunity to comment on information collection requests. The Director, Information Collection Clearance Division, Privacy, Information and Records Management Services, Office of Management, publishes this notice containing proposed information collection requests at the beginning of the Departmental review of the information collection. The Department of Education is especially interested in public comment addressing the following issues: (1) Is this collection necessary to the proper functions of the Department; (2) will this information be processed and used in a timely manner; (3) is the estimate of burden accurate; (4) how might the Department enhance the quality, utility, and clarity of the information to be collected; and (5) how might the Department minimize the burden of this collection on the respondents, including through the use of information technology. Please note that written comments received in response to this notice will be considered public records.

Title of Collection: Student Assistance General Provisions Non-Title IV Revenue Requirements (90/10).

OMB Control Number: 1845–0096.

Type of Review: Extension.

Total Estimated Number of Annual Responses: 2,201.

Total Estimated Number of Annual Burden Hours: 3,302.

Abstract: As provided by the Higher Education Opportunity Act (Pub. L. 110–315), the Department of Education's regulations at 34 CFR 668.28(b) and 668.28(c) provide that a proprietary institution must derive at least 10% of its annual revenue from sources other than Title IV, HEA funds, identifies sanctions for failing to meet the requirement, and otherwise implement the statute by (1) specifying a NPV formula used to establish the revenue for institutional loans, (2) providing an administratively easier alternative to the NPV calculation, and (3) describing more fully the non-Title IV eligible programs from which revenue may be counted for 90/10 purposes. The regulations require an institution to disclose in a footnote to its audited financial statements the amounts of Federal and non-Federal revenues, by category, that it used in calculating its 90/10 ratio (see section 487(d) of the HEA). This request is for extending approval of reporting requirements contained in the regulations related to the administrative requirements of the non-Title IV revenue requirement (90/10) program. The information collection requirements in the regulations are necessary to determine eligibility to receive program benefits and to prevent fraud and abuse of program funds.

Dated: September 26, 2012.

Darrin A. King,

Director, Information Collection Clearance Division, Privacy, Information and Records Management Services, Office of Management.

[FR Doc. 2012–24222 Filed 10–2–12; 8:45 am]

BILLING CODE 4000–01–P

DEPARTMENT OF ENERGY

Federal Energy Regulatory Commission

[Project No. 12958–002]

Uniontown Hydro, LLC; Notice of Application Accepted for Filing, Soliciting Motions To Intervene and Protests, Ready for Environmental Analysis, and Soliciting Comments, Recommendations, Preliminary Terms and Conditions, and Preliminary Fishway Prescriptions

Take notice that the following hydroelectric application has been filed with the Commission and is available for public inspection.

a. *Type of Application:* Original Major License.

b. *Project No.:* 12958–002.

c. *Date filed:* April 29, 2011.

d. *Applicants:* Uniontown Hydro, LLC.

e. *Name of Project:* Uniontown Hydroelectric Project.

f. *Location:* The project would be located on the Ohio River at the existing U.S. Army Corps of Engineers' (Corps) John T. Myers Locks and Dam in Union County, Kentucky and Posey County, Indiana.

g. *Filed Pursuant to:* Federal Power Act 16 U.S.C. .791(a)—825(r).

h. *Applicant Contacts:* Brent L. Smith, COO, Symbiotics LLC, 371 Upper Terrace, Suite 2, Bend, OR 97702, (541) 330–8779; Dr. Vincent A. Lamarra, CEO, Symbiotics LLC, 975 South State Highway, Logan, UT 84321, (435) 752–2580.

i. *FERC Contact:* Jennifer Adams, (202) 502–8087, or *jennifer.adams@ferc.gov*.

j. *Deadline for filing motions to intervene and protests, comments, recommendations, preliminary terms and conditions, and preliminary prescriptions:* 60 days from the issuance date of this notice; reply comments are due 105 days from the issuance date of this notice.

Motions to intervene, protests, comments, recommendations, preliminary terms and conditions, and preliminary fishway prescriptions may be filed electronically via the Internet. See 18 CFR 385.2001(a)(1)(iii) and the instructions on the Commission's Web

site *http://www.ferc.gov/docs-filing/efiling.asp*. Commenters can submit brief comments up to 6,000 characters, without prior registration, using the eComment system at *http://www.ferc.gov/docs-filing/ecomment.asp*. You must include your name and contact information at the end of your comments. For assistance, please contact FERC Online Support at *FERCOnlineSupport@ferc.gov* or toll free at 1–866–208–3676, or for TTY, (202) 502–8659. Although the Commission strongly encourages electronic filing, documents may also be paper-filed. To paper-file, mail an original and seven copies to: Kimberly D. Bose, Secretary, Federal Energy Regulatory Commission, 888 First Street NE., Washington, DC 20426.

The Commission's Rules of Practice require all intervenors filing documents with the Commission to serve a copy of that document on each person on the official service list for the project. Further, if an intervenor files comments or documents with the Commission relating to the merits of an issue that may affect the responsibilities of a particular resource agency, they must also serve a copy of the document on that resource agency.

k. This application has been accepted for filing and is now ready for environmental analysis.

l. The existing John T. Myers Locks and Dam is a 3,504-foot-long, 119-foot-high dam containing 10 Taintor gates, each 110 feet high by 32 feet wide, and a concrete fixed weir. The main and auxiliary locks are on the Indiana side of the river. The main lock is 110 feet wide by 1,200 feet long and the auxiliary lock is 110 feet wide by 600 feet long. The impoundment above the John T. Myers Locks and Dam has a surface area of 19,350 acres and a storage capacity of 543,862 acre-feet.

The proposed Uniontown Project would consist of: (1) A 250-foot-long forebay; (2) a 144-foot-long, 69-foot-high trashrack, with 4-inch openings; (3) a 215-foot-long by 167-foot-wide powerhouse containing three Kaplan turbine-generators, each with an installed capacity of 22.2 megawatts (MW), for a total capacity of 66.6 MW; (4) a 200-foot-long tailrace; (5) a 411-foot-long, 102-foot-wide submerged dike in the downstream river channel for navigational purposes; (6) a 0.5 mile-long transmission line from the powerhouse to; (7) a switchyard; (8) a 32.0-mile-long, 138-kilovolt transmission line leading to an existing substation; (9) a 2,495-foot-long access road; and (10) appurtenant facilities. The estimated average annual generation for the project would be 224,000 megawatt hours. The project would operate run-of-river, utilizing the flows released under the current Corps operation guidelines.

m. A copy of the application is available for review at the Commission in the Public Reference Room or may be viewed on the Commission's Web site at *http://www.ferc.gov* using the ''eLibrary'' link. Enter the docket number excluding the last three digits in the docket number field to access the document. For assistance, contact FERC Online Support. Copies are also available for inspection and reproduction at the address in item h above.

Register online at *http://www.ferc.gov/docs-filing/esubscription.asp* to be notified via email of new filings and issuances related to this or other pending projects. For assistance, contact FERC Online Support.

n. Anyone may submit comments, a protest, or a motion to intervene in accordance with the requirements of Rules of Practice and Procedure, 18 CFR 385.210, .211, and .214. In determining the appropriate action to take, the Commission will consider all protests or other comments filed, but only those who file a motion to intervene in accordance with the Commission's Rules may become a party to the proceeding. Any comments, protests, or motions to intervene must be received on or before the specified comment date for the particular application.

All filings must (1) Bear in all capital letters the title ''PROTEST'', ''MOTION TO INTERVENE'', ''COMMENTS,'' ''REPLY COMMENTS,'' ''RECOMMENDATIONS,'' ''PRELIMINARY TERMS AND CONDITIONS,'' or ''PRELIMINARY FISHWAY PRESCRIPTIONS;'' (2) set forth in the heading the name of the applicant and the project number of the application to which the filing responds; (3) furnish the name, address, and telephone number of the person protesting or intervening; and (4) otherwise comply with the requirements of 18 CFR 385.2001 through 385.2005. All comments, recommendations, terms and conditions or prescriptions must set forth their evidentiary basis and otherwise comply with the requirements of 18 CFR 4.34(b). Agencies may obtain copies of the application directly from the applicant. A copy of any protest or motion to intervene must be served upon each representative of the applicant specified in the particular application. A copy of all other filings in reference to this application must be accompanied by proof of service on all persons listed in the service list prepared by the Commission in this proceeding, in accordance with 18 CFR 4.34(b) and 385.2010.

o. *Procedural Schedule:*

The application will be processed according to the following revised Hydropower Licensing Schedule. Revisions to the schedule may be made as appropriate.

Milestone	Target date
Filing of recommendations, preliminary terms and conditions, and preliminary fishway prescriptions.	November 2012.
Commission issues EA	March 2013.
Comments on EA	April 2013.
Modified terms and conditions.	June 2013.

p. Final amendments to the application must be filed with the Commission no later than 30 days from the issuance date of this notice.

q. A license applicant must file no later than 60 days following the date of issuance of the notice of acceptance and ready for environmental analysis provided for in 18 CFR 5.22: (1) A copy of the water quality certification; (2) a copy of the request for certification, including proof of the date on which the certifying agency received the request; or (3) evidence of waiver of water quality certification.

r. Any qualified applicant desiring to file a competing application must submit to the Commission, on or before the specified intervention deadline date, a competing development application, or a notice of intent to file such an application. Submission of a timely notice of intent allows an interested person to file the competing development application no later than 120 days after the specified intervention deadline date. Applications for preliminary permits will not be accepted in response to this notice.

A notice of intent must specify the exact name, business address, and telephone number of the prospective applicant, and must include an unequivocal statement of intent to submit a development application. A notice of intent must be served on the applicant(s) named in this public notice.

Dated: September 26, 2012.

Kimberly D. Bose,

Secretary.

[FR Doc. 2012–24364 Filed 10–2–12; 8:45 am]

BILLING CODE 6717–01–P

DEPARTMENT OF ENERGY

Federal Energy Regulatory Commission

[Project No. 12962–002]

Newburgh Hydro, LLC, Notice of Application Accepted for Filing, Soliciting Motions To Intervene and Protests, Ready for Environmental Analysis, and Soliciting Comments, Recommendations, Preliminary Terms and Conditions, and Preliminary Fishway Prescriptions

Take notice that the following hydroelectric application has been filed with the Commission and is available for public inspection.

a. *Type of Application:* Original Major License.

b. *Project No.:* 12962–002.

c. *Date filed:* April 29, 2011.

d. *Applicant:* Newburgh Hydro, LLC.

e. *Name of Project:* Newburgh Hydroelectric Project.

f. *Location:* The project would be located on the Ohio River at the existing U.S. Army Corps of Engineers' (Corps) Newburgh Locks and Dam in Henderson County, Kentucky and Warrick County, Indiana.

g. *Filed Pursuant to:* Federal Power Act 16 U.S.C. 791(a)–825(r).

h. *Applicant Contacts:* Brent L. Smith, COO, Symbiotics LLC, 371 Upper Terrace, Suite 2, Bend, OR 97702, (541) 330–8779; Dr. Vincent A. Lamarra, CEO, Symbiotics LLC, 975 South State Highway, Logan, UT 84321, (435) 752–2580.

i. *FERC Contact:* Jennifer Adams, (202) 502–8087, or j*ennifer.adams@ferc.gov.*

j. *Deadline for filing motions to intervene and protests, comments, recommendations, preliminary terms and conditions, and preliminary prescriptions:* 60 Days from the issuance date of this notice; reply comments are due 105 days from the issuance date of this notice.

Motions to intervene, protests, comments, recommendations, preliminary terms and conditions, and preliminary fishway prescriptions may be filed electronically via the Internet. See 18 CFR 385.2001(a)(1)(iii) and the instructions on the Commission's Web site *http://www.ferc.gov/docs-filing/efiling.asp.* Commenters can submit brief comments up to 6,000 characters, without prior registration, using the eComment system at *http://www.ferc.gov/docs-filing/ecomment.asp.* You must include your name and contact information at the end of your comments. For assistance, please contact FERC Online Support at *FERCOnlineSupport@ferc.gov* or toll free at 1–866–208–3676, or for TTY, (202) 502–8659. Although the Commission strongly encourages electronic filing, documents may also be paper-filed. To paper-file, mail an original and seven copies to: Kimberly D. Bose, Secretary, Federal Energy Regulatory Commission, 888 First Street NE., Washington, DC 20426.

The Commission's Rules of Practice require all intervenors filing documents with the Commission to serve a copy of that document on each person on the official service list for the project. Further, if an intervenor files comments or documents with the Commission relating to the merits of an issue that may affect the responsibilities of a particular resource agency, they must also serve a copy of the document on that resource agency.

k. This application has been accepted for filing and is now ready for environmental analysis.

l. The existing Newburgh Locks and Dam is a 2,275.5-foot-long by 122-foot-high dam containing nine Taintor gates, each 110 feet wide by 32 feet high, and a concrete fixed weir. The main and auxiliary locks are on the Indiana side of the river. The main lock is 110 feet wide by 1,200 feet long and the auxiliary lock is 110 feet wide by 600 feet long. The impoundment above the Newburgh Locks and Dam has a surface area of 16,390 acres and a storage capacity of 455,800 acre-feet.

The proposed Newburgh Project would consist of: (1) An 800-foot-long forebay; (2) a 144-foot-long, 69-foot-high trashrack, with 4-inch openings; (3) a 215-foot-long, 167-foot-wide submersible, concrete powerhouse containing three Kaplan turbine-generators, each with an installed capacity of 18.9 megawatts (MW), for a total capacity of 56.7 MW; (4) a 1,500-foot-long tailrace with a submerged dike approximately at the midpoint for navigation purposes; (5) an 800-foot-long transmission line from the powerhouse to; (6) a switchyard; (7) a 3.8-mile-long 138 kilovolt transmission line to an existing substation; (8) a 3,559-foot-long access road that would reroute State Road No. 2 and include a 8,000 square foot parking lot; and (9) appurtenant facilities. The estimated average annual generation for the project would be 169,000 megawatt hours. The project would operate run-of-river, utilizing the flows released under the current Corps operation guidelines.

m. A copy of the application is available for review at the Commission in the Public Reference Room or may be viewed on the Commission's Web site at *http://www.ferc.gov* using the ''eLibrary'' link. Enter the docket number excluding the last three digits in the docket number field to access the document. For assistance, contact FERC Online Support. Copies are also available for inspection and reproduction at the address in item h above.

Register online at *http://www.ferc.gov/docs-filing/esubscription.asp* to be notified via email of new filings and issuances related to this or other pending projects. For assistance, contact FERC Online Support.

n. Anyone may submit comments, a protest, or a motion to intervene in accordance with the requirements of Rules of Practice and Procedure, 18 CFR 385.210, .211, and .214. In determining the appropriate action to take, the Commission will consider all protests or other comments filed, but only those who file a motion to intervene in accordance with the Commission's Rules may become a party to the proceeding. Any comments, protests, or motions to intervene must be received on or before the specified comment date for the particular application.

All filings must (1) Bear in all capital letters the title ''PROTEST'', ''MOTION TO INTERVENE'', ''COMMENTS,'' ''REPLY COMMENTS,'' ''RECOMMENDATIONS,'' ''PRELIMINARY TERMS AND CONDITIONS,'' or ''PRELIMINARY FISHWAY PRESCRIPTIONS;'' (2) set forth in the heading the name of the applicant and the project number of the application to which the filing responds; (3) furnish the name, address, and telephone number of the person protesting or intervening; and (4) otherwise comply with the requirements of 18 CFR 385.2001 through 385.2005. All comments, recommendations, terms and conditions or prescriptions must set forth their evidentiary basis and otherwise comply with the requirements of 18 CFR 4.34(b). Agencies may obtain copies of the application directly from the applicant. A copy of any protest or motion to intervene must be served upon each representative of the applicant specified in the particular application. A copy of all other filings in reference to this application must be accompanied by proof of service on all persons listed in the service list prepared by the Commission in this proceeding, in accordance with 18 CFR 4.34(b) and 385.2010.

o. *Procedural Schedule:*

The application will be processed according to the following revised Hydropower Licensing Schedule.

Revisions to the schedule may be made as appropriate.

Milestone	Target date
Filing of recommendations, preliminary terms and conditions, and preliminary fishway prescriptions.	November 2012.
Commission issues EA	March 2013.
Comments on EA	April 2013.
Modified terms and conditions.	June 2013.

p. Final amendments to the application must be filed with the Commission no later than 30 days from the issuance date of this notice.

q. A license applicant must file no later than 60 days following the date of issuance of the notice of acceptance and ready for environmental analysis provided for in 18 CFR 5.22: (1) A copy of the water quality certification; (2) a copy of the request for certification, including proof of the date on which the certifying agency received the request; or (3) evidence of waiver of water quality certification.

r. Any qualified applicant desiring to file a competing application must submit to the Commission, on or before the specified intervention deadline date, a competing development application, or a notice of intent to file such an application. Submission of a timely notice of intent allows an interested person to file the competing development application no later than 120 days after the specified intervention deadline date. Applications for preliminary permits will not be accepted in response to this notice.

A notice of intent must specify the exact name, business address, and telephone number of the prospective applicant, and must include an unequivocal statement of intent to submit a development application. A notice of intent must be served on the applicant(s) named in this public notice.

Dated: September 26, 2012.

Kimberly D. Bose,

Secretary.

[FR Doc. 2012–24365 Filed 10–2–12; 8:45 am]

BILLING CODE 6717–01–P

DEPARTMENT OF ENERGY

Federal Energy Regulatory Commission

[Docket No. CP12–524–000]

Questar Pipeline Company; Notice of Application

On September 18, 2012, Questar Pipeline Company (Questar) filed with the Federal Energy Regulatory Commission (Commission) an application under section 7(c) of the Natural Gas Act and section 157.7 of the Commission's Regulations for authority to modify existing natural gas facilities in Carbon and Utah Counties, Utah on its southern pipeline transmission system. The Main Line 41 Compression Project involves upgrades to compression station equipment and associated facilities as more fully detailed in the Application.

Questions concerning this application may be directed to Greg Williams, Senior Regulatory Affairs Analyst, 180 East 100 South, P.O. Box 45360, Salt Lake City, Utah 84145–0360 or by calling 801–324–5370, 801–324–5623 (fax) or by emailing *greg.williams@questar.com.*

Pursuant to section 157.9 of the Commission's rules, 18 CFR 157.9, within 90 days of this Notice the Commission staff will either: complete its environmental assessment (EA) and place it into the Commission's public record (eLibrary) for this proceeding; or issue a Notice of Schedule for Environmental Review. If a Notice of Schedule for Environmental Review is issued, it will indicate, among other milestones, the anticipated date for the Commission staff's issuance of the final environmental impact statement (FEIS) or EA for this proposal. The filing of the EA in the Commission's public record for this proceeding or the issuance of a Notice of Schedule for Environmental Review will serve to notify federal and state agencies of the timing for the completion of all necessary reviews, and the subsequent need to complete all federal authorizations within 90 days of the date of issuance of the Commission staff's FEIS or EA.

There are two ways to become involved in the Commission's review of this project. First, any person wishing to obtain legal status by becoming a party to the proceedings for this project should, on or before the comment date stated below, file with the Federal Energy Regulatory Commission, 888 First Street NE., Washington, DC 20426, a motion to intervene in accordance with the requirements of the Commission's Rules of Practice and Procedure (18 CFR 385.214 or 385.211) and the Regulations under the NGA (18 CFR 157.10). A person obtaining party status will be placed on the service list maintained by the Secretary of the Commission and will receive copies of all documents filed by the applicant and by all other parties. A party must submit 7 copies of filings made with the Commission and must mail a copy to the applicant and to every other party in the proceeding. Only parties to the proceeding can ask for court review of Commission orders in the proceeding.

However, a person does not have to intervene in order to have comments considered. The second way to participate is by filing with the Secretary of the Commission, as soon as possible, an original and two copies of comments in support of or in opposition to this project. The Commission will consider these comments in determining the appropriate action to be taken, but the filing of a comment alone will not serve to make the filer a party to the proceeding. The Commission's rules require that persons filing comments in opposition to the project provide copies of their protests only to the party or parties directly involved in the protest.

The Commission encourages electronic submission of protests and interventions in lieu of paper using the ''eFiling'' link at *http://www.fere.gov.* Persons unable to file electronically should submit an original and 7 copies of the protest or intervention to the Federal Energy Regulatory Commission, 888 First Street NE., Washington, DC 20426. This filing is accessible on-line at *http://www.ferc.gov.using* the ''eLibrary'' link and is available for review in the Commission's Public Reference Room in Washington, DC. There is an ''eSubscription'' link on the web site that enables subscribers to receive email notification when a document is added to a subscribed docket(s). For assistance with any FERC Online service, please email *FERCOnlineSupport@ferc.gov,* or call (866) 208–3676 (toll free). For TTY, call (202) 502–8659.

Comment Date: 5 p.m. Eastern Time on October 18, 2012.

Dated: September 27, 2012.

Kimberly D. Bose,

Secretary.

[FR Doc. 2012–24371 Filed 10–2–12; 8:45 am]

BILLING CODE 6717–01–P

DEPARTMENT OF ENERGY

Federal Energy Regulatory Commission

Combined Notice of Filings

Take notice that the Commission has received the following Natural Gas Pipeline Rate and Refund Report filings:

Filings Instituting Proceedings

Docket Numbers: RP12–1052–000.

Applicants: Natural Gas Pipeline Company of America.

Description: Negotiated Rate—Tenaska LPS–ROs to be effective 10/1/2012.
Filed Date: 9/24/12.
Accession Number: 20120924–5035.
Comments Due: 5 p.m. ET 10/9/12.

Docket Numbers: RP12–1053–000.
Applicants: Natural Gas Pipeline Company of America.
Description: Penalty Revenue Crediting Report of Natural Gas Pipeline Company of America LLC.
Filed Date: 9/24/12.
Accession Number: 20120924–5062.
Comments Due: 5 p.m. ET 10/9/12.

Docket Numbers: RP12–1054–000.
Applicants: Cameron Interstate Pipeline, LLC.
Description: Cameron Interstate Pipeline LLC Compliance Filing per FERC Order 587–V NAESB 2.0 to be effective 12/1/2012.
Filed Date: 9/24/12.
Accession Number: 20120924–5066.
Comments Due: 5 p.m. ET 10/9/12.

Docket Numbers: RP12–1055–000.
Applicants: LA Storage, LLC.
Description: LA Storage Compliance Filing per FERC Order 587–V NAESB V. 2.0 to be effective 12/1/2012.
Filed Date: 9/24/12.
Accession Number: 20120924–5067.
Comments Due: 5 p.m. ET 10/9/12.

Docket Numbers: RP12–1056–000.
Applicants: Mississippi Hub, LLC.
Description: Mississippi Hub Compliance Filing per FERC Order 587–V NAESB V. 2.0 to be effective 12/1/2012.
Filed Date: 9/24/12.
Accession Number: 20120924–5068.
Comments Due: 5 p.m. ET 10/9/12.

Docket Numbers: RP12–1057–000.
Applicants: Natural Gas Pipeline Company of America.
Description: Negotiated Rate Filing—J–W Gathering to be effective 10/1/2012.
Filed Date: 9/24/12.
Accession Number: 20120924–5148.
Comments Due: 5 p.m. ET 10/9/12.

Docket Numbers: RP12–1058–000.
Applicants: Pine Prairie Energy Center, LLC.
Description: Pine Prairie Enhanced Services to be effective 11/1/2012.
Filed Date: 9/25/12.
Accession Number: 20120925–5002.
Comments Due: 5 p.m. ET 10/9/12.

Any person desiring to intervene or protest in any of the above proceedings must file in accordance with Rules 211 and 214 of the Commission's Regulations (18 CFR 385.211 and 385.214) on or before 5 p.m. Eastern time on the specified comment date. Protests may be considered, but intervention is necessary to become a party to the proceeding.

The filings are accessible in the Commission's eLibrary system by clicking on the links or querying the docket number.

eFiling is encouraged. More detailed information relating to filing requirements, interventions, protests, and service can be found at: *http://www.ferc.gov/docs-filing/efiling/filing-req.pdf.* For other information, call (866) 208–3676 (toll free). For TTY, call (202) 502–8659.

Dated September 25, 2012.

Nathaniel J. Davis, Sr.,

Deputy Secretary.

[FR Doc. 2012–24227 Filed 10–2–12; 8:45 am]

BILLING CODE 6717–01–P

DEPARTMENT OF ENERGY

Federal Energy Regulatory Commission

Combined Notice of Filings #1

Take notice that the Commission received the following electric corporate filings:

Docket Numbers: EC12–145–000.
Applicants: ITC Holdings Corp., Entergy Corporation, Midwest Independent Transmission System.
Description: Joint Application Under Sections 203 and 205 of the Federal Power Act and Petition for Declaratory Order on Application of Section 305(a) of the Federal Power Act of ITC Holdings Corp., Entergy Corporation *et al.*
Filed Date: 9/24/12.
Accession Number: 20120924–5181
Comments Due: 5 p.m. ET 11/8/12.

Take notice that the Commission received the following exempt wholesale generator filings:

Docket Numbers: EG12–113–000.
Applicants: Groton Wind, LLC.
Description: Self-Certification of Exempt Wholesale Generator Status of Groton Wind, LLC.
Filed Date: 9/24/12.
Accession Number: 20120924–5053.
Comments Due: 5 p.m. ET 10/15/12.

Docket Numbers: EG12–114–000.
Applicants: New England Wind, LLC.
Description: Self-Certification of Exempt Wholesale Generator Status of New England Wind, LLC.
Filed Date: 9/24/12.
Accession Number: 20120924–5054.
Comments Due: 5 p.m. ET 10/15/12.
Docket Numbers: EG12–115–000.
Applicants: Penascal II Wind Project, LLC.
Description: Notice of Self-Certification of Exempt Wholesale Generator Status of Penascal II Wind Project, LLC.
Filed Date: 9/25/12.
Accession Number: 20120925–5014.
Comments Due: 5 p.m. ET 10/16/12.

Take notice that the Commission received the following electric rate filings:

Docket Numbers: ER12–1753–000.
Applicants: Wyoming Colorado Intertie, LLC.
Description: Wyoming Colorado Intertie, LLC. and Wyoming Wind & Power, LLC. submit additional information and request expedited action under ER12–1753.
Filed Date: 9/21/12.
Accession Number: 20120921–5160.
Comments Due: 5 p.m. ET 10/1/12.

Docket Numbers: ER12–2514–000.
Applicants: Susterra Energy, LLC.
Description: Susterra Energy, LLC. submits supplement to application for market based authority.
Filed Date: 9/20/12.
Accession Number: 20120920–5162.
Comments Due: 5 p.m. ET 10/11/12.

Docket Numbers: ER12–2523–001.
Applicants: Midwest Independent Transmission System.
Description: Amend Brownton-GRE–NSP T–T to be effective 7/31/2012 under.
Filed Date: 9/24/12.
Accession Number: 20120924–5138.
Comments Due: 5 p.m. ET 10/15/12.

Docket Numbers: ER12–2524–001.
Applicants: Midwest Independent Transmission System.
Description: Sheas Lake-GRE–NSP T–T Amendment to be effective 8/10/2012.
Filed Date: 9/25/12.
Accession Number: 20120925–5059.
Comments Due: 5 p.m. ET 10/16/12.

Docket Numbers: ER12–2680–000.
Applicants: Wells Fargo Commodities, LLC.
Description: WFCLLC. Notice of Cancellation to be effective 9/30/2012.
Filed Date: 9/25/12.
Accession Number: 20120925–5001.
Comments Due: 5 p.m. ET 10/16/12.

Docket Numbers: ER12–2681–000.
Applicants: ITC Holdings Corp., Entergy Corporation, Midwest Independent Transmission System.
Description: Joint Application Under Sections 203 and 205 of the Federal Power Act and Petition for Declaratory Order on Application of Section 305(a) of the Federal Power Act of ITC Holdings Corp., Entergy Corporation *et al.*
Filed Date: 9/24/12.
Accession Number: 20120924–5181.
Comments Due: 5 p.m. ET 11/8/12.

The filings are accessible in the Commission's eLibrary system by clicking on the links or querying the docket number.

Any person desiring to intervene or protest in any of the above proceedings must file in accordance with Rules 211 and 214 of the Commission's Regulations (18 CFR 385.211 and 385.214) on or before 5 p.m. Eastern time on the specified comment date. Protests may be considered, but intervention is necessary to become a party to the proceeding.

eFiling is encouraged. More detailed information relating to filing requirements, interventions, protests, service, and qualifying facilities filings can be found at: *http://www.ferc.gov/docs-filing/efiling/filing-req.pdf.* For other information, call (866) 208–3676 (toll free). For TTY, call (202) 502–8659.

Dated: September 25, 2012.

Nathaniel J. Davis, Sr.,

Deputy Secretary.

[FR Doc. 2012–24226 Filed 10–2–12; 8:45 am]

BILLING CODE 6717–01–P

DEPARTMENT OF ENERGY

Federal Energy Regulatory Commission

Combined Notice of Filings

Take notice that the Commission has received the following Natural Gas Pipeline Rate and Refund Report filings:

Filings Instituting Proceedings

Docket Numbers: RP12–1059–000.
Applicants: Dominion Transmission, Inc.
Description: DTI—September 25, 2012 Negotiated Rate Agreements to be effective 10/1/2012.
Filed Date: 9/25/12.
Accession Number: 20120925–5026.
Comments Due: 5 p.m. ET 10/9/12.

Docket Numbers: RP12–1060–000.
Applicants: Kinder Morgan Interstate Gas Transmission.
Description: Neg Rate 2012–09–21. MGE to be effective 10/1/2012.
Filed Date: 9/25/12.
Accession Number: 20120925–5034.
Comments Due: 5 p.m. ET 10/9/12.

Docket Numbers: RP12–1061–000.
Applicants: Tres Palacios Gas Storage LLC.
Description: Tres Palacios Gas Storage LLC—Modify Enhanced Interruptible Wheeling Service to be effective 11/1/2012.
Filed Date: 9/25/12.
Accession Number: 20120925–5104.
Comments Due: 5 p.m. ET 10/9/12.

Docket Numbers: RP12–1062–000.
Applicants: Texas Eastern Transmission, LP.
Description: Order 587–V Compliance Filing (NAESB Version 2.0 Standards) TETLP to be effective 12/1/2012.
Filed Date: 9/25/12.
Accession Number: 20120925–5131.
Comments Due: 5 p.m. ET 10/9/12.

Docket Numbers: RP12–1063–000.
Applicants: Algonquin Gas Transmission, LLC.
Description: Order 587–V Compliance Filing (NAESB Version 2.0 Standards) AGT to be effective 12/1/2012.
Filed Date: 9/25/12.
Accession Number: 20120925–5132.
Comments Due: 5 p.m. ET 10/9/12.

Docket Numbers: RP12–1064–000.
Applicants: Venice Gathering System, L.L.C.
Description: NAESB 2.0 Compliance Filing to be effective 12/1/2012.
Filed Date: 9/25/12.
Accession Number: 20120925–5133.
Comments Due: 5 p.m. ET 10/9/12.

Docket Numbers: RP12–1065–000.
Applicants: Steckman Ridge, LP.
Description: Order 587–V Compliance Filing (NAESB Version 2.0 Standards) SR to be effective 12/1/2012.
Filed Date: 9/25/12.
Accession Number: 20120925–5134.
Comments Due: 5 p.m. ET 10/9/12.

Docket Numbers: RP12–1066–000.
Applicants: Big Sandy Pipeline, LLC.
Description: Order 587–V Compliance Filing (NAESB Version 2.0 Standards) BSP to be effective 12/1/2012.
Filed Date: 9/25/12.
Accession Number: 20120925–5135.
Comments Due: 5 p.m. ET 10/9/12.

Any person desiring to intervene or protest in any of the above proceedings must file in accordance with Rules 211 and 214 of the Commission's Regulations (18 CFR 385.211 and 385.214) on or before 5 p.m. Eastern time on the specified comment date. Protests may be considered, but intervention is necessary to become a party to the proceeding.

Filings in Existing Proceedings

Docket Numbers: RP12–130–003.
Applicants: Paiute Pipeline Company.
Description: NAESB 2.0 Revision to be effective 12/1/2012.
Filed Date: 9/26/12.
Accession Number: 20120926–5001.
Comments Due: 5 p.m. ET 10/9/12.

Any person desiring to protest in any the above proceedings must file in accordance with Rule 211 of the Commission's Regulations (18 CFR 385.211) on or before 5 p.m. Eastern time on the specified comment date.

The filings are accessible in the Commission's eLibrary system by clicking on the links or querying the docket number.

eFiling is encouraged. More detailed information relating to filing requirements, interventions, protests, and service can be found at: *http://www.ferc.gov/docs-filing/efiling/filing-req.pdf.* For other information, call (866) 208–3676 (toll free). For TTY, call (202) 502–8659.

Dated: September 26, 2012.

Nathaniel J. Davis, Sr.,

Deputy Secretary.

[FR Doc. 2012–24224 Filed 10–2–12; 8:45 am]

BILLING CODE 6717–01–P

DEPARTMENT OF ENERGY

Federal Energy Regulatory Commission

[Project No. 2696–033–NY]

Town of Stuyvesant, New York and Albany Engineering Corporation; Notice of Availability of Draft Environmental Assessment

In accordance with the National Environmental Policy Act of 1969 and the Federal Energy Regulatory Commission's regulations, 18 CFR part 380 (Order No. 486, 52 FR 47897), the Office of Energy Projects has reviewed the application for a new license for the 4,320-kilowatt (kW) Stuyvesant Falls Hydroelectric Project located on Kinderhook Creek in Columbia County, New York, and prepared a draft Environmental Assessment (draft EA). In the draft EA, Commission staff analyzes the potential environmental effects of relicensing the project and concludes that issuing a new license for the project, with appropriate environmental measures, would not constitute a major federal action significantly affecting the quality of the human environment.

A copy of the draft EA is on file with the Commission and is available for public inspection. The draft EA may also be viewed on the Commission's Web site at *http://www.ferc.gov* using the ''eLibrary'' link. Enter the docket number excluding the last three digits in the docket number field to access the document. For assistance, contact FERC Online Support at *FERCOnlineSupport@ferc.gov* or toll-free at (866) 208–3676, or for TTY, (202) 502–8659.

You may also register online at *http://www.ferc.gov/docs-filing/esubscription.asp* to be notified via email of new filings and issuances related to this or other pending projects. For assistance, contact FERC Online Support.

Comments on the draft EA should be filed within 30 days from the date of this notice. Comments may be filed electronically via the Internet. See 18

CFR 385.2001(a)(1)(iii) and the instructions on the Commission's Web site *http://www.ferc.gov/docs-filing/efiling.asp.* Commenters can submit brief comments up to 6,000 characters, without prior registration, using the eComment system at *http://www.ferc.gov/docs-filing/ecomment.asp.* You must include your name and contact information at the end of your comments. For assistance, please contact FERC Online Support. Although the Commission strongly encourages electronic filing, documents may also be paper-filed. To paper-file, mail an original and seven copies to: Kimberly D. Bose, Secretary, Federal Energy Regulatory Commission, 888 First Street NE., Washington, DC 20426. Please affix ''Stuyvesant Falls Hydroelectric Project No. 2696–033'' to all comments.

For further information, contact Andy Bernick at (202) 502–8660.

Dated: September 27, 2012.

Kimberly D. Bose,

Secretary.

[FR Doc. 2012–24363 Filed 10–2–12; 8:45 am]

BILLING CODE 6717–01–P

DEPARTMENT OF ENERGY

Federal Energy Regulatory Commission

[Project No. 13519–001]

Lock + Hydro Friends Fund XIX, LLC; Notice of Intent To File License Application, Filing of Pre-Application Document, and Approving Use of the Traditional Licensing Process

a. *Type of Filing:* Notice of Intent to File License Application and Request to Use the Traditional Licensing Process.

b. *Project No.:* 13519–001.

c. *Date Filed:* August 7, 2012.

d. *Submitted By:* Lock + Hydro Friends Fund XIX, LLC.

e. *Name of Project:* Claiborne Hydroelectric Project.

f. *Location:* At the U.S. Army Corps of Engineers' (Corps) Claiborne Lock and Dam on the Alabama River, in Monroe County, Alabama. The project would occupy approximately 3 acres of United States lands administered by the Corps.

g. *Filed Pursuant to:* 18 CFR 5.3 of the Commission's regulations.

h. *Potential Applicant Contact:* Mark R. Stover, Vice President of Corporate Affairs, Hydro Green Energy, LLC, 900 Oakmont Lane, Suite 310, Westmont, IL 60559; (877) 556–6566 x 711; *mark@hgenergy.com.*

i. *FERC Contact:* Rachel McNamara at (202) 502–8340l or email at *rachel.mcnamara@ferc.gov.*

j. Lock + Hydro Friends Fund XIX, LLC filed its request to use the Traditional Licensing Process on August 7, 2012. Lock + Hydro Friends Fund XIX, LLC provided public notice of its request on August 9, 2012. In a letter dated September 27, 2012, the Director of the Division of Hydropower Licensing approved Lock + Hydro Friends Fund XIX, LLC's request to use the Traditional Licensing Process.

k. With this notice, we are initiating informal consultation with: (a) The U.S. Fish and Wildlife Service and NOAA Fisheries under section 7 of the Endangered Species Act and the joint agency regulations thereunder at 50 CFR, Part 402; (b) NOAA Fisheries under section 305(b) of the Magnuson-Stevens Fishery Conservation and Management Act and implementing regulations at 50 CFR 600.920; and (c) the Alabama State Historic Preservation Officer, as required by section 106, National Historical Preservation Act, and the implementing regulations of the Advisory Council on Historic Preservation at 36 CFR 800.2.

l. With this notice, we are designating Lock + Hydro Friends Fund XIX as the Commission's non-federal representative for carrying out informal consultation, pursuant to section 7 of the Endangered Species Act, section 305 of the Magnuson-Stevens Fishery Conservation and Management Act, and section 106 of the National Historic Preservation Act.

m. Lock + Hydro Friends Fund XIX, LLC filed a Pre-Application Document (PAD; including a proposed process plan and schedule) with the Commission, pursuant to 18 CFR 5.6 of the Commission's regulations.

n. A copy of the PAD is available for review at the Commission in the Public Reference Room or may be viewed on the Commission's Web site (*http://www.ferc.gov*), using the ''eLibrary'' link. Enter the docket number, excluding the last three digits in the docket number field to access the document. For assistance, contact FERC Online Support at *FERCONlineSupport@ferc.gov* or toll free at 1–866–208–3676, or for TTY, (202) 502–8659. A copy is also available for inspection and reproduction at the address in paragraph h.

o. Register online at *http://www.ferc.gov/docs-filing/esubscription.asp* to be notified via email of new filing and issuances related to this or other pending projects. For assistance, contact FERC Online Support.

Dated: September 27, 2012.

Kimberly D. Bose,

Secretary.

[FR Doc. 2012–24346 Filed 10–2–12; 8:45 am]

BILLING CODE 6717–01–P

DEPARTMENT OF ENERGY

Federal Energy Regulatory Commission

[Docket No. EL12–107–000]

ITC Holdings Corp., Entergy Corporation, Midwest Independent Transmission System Operator, Inc.; Notice of Petition for Declaratory Order

Take notice that on September 24, 2012, ITC Holdings Corp., Entergy Corporation, and Midwest Independent Transmission System Operator, Inc., pursuant to section 207 of the Federal Energy Regulatory Commission's (Commission) Rules of Practice and Procedure, 18 CFR 385.207 and section 305 of the Federal Power Act (FPA), 16 U.S.C. 825d(a), filed a petition for declaratory order requesting that the Commission declare that the Separation Plan, as more fully described in the petition, will not violate section 305(a) of the FPA.

Any person desiring to intervene or to protest this filing must file in accordance with Rules 211 and 214 of the Commission's Rules of Practice and Procedure (18 CFR 385.211, 385.214). Protests will be considered by the Commission in determining the appropriate action to be taken, but will not serve to make protestants parties to the proceeding. Any person wishing to become a party must file a notice of intervention or motion to intervene, as appropriate. Such notices, motions, or protests must be filed on or before the comment date. On or before the comment date, it is not necessary to serve motions to intervene or protests on persons other than the Applicant.

The Commission encourages electronic submission of protests and interventions in lieu of paper using the ''eFiling'' link at *http://www.ferc.gov.* Persons unable to file electronically should submit an original and 14 copies of the protest or intervention to the Federal Energy Regulatory Commission, 888 First Street, NE., Washington, DC 20426.

This filing is accessible on-line at *http://www.ferc.gov,* using the ''eLibrary'' link and is available for review in the Commission's Public Reference Room in Washington, DC. There is an ''eSubscription'' link on the web site that enables subscribers to receive email notification when a

document is added to a subscribed docket(s).

For assistance with any FERC Online service, please email *FERCOnlineSupport@ferc.gov,* or call (866) 208–3676 (toll free). For TTY, call (202) 502–8659.

Comment Date: 5 p.m. Eastern Time on November 8, 2012.

Dated: September 26, 2012.

Kimberly D. Bose,

Secretary.

[FR Doc. 2012–24372 Filed 10–2–12; 8:45 am]

BILLING CODE 6717–01–P

DEPARTMENT OF ENERGY

Federal Energy Regulatory Commission

Notice of Petition for Enforcement

In the matter of: EL12–108–000, QF11–46–001, QF11–47–001, QF11–48–001; Murphy Flat Energy LLC, Murphy Flat Mesa LLC, Murphy Flat Wind LLC.

Take notice that on September 25, 2012, pursuant to section 210(h)(2) of the Public Utility Regulatory Policies Act of 1978 (PURPA),[1] Murphy Flat Energy LLC, Murphy Flat Mesa LLC, and Murphy Flat Wind LLC (collectively Petitioners), filed a petition requesting the Federal Energy Regulatory Commission take enforcement action under section 210(h) of PURPA against the Idaho Public Utilities Commission (Idaho PUC) to overturn the Idaho PUC's Murphy Flat Order[2] and declare that legally enforceable obligations did arise, as more fully described in the petition.

Any person desiring to intervene or to protest this filing must file in accordance with Rules 211 and 214 of the Commission's Rules of Practice and Procedure (18 CFR 385.211, 385.214). Protests will be considered by the Commission in determining the appropriate action to be taken, but will not serve to make protestants parties to the proceeding. Any person wishing to become a party must file a notice of intervention or motion to intervene, as appropriate. Such notices, motions, or protests must be filed on or before the comment date. On or before the comment date, it is not necessary to serve motions to intervene or protests on persons other than the Applicant

The Commission encourages electronic submission of protests and interventions in lieu of paper using the ''eFiling'' link at *http://www.ferc.gov.* Persons unable to file electronically should submit an original and 14 copies of the protest or intervention to the Federal Energy Regulatory Commission, 888 First Street NE., Washington, DC 20426.

This filing is accessible on-line at *http://www.ferc.gov,* using the ''eLibrary'' link and is available for review in the Commission's Public Reference Room in Washington, DC. There is an ''eSubscription'' link on the web site that enables subscribers to receive email notification when a document is added to a subscribed docket(s). For assistance with any FERC Online service, please email *FERCOnlineSupport@ferc.gov,* or call (866) 208–3676 (toll free). For TTY, call (202) 502–8659.

Comment Date: 5 p.m. Eastern Time on October 15, 2012.

Dated: September 26, 2012.

Kimberly D. Bose,

Secretary.

[FR Doc. 2012–24361 Filed 10–2–12; 8:45 am]

BILLING CODE 6717–01–P

[1] 16 U.S.C. 824a-3(h).

[2] Idaho PUC Order No. 32255, Case No. IPC–E–10–56 et al. (June 8, 2011) (''Murphy Flat Order'').

DEPARTMENT OF ENERGY

Federal Energy Regulatory Commission

[Project No. 13497–001]

FFP Project 66 LLC; Notice of Preliminary Permit Application Accepted for Filing and Soliciting Comments, Motions To Intervene, and Competing Applications

On September 4, 2012, FFP Project 66, LLC filed an application for a preliminary permit, pursuant to section 4(f) of the Federal Power Act (FPA), proposing to study the feasibility of a hydropower project located on the Mississippi River, near Fairview, in Concordia Parish, Louisiana, and Adams County, Mississippi. The sole purpose of a preliminary permit, if issued, is to grant the permit holder priority to file a license application during the permit term. A preliminary permit does not authorize the permit holder to perform any land-disturbing activities or otherwise enter upon lands or waters owned by others without the owners' express permission.

The proposed Saint Catherine Bend hydrokinetic project would consist of the following: (1) Up to 6,382 SmarTurbine generating units installed in arrays on the bottom of the river; (2) the total capacity of the installation would be up to 255,280 kilowatts; (3) flexible cables would convey each arrays power to a metering station; and (4) a transmission line would interconnect with the power grid. The proposed project would have an average annual generation of 580,564,000 kilowatt-hours, which would be sold to a local utility.

Applicant Contact: Ramya Swaminathan, Free Flow Power Corporation, 239 Causeway Street, Boston, MA 02114; phone (978) 226–1531.

FERC Contact: Michael Spencer, (202) 502–6093.

Deadline for filing comments, motions to intervene, competing applications (without notices of intent), or notices of intent to file competing applications: 60 days from the issuance of this notice. Competing applications and notices of intent must meet the requirements of 18 CFR 4.36. Comments, motions to intervene, notices of intent, and competing applications may be filed electronically via the Internet. See 18 CFR 385.2001(a)(1)(iii) and the instructions on the Commission's Web site *http://www.ferc.gov/docs-filing/efiling.asp.* Commenters can submit brief comments up to 6,000 characters, without prior registration, using the eComment system at *http://www.ferc.gov/docs-filing/ecomment.asp.* You must include your name and contact information at the end of your comments. For assistance, please contact FERC Online Support at *FERCOnlineSupport@ferc.gov* or toll free at 1–866–208–3676, or for TTY, (202) 502–8659. Although the Commission strongly encourages electronic filing, documents may also be paper-filed. To paper-file, mail an original and seven copies to: Kimberly D. Bose, Secretary, Federal Energy Regulatory Commission, 888 First Street NE., Washington, DC 20426.

More information about this project, including a copy of the application, can be viewed or printed on the ''eLibrary'' link of Commission's Web site at *http://www.ferc.gov/docs-filing/elibrary.asp.* Enter the docket number (P–13497) in the docket number field to access the document. For assistance, contact FERC Online Support.

Dated: September 27, 2012.

Kimberly D. Bose,

Secretary.

[FR Doc. 2012–24349 Filed 10–2–12; 8:45 am]

BILLING CODE 6717–01–P

DEPARTMENT OF ENERGY

Federal Energy Regulatory Commission

[Project No. 13477–001]

FFP Project 67 LLC; Notice of Preliminary Permit Application Accepted For Filing and Soliciting Comments, Motions To Intervene, and Competing Applications

On September 4, 2012, FFP Project 67, LLC filed an application for a preliminary permit, pursuant to section 4(f) of the Federal Power Act (FPA), proposing to study the feasibility of a hydropower project located on the Mississippi River, near Saint Joseph, in Tensas Parish, Louisiana and Claiborne County, Mississippi. The sole purpose of a preliminary permit, if issued, is to grant the permit holder priority to file a license application during the permit term. A preliminary permit does not authorize the permit holder to perform any land-disturbing activities or otherwise enter upon lands or waters owned by others without the owners' express permission.

The proposed Bondurant Chute hydrokinetic project would consist of the following: (1) Up to 2,300 SmarTurbine generating units installed in arrays on the bottom of the river; (2) the total capacity of the installation would be up to 92,000 kilowatts; (3) flexible cables would convey each arrays power to a metering station; and (4) a transmission line would interconnect with the power grid. The proposed project would have an average annual generation of 209,229,000 kilowatt-hours (kWh), which would be sold to a local utility.

Applicant Contact: Ramya Swaminathan, Free Flow Power Corporation, 239 Causeway Street, Boston, MA 02114; phone (978) 226–1531.

FERC Contact: Michael Spencer, (202) 502–6093.

Deadline for filing comments, motions to intervene, competing applications (without notices of intent), or notices of intent to file competing applications: 60 days from the issuance of this notice. Competing applications and notices of intent must meet the requirements of 18 CFR 4.36. Comments, motions to intervene, notices of intent, and competing applications may be filed electronically via the Internet. See 18 CFR 385.2001(a)(1)(iii) and the instructions on the Commission's Web site *http://www.ferc.gov/docs-filing/efiling.asp.* Commenters can submit brief comments up to 6,000 characters, without prior registration, using the eComment system at *http://www.ferc.gov/docs-filing/ecomment.asp.* You must include your name and contact information at the end of your comments. For assistance, please contact FERC Online Support at *FERCOnlineSupport@ferc.gov* or toll free at 1–866–208–3676, or for TTY, (202) 502–8659. Although the Commission strongly encourages electronic filing, documents may also be paper-filed. To paper-file, mail an original and seven copies to: Kimberly D. Bose, Secretary, Federal Energy Regulatory Commission, 888 First Street NE., Washington, DC 20426.

More information about this project, including a copy of the application, can be viewed or printed on the ''eLibrary'' link of Commission's Web site at *http://www.ferc.gov/docs-filing/elibrary.asp.* Enter the docket number (P–13477) in the docket number field to access the document. For assistance, contact FERC Online Support.

Dated: September 27, 2012.

Kimberly D. Bose,

Secretary.

[FR Doc. 2012–24350 Filed 10–2–12; 8:45 am]

BILLING CODE 6717–01–P

DEPARTMENT OF ENERGY

Federal Energy Regulatory Commission

[Project No. 13478–001]

FFP Project 68 LLC; Notice of Preliminary Permit Application Accepted for Filing and Soliciting Comments, Motions To Intervene, and Competing Applications

On September 4, 2012, FFP Project 68, LLC filed an application for a preliminary permit, pursuant to section 4(f) of the Federal Power Act (FPA), proposing to study the feasibility of a hydropower project located on the Mississippi River, near Saint Joseph, in Tensas Parish, Louisiana and Claiborne County, Mississippi. The sole purpose of a preliminary permit, if issued, is to grant the permit holder priority to file a license application during the permit term. A preliminary permit does not authorize the permit holder to perform any land-disturbing activities or otherwise enter upon lands or waters owned by others without the owners' express permission.

The proposed Davis Island Bend hydrokinetic project would consist of the following: (1) Up to 3,432 SmarTurbine generating units installed in arrays on the bottom of the river; (2) the total capacity of the installation would be up to 137,280 kilowatts; (3) flexible cables would convey each arrays power to a metering station; and (4) a transmission line would interconnect with the power grid. The proposed project would have an average annual generation of 312,206,000 kilowatt-hours (kWh), which would be sold to a local utility.

Applicant Contact: Ramya Swaminathan, Free Flow Power Corporation, 239 Causeway Street, Boston, MA 02114; phone (978) 226–1531.

FERC Contact: Michael Spencer, (202) 502–6093.

Deadline for filing comments, motions to intervene, competing applications (without notices of intent), or notices of intent to file competing applications: 60 days from the issuance of this notice. Competing applications and notices of intent must meet the requirements of 18 CFR 4.36. Comments, motions to intervene, notices of intent, and competing applications may be filed electronically via the Internet. See 18 CFR 385.2001(a)(1)(iii) and the instructions on the Commission's Web site *http://www.ferc.gov/docs-filing/efiling.asp.* Commenters can submit brief comments up to 6,000 characters, without prior registration, using the eComment system at *http://www.ferc.gov/docs-filing/ecomment.asp.* You must include your name and contact information at the end of your comments. For assistance, please contact FERC Online Support at *FERCOnlineSupport@ferc.gov* or toll free at 1–866–208–3676, or for TTY, (202) 502–8659. Although the Commission strongly encourages electronic filing, documents may also be paper-filed. To paper-file, mail an original and seven copies to: Kimberly D. Bose, Secretary, Federal Energy Regulatory Commission, 888 First Street NE., Washington, DC 20426.

More information about this project, including a copy of the application, can be viewed or printed on the ''eLibrary'' link of Commission's Web site at *http://www.ferc.gov/docs-filing/elibrary.asp.* Enter the docket number (P–13478) in the docket number field to access the document. For assistance, contact FERC Online Support.

Dated: September 27, 2012.

Kimberly D. Bose,

Secretary.

[FR Doc. 2012–24351 Filed 10–2–12; 8:45 am]

BILLING CODE 6717–01–P

DEPARTMENT OF ENERGY

Federal Energy Regulatory Commission

[Project No. 13479–001]

FFP Project 63 LLC; Notice of Preliminary Permit Application Accepted for Filing and Soliciting Comments, Motions to Intervene, and Competing Applications

On September 4, 2012, FFP Project 63, LLC filed an application for a preliminary permit, pursuant to section 4(f) of the Federal Power Act (FPA), proposing to study the feasibility of a hydropower project located on the Mississippi River, near Fort Adams, in Wilkinson County, Mississippi and Concordia Parish, Louisiana. The sole purpose of a preliminary permit, if issued, is to grant the permit holder priority to file a license application during the permit term. A preliminary permit does not authorize the permit holder to perform any land-disturbing activities or otherwise enter upon lands or waters owned by others without the owners' express permission.

The proposed Fort Adams hydrokinetic project would consist of the following: (1) Up to 1,656 SmarTurbine generating units installed in arrays on the bottom of the river; (2) the total capacity of the installation would be up to 66,240 kilowatts; (3) flexible cables would convey each arrays power to a metering station; and (4) a transmission line would interconnect with the power grid. The proposed project would have an average annual generation of 150,645,000 kilowatt-hours (kWh), which would be sold to a local utility.

Applicant Contact: Ramya Swaminathan, Free Flow Power Corporation, 239 Causeway Street, Boston, MA 02114; phone (978) 226–1531.

FERC Contact: Michael Spencer, (202) 502–6093.

Deadline for filing comments, motions to intervene, competing applications (without notices of intent), or notices of intent to file competing applications: 60 days from the issuance of this notice. Competing applications and notices of intent must meet the requirements of 18 CFR 4.36. Comments, motions to intervene, notices of intent, and competing applications may be filed electronically via the Internet. See 18 CFR 385.2001(a)(1)(iii) and the instructions on the Commission's Web site *http://www.ferc.gov/docs-filing/efiling.asp.* Commenters can submit brief comments up to 6,000 characters, without prior registration, using the eComment system at *http://www.ferc.gov/docs-filing/ecomment.asp.* You must include your name and contact information at the end of your comments. For assistance, please contact FERC Online Support at *FERCOnlineSupport@ferc.gov* or toll free at 1–866–208–3676, or for TTY, (202) 502–8659. Although the Commission strongly encourages electronic filing, documents may also be paper-filed. To paper-file, mail an original and seven copies to: Kimberly D. Bose, Secretary, Federal Energy Regulatory Commission, 888 First Street NE., Washington, DC 20426.

More information about this project, including a copy of the application, can be viewed or printed on the ''eLibrary'' link of Commission's Web site at *http://www.ferc.gov/docs-filing/elibrary.asp.* Enter the docket number (P–13479) in the docket number field to access the document. For assistance, contact FERC Online Support.

Dated: September 27, 2012.

Kimberly D. Bose,

Secretary.

[FR Doc. 2012–24353 Filed 10–2–12; 8:45 am]

BILLING CODE 6717–01–P

DEPARTMENT OF ENERGY

Federal Energy Regulatory Commission

[Project No. 13480–001]

FFP Project 69 LLC; Notice of Preliminary Permit Application Accepted for Filing and Soliciting Comments, Motions To Intervene, and Competing Applications

On September 4, 2012, FFP Project 69, LLC filed an application for a preliminary permit, pursuant to section 4(f) of the Federal Power Act (FPA), proposing to study the feasibility of a hydropower project located on the Mississippi River, near Fort Adams, in Wilkinson County, Mississippi and Concordia Parish, Louisiana. The sole purpose of a preliminary permit, if issued, is to grant the permit holder priority to file a license application during the permit term. A preliminary permit does not authorize the permit holder to perform any land-disturbing activities or otherwise enter upon lands or waters owned by others without the owners' express permission.

The proposed Breeze Point hydrokinetic project would consist of the following: (1) Up to 1,196 SmarTurbine generating units installed in arrays on the bottom of the river; (2) the total capacity of the installation would be up to 47,840 kilowatts; (3) flexible cables would convey each arrays power to a metering station; and (4) a transmission line would interconnect with the power grid. The proposed project would have an average annual generation of 108,799,000 kilowatt-hours (kWh), which would be sold to a local utility.

Applicant Contact: Ramya Swaminathan, Free Flow Power Corporation, 239 Causeway Street, Boston, MA 02114; phone (978) 226–1531.

FERC Contact: Michael Spencer, (202) 502–6093.

Deadline for filing comments, motions to intervene, competing applications (without notices of intent), or notices of intent to file competing applications: 60 days from the issuance of this notice. Competing applications and notices of intent must meet the requirements of 18 CFR 4.36. Comments, motions to intervene, notices of intent, and competing applications may be filed electronically via the Internet. See 18 CFR 385.2001(a)(1)(iii) and the instructions on the Commission's Web site *http://www.ferc.gov/docs-filing/efiling.asp.* Commenters can submit brief comments up to 6,000 characters, without prior registration, using the eComment system at *http://www.ferc.gov/docs-filing/ecomment.asp.* You must include your name and contact information at the end of your comments. For assistance, please contact FERC Online Support at *FERCOnlineSupport@ferc.gov* or toll free at 1–866–208–3676, or for TTY, (202) 502–8659. Although the Commission strongly encourages electronic filing, documents may also be paper-filed. To paper-file, mail an original and seven copies to: Kimberly D. Bose, Secretary, Federal Energy Regulatory Commission, 888 First Street NE., Washington, DC 20426.

More information about this project, including a copy of the application, can be viewed or printed on the ''eLibrary'' link of Commission's Web site at *http://www.ferc.gov/docs-filing/elibrary.asp.* Enter the docket number (P–13480) in the docket number field to access the document. For assistance, contact FERC Online Support.

Dated: September 27, 2012.

Kimberly D. Bose,

Secretary.

[FR Doc. 2012–24354 Filed 10–2–12; 8:45 am]

BILLING CODE 6717–01–P

DEPARTMENT OF ENERGY

Federal Energy Regulatory Commission

[Project No 13482–001]

FFP Project 71 LLC; Notice of Preliminary Permit Application Accepted For Filing and Soliciting Comments, Motions To Intervene, and Competing Applications

On September 4, 2012, FFP Project 71, LLC filed an application for a preliminary permit, pursuant to section 4(f) of the Federal Power Act (FPA), proposing to study the feasibility of a hydropower project located on the Mississippi River, near Chatham, in Washington County, Mississippi and Chicot County, Arkansas. The sole purpose of a preliminary permit, if issued, is to grant the permit holder priority to file a license application during the permit term. A preliminary permit does not authorize the permit holder to perform any land-disturbing activities or otherwise enter upon lands or waters owned by others without the owners' express permission.

The proposed Matthews Bend hydrokinetic project would consist of the following: (1) Up to 3,524 SmarTurbine generating units installed in arrays on the bottom of the river; (2) the total capacity of the installation would be up to 140,960 kilowatts; (3) flexible cables would convey each arrays power to a metering station; and (4) a transmission line would interconnect with the power grid. The proposed project would have an average annual generation of 320,575,000 kilowatt-hours (kWh), which would be sold to a local utility.

Applicant Contact: Ramya Swaminathan, Free Flow Power Corporation, 239 Causeway Street, Boston, MA 02114; phone (978) 226–1531.

FERC Contact: Michael Spencer, (202) 502–6093.

Deadline for filing comments, motions to intervene, competing applications (without notices of intent), or notices of intent to file competing applications: 60 days from the issuance of this notice. Competing applications and notices of intent must meet the requirements of 18 CFR 4.36. Comments, motions to intervene, notices of intent, and competing applications may be filed electronically via the Internet. See 18 CFR 385.2001(a)(1)(iii) and the instructions on the Commission's Web site *http://www.ferc.gov/docs-filing/efiling.asp.* Commenters can submit brief comments up to 6,000 characters, without prior registration, using the eComment system at *http://www.ferc.gov/docs-filing/ecomment.asp.* You must include your name and contact information at the end of your comments. For assistance, please contact FERC Online Support at *FERCOnlineSupport@ferc.gov* or toll free at 1–866–208–3676, or for TTY, (202) 502–8659. Although the Commission strongly encourages electronic filing, documents may also be paper-filed. To paper-file, mail an original and seven copies to: Kimberly D. Bose, Secretary, Federal Energy Regulatory Commission, 888 First Street NE., Washington, DC 20426.

More information about this project, including a copy of the application, can be viewed or printed on the ''eLibrary'' link of Commission's Web site at *http://www.ferc.gov/docs-filing/elibrary.asp.* Enter the docket number (P–13482) in the docket number field to access the document. For assistance, contact FERC Online Support.

Dated: September 27, 2012.

Kimberly D. Bose,

Secretary.

[FR Doc. 2012–24355 Filed 10–2–12; 8:45 am]

BILLING CODE 6717–01–P

DEPARTMENT OF ENERGY

Federal Energy Regulatory Commission

[Project No. 13483–001]

FFP Project 72 LLC; Notice of Preliminary Permit Application Accepted for Filing and Soliciting Comments, Motions To Intervene, and Competing Applications

On September 4, 2012, FFP Project 72, LLC filed an application for a preliminary permit, pursuant to section 4(f) of the Federal Power Act (FPA), proposing to study the feasibility of a hydropower project located on the Mississippi River, near Winterville, in Washington County, Mississippi and Chicot County, Arkansas. The sole purpose of a preliminary permit, if issued, is to grant the permit holder priority to file a license application during the permit term. A preliminary permit does not authorize the permit holder to perform any land-disturbing activities or otherwise enter upon lands or waters owned by others without the owners' express permission.

The proposed Miller Bend hydrokinetic project would consist of the following: (1) Up to 280 SmarTurbine generating units installed in arrays on the bottom of the river; (2) the total capacity of the installation would be up to 11,200 kilowatts; (3) flexible cables would convey each arrays power to a metering station; and (4) a transmission line would interconnect with the power grid. The proposed project would have an average annual generation of 25,471,000 kilowatt-hours (kWh), which would be sold to a local utility.

Applicant Contact: Ramya Swaminathan, Free Flow Power Corporation, 239 Causeway Street, Boston, MA 02114; phone (978) 226–1531.

FERC Contact: Michael Spencer, (202) 502–6093.

Deadline for filing comments, motions to intervene, competing applications (without notices of intent), or notices of intent to file competing applications: 60 days from the issuance of this notice. Competing applications and notices of intent must meet the requirements of 18 CFR 4.36. Comments, motions to intervene, notices of intent, and competing applications may be filed electronically via the Internet. See 18 CFR 385.2001(a)(1)(iii) and the instructions on the Commission's Web site *http://www.ferc.gov/docs-filing/efiling.asp.* Commenters can submit brief comments up to 6,000 characters, without prior registration, using the eComment system at *http://www.ferc.gov/docs-filing/ecomment.asp.* You must include your name and contact information at the end of your comments. For assistance, please contact FERC Online Support at *FERCOnlineSupport@ferc.gov* or toll free at 1–866–208–3676, or for TTY, (202) 502–8659. Although the Commission strongly encourages electronic filing, documents may also be paper-filed. To paper-file, mail an original and seven copies to: Kimberly D. Bose, Secretary, Federal Energy Regulatory Commission, 888 First Street NE., Washington, DC 20426.

More information about this project, including a copy of the application, can be viewed or printed on the ''eLibrary'' link of Commission's Web site at *http://www.ferc.gov/docs-filing/elibrary.asp.* Enter the docket number (P–13483) in the docket number field to access the document. For assistance, contact FERC Online Support.

Dated: September 27, 2012.

Kimberly D. Bose,

Secretary.

[FR Doc. 2012–24356 Filed 10–2–12; 8:45 am]

BILLING CODE 6717–01–P

DEPARTMENT OF ENERGY

Federal Energy Regulatory Commission

[Project No. 13484–001]

FFP Project 73 LLC; Notice of Preliminary Permit Application Accepted for Filing and Soliciting Comments, Motions To Intervene, and Competing Applications

On September 4, 2012, FFP Project 73, LLC filed an application for a preliminary permit, pursuant to section 4(f) of the Federal Power Act (FPA), proposing to study the feasibility of a hydropower project located on the Mississippi River, near Arkansas City, in Desha and Chicot Counties, Arkansas and Bolivar County, Mississippi. The sole purpose of a preliminary permit, if issued, is to grant the permit holder priority to file a license application during the permit term. A preliminary permit does not authorize the permit holder to perform any land-disturbing activities or otherwise enter upon lands or waters owned by others without the owners' express permission.

The proposed Georgetown Bend hydrokinetic project would consist of the following: (1) Up to 4,393 SmarTurbine generating units installed in arrays on the bottom of the river; (2) the total capacity of the installation would be up to 175,720 kilowatts; (3) flexible cables would convey each arrays power to a metering station; and (4) a transmission line would interconnect with the power grid. The proposed project would have an average annual generation of 448,841,000 kilowatt-hours (kWh), which would be sold to a local utility.

Applicant Contact: Ramya Swaminathan, Free Flow Power Corporation, 239 Causeway Street, Boston, MA 02114; phone (978) 226–1531.

FERC Contact: Michael Spencer, (202) 502–6093.

Deadline for filing comments, motions to intervene, competing applications (without notices of intent), or notices of intent to file competing applications: 60 days from the issuance of this notice. Competing applications and notices of intent must meet the requirements of 18 CFR 4.36. Comments, motions to intervene, notices of intent, and competing applications may be filed electronically via the Internet. See 18 CFR 385.2001(a)(1)(iii) and the instructions on the Commission's Web site *http://www.ferc.gov/docs-filing/efiling.asp.* Commenters can submit brief comments up to 6,000 characters, without prior registration, using the eComment system at *http://www.ferc.gov/docs-filing/ecomment.asp.* You must include your name and contact information at the end of your comments. For assistance, please contact FERC Online Support at *FERCOnlineSupport@ferc.gov* or toll free at 1–866–208–3676, or for TTY, (202) 502–8659. Although the Commission strongly encourages electronic filing, documents may also be paper-filed. To paper-file, mail an original and seven copies to: Kimberly D. Bose, Secretary, Federal Energy Regulatory Commission, 888 First Street NE., Washington, DC 20426.

More information about this project, including a copy of the application, can be viewed or printed on the ''eLibrary'' link of Commission's Web site at *http://www.ferc.gov/docs-filing/elibrary.asp.* Enter the docket number (P–13484) in the docket number field to access the document. For assistance, contact FERC Online Support.

Dated: September 27, 2012.

Kimberly D. Bose,

Secretary.

[FR Doc. 2012–24357 Filed 10–2–12; 8:45 am]

BILLING CODE 6717–01–P

DEPARTMENT OF ENERGY

Federal Energy Regulatory Commission

[Project No. 13486–001]

FFP Project 76 LLC; Notice of Preliminary Permit Application Accepted for Filing and Soliciting Comments, Motions To Intervene, and Competing Applications

On September 4, 2012, FFP Project 76, LLC filed an application for a preliminary permit, pursuant to section 4(f) of the Federal Power Act (FPA), proposing to study the feasibility of a hydropower project located on the Mississippi River, near Elaine, in Phillips County, Arkansas and Coahoma County, Mississippi. The sole purpose of a preliminary permit, if issued, is to grant the permit holder priority to file a license application during the permit term. A preliminary permit does not authorize the permit holder to perform any land-disturbing activities or otherwise enter upon lands or waters owned by others without the owners' express permission.

The proposed Burke Landing hydrokinetic project would consist of the following: (1) Up to 1,490 SmarTurbine generating units installed in arrays on the bottom of the river; (2) the total capacity of the installation would be up to 59,600 kilowatts; (3) flexible cables would convey each arrays power to a metering station; and (4) a transmission line would interconnect with the power grid. The proposed project would have an average annual generation of 135,544,000 kilowatt-hours, which would be sold to a local utility.

Applicant Contact: Ramya Swaminathan, Free Flow Power Corporation, 239 Causeway Street, Boston, MA 02114; phone (978) 226–1531.

FERC Contact: Michael Spencer, (202) 502–6093.

Deadline for filing comments, motions to intervene, competing applications (without notices of intent), or notices of intent to file competing applications: 60 days from the issuance of this notice. Competing applications and notices of intent must meet the requirements of 18 CFR 4.36. Comments, motions to intervene, notices of intent, and competing applications may be filed electronically via the Internet. See 18 CFR 385.2001(a)(1)(iii) and the instructions on the Commission's Web site *http://www.ferc.gov/docs-filing/efiling.asp.* Commenters can submit brief comments up to 6,000 characters, without prior registration, using the eComment system at *http://www.ferc.gov/docs-filing/ecomment.asp.* You must include your name and contact information at the end of your comments. For assistance, please contact FERC Online Support at *FERCOnlineSupport@ferc.gov* or toll free at 1–866–208–3676, or for TTY, (202) 502–8659. Although the Commission strongly encourages electronic filing, documents may also be paper-filed. To paper-file, mail an original and seven copies to: Kimberly D. Bose, Secretary, Federal Energy Regulatory Commission, 888 First Street NE., Washington, DC 20426.

More information about this project, including a copy of the application, can be viewed or printed on the ''eLibrary'' link of Commission's Web site at *http://www.ferc.gov/docs-filing/elibrary.asp.* Enter the docket number (P–13486) in the docket number field to access the document. For assistance, contact FERC Online Support.

Dated: September 27, 2012.

Kimberly D. Bose,

Secretary.

[FR Doc. 2012–24359 Filed 10–2–12; 8:45 am]

BILLING CODE 6717–01–P

DEPARTMENT OF ENERGY

Federal Energy Regulatory Commission

[Project No. 13471–001]

FFP Project 61 LLC; Notice of Preliminary Permit Application Accepted for Filing and Soliciting Comments, Motions To Intervene, and Competing Applications

On September 4, 2012, FFP Project 61, LLC filed an application for a preliminary permit, pursuant to section 4(f) of the Federal Power Act (FPA), proposing to study the feasibility of a hydropower project located on the Mississippi River, near Arbroth, in West Baton Rouge and East Baton Rouge Parishes, Louisiana. The sole purpose of a preliminary permit, if issued, is to grant the permit holder priority to file a license application during the permit term. A preliminary permit does not authorize the permit holder to perform any land-disturbing activities or otherwise enter upon lands or waters owned by others without the owners' express permission.

The proposed Point Menoir hydrokinetic project would consist of the following: (1) Up to 1,434 SmarTurbine generating units installed in arrays on the bottom of the river; (2) the total capacity of the installation would be up to 57,360 kilowatts; (3) flexible cables would convey each arrays power to a metering station; and (4) a transmission line would interconnect with the power grid. The proposed project would have an average annual generation of 130,450,000 kilowatt-hours (kWh), which would be sold to a local utility.

Applicant Contact: Ramya Swaminathan, Free Flow Power Corporation, 239 Causeway Street, Boston, MA 02114; phone (978) 226–1531.

FERC Contact: Michael Spencer, (202) 502–6093.

Deadline for filing comments, motions to intervene, competing applications (without notices of intent), or notices of intent to file competing applications: 60 days from the issuance of this notice. Competing applications and notices of intent must meet the requirements of 18 CFR 4.36. Comments, motions to intervene, notices of intent, and competing applications may be filed electronically via the Internet. See 18 CFR 385.2001(a)(1)(iii) and the instructions on the Commission's Web site *http://www.ferc.gov/docs-filing/efiling.asp.* Commenters can submit brief comments up to 6,000 characters, without prior registration, using the eComment system at *http://www.ferc.gov/docs-filing/ecomment.asp.* You must include your name and contact information at the end of your comments. For assistance, please contact FERC Online Support at *FERCOnlineSupport@ferc.gov* or toll free at 1–866–208–3676, or for TTY, (202) 502–8659. Although the Commission strongly encourages electronic filing, documents may also be paper-filed. To paper-file, mail an original and seven copies to: Kimberly D. Bose, Secretary, Federal Energy Regulatory Commission, 888 First Street NE., Washington, DC 20426.

More information about this project, including a copy of the application, can be viewed or printed on the ''eLibrary'' link of Commission's Web site at *http://www.ferc.gov/docs-filing/elibrary.asp.* Enter the docket number (P–13471) in the docket number field to access the document. For assistance, contact FERC Online Support.

Dated: September 27, 2012.

Kimberly D. Bose,

Secretary.

[FR Doc. 2012–24366 Filed 10–2–12; 8:45 am]

BILLING CODE 6717–01–P

DEPARTMENT OF ENERGY

Federal Energy Regulatory Commission

[Project No. 13473–001]

FFP Project 60 LLC; Notice of Preliminary Permit Application Accepted for Filing and Soliciting Comments, Motions To Intervene, and Competing Applications

On September 4, 2012, FFP Project 60, LLC filed an application for a preliminary permit, pursuant to section 4(f) of the Federal Power Act (FPA), proposing to study the feasibility of a hydropower project located on the Mississippi River, near Chamberlin, in West Baton Rouge and East Baton Rouge Parishes, Louisiana. The sole purpose of a preliminary permit, if issued, is to grant the permit holder priority to file a license application during the permit term. A preliminary permit does not authorize the permit holder to perform any land-disturbing activities or otherwise enter upon lands or waters owned by others without the owners' express permission.

The proposed Springfield Bend hydrokinetic project would consist of the following: (1) Up to 2,236 SmarTurbine generating units installed in arrays on the bottom of the river; (2) the total capacity of the installation would be up to 89,440 kilowatts; (3) flexible cables would convey each arrays power to a metering station; and (4) a transmission line would interconnect with the power grid. The proposed project would have an average annual generation of 203,407,000 kilowatt-hours (kWh), which would be sold to a local utility.

Applicant Contact: Ramya Swaminathan, Free Flow Power Corporation, 239 Causeway Street, Boston, MA 02114; phone (978) 226–1531.

FERC Contact: Michael Spencer, (202) 502–6093.

Deadline for filing comments, motions to intervene, competing applications (without notices of intent), or notices of intent to file competing applications: 60 days from the issuance of this notice. Competing applications and notices of intent must meet the requirements of 18 CFR 4.36. Comments, motions to intervene, notices of intent, and competing applications may be filed electronically via the Internet. See 18 CFR 385.2001(a)(1)(iii) and the instructions on the Commission's Web site *http://www.ferc.gov/docs-filing/efiling.asp.* Commenters can submit brief comments up to 6,000 characters, without prior registration, using the eComment system at *http://www.ferc.gov/docs-filing/ecomment.asp.* You must include your name and contact information at the end of your comments. For assistance, please contact FERC Online Support at *FERCOnlineSupport@ferc.gov* or toll free at 1–866–208–3676, or for TTY, (202) 502–8659. Although the Commission strongly encourages electronic filing, documents may also be paper-filed. To paper-file, mail an original and seven copies to: Kimberly D. Bose, Secretary, Federal Energy Regulatory Commission, 888 First Street NE., Washington, DC 20426.

More information about this project, including a copy of the application, can be viewed or printed on the ''eLibrary'' link of Commission's Web site at *http://www.ferc.gov/docs-filing/elibrary.asp.* Enter the docket number (P–13473) in the docket number field to access the document. For assistance, contact FERC Online Support.

Dated: September 27, 2012.

Kimberly D. Bose,

Secretary.

[FR Doc. 2012–24368 Filed 10–2–12; 8:45 am]

BILLING CODE 6717–01–P

DEPARTMENT OF ENERGY

Federal Energy Regulatory Commission

[Project No., 13475–001]

FFP Project 64 LLC: Notice of Preliminary Permit Application Accepted for Filing and Soliciting Comments, Motions To Intervene, and Competing Applications

On September 4, 2012, FFP Project 64, LLC filed an application for a preliminary permit, pursuant to section 4(f) of the Federal Power Act (FPA), proposing to study the feasibility of a hydropower project located on the Mississippi River, near Black Hawk, in Concordia Parish, Louisiana and Wilkinson County, Mississippi. The sole purpose of a preliminary permit, if issued, is to grant the permit holder priority to file a license application during the permit term. A preliminary permit does not authorize the permit holder to perform any land-disturbing activities or otherwise enter upon lands or waters owned by others without the owners' express permission.

The proposed Palmetto Point hydrokinetic project would consist of the following: (1) Up to 3,552 SmarTurbine generating units installed in arrays on the bottom of the river; (2) the total capacity of the installation would be up to 142,080 kilowatts; (3) flexible cables would convey each arrays power to a metering station; and (4) a transmission line would interconnect with the power grid. The proposed project would have an average annual generation of 323,122,000 kilowatt-hours (kWh), which would be sold to a local utility.

Applicant Contact: Ramya Swaminathan, Free Flow Power Corporation, 239 Causeway Street, Boston, MA 02114; phone (978) 226–1531.

FERC Contact: Michael Spencer, (202) 502–6093.

Deadline for filing comments, motions to intervene, competing applications (without notices of intent), or notices of intent to file competing applications: 60 days from the issuance of this notice. Competing applications and notices of intent must meet the requirements of 18 CFR 4.36. Comments, motions to intervene, notices of intent, and competing applications may be filed electronically via the Internet. See 18 CFR 385.2001(a)(1)(iii) and the instructions on the Commission's Web site *http://www.ferc.gov/docs-filing/efiling.asp.* Commenters can submit brief comments up to 6,000 characters, without prior registration, using the eComment system at *http://www.ferc.gov/docs-filing/ecomment.asp.* You must include your name and contact information at the end of your comments. For assistance, please contact FERC Online Support at *FERCOnlineSupport@ferc.gov* or toll free at 1–866–208–3676, or for TTY, (202) 502–8659. Although the Commission strongly encourages electronic filing, documents may also be paper-filed. To paper-file, mail an original and seven copies to: Kimberly D. Bose, Secretary, Federal Energy Regulatory Commission, 888 First Street NE., Washington, DC 20426.

More information about this project, including a copy of the application, can be viewed or printed on the ''eLibrary'' link of Commission's Web site at *http://www.ferc.gov/docs-filing/elibrary.asp.* Enter the docket number (P–13475) in the docket number field to access the document. For assistance, contact FERC Online Support.

Dated: September 27, 2012.

Kimberly D. Bose,

Secretary.

[FR Doc. 2012–24369 Filed 10–2–12; 8:45 am]

BILLING CODE 6717–01–P

DEPARTMENT OF ENERGY

Federal Energy Regulatory Commission

[Project No. 13476–001]

FFP Project 65 LLC; Notice of Preliminary Permit Application Accepted for Filing and Soliciting Comments, Motions To Intervene, and Competing Applications

On September 4, 2012, FFP Project 65, LLC filed an application for a preliminary permit, pursuant to section 4(f) of the Federal Power Act (FPA), proposing to study the feasibility of a hydropower project located on the Mississippi River, near Slocum, in Concordia Parish, Louisiana and Adams County, Mississippi. The sole purpose of a preliminary permit, if issued, is to grant the permit holder priority to file a license application during the permit term. A preliminary permit does not authorize the permit holder to perform any land-disturbing activities or otherwise enter upon lands or waters owned by others without the owners' express permission.

The proposed Jackson Point hydrokinetic project would consist of the following: (1) Up to 3,206 SmarTurbine generating units installed in arrays on the bottom of the river; (2) the total capacity of the installation would be up to 128,240 kilowatts; (3) flexible cables would convey each arrays power to a metering station; and (4) a transmission line would interconnect with the power grid. The proposed project would have an average annual generation of 291,647,000 kilowatt-hours (kWh), which would be sold to a local utility.

Applicant Contact: Ramya Swaminathan, Free Flow Power Corporation, 239 Causeway Street, Boston, MA 02114; phone (978) 226–1531.

FERC Contact: Michael Spencer, (202) 502–6093.

Deadline for filing comments, motions to intervene, competing applications (without notices of intent), or notices of intent to file competing applications: 60 days from the issuance of this notice. Competing applications and notices of intent must meet the requirements of 18 CFR 4.36. Comments, motions to intervene, notices of intent, and competing applications may be filed electronically via the Internet. See 18 CFR 385.2001(a)(1)(iii) and the instructions on the Commission's Web site *http://www.ferc.gov/docs-filing/efiling.asp.* Commenters can submit brief comments up to 6,000 characters, without prior registration, using the eComment system at *http://www.ferc.gov/docs-filing/ecomment.asp.* You must include your name and contact information at the end of your comments. For assistance, please contact FERC Online Support at *FERCOnlineSupport@ferc.gov* or toll free at 1–866–208–3676, or for TTY, (202) 502–8659. Although the Commission strongly encourages electronic filing, documents may also be paper-filed. To paper-file, mail an original and seven copies to: Kimberly D. Bose, Secretary, Federal Energy Regulatory Commission, 888 First Street NE., Washington, DC 20426.

More information about this project, including a copy of the application, can be viewed or printed on the ''eLibrary'' link of Commission's Web site at *http://www.ferc.gov/docs-filing/elibrary.asp.* Enter the docket number (P–13476) in the docket number field to access the document. For assistance, contact FERC Online Support.

Dated: September 27, 2012.

Kimberly D. Bose,

Secretary.

[FR Doc. 2012–24370 Filed 10–2–12; 8:45 am]

BILLING CODE 6717–01–P

DEPARTMENT OF ENERGY

Federal Energy Regulatory Commission

[Project No. 13488–001]

FFP Project 78 LLC; Notice of Preliminary Permit Application Accepted for Filing and Soliciting Comments, Motions To Intervene, and Competing Applications

On September 4, 2012, FFP Project 78, LLC filed an application for a preliminary permit, pursuant to section 4(f) of the Federal Power Act (FPA), proposing to study the feasibility of a hydropower project located on the Mississippi River, near Richardson, in Tipton County, Tennessee, and Mississippi County, Arkansas. The sole purpose of a preliminary permit, if issued, is to grant the permit holder priority to file a license application during the permit term. A preliminary permit does not authorize the permit holder to perform any land-disturbing activities or otherwise enter upon lands or waters owned by others without the owners' express permission.

The proposed Island 35 Bend hydrokinetic project would consist of the following: (1) Up to 1,070 SmarTurbine generating units installed in arrays on the bottom of the river; (2) the total capacity of the installation would be up to 74,960 kilowatts; (3) flexible cables would convey each arrays power to a metering station; and (4) a transmission line would interconnect with the power grid. The proposed project would have an average annual generation of 170,476,000 kilowatt-hours, which would be sold to a local utility.

Applicant Contact: Ramya Swaminathan, Free Flow Power Corporation, 239 Causeway Street, Boston, MA 02114; phone (978) 226–1531.

FERC Contact: Michael Spencer, (202) 502–6093.

Deadline for filing comments, motions to intervene, competing applications (without notices of intent), or notices of intent to file competing applications: 60 days from the issuance of this notice. Competing applications and notices of intent must meet the requirements of 18 CFR 4.36. Comments, motions to intervene, notices of intent, and competing applications may be filed electronically via the Internet. See 18 CFR 385.2001(a)(1)(iii) and the instructions on the Commission's Web site *http://www.ferc.gov/docs-filing/efiling.asp.* Commenters can submit brief comments up to 6,000 characters, without prior registration, using the eComment system at *http://www.ferc.gov/docs-filing/ecomment.asp.* You must include your name and contact information at the end of your comments. For assistance, please contact FERC Online Support at *FERCOnlineSupport@ferc.gov* or toll free at 1–866–208–3676, or for TTY, (202) 502–8659. Although the Commission strongly encourages electronic filing, documents may also be paper-filed. To paper-file, mail an original and seven copies to: Kimberly D. Bose, Secretary, Federal Energy Regulatory Commission, 888 First Street NE., Washington, DC 20426.

More information about this project, including a copy of the application, can be viewed or printed on the ''eLibrary'' link of Commission's Web site at *http://www.ferc.gov/docs-filing/elibrary.asp.* Enter the docket number (P–13488) in the docket number field to access the document. For assistance, contact FERC Online Support.

Dated: September 27, 2012.

Kimberly D. Bose,

Secretary.

[FR Doc. 2012–24347 Filed 10–2–12; 8:45 am]

BILLING CODE 6717–01–P

DEPARTMENT OF ENERGY

Federal Energy Regulatory Commission

[Project No. 13472–001]

FFP Project 62 LLC; Notice of Preliminary Permit Application Accepted for Filing and Soliciting Comments, Motions To Intervene, and Competing Applications

On September 4, 2012, FFP Project 62, LLC filed an application for a preliminary permit, pursuant to section 4(f) of the Federal Power Act (FPA), proposing to study the feasibility of a hydropower project located on the Mississippi River, near Tunica, in Pointe Coupee and West Feliciana Parishes, Louisiana. The sole purpose of a preliminary permit, if issued, is to grant the permit holder priority to file a license application during the permit term. A preliminary permit does not authorize the permit holder to perform any land-disturbing activities or otherwise enter upon lands or waters owned by others without the owners' express permission.

The proposed Raccourci Island hydrokinetic project would consist of the following: (1) Up to 1,038 SmarTurbine generating units installed in arrays on the bottom of the river; (2) the total capacity of the installation would be up to 41,520 kilowatts; (3) flexible cables would convey each arrays power to a metering station; and (4) a transmission line would interconnect with the power grid. The proposed project would have an average annual generation of 94,426,000 kilowatt-hours (kWh), which would be sold to a local utility.

Applicant Contact: Ramya Swaminathan, Free Flow Power Corporation, 239 Causeway Street, Boston, MA 02114; phone (978) 226–1531.

FERC Contact: Michael Spencer, (202) 502–6093.

Deadline for filing comments, motions to intervene, competing applications (without notices of intent), or notices of intent to file competing applications: 60 days from the issuance of this notice. Competing applications and notices of intent must meet the requirements of 18 CFR 4.36. Comments, motions to intervene, notices of intent, and competing applications may be filed electronically via the Internet. See 18 CFR 385.2001(a)(1)(iii) and the instructions on the Commission's Web site *http://www.ferc.gov/docs-filing/efiling.asp.* Commenters can submit brief comments up to 6,000 characters, without prior registration, using the eComment system at *http://www.ferc.gov/docs-filing/ecomment.asp.* You must include your name and contact information at the end of your comments. For assistance, please contact FERC Online Support at *FERCOnlineSupport@ferc.gov* or toll free at 1–866–208–3676, or for TTY, (202) 502–8659. Although the Commission strongly encourages electronic filing, documents may also be paper-filed. To paper-file, mail an original and seven copies to: Kimberly D. Bose, Secretary, Federal Energy Regulatory Commission, 888 First Street NE., Washington, DC 20426.

More information about this project, including a copy of the application, can be viewed or printed on the ''eLibrary'' link of Commission's Web site at *http://www.ferc.gov/docs-filing/elibrary.asp.* Enter the docket number (P–13472) in the docket number field to access the document. For assistance, contact FERC Online Support.

Dated: September 27, 2012.

Kimberly D. Bose,

Secretary.

[FR Doc. 2012–24367 Filed 10–2–12; 8:45 am]

BILLING CODE 6717–01–P

DEPARTMENT OF ENERGY

Federal Energy Regulatory Commission

[Project No. 13489–001]

FFP Project 79 LLC; Notice of Preliminary Permit Application Accepted for Filing and Soliciting Comments, Motions To Intervene, and Competing Applications

On September 4, 2012, FFP Project 79, LLC filed an application for a preliminary permit, pursuant to section 4(f) of the Federal Power Act (FPA), proposing to study the feasibility of a hydropower project located on the Mississippi River, near Tomato, in Mississippi County, Arkansas, and Lauderdale County, Tennessee. The sole purpose of a preliminary permit, if issued, is to grant the permit holder priority to file a license application during the permit term. A preliminary permit does not authorize the permit holder to perform any land-disturbing activities or otherwise enter upon lands or waters owned by others without the owners' express permission.

The proposed Barfield Point hydrokinetic project would consist of the following: (1) Up to 1,898 SmarTurbine generating units installed in arrays on the bottom of the river; (2) the total capacity of the installation would be up to 75,920 kilowatts; (3) flexible cables would convey each arrays power to a metering station; and (4) a transmission line would interconnect with the power grid. The proposed project would have an average annual generation of 172,659,000 kilowatt-hours, which would be sold to a local utility.

Applicant Contact: Ramya Swaminathan, Free Flow Power Corporation, 239 Causeway Street, Boston, MA 02114; phone (978) 226–1531.

FERC Contact: Michael Spencer, (202) 502–6093.

Deadline for filing comments, motions to intervene, competing applications (without notices of intent), or notices of intent to file competing applications: 60 days from the issuance of this notice. Competing applications and notices of intent must meet the requirements of 18 CFR 4.36. Comments, motions to intervene, notices of intent, and competing applications may be filed electronically via the Internet. See 18 CFR 385.2001(a)(1)(iii) and the instructions on the Commission's Web site *http://www.ferc.gov/docs-filing/efiling.asp.* Commenters can submit brief comments up to 6,000 characters, without prior registration, using the eComment system at *http://www.ferc.gov/docs-filing/ecomment.asp.* You must include your name and contact information at the end of your comments. For assistance, please contact FERC Online Support at *FERCOnlineSupport@ferc.gov* or toll free at 1–866–208–3676, or for TTY, (202) 502–8659. Although the Commission strongly encourages electronic filing, documents may also be paper-filed. To paper-file, mail an original and seven copies to: Kimberly D. Bose, Secretary, Federal Energy Regulatory Commission, 888 First Street NE., Washington, DC 20426.

More information about this project, including a copy of the application, can be viewed or printed on the ''eLibrary'' link of Commission's Web site at *http://www.ferc.gov/docs-filing/elibrary.asp.* Enter the docket number (P–13489) in the docket number field to access the document. For assistance, contact FERC Online Support.

Dated: September 27, 2012.

Kimberly D. Bose,

Secretary.

[FR Doc. 2012–24348 Filed 10–2–12; 8:45 am]

BILLING CODE 6717–01–P

DEPARTMENT OF ENERGY

Federal Energy Regulatory Commission

[Project No. 13485–001]

FFP Project 75 LLC; Notice of Preliminary Permit Application Accepted for Filing and Soliciting Comments, Motions To Intervene, and Competing Applications

On September 4, 2012, FFP Project 75, LLC filed an application for a preliminary permit, pursuant to section 4(f) of the Federal Power Act (FPA), proposing to study the feasibility of a hydropower project located on the Mississippi River, near Wabash, in Phillips County, Arkansas and Coahoma County, Mississippi. The sole purpose of a preliminary permit, if issued, is to grant the permit holder priority to file a license application during the permit term. A preliminary permit does not authorize the permit holder to perform any land-disturbing activities or otherwise enter upon lands or waters owned by others without the owners' express permission.

The proposed Old Town Bend hydrokinetic project would consist of the following: (1) Up to 1,090 SmarTurbine generating units installed in arrays on the bottom of the river; (2) the total capacity of the installation would be up to 43,600 kilowatts; (3) flexible cables would convey each arrays power to a metering station; and (4) a transmission line would interconnect with the power grid. The proposed project would have an average annual generation of 99,156,000 kilowatt-hours, which would be sold to a local utility.

Applicant Contact: Ramya Swaminathan, Free Flow Power Corporation, 239 Causeway Street, Boston, MA 02114; phone (978) 226–1531.

FERC Contact: Michael Spencer, (202) 502–6093.

Deadline for filing comments, motions to intervene, competing applications (without notices of intent), or notices of intent to file competing applications: 60 days from the issuance of this notice. Competing applications and notices of intent must meet the requirements of 18 CFR 4.36. Comments, motions to intervene, notices of intent, and competing applications may be filed electronically via the Internet. See 18 CFR 385.2001(a)(1)(iii) and the instructions on the Commission's Web site *http://www.ferc.gov/docs-filing/efiling.asp.* Commenters can submit brief comments up to 6,000 characters, without prior registration, using the eComment system at *http://www.ferc.gov/docs-filing/ecomment.asp.* You must include your name and contact information at the end of your comments. For assistance, please contact FERC Online Support at *FERCOnlineSupport@ferc.gov* or toll free at 1–866–208–3676, or for TTY, (202) 502–8659. Although the Commission strongly encourages electronic filing, documents may also be paper-filed. To paper-file, mail an original and seven copies to: Kimberly D. Bose, Secretary, Federal Energy Regulatory Commission, 888 First Street NE., Washington, DC 20426.

More information about this project, including a copy of the application, can be viewed or printed on the ''eLibrary'' link of Commission's Web site at *http://www.ferc.gov/docs-filing/elibrary.asp.* Enter the docket number (P–13485) in the docket number field to access the document. For assistance, contact FERC Online Support.

Dated: September 27, 2012.

Kimberly D. Bose,

Secretary.

[FR Doc. 2012–24358 Filed 10–2–12; 8:45 am]

BILLING CODE 6717–01–P

DEPARTMENT OF ENERGY

Federal Energy Regulatory Commission

[Project No. 14395–000]

Natural Currents Energy Services, LLC; Notice of Preliminary Permit Application Accepted for Filing and Soliciting Comments, Motions To Intervene, and Competing Applications

On April 24, 2012, Natural Currents Energy Services, LLC filed an application, pursuant to section 4(f) of the Federal Power Act, proposing to study the feasibility of the Fisher's Island Tidal Energy Project, which would be located on the Long Island Sound in Suffolk County, New York. The proposed project would not use a dam or impoundment. The sole purpose of a preliminary permit, if issued, is to grant the permit holder priority to file a license application during the permit term. A preliminary permit does not authorize the permit holder to perform any land-disturbing activities or otherwise enter upon lands or waters owned by others without the owners' express permission.

The proposed project would consist of: (1) Installation of 50 NC Sea Dragon tidal turbines at a rated capacity of 100 kilowatts, (2) an estimated 12.6 kilometers in length of additional transmission infrastructure, and (3) appurtenant facilities. Initial estimated production would be a minimum of 17,520 megawatt hours per year with the installation of 50 units.

Applicant Contact: Mr. Roger Bason, Natural Currents Energy Services, LLC, 24 Roxanne Boulevard, Highland, New York 12561, (845) 691–4009.

FERC Contact: Woohee Choi (202) 502–6336.

Deadline for filing comments, motions to intervene, competing applications (without notices of intent), or notices of intent to file competing applications: 60 days from the issuance of this notice.[1] Competing applications and notices of intent must meet the requirements of 18 CFR 4.36. Comments, motions to intervene, notices of intent, and competing applications may be filed electronically via the Internet. See 18 CFR 385.2001(a)(1)(iii) and the instructions on the Commission's Web site *http://www.ferc.gov/docs-filing/efiling.asp.* Commenters can submit brief comments up to 6,000 characters, without prior registration, using the eComment system at *http://www.ferc.gov/docs-filing/ecomment.asp.* You must include your name and contact information at the end of your comments. For assistance, please contact FERC Online Support at *FERCOnlineSupport@ferc.gov* or toll free at 1–866–208–3676, or for TTY, (202) 502–8659. Although the Commission strongly encourages electronic filing, documents may also be paper-filed. To paper-file, mail an original and seven copies to: Kimberly D. Bose, Secretary, Federal Energy Regulatory Commission, 888 First Street NE., Washington, DC 20426.

More information about this project, including a copy of the application, can be viewed or printed on the ''eLibrary'' link of the Commission's Web site at *http://www.ferc.gov/docs-filing/elibrary.asp.* Enter the docket number (P–14395) in the docket number field to access the document. For assistance, contact FERC Online Support.

Dated: September 27, 2012.

Kimberly D. Bose,

Secretary.

[FR Doc. 2012–24373 Filed 10–2–12; 8:45 am]

BILLING CODE 6717–01–P

[1] The Commission is issuing a second notice for this project because some municipalities may not have been notified by the first notice issued on June 27, 2012.

DEPARTMENT OF ENERGY

Federal Energy Regulatory Commission

[Project No. 13487–001]

FFP Project 77 LLC; Notice of Preliminary Permit Application Accepted for Filing and Soliciting Comments, Motions To Intervene, and Competing Applications

On September 4, 2012, FFP Project 77, LLC filed an application for a preliminary permit, pursuant to section 4(f) of the Federal Power Act (FPA), proposing to study the feasibility of a hydropower project located on the Mississippi River, near Anthonyville, in Crittenden County, Arkansas, Desoto County, Mississippi and Shelby County, Tennessee. The sole purpose of a preliminary permit, if issued, is to grant the permit holder priority to file a license application during the permit term. A preliminary permit does not authorize the permit holder to perform any land-disturbing activities or otherwise enter upon lands or waters owned by others without the owners' express permission.

The proposed Cow Island hydrokinetic project would consist of the following: (1) Up to 1,070 SmarTurbine generating units installed in arrays on the bottom of the river; (2) the total capacity of the installation would be up to 42,800 kilowatts; (3) flexible cables would convey each arrays power to a metering station; and (4) a transmission line would interconnect with the power grid. The proposed project would have an average annual generation of 97,337,000 kilowatt-hours, which would be sold to a local utility.

Applicant Contact: Ramya Swaminathan, Free Flow Power Corporation, 239 Causeway Street, Boston, MA 02114; phone (978) 226–1531.

FERC Contact: Michael Spencer, (202) 502–6093.

Deadline for filing comments, motions to intervene, competing applications (without notices of intent), or notices of intent to file competing applications: 60 days from the issuance of this notice. Competing applications and notices of intent must meet the requirements of 18 CFR 4.36. Comments, motions to intervene, notices of intent, and competing applications may be filed electronically via the Internet. See 18 CFR 385.2001(a)(1)(iii) and the instructions on the Commission's Web site *http://www.ferc.gov/docs-filing/efiling.asp.* Commenters can submit brief comments up to 6,000 characters, without prior registration, using the eComment system at *http://www.ferc.gov/docs-filing/ecomment.asp.* You must include your name and contact information at the end of your comments. For assistance, please contact FERC Online Support at *FERCOnlineSupport@ferc.gov* or toll free at 1–866–208–3676, or for TTY, (202) 502–8659. Although the Commission strongly encourages electronic filing, documents may also be paper-filed. To paper-file, mail an original and seven copies to: Kimberly D. Bose, Secretary, Federal Energy Regulatory Commission, 888 First Street NE., Washington, DC 20426.

More information about this project, including a copy of the application, can be viewed or printed on the ''eLibrary'' link of Commission's Web site at *http://www.ferc.gov/docs-filing/elibrary.asp.* Enter the docket number (P–13487) in the docket number field to access the document. For assistance, contact FERC Online Support.

Dated: September 27, 2012.

Kimberly D. Bose,

Secretary.

[FR Doc. 2012–24360 Filed 10–2–12; 8:45 am]

BILLING CODE 6717–01–P

DEPARTMENT OF ENERGY

Federal Energy Regulatory Commission

[Docket No. OR12–29–000]

Brigham Oil & Gas, L.P.; Notice for Temporary Waiver of Filing and Reporting Requirements

Take notice that on September 21, 2012, pursuant to Rule 204 of the Commission's Rules of Practice and Procedure, 18 CFR 385.204 (2012), Brigham Oil & Gas, L.P., (Brigham Oil & Gas) requested that the Commission grant a temporary waiver of the Interstate Commerce Act (ICA) section 6 and section 20 tariff filing and reporting requirements applicable to interstate common carrier pipelines. Brigham Oil & Gas requested review on an expedited basis and that a Commission order granting the temporary waiver be issued no later than November 1, 2012. Brigham Oil & Gas stated that they are developing three crude oil gathering systems in North Dakota, the Williams System, the McKenzie System, and the Ross System, and that a portion of the Williams System is operationally available. Brigham Oil & Gas stated that their circumstances fit the criteria the Commission has used in granting such waivers, and that there is no public interest basis to deny the request.

Any person desiring to intervene or to protest in this proceedings must file in accordance with Rules 211 and 214 of the Commission's Rules of Practice and Procedure (18 CFR 385.211 and 385.214) on or before 5 p.m. Eastern time on the specified comment date. Protests will be considered by the Commission in determining the appropriate action to be taken, but will not serve to make protestants parties to the proceeding. Anyone filing a motion to intervene or protest must serve a copy of that document on the Applicant. In reference to filings initiating a new proceeding, interventions or protests submitted on or before the comment deadline need not be served on persons other than the Applicant.

The Commission encourages electronic submission of protests and interventions in lieu of paper, using the FERC Online links at *http://www.ferc.gov.* To facilitate electronic service, persons with Internet access who will eFile a document and/or be listed as a contact for an intervenor must create and validate an eRegistration account using the eRegistration link. Select the eFiling link to log on and submit the intervention or protests.

Persons unable to file electronically should submit an original and 14 copies of the intervention or protest to the Federal Energy Regulatory Commission, 888 First St. NE., Washington, DC 20426.

The filings in the above proceedings are accessible in the Commission's eLibrary system by clicking on the appropriate link in the above list. They are also available for review in the Commission's Public Reference Room in Washington, DC. There is an eSubscription link on the web site that enables subscribers to receive email notification when a document is added to a subscribed docket(s). For assistance with any FERC Online service, please email *FERCOnlineSupport@ferc.gov.* or call (866) 208–3676 (toll free). For TTY, call (202) 502–8659.

Comment Date: 5 p.m. Eastern time on Monday, October 15, 2012.

Dated: September 27, 2012.

Kimberly D. Bose,

Secretary.

[FR Doc. 2012–24362 Filed 10–2–12; 8:45 am]

BILLING CODE 6717–01–P

ENVIRONMENTAL PROTECTION AGENCY

[FRL–9736–3]

Meeting of the Mobile Sources Technical Review Subcommittee

AGENCY: Environmental Protection Agency (EPA).

ACTION: Notice.

SUMMARY: Pursuant to the Federal Advisory Committee Act, Public Law 92–463, notice is hereby given that the Mobile Sources Technical Review Subcommittee (MSTRS) will meet on December 13, 2012. The MSTRS is a subcommittee under the Clean Air Act Advisory Committee. This is an open meeting. The meeting will include discussion of current topics and presentations about activities being conducted by EPA's Office of Transportation and Air Quality. The preliminary agenda for the meeting and any notices about change in venue will be posted on the Subcommittee's Web site: *http://www.epa.gov/air/caaac/mobile_sources.html.* MSTRS listserver subscribers will receive notification when the agenda is available on the Subcommittee Web site. To subscribe to the MSTRS listserver, send a blank email to *lists-mstrs@lists.epa.gov.*

DATES: Thursday, December 13, 2012 from 9:00 a.m. to 4:30 p.m. Registration begins at 8:30 a.m.

ADDRESSES: The meeting is currently scheduled to be held at The Madison Hotel at 1177 15th St. NW., Washington, DC 20005. However, this date and location are subject to change and interested parties should monitor the Subcommittee Web site (above) for the latest logistical information. The hotel is located five blocks from the McPherson Square Metro Station.

FOR FURTHER INFORMATION CONTACT: *For technical information:* Jennifer Krueger, Designated Federal Officer, Transportation and Climate Division, Mailcode 6405J, U.S. EPA, 1200 Pennsylvania Ave. NW., Washington, DC 20460; Ph: 202–343–9302; email: *Krueger.jennifer@epa.gov.*

For logistical and administrative information: Ms. Cheryl Jackson, U.S. EPA, Transportation and Climate Division, Mailcode 6405J, U.S. EPA, 1200 Pennsylvania Ave. NW., Washington, DC 20460; 202–343–9653; email: *jackson.cheryl@epa.gov.*

Background on the work of the Subcommittee is available at: *http://www.epa.gov/air/caaac/mobile_sources.html.* Individuals or organizations wishing to provide comments to the Subcommittee should submit them to Ms. Krueger at the address above by November 30, 2012. The Subcommittee expects that public statements presented at its meetings will not be repetitive of previously submitted oral or written statements.

Supplementary: During the meeting, the Subcommittee may also hear progress reports from some of its workgroups as well as updates and announcements on activities of general interest to attendees.

For Individuals with Disabilities: For information on access or services for individuals with disabilities, please contact Ms. Krueger or Ms. Jackson (see above). To request accommodation of a disability, please contact Ms. Krueger or Ms. Jackson, preferably at least 10 days prior to the meeting, to give EPA as much time as possible to process your request.

Dated: September 26, 2012.

Margo Tsirigotis Oge,

Director, Office of Transportation and Air Quality.

[FR Doc. 2012–24378 Filed 10–2–12; 8:45 am]

BILLING CODE 6560–50–P

ENVIRONMENTAL PROTECTION AGENCY

[FRL–9737–3]

Farm, Ranch, and Rural Communities Committee

AGENCY: Environmental Protection Agency (EPA).

ACTION: Notice of meeting.

SUMMARY: Under the Federal Advisory Committee Act, Public Law 92–463, EPA gives notice of a teleconference meeting of the Farm, Ranch, and Rural Communities Committee (FRRCC). The FRRCC is a policy-oriented committee that provides policy advice, information, and recommendations to the EPA Administrator on a range of environmental issues and policies that are of importance to agriculture and rural communities.

The purpose of this teleconference is to discuss specific topics of relevance for consideration by the Committee in order to provide advice and insights to the Agency on environmental policies and programs that affect and engage agriculture and rural communities.

DATES: Monday, October 22, 2012, from 12 p.m. until 2 p.m. Eastern Daylight Time.

FOR FURTHER INFORMATION CONTACT: Alicia Kaiser, Designated Federal Officer, *kaiser.alicia@epa.gov,* 202–564–7273, US EPA, Office of the Administrator (1101A), 1200 Pennsylvania Avenue NW., Washington, DC 20460.

SUPPLEMENTARY INFORMATION: Members of the public wishing to gain access to the teleconference, make brief oral comments, or provide a written statement to the FRRCC must contact Alicia Kaiser, Designated Federal Officer, at *kaiser.alicia@epa.gov* or 202–564–7273 by October 15, 2012.

Meeting Access: For information on access or services for individuals with disabilities or to request accommodations please contact Alicia Kaiser at *kaiser.alicia@epa.gov* or 202–564–7273, preferably at least 10 days prior to the meeting, to give EPA as much time as possible to process your request.

Dated: September 19, 2012.

Alicia Kaiser,

Designated Federal Officer.

[FR Doc. 2012–24338 Filed 10–2–12; 8:45 am]

BILLING CODE 6560–50–P

ENVIRONMENTAL PROTECTION AGENCY

[EPA–HQ–OPP–2009–0878; FRL–9364–4]

Agrobacterium radiobacter strains K84/Kerr-84 and K1026; Notice of Availability

AGENCY: Environmental Protection Agency (EPA).

ACTION: Notice.

SUMMARY: This notice announces the availability of EPA's final registration review decision for the pesticide *Agrobacterium radiobacter* strains K84/Kerr-84 and K1026, case 4101. Registration review is EPA's periodic review of pesticide registrations to ensure that each pesticide continues to satisfy the statutory standard for registration, that is, that the pesticide can perform its intended function without causing unreasonable adverse effects on human health or the environment. Through this program, EPA is ensuring that each pesticide's registration is based on current scientific and other knowledge, including its effects on human health and the environment.

FOR FURTHER INFORMATION CONTACT:

For pesticide specific information, contact: Ann Sibold, Biopesticides and Pollution Prevention Division (7511P), Office of Pesticide Programs, Environmental Protection Agency, 1200 Pennsylvania Ave. NW., Washington, DC 20460–0001; telephone number: (703) 305–6502; fax number: (703) 308–7026; email address: *sibold.ann@epa.gov*.

For general information on the registration review program, contact: Kevin Costello, Pesticide Re-evaluation Division (7508P), Office of Pesticide Programs, Environmental Protection Agency, 1200 Pennsylvania Ave. NW., Washington, DC 20460–0001; telephone number: (703) 305–5026; fax number: (703) 308–8090; email address: *costello.kevin@epa.gov*.

SUPPLEMENTARY INFORMATION:

I. General Information

A. Does this action apply to me?

This action is directed to the public in general, and may be of interest to a wide range of stakeholders including environmental, human health, farm worker, and agricultural advocates; the chemical industry; pesticide users; and members of the public interested in the sale, distribution, or use of pesticides. Since others also may be interested, the Agency has not attempted to describe all the specific entities that may be affected by this action. If you have any questions regarding the applicability of this action to a particular entity, consult the pesticide specific contact person listed under **FOR FURTHER INFORMATION CONTACT**.

B. How can I get copies of this document and other related information?

The docket for this action, identified by docket identification (ID) number EPA–HQ–OPP–2009–0878, is available at *http://www.regulations.gov* or at the Office of Pesticide Programs Regulatory Public Docket (OPP Docket) in the Environmental Protection Agency Docket Center (EPA/DC), EPA West Bldg., Rm. 3334, 1301 Constitution Ave. NW., Washington, DC 20460–0001. The Public Reading Room is open from 8:30 a.m. to 4:30 p.m., Monday through Friday, excluding legal holidays. The telephone number for the Public Reading Room is (202) 566–1744, and the telephone number for the OPP Docket is (703) 305–5805. Please review the visitor instructions and additional information about the docket available at *http://www.epa.gov/dockets*.

II. Background

A. What action is the agency taking?

In accordance with 40 CFR 155.58(c), this notice announces the availability of EPA's final registration review decision for *Agrobacterium radiobacter* strains K84/Kerr-84 and K1026, case 4101. When used as a microbial pest control agent in seed, root, and stem treatments of nonbearing fruit, nut, and ornamental plants, *Agrobacterium radiobacter* is intended to protect treated plants from Crown Gall, which is caused by the plant pathogen, *Agrobacterium tumefaciens.* Both strains of *Agrobacterium radiobacter* control *Agrobacterium tumefaciens* through direct competition, which is primarily accomplished by the production of agrocin 84, a bacteriocin produced by both *Agrobacterium radiobacter* strain K84 and strain K1026 that is specific for certain pathogenic strains of *Agrobacterium* spp. Bacteriocins are peptides that are produced by certain bacteria, and are known to inhibit the growth of other bacteria.

In accordance with 40 CFR 155.57, a registration review decision is the Agency's determination whether a pesticide meets, or does not meet, the standard for registration in FIFRA. EPA has considered *Agrobacterium radiobacter* strains K84/Kerr-84 and K1026 in light of the FIFRA standard for registration. The *Agrobacterium radiobacter* strains K84/Kerr-84 and K1026 Final Decision document in the docket describes the Agency's rationale for issuing a registration review final decision for this pesticide.

In addition to the final registration review decision document, the registration review docket for *Agrobacterium radiobacter* strains K84/Kerr-84 and K1026 also includes other relevant documents related to the registration review of this case. The proposed registration review decision was posted to the docket and the public was invited to submit any comments or

new information. During the 60-day comment period, no public comments were received.

In accordance with 40 CFR 155.58(c), the registration review case docket for *Agrobacterium radiobacter* strains K84/Kerr-84 and K1026 will remain open until all actions required in the final decision have been completed.

Background on the registration review program is provided at: *http://www.epa.gov/oppsrrd1/registration_review*. Links to earlier documents related to the registration review of this pesticide are provided at: *http://www.epa.gov/oppsrrd1/registration_review/agrobacterium_radiobacter/index.html.*

B. What is the Agency's authority for taking this action?

Section 3(g) of FIFRA and 40 CFR part 155, subpart C, provide authority for this action.

List of Subjects

Environmental protection, Registration review, Pesticides and pests.

Dated: September 25, 2012.

Keith A. Matthews,

Director, Biopesticides and Pollution Prevention Division, Office of Pesticide Programs.

[FR Doc. 2012–24216 Filed 10–2–12; 8:45 am]

BILLING CODE 6560–50–P

FEDERAL COMMUNICATIONS COMMISSION

Information Collection Being Reviewed by the Federal Communications Commission Under Delegated Authority

AGENCY: Federal Communications Commission.

ACTION: Notice and request for comments.

SUMMARY: The Federal Communications Commission (FCC), as part of its continuing effort to reduce paperwork burdens, invites the general public and other Federal agencies to take this opportunity to comment on the following information collection, as required by the Paperwork Reduction Act (PRA) of 1995. Comments are requested concerning whether the proposed collection of information is necessary for the proper performance of the functions of the Commission, including whether the information shall have practical utility; the accuracy of the Commission's burden estimate; ways to enhance the quality, utility, and clarity of the information collected; ways to minimize the burden of the collection of information on the respondents, including the use of automated collection techniques or other forms of information technology; and ways to further reduce the information collection burden on small business concerns with fewer than 25 employees. The FCC may not conduct or sponsor a collection of information unless it displays a currently valid control number. No person shall be subject to any penalty for failing to comply with a collection of information subject to the PRA that does not display a valid Office of Management and Budget (OMB) control number.

DATES: Written PRA comments should be submitted on or before December 3, 2012. If you anticipate that you will be submitting comments, but find it difficult to do so within the period of time allowed by this notice, you should advise the contact listed below as soon as possible.

ADDRESSES: Direct all PRA comments to the Federal Communications Commission via email to *PRA@fcc.gov* and *Cathy.Williams@fcc.gov*.

FOR FURTHER INFORMATION CONTACT: For additional information about the information collection, contact Cathy Williams at (202) 418–2918.

SUPPLEMENTARY INFORMATION:

OMB Control Number: 3060–1033.

Title: Multi-Channel Video Program Distributor EEO Program Annual Report, FCC Form 396–C.

Form Number: FCC Form 396–C.

Type of Review: Extension of a currently approved collection.

Respondents: Business or other for-profit entities; Not-for-profit institutions.

Number of Respondents and Responses: 2,200 respondents and 2,620 responses.

Frequency of Response: Recordkeeping requirement; Once every five year reporting requirement; Annual reporting requirement.

Estimated Time per Response: 10 minutes—2.5 hours.

Total Annual Burden: 3,187 hours.

Total Annual Cost to Respondents: None.

Obligation to Respond: Required to obtain or retain benefits. The statutory authority is contained in Sections 154(i), 303 and 634 of the Communications Act of 1934, as amended.

Nature and Extent of Confidentiality: There is no assurance of confidentiality provided to respondents.

Privacy Impact Assessment: No impact(s).

Needs and Uses: The FCC Form 396–C is a collection device used to assess compliance with the Equal Employment Opportunity (EEO) program requirements by Multi-channel Video programming Distributors (''MPVDs''). It is publicly filed to allow interested parties to monitor a ''MPVD's'' compliance with the Commission's EEO requirements. All ''MVPDs'' must file annually an EEO report in their public file detailing various facts concerning their outreach efforts during the preceding year and the results of those efforts. ''MVPDs'' will be required to file their EEO public file report for the preceding year as part of the in-depth ''MVPD'' investigation conducted once every five years.

Federal Communications Commission.

Bulah P. Wheeler,

Associate Secretary, Office of the Secretary, Office of Managing Director.

[FR Doc. 2012–24403 Filed 10–2–12; 8:45 am]

BILLING CODE 6712–01–P

FEDERAL COMMUNICATIONS COMMISSION

Information Collection Being Submitted for Review and Approval to the Office of Management and Budget

AGENCY: Federal Communications Commission.

ACTION: Notice; request for comments.

SUMMARY: As part of its continuing effort to reduce paperwork burden and as required by the Paperwork Reduction Act (PRA) of 1995 (44 U.S.C. 3502 -3520), the Federal Communications Commission invites the general public and other Federal agencies to take this opportunity to comment on the following information collection(s). Comments are requested concerning: Whether the proposed collection of information is necessary for the proper performance of the functions of the Commission, including whether the information shall have practical utility; the accuracy of the Commission's burden estimates; ways to enhance the quality, utility, and clarity of the information collected; ways to minimize the burden of the collection of information on the respondents, including the use of automated collection techniques or other forms of information technology; and ways to further reduce the information collection burden on small business concerns with fewer than 25 employees.

The FCC may not conduct or sponsor a collection of information unless it displays a currently valid OMB control number. No person shall be subject to any penalty for failing to comply with a collection of information subject to the

Paperwork Reduction Act (PRA) that does not display a valid OMB control number.

DATES: Written Paperwork Reduction Act (PRA) comments should be submitted on or before November 2, 2012. If you anticipate that you will be submitting PRA comments, but find it difficult to do so within the period of time allowed by this notice, you should advise the FCC contact listed below as soon as possible.

ADDRESSES: Submit your PRA comments to Nicholas A. Fraser, Office of Management and Budget (OMB), via fax at 202–395–5167 or via Internet at *Nicholas_A._Fraser@omb.eop.gov* and to Judith B. Herman, Federal Communications Commission, via the Internet at *Judith-b.herman@fcc.gov.* To submit your PRA comments by email send them to: *PRA@fcc.gov.*

FOR FURTHER INFORMATION CONTACT: Judith B. Herman, Office of Managing Director, FCC, at 202–418–0214.

SUPPLEMENTARY INFORMATION:

OMB Control Number: 3060–0999.

Title: Hearing Aid Compatibility Status Report and Section 20.19, Hearing Aid-Compatible Mobile Handsets (Hearing Aid-Compatibility Act).

Form Number: FCC Form 655.

Type of Review: Revision of a currently approved collection.

Respondents: Business or other for-profit entities.

Number of Respondents: 925 respondents; 925 responses.

Estimated Time per Response: 13.041081 hours.

Frequency of Response: On occasion and annual reporting requirements and third party disclosure requirements.

Obligation to Respond: Required to obtain or retain benefits. Statutory authority for this information collection is contained in 47 U.S.C. 151, 154(i), 157, 160, 201, 202, 208, 214, 301, 303, 308, 309(j), 310 and 610 of the Communications Act of 1934, as amended.

Total Annual Burden: 12,063 hours.

Total Annual Cost: N/A.

Privacy Impact Assessment: N/A.

Nature and Extent of Confidentiality: Information requested in the reports may include confidential information. However, covered entities are allowed to request that such materials submitted to the Commission be withheld from public inspection under 47 CFR 0.459 of the Commission's rules.

Needs and Uses: The Commission is now submitting this collection to the Office of Management and Budget (OMB) for approval of a revision of this information collection. The Commission's previous burden estimates have not changed.

On April 9, 2012, the Commission adopted final rules in a Third Report and Order, DA12–550, which adopts the 2011 revision of the hearing aid compatibility technical standard (ANSI Standard) as an applicable technical standard alongside the 2007 version that is already in the Commission's rules.

Under the 2011 ANSI Standard, the Commission tailored its existing disclosure requirements to address new situations that may arise. Specifically, the Commission adopted a requirement to inform users about any operations in handsets that a manufacturer may have tested under the 2011 version of the ANSI Standard and found not to meet hearing aid compatibility criteria for those operations. The Commission also adopted a requirement to make disclosure about any handsets that have not been tested for the inductive coupling capability of Voice over Long Term Evolution (VoLTE) transmissions.

The Commission is now modifying the FCC Form 655 to collect information that is relevant to the newly effective provisions of the rule and to clarify and streamline existing fields. See the 60 day notice published in the **Federal Register** on July 30, 2012 (77 FR 444614) for the specific changes made to the form.

Federal Communications Commission.

Bulah P. Wheeler,

Associate Secretary, Office of the Secretary, Office of Managing Director.

[FR Doc. 2012–24407 Filed 10–2–12; 8:45 am]

BILLING CODE 6712–01–P

FEDERAL ELECTION COMMISSION

Sunshine Act Notice

AGENCY: Federal Election Commission.

Federal Register Citation of Previous Announcement—77 FR 59924 (October 1, 2012)

DATE AND TIME: *Thursday, October 4, 2012 At 10 a.m.*

PLACE: 999 E Street NW., Washington, DC (Ninth Floor).

STATUS: This Meeting Will Be Open to the Public.

CHANGES IN THE MEETING—The following items have been added to the agenda:

Draft Advisory Opinion 2012–32: Tea Party Leadership Fund, Mr. John Raese and Mr. Sean Bielat.

Consideration of the U.S. District Court for the District of Columbia (September 20, 2012) Order in *Van Hollen* v. *FEC.*

Individuals who plan to attend and require special assistance, such as sign language interpretation or other reasonable accommodations, should contact Shawn Woodhead Werth, Secretary, at (202) 694–1040, at least 72 hours prior to the meeting date.

PERSON TO CONTACT FOR INFORMATION: Judith Ingram, Press Officer, Telephone: (202) 694–1220.

Shawn Woodhead Werth,

Secretary of the Commission.

[FR Doc. 2012–24531 Filed 10–1–12; 4:15 pm]

BILLING CODE 6715–01–P

FEDERAL MARITIME COMMISSION

Notice of Agreements Filed

The Commission hereby gives notice of the filing of the following agreements under the Shipping Act of 1984. Interested parties may submit comments on the agreements to the Secretary, Federal Maritime Commission, Washington, DC 20573, within ten days of the date this notice appears in the **Federal Register**. Copies of the agreements are available through the Commission's Web site (*www.fmc.gov*) or by contacting the Office of Agreements at (202) 523–5793 or *tradeanalysis@fmc.gov.*

Agreement No.: 011730–005.

Title: GWF/Dole Space Charter and Sailing Agreement.

Parties: Dole Ocean Cargo Express, Inc. and Great White Fleet Liner Services Ltd.

Filing Party: Wade S. Hooker, Esq., 211 Central Park West, New York, NY 10024.

Synopsis: The amendment changes the addresses of the principal offices of the parties.

Agreement No.: 012178–001.

Title: GWF/Crowley Space Charter Agreement.

Parties: Great White Fleet Liner Services Ltd. and Crowley Latin American Services, LLC.

Filing Party: Wade S. Hooker, Esquire, 211 Central Park W., New York, NY 10024.

Synopsis: The amendment changes the addresses of the principal office of Great White Fleet and Crowley Latin American Services.

Agreement No.: 012055–002.

Title: Maersk Line/CMA CGM Cooperative Working Agreement.

Parties: A.P. Moller-Maersk A/S, and CMA CGM S.A.

Filing Party: Wayne R. Rohde, Esq.; Cozen O'Connor; 1627 I Street NW.,

Suite 1100; Washington, DC 20006–4007.

Synopsis: The amendment would expand the geographic scope of the agreement to cover the trades between the U.S. and all foreign countries and would revise language in the authority regarding jointly negotiating individual contracts.

Agreement No.: 012163–001.

Title: MSC/CMA CGM U.S. East Coast—East Coast South America Service Space Charter Agreement.

Parties: Mediterranean Shipping Company S.A. and CMA CGM S.A.

Filing Party: Wayne R. Rohde, Esq.; Cozen O'Connor; 1627 I Street NW., Suite 1100; Washington, DC 20006–4007.

Synopsis: The agreement would add Dominican Republic and Jamaica to the geographic scope of the agreement.

By Order of the Federal Maritime Commission.

Dated: September 27, 2012.

Karen V. Gregory,

Secretary.

[FR Doc. 2012–24421 Filed 10–2–12; 8:45 am]

BILLING CODE 6730–01–P

FEDERAL MARITIME COMMISSION

Ocean Transportation Intermediary License Applicants

The Commission gives notice that the following applicants have filed an application for an Ocean Transportation Intermediary (OTI) license as a Non-Vessel-Operating Common Carrier (NVO) and/or Ocean Freight Forwarder (OFF) pursuant to section 40901 of the Shipping Act of 1984 (46 U.S.C. 40101). Notice is also given of the filing of applications to amend an existing OTI license or the Qualifying Individual (QI) for a licensee.

Interested persons may contact the Office of Ocean Transportation Intermediaries, Federal Maritime Commission, Washington, DC 20573, by telephone at (202) 523–5843 or by email at *OTI@fmc.gov.*

AAB Logistics, LLC (NVO & OFF), 201 E. Dundee Road, #2, Palatine, IL 60074, Officers: Alexander Gibson, President (QI), Daniel Cleary, Secretary, Application Type: Transfer to Dix McGuire International, Inc. dba Oceanic Lines.

ADM Logistics, Inc. (NVO & OFF), 4666 Faries Parkway, Decatur, IL 62526, Officers: Mark D. Schweitzer, Vice President (QI), Joseph D. Taets, President, Application Type: New NVO & OFF License.

Cala Distribution, LLC (NVO & OFF), 2705 NW 109th Avenue, Miami, FL 33172, Officers: Pedro Salcedo, Manager (QI), Daniel S. Toledano, Managing Director, Application Type: Add OFF Service.

Diesel Shipping Inc. (OFF), 8381 NW 66th Street, Miami, FL 33166, Officers: Gustavo Gonzalez, President (QI), Cynthia Cely, Vice President, Application Type: New OFF License.

Farkas Worldwide Shipping Inc. (NVO), 1420 W. Flager Street, Miami, FL 33135, Officers: Heather R. Farkas, President (QI), Maria A. Farkas, Secretary, Application Type: New NVO License.

G.B. Multi Services, Inc. (OFF), 10843 NW 7th Street, #23, Miami, FL 33172, Officer: Gabriela A. Tirado, President (QI), Application Type: New OFF License.

High Priority Solutions Corp (NVO & OFF), 5761 SW 132 Terrace, Miami, FL 33156, Officers: Maria V. Gurdian, Vice President (QI), Gustavo Gurdian, President, Application Type: New NVO & OFF License.

J&T Logistics Inc. dba EDI Logistics Group (NVO & OFF), 18747 S. Laurel Park Road, Rancho Dominguez, CA 90220, Officers: Ivan Liew, Secretary (QI), Chian Guan, CEO, Application Type: New NVO License.

KJW–CHB, LLC (OFF), 765 North Route 83, Bensenville, IL 60106, Officer: Keh J. Wu, President (QI), Application Type: New OFF License.

KT Logistics, Inc. (NVO & OFF), 1470 W. 9th Street, Suite A, Upland, CA 91786, Officers: Mary Ann Ruiz, COO (QI), James Amakasu, President, Application Type: Name Change to Sedona Express, Inc.

MCLimex, LLC (OFF), 1634 S. Mason Road, Katy, TX 77450, Officers: Bernard Vo, Member (QI), Minh Nguyen, Member, Application Type: New OFF License.

Mota Import Export LLC dba MTI Mota Import Export Cargo Express (NVO), 175 Smith Street, Perth Amboy, NJ 08861, Officers: Mercedes Nunez, Manager (QI), Angel M. Ramirez, Chief Executive Manager, Application Type: New NVO License.

Reliable Consolidated Shipping L.L.C. (OFF), 5707 Yachtsman Court, Browns Summit, NC 27214, Officer: Linda K. Jehu-appiah, Member (QI), Application Type: New OFF License.

Robertson Forwarding Co., Inc. (NVO & OFF), 4469 NW 97th Avenue, Doral, FL 33178, Officer: Joan L. Robertson, President (QI), Application Type: Add NVO Service.

Shiplink Trading Corp. dba Shiplink Logistics (NVO & OFF), 164–23 75th Road, #1F, Fresh Meadows, NY 11366, Officer: Linda W. Wu, President (QI), Application Type: New NVO & OFF License.

World Pioneer, Inc. (NVO), 54 Stage Lane, Staten Island, NY 10304, Officer: William Luo, President (QI), Application Type: New NVO License.

World-Wide Shipping Lines, Inc. (NVO), 3400 McIntosh Road, Bldg. B Bay #8, Port Everglades, Ft. Lauderdale, FL 33316, Officer: John Tominelli, President (QI), Application Type: New NVO License.

By the Commission.

Dated: September 28, 2012.

Karen V. Gregory,

Secretary.

[FR Doc. 2012–24384 Filed 10–2–12; 8:45 am]

BILLING CODE 6730–01–P

FEDERAL MARITIME COMMISSION

Ocean Transportation Intermediary License Revocations

The Commission gives notice that the following Ocean Transportation Intermediary licenses have been revoked pursuant to section 40901 of the Shipping Act of 1984 (46 U.S.C. 40101) effective on the date shown.

License No.: 2219F.

Name: Roxana Gugliatto.

Address: 9950 SW 11th Terrace, Miami, FL 33174.

Date Revoked: August 18, 2012.

Reason: Failed to maintain a valid bond.

License No.: 002302N.

Name: Whiting World-Wide Inc. dba World Wide Cargo Consolidators.

Address: 1901 NW 79th Avenue, Miami, FL 33126.

Date Revoked: August 23, 2012.

Reason: Voluntary surrender of license.

License No.: 008135N.

Name: C & F Worldwide Agency Corporation.

Address: Carr, 848 KM 3.2, Calle Diaz Final St. Just, Carolina, PR 00983.

Date Revoked: August 8, 2012.

Reason: Failed to maintain a valid bond.

License No.: 016727NF.

Name: Cargo Express (Saipan), Inc.

Address: Cargo Express Bldg., Lower Base Drive, Lower Base, Saipan, Northern Mariana Islands 96950.

Date Revoked: August 25, 2012.

Reason: Failed to maintain valid bonds.

License No.: 17342F.

Name: Trans Circle Inc.

Address: 1927 West 139th Street, Gardena, CA 90249.

Date Revoked: August 15, 2012.

Reason: Failed to maintain a valid bond.

License No.: 018124NF.
Name: Limitless Transportation Services Inc.
Address: 14631 Heathermere Lane, Orlando, FL 32837.
Date Revoked: August 24, 2012.
Reason: Failed to maintain valid bonds.

License No.: 020088F.
Name: Hal-Mari International Logistics, Inc.
Address: 9122 Telephone Road, Houston, TX 77075.
Date Revoked: August 30, 2012.
Reason: Failed to maintain a valid bond.

License No.: 021016N.
Name: ACT Shipping, Inc.
Address: 11222 S. La Cienega Blvd., Suite 608, Inglewood, CA 90304.
Date Revoked: August 27, 2012.
Reason: Failed to maintain a valid bond.

License No.: 021221NF.
Name: Trans-System Logistics, L.L.C.
Address: 701 North Post Oak, Suite 301, Houston, TX 77024.
Date Revoked: August 10, 2012.
Reason: Failed to maintain valid bonds.

Vern W. Hill,

Director, Bureau of Certification and Licensing.

[FR Doc. 2012–24385 Filed 10–2–12; 8:45 am]

BILLING CODE 6730–01–P

FEDERAL RESERVE SYSTEM

Formations of, Acquisitions by, and Mergers of Bank Holding Companies

The companies listed in this notice have applied to the Board for approval, pursuant to the Bank Holding Company Act of 1956 (12 U.S.C. 1841 *et seq.*) (BHC Act), Regulation Y (12 CFR part 225), and all other applicable statutes and regulations to become a bank holding company and/or to acquire the assets or the ownership of, control of, or the power to vote shares of a bank or bank holding company and all of the banks and nonbanking companies owned by the bank holding company, including the companies listed below.

The applications listed below, as well as other related filings required by the Board, are available for immediate inspection at the Federal Reserve Bank indicated. The applications will also be available for inspection at the offices of the Board of Governors. Interested persons may express their views in writing on the standards enumerated in the BHC Act (12 U.S.C. 1842(c)). If the proposal also involves the acquisition of a nonbanking company, the review also includes whether the acquisition of the nonbanking company complies with the standards in section 4 of the BHC Act (12 U.S.C. 1843). Unless otherwise noted, nonbanking activities will be conducted throughout the United States.

Unless otherwise noted, comments regarding each of these applications must be received at the Reserve Bank indicated or the offices of the Board of Governors not later than October 29, 2012.

A. Federal Reserve Bank of Atlanta (Chapelle Davis, Assistant Vice President) 1000 Peachtree Street, NE., Atlanta, Georgia 30309:

1. First Green Bancorp, Inc., to become a bank holding company by acquiring 100 percent of the voting shares of First Green Bank, both in Mount Dora, Florida.

B. Federal Reserve Bank of Kansas City (Dennis Denney, Assistant Vice President) 1 Memorial Drive, Kansas City, Missouri 64198–0001:

1. Vision Bancshares, Inc., Ada, Oklahoma, to acquire 100 percent of the voting shares of Sulphur Community Bancshares, Inc., and thereby indirectly acquire Community Bank of the Arbuckles, both in Sulphur, Oklahoma.

Board of Governors of the Federal Reserve System, September 28, 2012.

Margaret McCloskey Shanks,

Associate Secretary of the Board.

[FR Doc. 2012–24332 Filed 10–2–12; 8:45 am]

BILLING CODE 6210–01–P

FEDERAL RETIREMENT THRIFT INVESTMENT BOARD

Employee Thrift Advisory Council

TIME AND DATE: 10 a.m. (EST), October 9, 2012.

PLACE: 10th Floor Training Room, 77 K Street NE., Washington, DC 20002.

STATUS: Open.

MATTERS TO BE CONSIDERED:

1. Approval of the April 30, 2012 Minutes
2. Report of the Executive Director on Thrift Savings Plan status
3. Legislative Update
4. Presentation on New Forms of Participant Outreach
5. New Business

CONTACT PERSON FOR MORE INFORMATION: Kim Weaver, Director, Office of External Affairs, (202) 942–1640.

Dated: September 28, 2012.

James B. Petrick,

General Counsel, Federal Retirement Thrift Investment Board.

[FR Doc. 2012–24381 Filed 10–2–12; 8:45 am]

BILLING CODE 6760–01–P

DEPARTMENT OF HEALTH AND HUMAN SERVICES

Announcement of Requirements and Registration for Blue Button Video Challenge

AGENCY: Office of the National Coordinator for Health Information Technology (ONC), HHS. Award Approving Official: Lygeia Ricciardi, Acting Director, Office of Consumer eHealth.

ACTION: Notice.

SUMMARY: The Office of the National Coordinator for Health Information Technology (ONC) announces the launch of the *Blue Button Video Challenge.* This challenge is an open call for the public to create short, engaging and entertaining videos that create awareness of the ''Blue Button'', and encourages others to learn more about it.

This is the fifth in a series of Health IT video contests that will occur throughout 2012. The goal of this video contest series is to generate interactive content that will be used to motivate and inspire others to leverage technology to better manage their health and be more engaged partners in their health and health care. Each challenge will be a call to action for members of the public to create a short video clip [2 minutes or less] on a particular theme, and will award cash prizes to winners in several categories.

DATES: Effective on October 1, 2012.

FOR FURTHER INFORMATION CONTACT: Erin Poetter, Consumer e-Health Policy Analyst, *erin.poetter@hhs.gov* | 202.205.3310.

SUPPLEMENTARY INFORMATION:

Subject of Challenge Competition: ONC's *Blue Button Video Challenge* invites you to create an engaging and entertaining video that creates awareness of the ''Blue Button'', and encourages others to learn about it. Videos should be attention grabbing and share-able!

''Blue Button'' is becoming a universal symbol for you and your caregivers to get easy, secure, online access to your health information. Many people—especially healthy ones—have never actually thought about the importance of having 24 × 7 access to their health information. But it can suddenly become incredibly relevant, and potentially life-saving, in case of an emergency and may come in handy if you are traveling, seeing multiple doctors or seeking a second opinion and you want everyone to know your medical history.

Having your health care information at the click of a button can help you make sure all your health care providers are on the same page and allow you to better manage and understand your health data by plugging it into apps and tools.

If you already have access to a Blue Button, tell us about it. If you've never heard of the term until now, tell us how you'd describe the ''Blue Button'' to your family and friends, or what it would mean for you to have your health information at your fingertips.

You can do anything you want as long as you mention the ''Blue Button'', show an image of the official Blue Button graphic, and mention *www.healthit.gov/bluebutton* as a source for people to find out more. We encourage you to share your video with family and friends, especially since the number of views on YouTube will be one factor when judging submissions.

Through ONC's Blue Button Pledge Community (*www.healthit.gov/pledge*), hundreds of private sector and non-profit organizations have voluntarily pledged to make it easier for you to get secure, electronic access to your personal health information. We expect more and more health care providers, health plans, pharmacies, labs and others to join the Blue Button Pledge and provide you and your caregivers with easy-to-use tools to securely view, download and conveniently share your health information so you can better manage your health and your health care providers can have a more complete picture of your health.

Submissions for this contest will be accepted through November 13, 2012. Please refer to the *http://BlueButtonVideo.challenge.gov* Web site for the most up to date information about the contest and deadlines since they are subject to change.

Eligibility Rules for Participating in the Competition

To be eligible to win a prize under this challenge, an individual or entity—

(1) Shall have registered to participate in the competition under the rules promulgated by HHS;

(2) Shall have complied with all the requirements under this section;

(3) In the case of a private entity, shall be incorporated in and maintain a primary place of business in the United States, and in the case of an individual, whether participating singly or in a group, shall be a citizen or permanent resident of the United States; and

(4) May not be a Federal entity or Federal employee acting within the scope of their employment.

(5) Shall not be an HHS employee working on their applications or submissions during assigned duty hours.

(6) Shall not be an employee of the Office of the National Coordinator for Health Information Technology

(7) Federal grantees may not use Federal funds to develop COMPETES Act challenge applications unless consistent with the purpose of their grant award.

(8) Federal contractors may not use Federal funds from a contract to develop COMPETES Act challenge applications or to fund efforts in support of a COMPETES Act challenge submission.

(9) May not be:

a. an employee of a commercial business whose name, brand name, product or other trademark is mentioned or featured in the Video, or

b. a contractor or employee of an affiliate, subsidiary, advertising agency, or any other company involved in marketing a commercial business, brand name, product or other trademark mentioned or featured in the Video.

(10) May not have been awarded three or more prizes cumulatively in the following ONC challenges: Healthy New Year Video Challenge, Beat Down Blood Pressure Video Challenge, What's in Your Health Record Video Challenge and Managing Meds Video Challenge.

All individual members of a team must meet the eligibility requirements.

An individual or entity shall not be deemed ineligible because the individual or entity used Federal facilities or consulted with Federal employees during a competition if the facilities and employees are made available to all individuals and entities participating in the competition on an equitable basis.

Registration Process for Participants

1. During the Challenge Submission Period, visit *http://BlueButtonVideo.Challenge.gov* and register (Registration is free) or log in with an existing ChallengePost account. After a Contestant signs up, a confirmation email will be sent to the email address provided. The Contestant must use the confirmation email to verify his or her email address. The registered Contestant will then be able to enter a Submission.

2. On *http://BlueButtonVideo.Challenge.gov,* click ''Accept this challenge'' to register your interest in participating. This step ensures that you will receive important challenge updates.

3. Create a video and ensure the following (please read the Official Rules on *http://BlueButtonVideo.Challenge.gov* for complete requirements):

a. Your video must mention the ''Blue Button'' and show an image of the Blue Button logo and

b. Your video must encourage viewers to visit *www.HealthIT.gov/bluebutton* for more information

c. Your video is no longer than 2 minutes

4. Confirm that you have read and agreed to the Official Rules.

5. Submit the following items collectively in your submission by the submission deadline (Please refer to the *http://BlueButtonVideo.challenge.gov* Web site for the most up to date information about the requirements and deadlines since they are subject to change.)

- The title of the Video;
- A link to the Video on *YouTube.com* or *Vimeo.com* (the Video should be no longer than 2 minutes);
- A text description of your video;
- A transcript of the words spoken or sung in the video;
- Uploaded consent forms for everyone who appears in the video regardless of age.

All individuals that appear in a Video must complete and sign the Video Consent Form. If a minor appears in the Video, the minor's parent/legal guardian must also sign the Video Consent Form. A Submission will not be considered complete and eligible to win prizes without a completed Video Consent Form being uploaded from all individuals that appear in the Video. All completed Video Consent Forms must include a handwritten signature, and be scanned, combined in to a single file (ZIP, PDF, or doc), and uploaded on the submission form on *BlueButtonVideo.Challenge.gov.*

Amount of the Prize

Winner	Prize	Quantity
First Prize	$3,000	1
Second Prize	2,000	1
Third Prize	1,250	1
Honorable Prize	750	2
Popular Choice	600	1

Basis Upon Which Winner Will Be Selected

Videos will be judged based on the following criteria (to be equally weighted):

1. Creativity (Includes elements such as the creativity and coherence of the script/story)

2. Potential Impact on Increasing Awareness of Blue Button (Includes whether the video is compelling, inspiring, instructive, and share-able. Does this video create awareness of the ''Blue Button'' in a way that would

resonate with others? The number of views on YouTube will be a consideration.)

3. Implementation of the Idea (Includes elements such as the quality of the video content, narrative and visual appearance)

The five (5) Contestants whose Submissions earn the highest overall score will win, respectively, the prizes identified below in Section 8. In the event of a tie, winners will be selected based on their score on the criteria described in (2), then (1), and then (3). If there is still a tie then the winner will be selected based on a vote by the judging panel.

There will be one Popular Choice award for the video that receives the most number of verified votes during the voting period.

Please refer to *http://bluebuttonvideo.challenge.gov* for the latest information about this contest.

Authority: 15 U.S.C. 3719.

Dated: September 25, 2012.

Erin Poetter,

Office of Consumer eHealth, Office of the National Coordinator for Health Information Technology (ONC), Office of the Secretary (OS).

[FR Doc. 2012–24299 Filed 10–2–12; 8:45 am]

BILLING CODE 4150–45–P

DEPARTMENT OF HEALTH AND HUMAN SERVICES

Final Effect of Designation of a Class of Employees for Addition to the Special Exposure Cohort

AGENCY: National Institute for Occupational Safety and Health (NIOSH), Centers for Disease Control and Prevention, Department of Health and Human Services (HHS).

ACTION: Notice.

SUMMARY: HHS gives notice concerning the final effect of the HHS decision to designate a class of employees from the Medina Modification Center in San Antonio, Texas, as an addition to the Special Exposure Cohort (SEC) under the Energy Employees Occupational Illness Compensation Program Act of 2000. On August 23, 2012, as provided for under 42 U.S.C. 7384q(b), the Secretary of HHS designated the following class of employees as an addition to the SEC:

All employees of the Department of Energy, its predecessor agencies, and their contractors and subcontractors who worked at the Medina Modification Center in San Antonio, Texas, from January 1, 1958, through December 31, 1966, for a number of work days aggregating at least 250 work days, occurring either solely under this employment, or in combination with work days within the parameters established for one or more other classes of employees in the Special Exposure Cohort.

This designation became effective on September 22, 2012, as provided for under 42 U.S.C. 7384*l*(14)(C). Hence, beginning on September 22, 2012, members of this class of employees, defined as reported in this notice, became members of the SEC.

FOR FURTHER INFORMATION CONTACT: Stuart L. Hinnefeld, Director, Division of Compensation Analysis and Support, NIOSH, 4676 Columbia Parkway, MS C–46, Cincinnati, OH 45226, Telephone 877–222–7570. Information requests can also be submitted by email to *DCAS@CDC.GOV.*

John Howard,

Director, National Institute for Occupational Safety and Health.

[FR Doc. 2012–24402 Filed 10–2–12; 8:45 am]

BILLING CODE 4163–19–P

DEPARTMENT OF HEALTH AND HUMAN SERVICES

Final Effect of Designation of a Class of Employees for Addition to the Special Exposure Cohort

AGENCY: National Institute for Occupational Safety and Health (NIOSH), Centers for Disease Control and Prevention, Department of Health and Human Services (HHS).

ACTION: Notice.

SUMMARY: HHS gives notice concerning the final effect of the HHS decision to designate a class of employees from the Clarksville Modification Center Site, Ft. Campbell, in Clarksville, Tennessee, as an addition to the Special Exposure Cohort (SEC) under the Energy Employees Occupational Illness Compensation Program Act of 2000. On August 23, 2012, as provided for under 42 U.S.C. 7384q(b), the Secretary of HHS designated the following class of employees as an addition to the SEC:

All employees of the Department of Energy, its predecessor agencies, and their contractors and subcontractors who worked at the Clarksville Modification Center, Ft. Campbell, in Clarksville, Tennessee, from August 1, 1949, through December 31, 1967, for a number of work days aggregating at least 250 work days, occurring either solely under this employment, or in combination with work days within the parameters established for one or more other classes of employees included in the Special Exposure Cohort.

This designation became effective on September 22, 2012, as provided for under 42 U.S.C. 7384*l*(14)(C). Hence, beginning on September 22, 2012, members of this class of employees, defined as reported in this notice, became members of the SEC.

FOR FURTHER INFORMATION CONTACT: Stuart L. Hinnefeld, Director, Division of Compensation Analysis and Support, NIOSH, 4676 Columbia Parkway, MS C–46, Cincinnati, OH 45226, Telephone 877–222–7570. Information requests can also be submitted by email to *DCAS@CDC.GOV.*

John Howard,

Director, National Institute for Occupational Safety and Health.

[FR Doc. 2012–24408 Filed 10–2–12; 8:45 am]

BILLING CODE 4163–19–P

DEPARTMENT OF HEALTH AND HUMAN SERVICES

Final Effect of Designation of a Class of Employees for Addition to the Special Exposure Cohort

AGENCY: National Institute for Occupational Safety and Health (NIOSH), Centers for Disease Control and Prevention, Department of Health and Human Services (HHS).

ACTION: Notice.

SUMMARY: HHS gives notice concerning the final effect of the HHS decision to designate a class of employees from the Hanford Engineer Works, in Richland, Washington, as an addition to the Special Exposure Cohort (SEC) under the Energy Employees Occupational Illness Compensation Program Act of 2000. On August 23, 2012, as provided for under 42 U.S.C. 7384q(b), the Secretary of HHS designated the following class of employees as an addition to the SEC:

All employees of the Department of Energy, its predecessor agencies, and their contractors and subcontractors who worked at the Hanford Engineer Works in Richland, Washington, from July 1, 1972, through December 31, 1983, for a number of work days aggregating at least 250 work days, occurring either solely under this employment or in combination with work days within the parameters established for one or more other classes of employees included in the Special Exposure Cohort.

This designation became effective on September 22, 2012, as provided for under 42 U.S.C. 7384*l*(14)(C). Hence, beginning on September 22, 2012, members of this class of employees, defined as reported in this notice, became members of the SEC.

FOR FURTHER INFORMATION CONTACT: Stuart L. Hinnefeld, Director, Division of Compensation Analysis and Support, NIOSH, 4676 Columbia Parkway, MS C–

46, Cincinnati, OH 45226, Telephone 877–222–7570. Information requests can also be submitted by email to *DCAS@CDC.GOV.*

John Howard,

Director, National Institute for Occupational Safety and Health.

[FR Doc. 2012–24409 Filed 10–2–12; 8:45 am]

BILLING CODE 4163–19–P

DEPARTMENT OF HEALTH AND HUMAN SERVICES

Final Effect of Designation of a Class of Employees for Addition to the Special Exposure Cohort

AGENCY: National Institute for Occupational Safety and Health (NIOSH), Centers for Disease Control and Prevention, Department of Health and Human Services (HHS).

ACTION: Notice.

SUMMARY: HHS gives notice concerning the final effect of the HHS decision to designate a class of employees from the Winchester Engineering and Analytical Center Site, in Winchester, Massachusetts, as an addition to the Special Exposure Cohort (SEC) under the Energy Employees Occupational Illness Compensation Program Act of 2000. On August 23, 2012, as provided for under 42 U.S.C. 7384q(b), the Secretary of HHS designated the following class of employees as an addition to the SEC:

All employees of the Department of Energy, its predecessor agencies, and their contractors and subcontractors who worked at the Winchester Engineering and Analytical Center in Winchester, Massachusetts, from January 1, 1952, through December 31, 1961, for a number of work days aggregating at least 250 work days, occurring either solely under this employment or in combination with work days within the parameters established for one or more other classes of employees in the Special Exposure Cohort.

This designation became effective on September 22, 2012, as provided for under 42 U.S.C. 7384*l*(14)(C). Hence, beginning on September 22, 2012, members of this class of employees, defined as reported in this notice, became members of the SEC.

FOR FURTHER INFORMATION CONTACT: Stuart L. Hinnefeld, Director, Division of Compensation Analysis and Support, NIOSH, 4676 Columbia Parkway, MS C–46, Cincinnati, OH 45226, Telephone 877–222–7570. Information requests can also be submitted by email to *DCAS@CDC.GOV.*

John Howard,

Director, National Institute for Occupational Safety and Health.

[FR Doc. 2012–24411 Filed 10–2–12; 8:45 am]

BILLING CODE 4163–19–P

DEPARTMENT OF HEALTH AND HUMAN SERVICES

Office of the Secretary

Notice of Interest Rate on Overdue Debts

Section 30.18 of the Department of Health and Human Services' claims collection regulations (45 CFR part 30) provides that the Secretary shall charge an annual rate of interest, which is determined and fixed by the Secretary of the Treasury after considering private consumer rates of interest on the date that the Department of Health and Human Services becomes entitled to recovery. The rate cannot be lower than the Department of Treasury's current value of funds rate or the applicable rate determined from the ''Schedule of Certified Interest Rates with Range of Maturities'' unless the Secretary waives interest in whole or part, or a different rate is prescribed by statute, contract, or repayment agreement. The Secretary of the Treasury may revise this rate quarterly. The Department of Health and Human Services publishes this rate in the **Federal Register**.

The current rate of 11%, as fixed by the Secretary of the Treasury, is certified for the quarter ended June 30, 2012. This interest rate is effective until the Secretary of the Treasury notifies the Department of Health and Human Services of any change.

Dated: September 27, 2012.

Margie Yanchuk,

Director, Office of Financial Policy and Reporting.

[FR Doc. 2012–24416 Filed 10–2–12; 8:45 am]

BILLING CODE 4150–04–P

DEPARTMENT OF HEALTH AND HUMAN SERVICES

HIT Standards Committee Advisory Meeting; Notice of Meeting

AGENCY: Office of the National Coordinator for Health Information Technology, HHS.

ACTION: Notice of meeting.

This notice announces a forthcoming meeting of a public advisory committee of the Office of the National Coordinator for Health Information Technology (ONC). The meeting will be open to the public.

Name of Committee: HIT Standards Committee.

General Function of the Committee: To provide recommendations to the National Coordinator on standards, implementation specifications, and certification criteria for the electronic exchange and use of health information for purposes of adoption, consistent with the implementation of the Federal Health IT Strategic Plan, and in accordance with policies developed by the HIT Policy Committee.

Date and Time: The meeting will be held on October 17, 2012, from 9 a.m. to 3 p.m. Eastern Time.

Location: Omni Shoreham Hotel, 2500 Calvert Street Northwest, Washington, DC 20008. For up-to-date information, go to the ONC Web site, *http://healthit.hhs.gov.*

FOR FURTHER INFORMATION CONTACT: MacKenzie Robertson, Office of the National Coordinator, HHS, 355 E Street SW., Washington, DC 20201, 202–205–8089, Fax: 202–260–1276, email: *mackenzie.robertson@hhs.gov.* Please call the contact person for up-to-date information on this meeting. A notice in the **Federal Register** about last minute modifications that impact a previously announced advisory committee meeting cannot always be published quickly enough to provide timely notice.

Agenda: The committee will hear reports from its workgroups and updates from ONC and other Federal agencies. ONC intends to make background material available to the public no later than two (2) business days prior to the meeting. If ONC is unable to post the background material on its Web site prior to the meeting, it will be made publicly available at the location of the advisory committee meeting, and the background material will be posted on ONC's Web site after the meeting, at *http://healthit.hhs.gov.*

Procedure: ONC is committed to the orderly conduct of its advisory committee meetings. Interested persons may present data, information, or views, orally or in writing, on issues pending before the Committee. Written submissions may be made to the contact person on or before two days prior to the Committee's meeting date. Oral comments from the public will be scheduled in the agenda. Time allotted for each presentation will be limited to three minutes. If the number of speakers requesting to comment is greater than can be reasonably accommodated during the scheduled public comment period, ONC will take written comments

after the meeting until close of business on that day.

Persons attending ONC's advisory committee meetings are advised that the agency is not responsible for providing access to electrical outlets.

ONC welcomes the attendance of the public at its advisory committee meetings. Seating is limited at the location, and ONC will make every effort to accommodate persons with physical disabilities or special needs. If you require special accommodations due to a disability, please contact MacKenzie Robertson at least seven (7) days in advance of the meeting.

Notice of this meeting is given under the Federal Advisory Committee Act (Pub. L. No. 92–463, 5 U.S.C., App. 2).

Dated: September 27, 2012.

MacKenzie Robertson,

FACA Program Lead, Office of Policy and Planning, Office of the National Coordinator for Health Information Technology.

[FR Doc. 2012–24386 Filed 10–2–12; 8:45 am]

BILLING CODE 4150–45–P

DEPARTMENT OF HEALTH AND HUMAN SERVICES

Centers for Disease Control and Prevention

Notice of Establishment

Pursuant to the Homeland Security Presidential Directive (HSPD–21); Section 222 of the Public Health Service Act, [42 U.S.C. 217a] as amended, the Director, Centers for Disease Control and Prevention (CDC), announces the establishment of the National Public Health Surveillance and Biosurveillance Advisory Committee (NPHSBAC).

The National Public Health Surveillance and Biosurveillance Advisory Committee shall advise the Secretary, HHS; the Assistant Secretary for Health; the Assistant Secretary for Preparedness and Response; the Director, CDC; and the Director, Office of Surveillance, Epidemiology and Laboratory Services (OSELS) regarding the broad range of issues impacting the human health component of biosurveillance.

For information, contact Pamela Diaz, M.D., Designated Federal Officer, National Public Health Surveillance and Biosurveillance Advisory Committee, OSELS, Public Health Surveillance Program Office, CDC, 1600 Clifton Road, NE., Atlanta, Georgia 30333, telephone (404) 498–0476, or email: *pdiaz@cdc.gov.*

The Director, Management Analysis and Services Office, has been delegated the authority to sign **Federal Register** notices pertaining to announcements of meetings and other committee management activities for both the Centers for Disease Control and Prevention, and the Agency for Toxic Substances and Disease Registry.

Dated: September 24, 2012.

Elaine L. Baker,

Director, Management Analysis and Services Office, Centers for Disease Control and Prevention.

[FR Doc. 2012–24423 Filed 10–2–12; 8:45 am]

BILLING CODE 4163–18–P

DEPARTMENT OF HEALTH AND HUMAN SERVICES

Administration for Children and Families

[CFDA Number 93.093]

Notice of the Award of Single-Source Program Expansion Supplements to Multiple Grantees Under the Health Profession Opportunity Grants (HPOG)

AGENCY: Office of Family Assistance, ACF, HHS.

ACTION: Award of single-source program expansion supplement grants to multiple grantees under the Office of Family Assistance's Health Profession Opportunity Grants program

SUMMARY: This Administration for Children and Families (ACF), Office of Family Assistance (OFA), Health Profession Opportunity Grants (HPOG) program announces the award of single-source program expansion supplements to all grantees under this program.

DATES: The project period for the award is September 30, 2012–September 29, 2013.

FOR FURTHER INFORMATION CONTACT: Stan Koutstaal, Program Manager, Office of Family Assistance, 370 L'Enfant Promenade, SW., Washington, DC 20447. Telephone: 202–401–5457; Email: *stanley.koutstaal@acf.hhs.gov.*

SUPPLEMENTARY INFORMATION: The following grantees will receive single-source program expansion supplements:

Organization name	Location	State	Supplement award
Bergen Community College	Paramus	NJ	$125,000
Central Community College	Grand Island	NE	125,000
Office of Minority Health Department of Health and Human Services	Concord	NH	125,000
Eastern Gateway Community College	Steubenville	OH	1,535,534
Pima County Community College District	Tucson	AZ	125,000
Buffalo and Erie County Workforce Development Consortium, Inc	Buffalo	NY	125,000
Schenectady County Community College	Schenectady	NY	125,000
Gateway Community and Technical College	Florence	KY	125,000
Temple University of the Commonwealth System of Higher Ed	Philadelphia	PA	125,000
Community Action Project of Tulsa County, Inc	Tulsa	OK	125,000
Central Susquehanna Intermediate Unit	Lewisburg	PA	876,159
Milwaukee Area Workforce Investment Board, Inc	Milwaukee	WI	125,000
Full Employment Council	Kansas City	MO	125,000
South Carolina Department of Social Services	Columbia	SC	125,000
Will County	Joliet	IL	125,000
District Board of Trustees of Pensacola State College	Pensacola	FL	125,000
Alamo Community College District	San Antonio	TX	125,000
Gateway Technical College	Kenosha	WI	125,000
Workforce Development Council of Seattle-King County	Seattle	WA	125,000
Kansas Department of Commerce	Topeka	KS	125,000
San Diego Workforce Partnership, Inc	San Diego	CA	125,000
Research Foundation of the City University of New York—Hostos Community College	Bronx	NY	125,000
Workforce Investment Board SDA–83, Inc	Monroe	LA	125,000
Edmonds Community College	Lynnwood	WA	125,000
Southland Health Care Forum, Inc.	Chicago Heights	IL	125,000
Suffolk County Department of Labor	Hauppauge	NY	125,000

Organization name	Location	State	Supplement award
The WorkPlace, Inc.	Bridgeport	CT	125,000
Blackfeet Community College	Browning	MT	125,000
Turtle Mountain Community College	Belcourt	ND	125,000
Cook Inlet Tribal Council, Inc.	Anchorage	AK	125,000
College of Menominee Nation	Keshena	WI	125,000
Cankdeska Cikana Community College	Fort Totten	ND	125,000

Statutory Authority: Section 2008(a) of Title XX of the Social Security Act, as amended by Section 5507 of the Affordable Care Act (Pub. L. 111–148).

Earl S. Johnson,

Director, Office of Family Assistance.

[FR Doc. 2012–24310 Filed 10–2–12; 8:45 am]

BILLING CODE 4184–48–P

DEPARTMENT OF HEALTH AND HUMAN SERVICES

Food and Drug Administration

[Docket No. FDA–2012–N–0001]

Clinical Investigator Training Course

AGENCY: Food and Drug Administration, HHS.

ACTION: Notice.

SUMMARY: The Food and Drug Administration's (FDA) Center for Drug Evaluation and Research/Office of Medical Policy and the Duke University Office of Continuing Medical Education are cosponsoring a 3-day training course for clinical investigators on scientific, ethical, and regulatory aspects of clinical trials. This training course is intended to provide clinical investigators with expertise in the design, conduct, and analysis of clinical trials; improve the quality of clinical trials; and enhance the safety of trial participants. Senior FDA staff will communicate directly with clinical investigators on issues of greatest importance for successful clinical research.

Date and Time: The training course will be held on November 13 and 14, 2012, from 8 a.m. to 5 p.m., and on November 15, 2012, from 8 a.m. to 4 p.m.

Location: The course will be held at the Holiday Inn College Park, 10000 Baltimore Ave., College Park, MD 20740.

Contact Person: Connie Wisner, Office of Medical Policy, Center for Drug Evaluation and Research, Food and Drug Administration, 10903 New Hampshire Ave., Bldg. 51, rm. 6360, Silver Spring, MD 20993, 301–796–8509.

Registration: Register by October 22, 2012. The registration fee is $400 per person. The fee includes course materials and onsite lunch. Early registration is recommended because seating is limited. There will be no onsite registration.

Register online for the training course at the registration Web site: *http://evm.auxserv.duke.edu/iebms/reg/reg_p1_form.aspx?oc=10&ct=DCRIINVEST&eventid=46475* or download a full-size copy of the registration form and mail a check and completed form to: Duke University Conference and Event Services, FDA Investigator Course Box 90841, 101 Bryan Center, Durham, NC 27708. You will receive an email that confirms your registration. (FDA has verified the Web site address, but FDA is not responsible for subsequent changes to the Web site after this document publishes in the **Federal Register**.)

Attendees are responsible for their own accommodations. A block of rooms has been reserved under ''FDA Clinical Investigator Course'' at the Holiday Inn College Park at a reduced conference rate. Reservations for these accommodations can be made online using the course registration Web site mentioned previously. Click on ''registration form.'' You will see a direct link to the hotel.

Registration materials, payment procedures, accommodation information, and a detailed description of the course can be found at the registration/information Web site mentioned previously.

If you need special accommodations due to a disability, please contact Connie Wisner at least 7 days in advance. Persons attending the course are advised that FDA is not responsible for providing access to electrical outlets.

I. Background

Clinical trial investigators play a critical role in the development of medical products. They are responsible for ensuring the safe and ethical treatment of study subjects and for collecting adequate and reliable data to support regulatory decisions. This course is intended to assist clinical investigators in understanding what preclinical and clinical information is needed to support the investigational use of medical products, as well as the scientific, regulatory, and ethical considerations involved in the conduct of clinical trials. The course will cover a wide variety of key topics, including material on novel safety concerns, adverse event monitoring, compliance with the legal and ethical obligations of clinical research, and acceptable scientific and analytic standards in the design and conduct of clinical studies. The faculty will include a diverse representation of senior FDA staff, enabling FDA to communicate directly with clinical investigators on issues of greatest importance for successful clinical research.

II. Description of the Training Course

A. Purpose

The training course is designed to provide clinical investigators with an overview of the following information:

- The essential toxicological, pharmacological, and manufacturing data to support investigational drug use in humans;
- Fundamental issues in the design and conduct of clinical trials;
- Statistical and analytic considerations in the interpretation of trial data;
- Appropriate safety evaluation during studies; and
- The ethical considerations and regulatory requirements for clinical trials.

In addition, the course should do the following:

- Foster a cadre of clinical investigators with knowledge, experience, and commitment to investigational medicine;
- Promote communication between clinical investigators and FDA;
- Enhance investigators' understanding of FDA's role in experimental medicine; and
- Improve the quality of data while enhancing subject protection in the performance of clinical trials.

B. Proposed Agenda

The course will be conducted over 3 days and comprised of approximately 26 lectures, each lasting between 30 and

45 minutes. The course will be presented mainly by senior FDA staff, with guest lecturers presenting selected topics.

The course will address FDA's role in clinical studies, regulatory considerations for clinical trials, and review of the material generally appearing in an ''investigator's brochure,'' i.e., the preclinical information (toxicology, animal studies, and chemistry/manufacturing information) that supports initial clinical trials in humans. Presenters will discuss the role of clinical pharmacology in early clinical studies and how this information is used in the design of subsequent studies. The course will also include discussions of scientific, statistical, ethical, and regulatory aspects of clinical studies. On November 15, 2012, participants will choose among three breakout sessions that will explain how to put together an application to FDA for drugs, biologics, or devices.

C. Target Audience

The course is targeted at health care professionals responsible for, or involved in, the conduct and/or design of clinical trials.

Dated: September 26, 2012.

Leslie Kux,

Assistant Commissioner for Policy.

[FR Doc. 2012–24214 Filed 10–2–12; 8:45 am]

BILLING CODE 4160–01–P

DEPARTMENT OF HEALTH AND HUMAN SERVICES

Food and Drug Administration

[Docket No. FDA–2012–N–0284]

Pediatric Studies of Sodium Nitroprusside Conducted in Accordance With Section 409I of the Public Health Service Act; Establishment of Public Docket

AGENCY: Food and Drug Administration, HHS.

ACTION: Notice.

SUMMARY: The Food and Drug Administration (FDA) is announcing the opening of a public docket to make available to the public a report of the pediatric studies of sodium nitroprusside that were conducted in accordance with the Public Health Service Act (the PHS Act) and submitted to the Director of the National Institutes of Health (NIH) and the Commissioner of Food and Drugs.

DATES: Submit either electronic or written comments by November 2, 2012.

ADDRESSES: You may submit comments, identified by FDA–2012–N–0284, by any of the following methods.

Electronic Submissions

Submit electronic comments in the following way:

- *Federal eRulemaking Portal: http://www.regulations.gov.* Follow the instructions for submitting comments.

Written Submissions

Submit written submissions in the following ways:

- *Fax:* 301–827–6870.
- *Mail/Hand delivery/Courier (for paper or CD–ROM submissions):* Division of Dockets Management (HFA–305), Food and Drug Administration, 5630 Fishers Lane, rm. 1061, Rockville, MD 20852.

Instructions: All submissions received must include the Agency name and Docket No. for this rulemaking. All comments received may be posted without change to *http://www.regulations.gov,* including any personal information provided.

Docket: For access to the docket to read background documents or comments received, go to *http://www.regulations.gov* and insert the docket number, found in brackets in the heading of this document, into the ''Search'' box and follow the prompts and/or go to the Division of Dockets Management, 5630 Fishers Lane, rm. 1061, Rockville, MD 20852.

FOR FURTHER INFORMATION CONTACT: Akilah Green, Center for Drug Evaluation and Research, Food and Drug Administration, 10903 New Hampshire Ave., Bldg. 22, rm. 6475, Silver Spring, MD 20993–0002, email: *akilah.green@fda.hhs.gov.*

SUPPLEMENTARY INFORMATION: Under section 409I of the PHS Act (42 U.S.C. 284m), the Secretary of the Department of Health and Human Services (the Secretary) acting through the Director of NIH, in consultation with FDA and experts in pediatric research, must develop, prioritize, and publish a list of priority needs in pediatric therapeutics, including drugs, biological products, and indications that require study.[1] For drugs and biological products and indications on this list, FDA, acting in consultation with NIH, is authorized to issue a written request to holders of a new drug application (NDA) or abbreviated new drug application (ANDA) for a drug, or holders of a biologics license application (BLA) for a biological product, for which pediatric studies are needed to provide safety and efficacy information for pediatric labeling. If the sponsors receiving the written request decline to conduct the studies or if FDA does not receive a response to the written request within 30 days of the date the written request was issued, the Secretary, acting through the Director of NIH and in consultation with FDA, must publish a request for proposals to conduct the pediatric studies described in the written request and award funds to an entity with appropriate expertise for the conduct of the pediatric studies described in the written request. Upon completion of the pediatric studies, a study report that includes all data generated in connection with the studies must be submitted to FDA and NIH and placed in a public docket assigned by FDA.

Sodium nitroprusside, a hypotensive agent, is labeled for the immediate reduction of blood pressure of patients in hypertensive crises, for producing controlled hypotension in order to reduce bleeding during surgery, and for the treatment of acute congestive heart failure. Off-label use of sodium nitroprusside in pediatric patients is significant, despite the lack of adequate pharmacokinetic, dosing, tolerability, and safety data for this age group.

On January 21, 2003, NIH published a **Federal Register** notice (68 FR 2789) announcing the addition of several drugs, including sodium nitroprusside, to the priority list of drugs most in need of study for use by children to ensure their safety and efficacy. A written request for pediatric studies of sodium nitroprusside was issued on July 8, 2002, to Abbott Laboratories, the holder of the NDA for sodium nitroprusside. FDA did not receive a response to the written request. Accordingly, NIH issued a request for proposals to conduct the pediatric studies described in the written request in July 2004, and awarded funds to Duke University and Stanford University in September 2004, to complete the studies described in the written request. Upon completion of the pediatric studies, a report of the pediatric studies of sodium nitroprusside was submitted to NIH and FDA. As required under section 409I of the PHS act, FDA opened a public docket and NIH placed in the docket the report of pediatric studies of sodium nitroprusside that was submitted to NIH and FDA. The report includes all data generated in connection with the study, including the written request.

We invite interested parties to review the report and submit comments to the docket. The public docket is available

[1] Prior to the 2007 reauthorization of the Best Pharmaceuticals for Children Act (Pub. L. 107–109), the priority list included specific drugs instead of therapeutic areas.

for public review in the Division of Dockets Management (see **ADDRESSES**) between 9 a.m. and 4 p.m., Monday through Friday.

Dated: September 26, 2012.

Leslie Kux,

Assistant Commissioner for Policy.

[FR Doc. 2012–24213 Filed 10–2–12; 8:45 am]

BILLING CODE 4160–01–P

DEPARTMENT OF HEALTH AND HUMAN SERVICES

Food and Drug Administration

[Docket No. FDA–2012–N–0981]

Withdrawal of Approval of New Animal Drug Applications; Butorphanol; Doxapram; Triamcinolone; Tylosin

AGENCY: Food and Drug Administration, HHS.

ACTION: Notice.

SUMMARY: The Food and Drug Administration (FDA) is withdrawing approval of a new animal drug application (NADA) and three abbreviated new animal drug applications (ANADAs) at the sponsors' request because the products are no longer manufactured or marketed.

DATES: Withdrawal of approval is effective October 15, 2012.

FOR FURTHER INFORMATION CONTACT: David Alterman, Center for Veterinary Medicine (HFV–212), Food and Drug Administration, 7519 Standish Pl., Rockville, MD 20855, 240–453–6843, email: *david.alterman@fda.hhs.gov.*

SUPPLEMENTARY INFORMATION: The following sponsors have requested that FDA withdraw approval of the NADA and ANADAs listed in table 1 of this document because the products are no longer manufactured or marketed.

TABLE 1—NADA AND ANADAS FOR WHICH WITHDRAWAL OF APPROVAL HAS BEEN REQUESTED

NADA/ANADA No.	Trade name (drug)	Applicant
100–556	Vigorena Feeds Hy-Ty Premix (tylosin phosphate)	Springfield Milling Corp., Vigorena Feeds, Springfield, MN 56087.
200–435	RESPIRAM (doxapram hydrochloride) Injection	Modern Veterinary Therapeutics, LLC, 18001 Old Cutler Rd., Suite 317, Miami, FL 33157.
200–446	BUTORPHINE (butorphanol tartrate) Injection	Modern Veterinary Therapeutics, LLC, 18001 Old Cutler Rd., Suite 317, Miami, FL 33157.
200–459	VETAZINE (triamcinolone) Cream	Modern Veterinary Therapeutics, LLC, 18001 Old Cutler Rd., Suite 317, Miami, FL 33157.

Therefore, under authority delegated to the Commissioner of Food and Drugs and redelegated to the Center for Veterinary Medicine, and in accordance with § 514.116 *Notice of withdrawal of approval of application* (21 CFR 514.116), notice is given that approval of NADA 100–556 and ANADAs 200–435, 200–446, and 200–459, and all supplements and amendments thereto, is hereby withdrawn, effective October 15, 2012.

Elsewhere in this issue of the **Federal Register**, FDA is amending the animal drug regulations to reflect the voluntary withdrawal of approval of these applications.

Dated: September 27, 2012.

Bernadette Dunham,

Director, Center for Veterinary Medicine.

[FR Doc. 2012–24330 Filed 10–2–12; 8:45 am]

BILLING CODE 4160–01–P

DEPARTMENT OF HEALTH AND HUMAN SERVICES

National Institutes of Health

Government-Owned Inventions; Availability for Licensing

AGENCY: National Institutes of Health, Public Health Service, HHS.

ACTION: Notice.

SUMMARY: The inventions listed below are owned by an agency of the U.S. Government and are available for licensing in the U.S. in accordance with 35 U.S.C. 207 to achieve expeditious commercialization of results of federally-funded research and development. Foreign patent applications are filed on selected inventions to extend market coverage for companies and may also be available for licensing.

FOR FURTHER INFORMATION CONTACT: Licensing information and copies of the U.S. patent applications listed below may be obtained by writing to the indicated licensing contact at the Office of Technology Transfer, National Institutes of Health, 6011 Executive Boulevard, Suite 325, Rockville, Maryland 20852–3804; telephone: 301–496–7057; fax: 301–402–0220. A signed Confidential Disclosure Agreement will be required to receive copies of the patent applications.

A Novel Immortalized Human Adrenal Cell Line With Inactive Protein Kinase A for Studies on cAMP Signaling and Endocrine Tumorigenesis

Description of Technology: The first known immortalized cell line with a naturally-occurring inactivating mutation in PRKAR1A, the regulatory subunit type 1A (R1alpha) of protein kinase A (PKA), which is associated with tumor formation.

PKA isozyme balance is critical for the control of cAMP signaling and related cell cycle and proliferation changes. Aberrant cAMP signaling has been linked to adrenocortical and other, mostly endocrine, tumors. Inactivating mutations in the PRKAR1A gene are a known cause of Carney Complex—an autosomal dominant multiple neoplasia syndrome associated with skin, heart, and other myxomas and a variety of endocrine tumors.

Potential Commercial Applications:

- Studies on multiple tumor formation associated with Carney Complex.
- Characterization of cAMP-mediated mechanisms of endocrine tumor formation.
- Studies of a large variety of cAMP-mediated processes in normal physiology and disease.

Competitive Advantages: First known immortalized cell line with a naturally-occurring inactivating mutation in the PRKAR1A gene.

Development Stage: In vitro data available.

Inventor: Constantine A. Stratakis (NICHD).

Publication: Nesterova M, *et al.* An immortalized human cell line bearing a PRKAR1A-inactivating mutation: effects of overexpression of the wild-type

Allele and other protein kinase A subunits. J Clin Endocrinol Metab. 2008 Feb;93(2):565–71. [PMID 18056771].

Intellectual Property: HHS Reference No. E–267–2012/0—Research Material. Patent protection is not being pursued for this technology.

Licensing Contact: Patrick McCue, Ph.D.; 301–435–5560; *mccuepat@mail.nih.gov.*

Collaborative Research Opportunity: The *Eunice Kennedy Shriver* National Institute of Child Health and Human Development is seeking statements of capability or interest from parties interested in collaborative research to further develop, evaluate or commercialize this technology. For collaboration opportunities, please contact Joseph Conrad III, Ph.D. at *jmconrad@mail.nih.gov.*

Modulation of Regulatory T-Cell and B-Cell Lymphocytes for the Treatment of Autoimmune and Other Disease Indications

Description of Technology: A method of modulating the immune response by affecting the activity of the regulatory lymphocytes through targeting of the Hepatitis A Virus receptor 1 (HAVCR1) receptor. This methodology can be developed for the treatment of autoimmune diseases, allergies, prevention of transplant rejection, and incorporated into therapeutic strategies for cancer.

Regulatory lymphocytes, such as regulatory T-cells (Tregs) and B-cells (Bregs), play a significant role in suppressing and controlling immune responses to antigens, including allergens and self-antigens that induce autoimmune diseases. The Tregs and Bregs also control the immune responses to microbial pathogens thereby limiting excessive damage to tissue. HAVCR1 is expressed on these regulatory lymphocytes and functions as a master regulator of these cells.

Potential Commercial Applications:

- Treatment of Autoimmune Diseases.
- Treatment of Allergies.
- Prevention of Rejection of Allogenic Transplants.
- Cancer Therapy.
- Immunotherapies.
- Stimulate Response to Vaccines (adjuvant).

Competitive Advantages: Can be used to target multiple disease states.

Development Stage:

- Early-stage.
- Pre-clinical.
- In vitro data available.

Inventors: Gerardo Kaplan, Mohanraj Manangeeswaran, Jerome Jacques, Krishnamurthy Konduru (all of FDA).

Publication: Manangeeswaran M, *et al.* Binding of hepatitis A virus to its cellular receptor 1 inhibits T-regulatory cell functions in humans. Gastroenterology. 2012 Jun;142(7):1516–25.e3. [PMID 22430395].

Intellectual Property: HHS Reference No. E–095–2012/0—U.S. Provisional Application No. 61/611,437 filed 15 Mar 2012.

Related Technology: HHS Reference No. E–150–1994/0—U.S. Patent 5,622,861 issued 22 Apr 1997 (Hepatitis A Virus Receptor).

Licensing Contact: Kevin W. Chang, Ph.D.; 301–435–5018; *changke@mail.nih.gov.*

Collaborative Research Opportunity: The Center for Biologics Evaluation and Research, Laboratory of Emerging Pathogens, is seeking statements of capability or interest from parties interested in collaborative research to further develop, evaluate or commercialize targeting of HAVCR1 to control Treg and Breg function in human diseases. For collaboration opportunities, please contact Gerardo Kaplan at *gerardo.kaplan@fda.hhs.gov.*

A Method To Expand a Population of Regulatory T Cells Optimal for the Treatment of Autoimmune Diseases

Description of Technology: The transfusion of regulatory T cells (Tregs) has been used in the clinic to successfully prevent graft vs. host disease and is currently being evaluated in the treatment of other autoimmune diseases, such as organ graft rejection, type 1 diabetes and multiple sclerosis. Prior to transfusion, adoptive regulatory T cell transfer requires the expansion of regulatory T cells in culture; this results in a mixed population of regulatory T cells that limits the effectiveness of the transferred cells.

Scientists at the NIH have developed a method that promotes the expansion of regulatory T cells that are longer lived, more stable, and more suppressive of the autoimmune response. By supplementing T cell cultures with DNA oligonucleotides, the inventors were able to enrich the regulatory T cell population that enhanced the suppression of the autoimmune response. This method has the potential to more effectively generate regulatory T cells for the treatment of autoimmune diseases.

Potential Commercial Applications: Treatment of autoimmune diseases, such as Graft vs. Host Disease, Organ Graft Rejection Type 1 Diabetes, Multiple Sclerosis.

Competitive Advantages:

- More effective therapy when compared to traditional T cell expansion methods.
- Expansion method is inexpensive and similar to current methods.

Development Stage: In vitro data available.

Inventors: Yong Chan Kim and Ethan M. Shevach (NIAID).

Publication: Kim Y, *et al.* Oligodeoxynucleotides stabilize Helios-expressing Foxp3+ human T regulatory cells during in vitro expansion. Blood. 2012 Mar 22;119(12):2810–8. [PMID 22294730].

Intellectual Property: HHS Reference No. E–279–2011/0—U.S. Provisional Application No. 61/576,837 filed 16 Dec 2011.

Licensing Contact: John Stansberry, Ph.D.; 301–435–5236; *stansbej@mail.nih.gov.*

Peptides for Treatment of Tumor Necrosis Factor Alpha Mediated Inflammatory Disease

Description of Technology: Tumor Necrosis Factor alpha (TNF-alpha) is a multifunctional cytokine that mediates inflammation, immune regulation, and cellular proliferation. This cytokine is converted to its active form by TNF-alpha converting enzyme (TACE). Pathological increases in TNF-alpha activity have been associated with a wide variety of inflammatory diseases, including inflammatory bowel disease, rheumatoid arthritis, and cancer. Inhibiting the conversion of TNF-alpha to its active form by inhibiting TACE represents a potential treatment for these diseases.

The current technology provides peptides, derived from an N-terminal fragment of the TACE protein, that inhibit TACE activity. Also described are methods of using these peptides to lower levels of active TNF-alpha. These peptides could be used as a treatment for TNF-alpha-mediated inflammatory diseases.

Potential Commercial Applications: Treatment of TNF-alpha mediated inflammatory diseases.

Competitive Advantages: Inhibition of TACE activity represents a novel mechanism to treat inflammatory disease.

Development Stage:

- Early-stage.
- In vitro data available.

Inventors: Stewart J. Levine *et al.* (NHLBI).

Publication: Buckley CA, *et al.* Amino-terminal TACE prodomain attenuates TNFR2 cleavage independently of the cysteine switch. Am J Physiol Lung Cell Mol Physiol. 2005 Jun;288(6):L1132–8. [PMID 15749738].

Intellectual Property: HHS Reference No. E–208–2003/0—U.S. Patent No. 7,655,752 issued 02 Feb 2010.

Licensing Contact: Tara Kirby, Ph.D.; 301–435–4426; *tarak@mail.nih.gov.*

Human Antibodies and Fusion Proteins With Potent and Broad HIV–1 Neutralizing Activity

Description of Technology: The inventions listed below provide multiple novel human anti-HIV–1 domain antibodies (m36 and its affinity-matured versions) and their fusion proteins with two-domain or single-domain human soluble CD4 (sCD4) that can potentially be used alone or synergistically with other anti-HIV–1 antibodies and antiretroviral drugs as therapeutics and/or preventatives for infection by different HIV–1 strains.

Some of the inventions listed below also describe some fusion proteins as vaccine immunogens that could elicit broadly neutralizing antibodies against HIV-isolates from different clades. One invention also describes the methods to prepare and use the immunogens in the vaccination for prevention of HIV–1 infections. More specifically, the later invention provides a vaccine composed of a primary immunogen and a secondary immunogen, and a method for making the vaccine which could be effective in eliciting desired broadly neutralizing antibodies. The primary immunogen could be effective in activating B cell receptors (BCRs) that are on the maturational pathways of the desired antibodies and have an intermediate degree of somatic mutational diversity. The secondary immunogen contains epitopes of the desired antibodies and could be effective in further diversifying the BCRs sufficiently to form mature BCRs that have the identical or substantially identical sequence as the desired antibodies.

Potential Commercial Applications: Treatment and prevention of HIV–1 infections.

Competitive Advantages:

- Elicits broadly neutralizing antibodies against HIV–1 isolates from different clades.
- Potentially elicits antibodies that are not regulated by tolerance mechanisms.
- Novel methods to design vaccines for HIV–1 treatment and prevention.
- May also be used for designing vaccines for cancer treatment.
- Relatively small size allows for potential penetration into lymphoid tissues.

Development Stage:

- In vitro data available.
- In vivo data available (animal).

Inventors: Dimiter Dimitrov and Weizao Chen (NCI).

Publications:

1. Chen W, *et al.* Human domain antibodies to conserved sterically restricted regions on gp120 as exceptionally potent cross-reactive HIV–1 neutralizers. Proc Natl Acad Sci USA. 2008 Nov 4;105(44):17121–6. [PMID 18957538].

2. Chen W, *et al.* Engineered single human CD4 domains as potent HIV–1 inhibitors and components of vaccine immunogens. J Virol. 2011 Sep;85(18):9395–405. [PMID 21715496].

3. Chen W, *et al.* Bifunctional fusion proteins of the human engineered antibody domain m36 with human soluble CD4 are potent inhibitors of diverse HIV–1 isolates. Antiviral Res. 2010 Oct;88(1):107–15. [PMID 20709110].

4. Chen W, Dimitrov DS. Human monoclonal antibodies and engineered antibody domains as HIV entry inhibitors. Curr Opin HIV AIDS. 2009 Mar;4(2):112–7. [PMID 19339949].

Intellectual Property:

- HHS Reference No. E–043–2008/0—U.S. Patent Application No. 12/811,998 filed 07 Jul 2010; related international applications.
- HHS Reference No. E–322–2008/0—U.S. Patent Application No. 13/123,659 filed 11 Apr 2011.
- HHS Reference No. E–103–2010/1—PCT Application No. PCT/US2011/037439 filed 20 May 2011, which published as WO 2011–146891 on 31 May 2012.

Licensing Contact: Sally Hu, Ph.D.; 301–435–5606; *hus@mail.nih.gov.*

Collaborative Research Opportunity: The NCI CCR Nanobiology Program is seeking statements of capability or interest from parties interested in collaborative research to further develop, evaluate or commercialize m36, single domain sCD4, and related fusion proteins as candidate therapeutics against HIV–1. For collaboration opportunities, please contact John Hewes, Ph.D. at *hewesj@mail.nih.gov.*

Dated: September 27, 2012.

Richard U. Rodriguez,

Director, Division of Technology Development and Transfer, Office of Technology Transfer, National Institutes of Health.

[FR Doc. 2012–24251 Filed 10–2–12; 8:45 am]

BILLING CODE 4140–01–P

DEPARTMENT OF HEALTH AND HUMAN SERVICES

National Institutes of Health

National Institute of General Medical Sciences Notice of Closed Meeting

Pursuant to section 10(d) of the Federal Advisory Committee Act, as amended (5 U.S.C. App.), notice is hereby given of the following meeting.

The meeting will be closed to the public in accordance with the provisions set forth in sections 552b(c)(4) and 552b(c)(6), Title 5 U.S.C., as amended. The grant applications and the discussions could disclose confidential trade secrets or commercial property such as patentable material, and personal information concerning individuals associated with the grant applications, the disclosure of which would constitute a clearly unwarranted invasion of personal privacy.

Name of Committee: National Institute of General Medical Sciences Special Emphasis Panel; Phase III Antibiotic Clinical Trials.

Date: November 1, 2012.

Time: 11 a.m. to 12 p.m.

Agenda: To review and evaluate grant applications.

Place: National Institutes of Health, Natcher Building, 45 Center Drive, Room 3An18K, Bethesda, MD 20892.

Contact Person: Brian R. Pike, Ph.D., Scientific Review Officer, Office of Scientific Review, National Institute of General Medical Sciences, National Institutes of Health, 45 Center Drive, Room 3An18, Bethesda, MD 20892, 301–594–3907, *pikbr@mail.nih.gov.*

(Catalogue of Federal Domestic Assistance Program Nos. 93.375, Minority Biomedical Research Support; 93.821, Cell Biology and Biophysics Research; 93.859, Pharmacology, Physiology, and Biological Chemistry Research; 93.862, Genetics and Developmental Biology Research; 93.88, Minority Access to Research Careers; 93.96, Special Minority Initiatives, National Institutes of Health, HHS)

Dated: September 27, 2012.

Melanie J. Gray,

Program Analyst, Office of Federal Advisory Committee Policy.

[FR Doc. 2012–24253 Filed 10–2–12; 8:45 am]

BILLING CODE 4140–01–P

DEPARTMENT OF HEALTH AND HUMAN SERVICES

National Institutes of Health

Eunice Kennedy Shriver National Institute of Child Health & Human Development; Notice of Closed Meeting

Pursuant to section 10(d) of the Federal Advisory Committee Act, as

amended (5 U.S.C. App.), notice is hereby given of the following meeting.

The meeting will be closed to the public in accordance with the provisions set forth in sections 552b(c)(4) and 552b(c)(6), Title 5 U.S.C., as amended. The grant applications and the discussions could disclose confidential trade secrets or commercial property such as patentable material, and personal information concerning individuals associated with the grant applications, the disclosure of which would constitute a clearly unwarranted invasion of personal privacy.

Name of Committee: National Institute of Child Health and Human Development Special Emphasis Panel; ZHD1 DSR–Y 40 2.

Date: October 25, 2012.

Time: 12 p.m. to 2 p.m.

Agenda: To review and evaluate grant applications.

Place: National Institutes of Health, 6100 Executive Boulevard, Rockville, MD 20852, (Telephone Conference Call).

Contact Person: Cathy J. Wedeen, Ph.D., Scientific Review Officer, Division of Scientific Review, OD, Eunice Kennedy Shriver National Institute of Child Health and Human Development, NIH, 6100 Executive Blvd., Room 5B01–G, Bethesda, MD 20892, 301–435–6878, *wedeenc@mail.nih.gov.*

(Catalogue of Federal Domestic Assistance Program Nos. 93.864, Population Research; 93.865, Research for Mothers and Children; 93.929, Center for Medical Rehabilitation Research; 93.209, Contraception and Infertility Loan Repayment Program, National Institutes of Health, HHS)

Dated: September 27, 2012.

Michelle Trout,

Program Analyst, Office of Federal Advisory Committee Policy.

[FR Doc. 2012–24255 Filed 10–2–12; 8:45 am]

BILLING CODE 4140–01–P

DEPARTMENT OF HEALTH AND HUMAN SERVICES

National Institutes of Health

National Institute of Environmental Health Sciences; Notice of Closed Meetings

Pursuant to section 10(d) of the Federal Advisory Committee Act, as amended (5 U.S.C. App.), notice is hereby given of the following meetings.

The meetings will be closed to the public in accordance with the provisions set forth in sections 552b(c)(4) and 552b(c)(6), Title 5 U.S.C., as amended. The grant applications and the discussions could disclose confidential trade secrets or commercial property such as patentable material, and personal information concerning individuals associated with the grant applications, the disclosure of which would constitute a clearly unwarranted invasion of personal privacy.

Name of Committee: National Institute of Environmental Health Sciences Special Emphasis Panel; Review of Worker Safety Training.

Date: October 24, 2012.

Time: 12 p.m. to 5 p.m.

Agenda: To review and evaluate grant applications.

Place: NIEHS, Keystone Building, 530 Davis Drive, Research Triangle Park, NC 27709 (Telephone Conference Call).

Contact Person: Janice B Allen, Ph.D., Scientific Review Administrator, Scientific Review Branch, Division of Extramural Research and Training, National Institute of Environmental Health Science, P.O. Box 12233, MD EC–30/Room 3170 B, Research Triangle Park, NC 27709, 919/541–7556.

Name of Committee: National Institute of Environmental Health Sciences Special Emphasis Panel; Support for Conferences and Scientific Meetings.

Date: October 25, 2012.

Time: 12 p.m. to 5 p.m.

Agenda: To review and evaluate grant applications.

Place: NIEHS, Keystone, 530 Davis Drive, Research Triangle Park, NC (Telephone Conference Call).

Contact Person: Janice B Allen, Ph.D., Scientific Review Administrator, Scientific Review Branch, Division of Extramural Research and Training, National Institute of Environmental Health Science, P.O. Box 12233, MD EC–30/Room 3170 B, Research Triangle Park, NC 27709, 919/541–7556.

Name of Committee: National Institute of Environmental Health Sciences Special Emphasis Panel; Superfund Research Program.

Date: November 1–2, 2012.

Time: 8 a.m. to 5 p.m.

Agenda: To review and evaluate grant applications.

Place: Hilton Raleigh-Durham Airport at Research Triangle, 4810 Page Creek Lane, Durham, NC 27703.

Contact Person: Leroy Worth, Ph.D., Scientific Review Administrator, Scientific Review Branch, Division of Extramural Research and Training, National Institute of Environmental Health Sciences, P.O. Box 12233, MD EC–30/Room 3171, Research Triangle Park, NC 27709, 919/541–0670, *worth@niehs.nih.gov.*

(Catalogue of Federal Domestic Assistance Program Nos. 93.115, Biometry and Risk Estimation—Health Risks from Environmental Exposures; 93.142, NIEHS Hazardous Waste Worker Health and Safety Training; 93.143, NIEHS Superfund Hazardous Substances—Basic Research and Education; 93.894, Resources and Manpower Development in the Environmental Health Sciences; 93.113, Biological Response to Environmental Health Hazards; 93.114, Applied Toxicological Research and Testing, National Institutes of Health, HHS)

Dated: September 27, 2012.

Carolyn A. Baum,

Program Analyst, Office of Federal Advisory Committee Policy.

[FR Doc. 2012–24270 Filed 10–2–12; 8:45 am]

BILLING CODE 4140–01–P

DEPARTMENT OF HEALTH AND HUMAN SERVICES

National Institutes of Health

Office of the Director, National Institutes of Health; Notice of Closed Meeting

Pursuant to section 10(d) of the Federal Advisory Committee Act, as amended (5 U.S.C. App.), notice is hereby given of a meeting of the Council of Councils.

The meeting will be closed to the public in accordance with the provisions set forth in sections 552b(c)(4) and 552b(c)(9)(B), Title 5 U.S.C., as amended. The closed portion of the meeting is likely to include disclosure of trade secrets and/or commercial or confidential financial information obtained from a person. In addition, it is likely that premature disclosure of the matters to be discussed would significantly frustrate implementation of a proposed agency action.

Name of Committee: Council of Councils.

Date: October 29, 2012.

Time: 11 a.m. to 1 p.m.

Agenda: To review and evaluate discussion of Research Projects involving Chimpanzees.

Place: National Institutes of Health, Building 1, 1 Center Drive, Room 260, Bethesda, MD 20892, (Telephone Conference Call).

Contact Person: Robin Kawazoe, Executive Secretary, Division of Program Coordination, Planning, and Strategic Initiatives, Office of the Director, NIH, Building 1, Room 260b, Bethesda, MD 20892, *kawazoer@mail.nih.gov.*

Any interested person may file written comments with the committee by forwarding the statement to the Contact Person listed on this notice. The statement should include the name, address, telephone number and when applicable, the business or professional affiliation of the interested person. Information is also available on the Council of Council's home page at *http://dpcpsi.nih.gov/council/.* Where an agenda and proposals to be discussed will be posted before the meeting date.

In the interest of security, NIH has instituted stringent procedures for entrance onto the NIH campus. All visitor vehicles, including taxicabs, hotel, and airport shuttles will be inspected before being allowed on campus. Visitors will be asked to show one form of identification (for example, a government-issued photo ID, driver's license, or passport) and to state the purpose of their visit.

(Catalogue of Federal Domestic Assistance Program Nos. 93.14, Intramural Research Training Award; 93.22, Clinical Research Loan Repayment Program for Individuals from Disadvantaged Backgrounds; 93.232, Loan Repayment Program for Research Generally; 93.39, Academic Research Enhancement Award; 93.936, NIH Acquired Immunodeficiency Syndrome Research Loan Repayment Program; 93.187, Undergraduate Scholarship Program for Individuals from Disadvantaged Backgrounds, National Institutes of Health, HHS)

Dated: September 27, 2012.

Carolyn A. Baum,

Program Analyst, Office of Federal Advisory Committee Policy.

[FR Doc. 2012–24269 Filed 10–2–12; 8:45 am]

BILLING CODE 4140–01–P

DEPARTMENT OF HEALTH AND HUMAN SERVICES

National Institutes of Health

Center for Scientific Review; Notice of Closed Meetings

Pursuant to section 10(d) of the Federal Advisory Committee Act, as amended (5 U.S.C. App.), notice is hereby given of the following meetings.

The meetings will be closed to the public in accordance with the provisions set forth in sections 552b(c)(4) and 552b(c)(6), Title 5 U.S.C., as amended. The grant applications and the discussions could disclose confidential trade secrets or commercial property such as patentable material, and personal information concerning individuals associated with the grant applications, the disclosure of which would constitute a clearly unwarranted invasion of personal privacy.

Name of Committee: Center for Scientific Review Special Emphasis Panel; Small Business: Cardiovascular and Surgical Devices.

Date: October 29, 2012.

Time: 4 p.m. to 5 p.m.

Agenda: To review and evaluate grant applications.

Place: National Institutes of Health, 6701 Rockledge Drive, Bethesda, MD 20892.

Contact Person: Jan Li, Ph.D., MD, Scientific Review Officer, Center for Scientific Review, National Institutes of Health, 6701 Rockledge Drive, Room 5106, Bethesda, MD 20892, 301.435.1049, *lij21@csr.nih.gov*.

Name of Committee: Cardiovascular and Respiratory Sciences Integrated Review Group; Respiratory Integrative Biology and Translational Research Study Section.

Date: October 31, 2012.

Time: 8 a.m. to 6 p.m.

Agenda: To review and evaluate grant applications.

Place: Hyatt Regency Bethesda, One Bethesda Metro Center, 7400 Wisconsin Avenue, Bethesda, MD 20814.

Contact Person: Everett E Sinnett, Ph.D., Scientific Review Officer, Center for Scientific Review, National Institutes of Health, 6701 Rockledge Drive, Room 2178, MSC 7818, Bethesda, MD 20892, (301) 435–1016, *sinnett@nih.gov*.

Name of Committee: Center for Scientific Review Special Emphasis Panel; PAR10–174: International Research Ethics Education and Curriculum Development.

Date: October 31, 2012.

Time: 8 a.m. to 5 p.m.

Agenda: To review and evaluate grant applications.

Place: Residence Inn Bethesda, 7335 Wisconsin Avenue, Bethesda, MD 20814.

Contact Person: Karin F Helmers, Ph.D., Scientific Review Officer, Center for Scientific Review, National Institutes of Health, 6701 Rockledge Drive, Room 3166, MSC 7770, Bethesda, MD 20892. 301–254–9975, *helmersk@csr.nih.gov*.

Name of Committee: Center for Scientific Review Special Emphasis Panel; RFA Panel: HIV International Research Training.

Date: October 31–November 1, 2012.

Time: 8 a.m. to 5 p.m.

Agenda: To review and evaluate grant applications.

Place: Marriott Wardman Park Washington DC Hotel, 2660 Woodley Road, NW., Washington, DC 20008.

Contact Person: Hilary D Sigmon, Ph.D., Scientific Review Officer, Center for Scientific Review, National Institutes of Health, 6701 Rockledge Drive, Room 5216, MSC 7852, Bethesda, MD 20892, (301) 594–6377, *sigmonh@csr.nih.gov*.

Name of Committee: Center for Scientific Review Special Emphasis Panel; Member Conflict: Language and Communication.

Date: October 31–November 1, 2012.

Time: 1 p.m. to 5 p.m.

Agenda: To review and evaluate grant applications.

Place: National Institutes of Health, 6701 Rockledge Drive, Bethesda, MD 20892 (Virtual Meeting).

Contact Person: Mark Lindner, Ph.D., Scientific Review Officer, Center for Scientific Review, National Institutes of Health, 6701 Rockledge Drive, Room 3182, MSC 7770, Bethesda, MD 20892, 301–435–0913, *mark.lindner@csr.nih.gov*.

Name of Committee: Center for Scientific Review Special Emphasis Panel; Member Conflict: Epidemiology and Genetics of Cancer.

Date: October 31, 2012.

Time: 1 p.m. to 5 p.m.

Agenda: To review and evaluate grant applications.

Place: National Institutes of Health, 6701 Rockledge Drive, Bethesda, MD 20892 (Virtual Meeting).

Contact Person: Julia Krushkal, Ph.D., Scientific Review Officer, Center for Scientific Review, National Institutes of Health, 6701 Rockledge Drive, Room 3148, MSC 7770, Bethesda, MD 20892, 301–435–1782, *krushkalj@csr.nih.gov*.

Name of Committee: Center for Scientific Review Special Emphasis Panel; Bioengineering AREA Review.

Date: October 31, 2012.

Time: 2 p.m. to 5 p.m.

Agenda: To review and evaluate grant applications.

Place: National Institutes of Health, 6701 Rockledge Drive, Bethesda, MD 20892, (Telephone Conference Call).

Contact Person: Kee Hyang Pyon, Ph.D., Scientific Review Officer, Center for Scientific Review, National Institutes of Health, 6701 Rockledge Drive, Room 5148, MSC 7806, Bethesda, MD 20892, *pyonkh2@csr.nih.gov*.

Name of Committee: Center for Scientific Review Special Emphasis Panel; Member Conflict: Behavioral Genetics and Epidemiology.

Date: October 31, 2012.

Time: 3 p.m. to 5 p.m.

Agenda: To review and evaluate grant applications.

Place: National Institutes of Health, 6701 Rockledge Drive, Bethesda, MD 20892 (Telephone Conference Call).

Contact Person: Lisa Steele, Ph.D., Scientific Review Officer PSE IRG, Center for Scientific Review, National Institutes of Health, 6701 Rockledge Drive, Room 3139, MSC 7770, Bethesda, MD 20892, 301–594–6594, *steeleln@csr.nih.gov*.

Name of Committee: Center for Scientific Review, Special Emphasis Panel; PAR10–169: Academic Industrial Partnership.

Date: October 31, 2012.

Time: 12 p.m. to 5 p.m.

Agenda: To review and evaluate grant applications.

Place: National Institutes of Health, 6701 Rockledge Drive, Bethesda, MD 20892, (Virtual Meeting).

Contact Person: Malgorzata Klosek, Ph.D., Scientific Review Officer, Center for Scientific Review, National Institutes of Health, 6701 Rockledge Drive, Room 4188, MSC 7849, Bethesda, MD 20892, (301) 435–2211, *klosekm@csr.nih.gov*.

(Catalogue of Federal Domestic Assistance Program Nos. 93.306, Comparative Medicine; 93.333, Clinical Research, 93.306, 93.333, 93.337, 93.393–93.396, 93.837–93.844, 93.846–93.878, 93.892, 93.893, National Institutes of Health, HHS).

Dated: September 27, 2012.

Carolyn A. Baum,

Program Analyst, Office of Federal Advisory Committee Policy.

[FR Doc. 2012–24261 Filed 10–2–12; 8:45 am]

BILLING CODE 4140–01–P

DEPARTMENT OF HEALTH AND HUMAN SERVICES

National Institutes of Health

Center for Scientific Review; Notice of Closed Meeting

Pursuant to section 10(d) of the Federal Advisory Committee Act, as

amended (5 U.S.C. App.), notice is hereby given of the following meeting.

The meeting will be closed to the public in accordance with the provisions set forth in sections 552b(c)(4) and 552b(c)(6), Title 5 U.S.C., as amended. The grant applications and the discussions could disclose confidential trade secrets or commercial property such as patentable material, and personal information concerning individuals associated with the grant applications, the disclosure of which would constitute a clearly unwarranted invasion of personal privacy.

Name of Committee: Center for Scientific Review Special Emphasis Panel; Genomic, Molecular Genetics Variation Studies Using Model Organisms AREA Review.

Date: October 19, 2012.

Time: 2 p.m. to 6 p.m.

Agenda: To review and evaluate grant applications.

Place: National Institutes of Health, 6701 Rockledge Drive, Bethesda, MD 20892, (Telephone Conference Call).

Contact Person: David J Remondini, Ph.D., Scientific Review Officer, Center for Scientific Review, National Institutes of Health, 6701 Rockledge Drive, Room 2210, MSC 7890, Bethesda, MD 20892, 301–435–1038, *remondid@csr.nih.gov*.

(Catalogue of Federal Domestic Assistance Program Nos. 93.306, Comparative Medicine; 93.333, Clinical Research, 93.306, 93.333, 93.337, 93.393–93.396, 93.837–93.844, 93.846–93.878, 93.892, 93.893, National Institutes of Health, HHS)

Dated: September 27, 2012.

Carolyn A. Baum,

Program Analyst, Office of Federal Advisory Committee Policy.

[FR Doc. 2012–24260 Filed 10–2–12; 8:45 am]

BILLING CODE 4140–01–P

DEPARTMENT OF HEALTH AND HUMAN SERVICES

National Institutes of Health

National Institute on Aging; Notice of Closed Meeting

Pursuant to section 10(d) of the Federal Advisory Committee Act, as amended (5 U.S.C. App.), notice is hereby given of the following meeting.

The meeting will be closed to the public in accordance with the provisions set forth in sections 552b(c)(4) and 552b(c)(6), Title 5 U.S.C., as amended. The grant applications and the discussions could disclose confidential trade secrets or commercial property such as patentable material, and personal information concerning individuals associated with the grant applications, the disclosure of which would constitute a clearly unwarranted invasion of personal privacy.

Name of Committee: National Institute on Aging Special Emphasis Panel; Member Conflict.

Date: October 22, 2012.

Time: 1:30 p.m. to 3:30 p.m.

Agenda: To review and evaluate grant applications.

Place: National Institute on Aging, Gateway Building, 7201 Wisconsin Avenue, Suite 2C212, Bethesda, MD 20892.

Contact Person: Ramesh Vemuri, Ph.D., Chief, Scientific Review Branch, National Institute on Aging, National Institutes of Health, 7201 Wisconsin Avenue, Suite 2C–212, Bethesda, MD 20892, 301–402–7700, *rv23r@nih.gov.*

(Catalogue of Federal Domestic Assistance Program Nos. 93.866, Aging Research, National Institutes of Health, HHS)

Dated: September 27, 2012.

Melanie J. Gray,

Program Analyst, Office of Federal Advisory Committee Policy.

[FR Doc. 2012–24259 Filed 10–2–12; 8:45 am]

BILLING CODE 4140–01–P

DEPARTMENT OF HEALTH AND HUMAN SERVICES

National Institutes of Health

National Institute of Arthritis and Musculoskeletal and Skin Diseases; Notice of Closed Meeting

Pursuant to section 10(d) of the Federal Advisory Committee Act, as amended (5 U.S.C. App.), notice is hereby given of the following meeting.

The meeting will be closed to the public in accordance with the provisions set forth in sections 552b(c)(4) and 552b(c)(6), Title 5 U.S.C., as amended. The grant applications and the discussions could disclose confidential trade secrets or commercial property such as patentable material, and personal information concerning individuals associated with the grant applications, the disclosure of which would constitute a clearly unwarranted invasion of personal privacy.

Name of Committee: Arthritis and Musculoskeletal and Skin Diseases Initial Review Group; Arthritis and Musculoskeletal and Skin Diseases Special Grants Review Committee.

Date: October 22–23, 2012.

Time: 8 a.m. to 6 p.m.

Agenda: To review and evaluate grant applications.

Place: Hilton Washington/Rockville, 1750 Rockville Pike, Rockville, MD 20852.

Contact Person: Helen Lin, Ph.D., Scientific Review Officer, NIH/NIAMS/RB, 6701 Democracy Blvd., Suite 800, Plaza One, Bethesda, MD 20817, 301–594–4952, *linh1@mail.nih.gov.*

(Catalogue of Federal Domestic Assistance Program Nos. 93.846, Arthritis, Musculoskeletal and Skin Diseases Research, National Institutes of Health, HHS)

Dated: September 26, 2012.

Carolyn Baum,

Program Analyst, Office of Federal Advisory Committee Policy.

[FR Doc. 2012–24257 Filed 10–2–12; 8:45 am]

BILLING CODE 4140–01–P

DEPARTMENT OF HEALTH AND HUMAN SERVICES

National Institutes of Health

Eunice Kennedy Shriver National Institute of Child Health & Human Development; Notice of Closed Meeting

Pursuant to section 10(d) of the Federal Advisory Committee Act, as amended (5 U.S.C. App.), notice is hereby given of the following meeting.

The meeting will be closed to the public in accordance with the provisions set forth in sections 552b(c)(4) and 552b(c)(6), Title 5 U.S.C., as amended. The grant applications and the discussions could disclose confidential trade secrets or commercial property such as patentable material, and personal information concerning individuals associated with the grant applications, the disclosure of which would constitute a clearly unwarranted invasion of personal privacy.

Name of Committee: National Institute of Child Health and Human Development Special Emphasis Panel.

Date: October 24, 2012.

Time: 2 p.m. to 5 p.m.

Agenda: To review and evaluate grant applications.

Place: National Institutes of Health, 6100 Executive Boulevard, Rockville, MD 20852 (Telephone Conference Call).

Contact Person: Peter Zelazowski, Ph.D., Scientific Review Officer, Division Of Scientific Review, Eunice Kennedy Shriver National Institute of Child Health and Human Development, NIH, 6100 Executive Blvd., Room 5B01, Bethesda, Md 20892, 301–435–6902, *peter.zelazowski@nih.gov*.

(Catalogue of Federal Domestic Assistance Program Nos. 93.864, Population Research; 93.865, Research for Mothers and Children; 93.929, Center for Medical Rehabilitation Research; 93.209, Contraception and Infertility Loan Repayment Program, National Institutes of Health, HHS)

Dated: September 27, 2012.

Michelle Trout,

Program Analyst, Office of Federal Advisory Committee Policy.

[FR Doc. 2012–24256 Filed 10–2–12; 8:45 am]

BILLING CODE 4140–01–P

DEPARTMENT OF HEALTH AND HUMAN SERVICES

National Institutes of Health

National Institute of Environmental Health Sciences Notice of Meeting

Pursuant to section 10(d) of the Federal Advisory Committee Act, as amended (5 U.S.C. App.), notice is hereby given of a meeting of the Board of Scientific Counselors, NIEHS.

The meeting will be open to the public as indicated below, with attendance limited to space available. Individuals who plan to attend and need special assistance, such as sign language interpretation or other reasonable accommodations, should notify the Contact Person listed below in advance of the meeting.

The meeting will be closed to the public as indicated below in accordance with the provisions set forth in section 552b(c)(6), Title 5 U.S.C., as amended for the review, discussion, and evaluation of individual intramural programs and projects conducted by the National Institute of Environmental Health Sciences, including consideration of personnel qualifications and performance, and the competence of individual investigators, the disclosure of which would constitute a clearly unwarranted invasion of personal privacy.

Name of Committee: Board of Scientific Counselors, NIEHS.

Date: November 4–6, 2012.

Closed: November 4, 2012, 7 p.m. to 10 p.m.

Agenda: To review and evaluate programmatic and personnel issues.

Place: Doubletree Guest Suites, 2515 Meridian Parkway, Research Triangle Park, NC 27713.

Open: November 5, 2012, 8:30 a.m. to 11:50 a.m.

Agenda: Scientific Presentations

Place: National Institute of Environmental Health Sciences, Building 101, Rodbell Auditorium, 111 T. W. Alexander Drive, Research Triangle Park, NC 27709.

Closed: November 5, 2012, 11:50 a.m. to 12:35 p.m.

Agenda: To review and evaluate programmatic and personnel issues.

Place: National Institute of Environmental Health Sciences, Building 101, Rodbell Auditorium, 111 T. W. Alexander Drive, Research Triangle Park, NC 27709.

Closed: November 5, 2012, 1:30 p.m. to 2:30 p.m.

Agenda: Poster Session.

Place: National Institute of Environmental Health Sciences, Building 101, Rodbell Auditorium, 111 T. W. Alexander Drive, Research Triangle Park, NC 27709.

Closed: November 5, 2012, 2:45 p.m. to 3:15 p.m.

Agenda: To review and evaluate programmatic and personnel issues.

Place: National Institute of Environmental Health Sciences, Building 101, Rodbell Auditorium, 111 T. W. Alexander Drive, Research Triangle Park, NC 27709.

Open: November 5, 2012, 3:15 p.m. to 4:55 p.m.

Agenda: Scientific Presentations.

Place: National Institute of Environmental Health Sciences, Building 101, Rodbell Auditorium, 111 T. W. Alexander Drive, Research Triangle Park, NC 27709.

Closed: November 5, 2012, 5 p.m. to 5:30 p.m.

Agenda: To review and evaluate programmatic and personnel issues.

Place: National Institute of Environmental Health Sciences, Building 101, Rodbell Auditorium, 111 T. W. Alexander Drive, Research Triangle Park, NC 27709.

Closed: November 5, 2012, 7:30 p.m. to 9:30 p.m.

Agenda: To review and evaluate programmatic and personnel issues.

Place: Doubletree Guest Suites, 2515 Meridian Parkway, Research Triangle Park, NC 27713.

Closed: November 6, 2012, 8:30 a.m. to 9:30 a.m.

Agenda: To review and evaluate programmatic and personnel issues.

Place: National Institute of Environmental Health Sciences, Building 101, Rodbell Auditorium, 111 T. W. Alexander Drive, Research Triangle Park, NC 27709.

Contact Person: William Schrader, Ph.D., Deputy Scientific Director, Division of Intramural Research, National Institute of Environmental Health Sciences, 111 T.W. Alexander Drive, Suite 101, A214, Research Triangle Park, NC 27709.

Any interested person may file written comments with the committee by forwarding the statement to the Contact Person listed on this notice. The statement should include the name, address, telephone number and when applicable, the business or professional affiliation of the interested person.

(Catalogue of Federal Domestic Assistance Program Nos. 93.115, Biometry and Risk Estimation—Health Risks from Environmental Exposures; 93.142, NIEHS Hazardous Waste Worker Health and Safety Training; 93.143, NIEHS Superfund Hazardous Substances—Basic Research and Education; 93.894, Resources and Manpower Development in the Environmental Health Sciences; 93.113, Biological Response to Environmental Health Hazards; 93.114, Applied Toxicological Research and Testing, National Institutes of Health, HHS)

Dated: _____September 27, 2012.

Carolyn A. Baum,

Program Analyst, Office of Federal Advisory Committee Policy.

[FR Doc. 2012–24254 Filed 10–2–12; 8:45 am]

BILLING CODE 4140–01–P

DEPARTMENT OF HEALTH AND HUMAN SERVICES

National Institutes of Health

National Institute of General Medical Sciences Notice of Closed Meeting

Pursuant to section 10(d) of the Federal Advisory Committee Act, as amended (5 U.S.C. App.), notice is hereby given of the following meeting.

The meeting will be closed to the public in accordance with the provisions set forth in sections 552b(c)(4) and 552b(c)(6), Title 5 U.S.C., as amended. The grant applications and the discussions could disclose confidential trade secrets or commercial property such as patentable material, and personal information concerning individuals associated with the grant applications, the disclosure of which would constitute a clearly unwarranted invasion of personal privacy.

Name of Committee: National Institute of General Medical Sciences Initial Review Group; Training and Workforce Development Subcommittee—D.

Date: November 2, 2012.

Time: 8:30 a.m. to 5 p.m.

Agenda: To review and evaluate grant applications.

Place: National Institutes of Health, Building 31, 31 Center Drive, 6C/Room 7, Bethesda, MD 20892.

Contact Person: Rebecca H. Johnson, Ph.D., Scientific Review Officer, Office of Scientific Review, National Institute of General Medical Sciences, National Institutes of Health, 45 Center Drive, Room 3An18C, Bethesda, MD 20892, 301–594–2771, *johnsonrh@nigms.nih.gov*.

(Catalogue of Federal Domestic Assistance Program Nos. 93.375, Minority Biomedical Research Support; 93.821, Cell Biology and Biophysics Research; 93.859, Pharmacology, Physiology, and Biological Chemistry Research; 93.862, Genetics and Developmental Biology Research; 93.88, Minority Access to Research Careers; 93.96, Special Minority Initiatives, National Institutes of Health, HHS)

Dated: September 27, 2012.

Melanie J. Gray,

Program Analyst, Office of Federal Advisory Committee Policy.

[FR Doc. 2012–24252 Filed 10–2–12; 8:45 am]

BILLING CODE 4140–01–P

FEDERAL DEPOSIT INSURANCE CORPORATION

Agency Information Collection Activities: Submission for OMB Review; Comment Request; Registration of Mortgage Loan Originators

AGENCY: Federal Deposit Insurance Corporation (FDIC).

ACTION: Withdrawal of notice and request for comment.

SUMMARY: The FDIC is withdrawing the Notice of Submission for OMB Review; Comment Request; Registration of Mortgage Loan Originators (3064–0171) published in the **Federal Register** on September 27, 2012 (77 FR 59397). The September 27, 2012 publication was an inadvertent duplication of the Notice of Submission for OMB Review; Comment Request; Registration of Mortgage Loan Originators (3064–0171) published in the **Federal Register** on September 26, 2012 (77 FR 59192).

Dated: September 27, 2012.

Federal Deposit Insurance Corporation.

Pamela Johnson,

Regulatory Editing Specialist.

[FR Doc. 2012–24277 Filed 10–2–12; 8:45 am]

BILLING CODE 6714–01–P

DEPARTMENT OF HEALTH AND HUMAN SERVICES

Substance Abuse and Mental Health Services Administration

Current List of Laboratories and Instrumented Initial Testing Facilities Which Meet Minimum Standards To Engage in Urine Drug Testing for Federal Agencies

AGENCY: Substance Abuse and Mental Health Services Administration, HHS.

ACTION: Notice.

SUMMARY: The Department of Health and Human Services (HHS) notifies Federal agencies of the Laboratories and Instrumented Initial Testing Facilities (IITF) currently certified to meet the standards of the Mandatory Guidelines for Federal Workplace Drug Testing Programs (Mandatory Guidelines). The Mandatory Guidelines were first published in the **Federal Register** on April 11, 1988 (53 FR 11970), and subsequently revised in the **Federal Register** on June 9, 1994 (59 FR 29908); September 30, 1997 (62 FR 51118); April 13, 2004 (69 FR 19644); November 25, 2008 (73 FR 71858); December 10, 2008 (73 FR 75122); and on April 30, 2010 (75 FR 22809).

A notice listing all currently certified Laboratories and Instrumented Initial Testing Facilities (IITF) is published in the **Federal Register** during the first week of each month. If any Laboratory/IITF's certification is suspended or revoked, the Laboratory/IITF will be omitted from subsequent lists until such time as it is restored to full certification under the Mandatory Guidelines.

If any Laboratory/IITF has withdrawn from the HHS National Laboratory Certification Program (NLCP) during the past month, it will be listed at the end and will be omitted from the monthly listing thereafter.

This notice is also available on the Internet at *http://www.workplace.samhsa.gov* and *http://www.drugfreeworkplace.gov.*

FOR FURTHER INFORMATION CONTACT: Mrs. Giselle Hersh, Division of Workplace Programs, SAMHSA/CSAP, Room 2–1042, One Choke Cherry Road, Rockville, Maryland 20857; 240–276–2600 (voice), 240–276–2610 (fax).

SUPPLEMENTARY INFORMATION: The Mandatory Guidelines were initially developed in accordance with Executive Order 12564 and section 503 of Public Law 100–71. The ''Mandatory Guidelines for Federal Workplace Drug Testing Programs'', as amended in the revisions listed above, requires strict standards that Laboratories and Instrumented Initial Testing Facilities (IITF) must meet in order to conduct drug and specimen validity tests on urine specimens for Federal agencies.

To become certified, an applicant Laboratory/IITF must undergo three rounds of performance testing plus an on-site inspection. To maintain that certification, a Laboratory/IITF must participate in a quarterly performance testing program plus undergo periodic, on-site inspections.

Laboratories and Instrumented Initial Testing Facilities (IITF) in the applicant stage of certification are not to be considered as meeting the minimum requirements described in the HHS Mandatory Guidelines. A Laboratory/IITF must have its letter of certification from HHS/SAMHSA (formerly: HHS/NIDA) which attests that it has met minimum standards.

In accordance with the Mandatory Guidelines dated November 25, 2008 (73 FR 71858), the following Laboratories and Instrumented Initial Testing Facilities (IITF) meet the minimum standards to conduct drug and specimen validity tests on urine specimens:

Instrumented Initial Testing Facilities (IITF)

None.

Laboratories

ACL Laboratories, 8901 W. Lincoln Ave., West Allis, WI 53227, 414–328–7840/800–877–7016 (Formerly: Bayshore Clinical Laboratory).

ACM Medical Laboratory, Inc., 160 Elmgrove Park, Rochester, NY 14624, 585–429–2264.

Advanced Toxicology Network, 3560 Air Center Cove, Suite 101, Memphis, TN 38118, 901–794–5770/888–290–1150.

Aegis Analytical Laboratories, 345 Hill Ave., Nashville, TN 37210 615–255–2400 (Formerly: Aegis Sciences Corporation, Aegis Analytical Laboratories, Inc.).

Alere Toxicology Services, 1111 Newton St., Gretna, LA 70053, 504–361–8989/800–433–3823 (Formerly: Kroll Laboratory Specialists, Inc., Laboratory Specialists, Inc.).

Alere Toxicology Services, 450 Southlake Blvd., Richmond, VA 23236, 804–378–9130 (Formerly: Kroll Laboratory Specialists, Inc., Scientific Testing Laboratories, Inc.; Kroll Scientific Testing Laboratories, Inc.).

Baptist Medical Center—Toxicology Laboratory, 11401 I–30, Little Rock, AR 72209–7056, 501–202–2783 (Formerly: Forensic Toxicology Laboratory Baptist Medical Center).

Clinical Reference Lab, 8433 Quivira Road, Lenexa, KS 66215–2802, 800–445–6917.

Doctors Laboratory, Inc., 2906 Julia Drive, Valdosta, GA 31602, 229–671–2281.

DrugScan, Inc., P.O. Box 2969, 1119 Mearns Road, Warminster, PA 18974, 215–674–9310.

ElSohly Laboratories, Inc., 5 Industrial Park Drive, Oxford, MS 38655, 662–236–2609.

Gamma-Dynacare Medical Laboratories*, A Division of the Gamma-Dynacare Laboratory Partnership, 245 Pall Mall Street, London, ONT, Canada N6A 1P4, 519–679–1630.

Laboratory Corporation of America Holdings, 7207 N. Gessner Road, Houston, TX 77040, 713–856–8288/800–800–2387.

Laboratory Corporation of America Holdings, 69 First Ave., Raritan, NJ 08869, 908–526–2400/800–437–4986 (Formerly: Roche Biomedical Laboratories, Inc.).

Laboratory Corporation of America Holdings, 1904 Alexander Drive, Research Triangle Park, NC 27709, 919–572–6900/800–833–3984 (Formerly: LabCorp Occupational Testing Services, Inc., CompuChem Laboratories, Inc.; CompuChem Laboratories, Inc., A Subsidiary of Roche Biomedical Laboratory; Roche CompuChem Laboratories, Inc., A Member of the Roche Group).

Laboratory Corporation of America Holdings, 1120 Main Street, Southaven, MS 38671, 866–827–8042/800–233–6339 (Formerly: LabCorp Occupational Testing Services, Inc.; MedExpress/National Laboratory Center).

LabOne, Inc. d/b/a Quest Diagnostics, 10101 Renner Blvd., Lenexa, KS 66219, 913–888–3927/800–873–8845 (Formerly: Quest Diagnostics Incorporated; LabOne, Inc.; Center for Laboratory Services, a Division of LabOne, Inc.,).

Maxxam Analytics*, 6740 Campobello Road, Mississauga, ON, Canada L5N 2L8, 905–817–5700 (Formerly: Maxxam Analytics Inc., NOVAMANN (Ontario), Inc.).

MedTox Laboratories, Inc., 402 W. County Road D, St. Paul, MN 55112, 651–636–7466/800–832–3244.

MetroLab-Legacy Laboratory Services, 1225 NE 2nd Ave., Portland, OR 97232, 503–413–5295/800–950–5295.

Minneapolis Veterans Affairs Medical Center, Forensic Toxicology Laboratory, 1 Veterans Drive, Minneapolis, MN 55417, 612–725–2088.
National Toxicology Laboratories, Inc., 1100 California Ave., Bakersfield, CA 93304, 661–322–4250/800–350–3515.
One Source Toxicology Laboratory, Inc., 1213 Genoa-Red Bluff, Pasadena, TX 77504, 888–747–3774 (Formerly: University of Texas Medical Branch, Clinical Chemistry Division; UTMB Pathology-Toxicology Laboratory).
Pacific Toxicology Laboratories, 9348 DeSoto Ave., Chatsworth, CA 91311, 800–328–6942 (Formerly: Centinela Hospital Airport Toxicology Laboratory).
Pathology Associates Medical Laboratories, 110 West Cliff Dr., Spokane, WA 99204, 509–755–8991/800–541–7891x7.
Phamatech, Inc., 10151 Barnes Canyon Road, San Diego, CA 92121, 858–643–5555.
Quest Diagnostics Incorporated, 1777 Montreal Circle, Tucker, GA 30084, 800–729–6432 (Formerly: SmithKline Beecham Clinical Laboratories; SmithKline Bio-Science Laboratories).
Quest Diagnostics Incorporated, 400 Egypt Road, Norristown, PA 19403, 610–631–4600/877–642–2216 (Formerly: SmithKline Beecham Clinical Laboratories; SmithKline Bio-Science Laboratories).
Quest Diagnostics Incorporated, 8401 Fallbrook Ave., West Hills, CA 91304, 818–737–6370 (Formerly: SmithKline Beecham Clinical Laboratories).
South Bend Medical Foundation, Inc., 530 N. Lafayette Blvd., South Bend, IN 46601, 574–234–4176 x1276.
Southwest Laboratories, 4625 E. Cotton Center Boulevard, Suite 177, Phoenix, AZ 85040, 602–438–8507/800–279–0027.
STERLING Reference Laboratories, 2617 East L Street, Tacoma, Washington 98421, 800–442–0438.
Toxicology & Drug Monitoring Laboratory, University of Missouri Hospital & Clinics, 301 Business Loop 70 West, Suite 208, Columbia, MO 65203, 573–882–1273.
US Army Forensic Toxicology Drug Testing Laboratory, 2490 Wilson St., Fort George G. Meade, MD 20755–5235, 301–677–7085.

*The Standards Council of Canada (SCC) voted to end its Laboratory Accreditation Program for Substance Abuse (LAPSA) effective May 12, 1998. Laboratories certified through that program were accredited to conduct forensic urine drug testing as required by U.S. Department of Transportation (DOT) regulations. As of that date, the certification of those accredited Canadian laboratories will continue under DOT authority. The responsibility for conducting quarterly performance testing plus periodic on-site inspections of those LAPSA-accredited laboratories was transferred to the U.S. HHS, with the HHS' NLCP contractor continuing to have an active role in the performance testing and laboratory inspection processes. Other Canadian laboratories wishing to be considered for the NLCP may apply directly to the NLCP contractor just as U.S. laboratories do.

Upon finding a Canadian laboratory to be qualified, HHS will recommend that DOT certify the laboratory (**Federal Register**, July 16, 1996) as meeting the minimum standards of the Mandatory Guidelines published in the **Federal Register** on April 30, 2010 (75 FR 22809). After receiving DOT certification, the laboratory will be included in the monthly list of HHS-certified laboratories and participate in the NLCP certification maintenance program.

Janine Denis Cook,

Chemist, Division of Workplace Programs, Center for Substance Abuse Prevention, SAMHSA.

[FR Doc. 2012–24212 Filed 10–2–12; 8:45 am]

BILLING CODE 4160–20–P

DEPARTMENT OF HOMELAND SECURITY

Office of the Secretary

Senior Executive Service Performance Review Board

AGENCY: Office of the Secretary, DHS.

ACTION: Notice correction.

SUMMARY: This notice announces the appointment of the members of the Senior Executive Service Performance Review Boards for the Department of Homeland Security. The purpose of the Performance Review Board is to view and make recommendations concerning proposed performance appraisals, ratings, bonuses, pay adjustments, and other appropriate personnel actions for incumbents of Senior Executive Service, Senior Level and Senior Professional positions of the Department.

DATES: *Effective Dates:* This Notice is effective October 3, 2012.

FOR FURTHER INFORMATION CONTACT: Elizabeth Haefeli, Office of the Chief Human Capital Officer, telephone (202) 357–8164.

SUPPLEMENTARY INFORMATION: Each federal agency is required to establish one or more performance review boards (PRB) to make recommendations, as necessary, in regard to the performance of senior executives within the agency. 5 U.S.C. 4314(c). This notice announces the appointment of the members of the PRB for the Department of Homeland Security (DHS). The purpose of the PRB is to review and make recommendations concerning proposed performance appraisals, ratings, bonuses, pay adjustments, and other appropriate personnel actions for incumbents of SES positions within DHS.

The Board shall consist of at least three members. In the case of an appraisal of a career appointee, more than half of the members shall consist of career appointees. Composition of the specific PRBs will be determined on an ad hoc basis from among the individuals listed below:

Acton, John
Alexander, Barbara
Amparo, Alexis
Anderson, Audrey J.
Anderson, Gary L.
Anderson, Rose J.
Andrews, John
Armstrong, Charles R.
Athmann, Ronald
Barber, Delores
Baroukh, Nader
Barrett, Lawerence
Bartoldus, Charles
Bathurst, Donald
Bauhs, Kimberlyn J.
Beagles, James
Beckham, Steward D.
Bedker, Larry
Benda, Francis Paul
Bernstein, Jarrod
Bersin, Alan
Bester, Margot
Borkowski, Mark S.
Borras, Rafael
Boshears, Kevin
Bourbeau, Sharie
Boyce, Carla J.
Boyce, Don R.
Boyd, David
Bray, Robert S.
Brinsfield, Kathryn
Brooks, Vicki
Brown, Meddie
Brown, Michael
Brundage, William
Brzymialkiewicz, Caryl
Bucella, Donna A.
Bucher, Steven P.
Buckingham, Patricia A.
Burke, Richard
Butcher, Michael
Button, Christopher
Byrne, Michael F.
Byrne, Sean J.
Cahill, Donna L.
Callahan, Colleen B.
Cameron, Michael K.
Canton, Lynn G.
Cantor, Jonathan
Carpenter, Dea D.
Carson, Rebecca S.
Carter, Gary
Carusone, Pia
Carwile III, William L.
Castro, Raul
Chaleki, Thomas
Chaparro, James
Chavez, Richard

Chuang, Theodore D.
Clever, Daniel
Coffman, Katherine M.
Cogswell, Patricia
Cohn, Alan
Coleman, Corey J.
Connor, Edward L.
Correa, Soraya
Cotter, Daniel
Covell, Cynthia
Cox, Adam
Crumpacker, Jim
Cummiskey, Chris
Daitch, William
Davis, Delia P.
Dawson, Molly
Dayton, Mark
de Vallance, Brian
Delaney, David G.
DiFalco, Frank
Dinkins, James A.
Dolan, Mark E.
Dorko, Jeffrey J.
Duong, Anh
Durham, Debra
Edge, Peter T.
Edwards, Eric L.
Elias, Richard K.
Emerson, Catherine
Ennis, Eileen
Epstein, Gerald
Eskridge, Gloria
Etzel, Jean A.
Fagerholm, Eric N.
Falk, Scott K.
Farley, Evan T.
Farmer, Robert A.
Fenton, Robert J.
Finegan, Robin A.
Fisher, Michael J.
Flinn, Shawn
Fox, Kathleen M.
Freeman, Beth A.
Frey, Gregory
Gabbrielli, Tina
Gaines, Glenn A.
Gammon, Carla
Garza, Alexander
Gelfer, Elizabeth
Gerstein, David
Gina, Allen
Gowadia, Huban
Grade, Deborah C.
Gramlick, Carl
Graves, Margaret
Griffin, Edward
Grimm, Michael
Gross-Davis, Leslie
Grossman, Seth S.
Gruber, Corey D.
Halinski, John W.
Hall, Christopher J.
Hall, Michael J.
Hardiman, Tara
Havranek, John F.
Heller, Susan J.
Heyman, David
Hill, Alice
Hill, Keith O.
Hill, Mark
Hochman, Kathleen T.
Hoggan, Kelly C.
Holterman, Keith
Houser, Eric
Hylton, Roberto L.
Ileto, Carlene
Ingram, Deborah
Jensen, Robert
Johnson, Daniel
Johnson, Edward H.
Johnson, James
Jones Jr., Berl D.
Jones, Franklin C.
Jones, Keith A.
Jones, Rendell L.
Joseph, Leonard
Kamoie, Brian
Karoly, Stephen
Kauffman, Keith
Kaufman, David J.
Keene, D. Kenneth
Kerner, Francine
Kessler, Tamara
Kielsmeier, Lauren
Kieserman, Brad J.
Kish, James R.
Kopel, Richard
Kostelnik, Michael C.
Koumans, Marnix
Krizay, Glenn
Kroloff, Noah
Kronisch, Matthew L.
Kruger, Mary
Kubiak, Lev J.
Langlois, Joseph E.
Lederer, Calvin M.
Legomsky, Stephen H.
Lew, Kimberly
Lewis, Ashley
Livingston, Kevin S.
Luczko, George P.
Ludtke, Meghan G.
Lumpkins, Donald M.
Lute, Jane Holl
Mabeus, Steve
Maher, Joseph B.
Marcott, Stacey
Markey, Elizabeth
Marshall, Gregory A.
Martoccia, Anthony R.
May, Major P.
McAleenan, Kevin K.
McAllister, Scott
McClain, Ellen
McDonald, Christina E.
McGruder, Richard
McLaughlin, Christopher L.
McLaughlin, Daniel
McNamara, Jason R.
McNamara, Philip
Merritt, Marianna L.
Merritt, Michael P.
Meyer, Jonathan E.
Micone, Vincent
Miller, David L.
Mitchell, Andrew
Monastsero, Benjamin
Monica, Donald J.
Montgomery, Cynthia R.
Moore, Joseph D.
Morrissey, Paul S.
Moynihan, Timothy M.
Murphy, Kenneth D.
Myers, David L.
Myers, Raymond
Napolitano, Janet
Nayak, Nick
Nelson, Mickey M.
Neptun, Daniel A.
Neufeld, Donald W.
Nicholson, David
Nosanchuk, Mathew S.
Novak, Michael R.
O'Connell, Maria Luisa
O'Connor, David J.
O'Connor, Kimberly
Olavarria, Esther
Oliver, Clifford E.
Onieal, Denis G.
Orner, Jeffery
O'Toole, Tara
Palmer, David J.
Parent, Wayne
Paschall, Robert D.
Patel, Nimesh
Patrick, Connie L.
Peacock, Nelson
Pelowski, Gregg
Penn, Damon C.
Philbin, Patrick
Phillips, Sally
Pierson, Julia A.
Pohlman, Teresa
Polk, James
Potts, Michael
Pressman, David
Quijas, Louis
Ragsdale, Daniel H.
Ramanathan, Sue
Ratliff, Gerri L.
Rausch, Sharla
Robles, Alfonso
Roche, William W.
Rogers, Debra
Roy, Donna
Russell, Anthony A.
Russell, Michael
Rynes, Joel
Salazar, Ronald
Sampson, Timothy
Sandweg, John
Saunders, Steve D.
Savastana, Anthony J.
Schied, Eugene H.
Schreiber, Tonya
Scialabba, Lori L.
Sekar, Radha C.
Sevier, Adrian
Shelton Waters, Karen R.
Sherry, Peggy
Shlossman, Amy
Singleton, Kathy
Smiley, Dennis
Smislova, Melissa
Smith, A.T.
Smith, Douglas
Smith, Eric T.

Smith, Gordon
Smith, Jessica A.
Snow, Avie
Spampinato Jr., Francis C.
Spires, Richard
Stallworth, Charles E.
Stanley, Kathleen M.
Stanton, John R.
Stewart, Sharon
Strack, Barbara L.
Stroud, Dennis Michael
Sullivan, Mark
Swain, Donald
Tanner, George
Tarry, William
Tate, Cornelius F.
Taylor, Charles
Teets, Gregory L.
Terry, Anne
Thomas, Rob C.
Tierney, MaryAnn E.
Tomchek, Debra
Tomsheck, James F.
Torrence, Donald
Triner, Donald
Trippie, Keith
Trissell, David A.
Tuttle, James
Velarde, Barbara Q.
Velasquez III, Andrew
Venture, Veronica
Veysey, Anne
Vincent, Peter S.
Wagner, Caryn
Walke, James A.
Walther, Kelli
Walton, Kimberly H.
Ward, Nancy L.
Warrick, Thomas
Williams, Dwight M.
Williams, Gerard J.
Williams, Richard
Winchell, Leigh
Winkowski, Thomas S.
Wisniewski, Leo
Wong, Heather
Woodard, Steven C.
Yeager, Michael J.
Zabko, John
Zeller, Randel
Zimmerman, Elizabeth A.

This notice does not constitute a significant regulatory action under section 3(f) of Executive Order 12866. Therefore, DHS has not submitted this notice to the Office of Management and Budget. Further, because this notice is a matter of agency organization, procedure and practice, DHS is not required to follow the rulemaking requirements under the Administrative Procedure Act (5 U.S.C. 553).

Dated: September 28, 2012.

Shonna R. James,

Director, Executive Resources, Office of the Chief Human Capital Officer.

[FR Doc. 2012–24387 Filed 10–2–12; 8:45 am]

BILLING CODE 9110–9B–P

DEPARTMENT OF HOMELAND SECURITY

Federal Emergency Management Agency

[Docket ID FEMA–2007–0008]

National Advisory Council

AGENCY: Federal Emergency Management Agency, DHS.

ACTION: Committee Management; Notice of Federal Advisory Committee Meeting.

SUMMARY: The National Advisory Council will meet on October 18, 2012, in Arlington, VA. The meeting will be open to the public.

DATES: The National Advisory Council will meet Thursday, October 18, 2012, from 8:30 a.m. to 5:30 p.m. EDT. Please note that the meeting may close early if the committee has completed its business.

ADDRESSES: The meeting will be held at the Key Bridge Marriott at 1401 Lee Highway, Arlington, VA 22201.

For information on facilities or services for individuals with disabilities or to request special assistance at the meeting, contact the Office of the National Advisory Council as soon as possible. See contact information under **FOR FURTHER INFORMATION CONTACT** section below.

To facilitate public participation, members of the public are invited to comment on the issues to be considered by the committee, as listed in the **SUPPLEMENTARY INFORMATION** section. Written comments or requests to make oral presentations must be submitted in writing no later than October 11, 2012 and must be identified by Docket ID FEMA–2007–0008 and may be submitted by *one* of the following methods:

- *Federal eRulemaking Portal: http://www.regulations.gov.* Follow the instructions for submitting comments.
- *Mail/Courier:* Regulatory Affairs Division, Office of Chief Counsel, FEMA, 500 C Street SW., Room 840, Washington, DC 20472–3100.

Instructions: All submissions received must include the words ''Federal Emergency Management Agency'' and the Docket ID FEMA–2007–0008 for this action. Comments received will be posted without alteration at *http://www.regulations.gov,* including any personal information provided.

Docket: For access to the docket to read background documents or comments received by the National Advisory Council, go to *http://www.regulations.gov.*

A public comment period will be held during the meeting from 10:15 a.m. to 10:45 a.m. EDT. Speakers are requested to register in advance, be present and seated by 9:45 a.m. EDT, and limit their comments to 3 minutes. With 3 minutes per speaker, the public comment period is limited to no more than 10 speakers. Please note that the public comment period may end before the time indicated, following the last call for comments. There will also be a brief opportunity for public comment after each subcommittee brief out. Any briefing materials will be posted to the NAC Web site, as they become available. Contact the Office of the National Advisory Council, to register as a speaker.

FOR FURTHER INFORMATION CONTACT: Alexandra Woodruff, Alternate Designated Federal Officer, Office of the National Advisory Council, Federal Emergency Management Agency (Room 825), 500 C Street SW., Washington, DC 20472–3100, telephone (202) 212–4349, fax (540) 504–2331, and email *FEMA–NAC@fema.dhs.gov.* The National Advisory Council Web site is located at: *http://www.fema.gov/national-advisory-council.*

SUPPLEMENTARY INFORMATION: Notice of this meeting is given under the Federal Advisory Committee Act, 5 U.S.C. App. (Pub. L. 92–463). The National Advisory Council (NAC) advises the Administrator of the Federal Emergency Management Agency (FEMA) on all aspects of emergency management. The NAC incorporates State, local, and Tribal governments, and private sector partners' input in the development and revision of FEMA policies and strategies. FEMA's Office of the NAC serves as the focal point for all NAC coordination.

Agenda: The NAC will meet for the purpose of reviewing the progress and/or potential recommendations of its four subcommittees: Preparedness and Protection, Response and Recovery, Public Engagement and Mission Support, and Federal Insurance and Mitigation. New members will be sworn in at the beginning of the meeting, and the Administrator and Deputy Administrator will discuss the general state of FEMA with the members.

The NAC will discuss the National Flood Insurance Program (NFIP) Reform Bill; FEMA's Private Sector Office initiative, the National Business Emergency Operation Center (NBEOC); youth preparedness and engagement; Mid-Level Career Program at the Emergency Management Institute (EMI); the Strategic Foresight Initiative (SFI); the use of specialized international teams in response; and the FEMA Qualification System (FQS). A FEMA

Program Office will brief the NAC on Emerging Topics in Emergency Management during lunch, scheduled for 1 p.m. to 2:15 p.m. EDT.

In 1968, Congress created the National Flood Insurance Program (NFIP) to help provide a way for property owners to financially protect themselves by offering flood insurance if their community participates in the NFIP. Participating communities adopt and enforce ordinances that meet or exceed FEMA requirements to reduce the risk of flooding. FEMA announced the extension of the Preferred Risk Policy eligibility under the NFIP until further notice, as the Agency completes a study and analysis of the Biggert-Waters Flood Insurance Reform Act of 2012, signed into law by President Obama on July 6, 2012. More information can be found at *http://www.floodsmart.gov/floodsmart/pages/about/nfip_overview.jsp*.

FEMA announced the first ever NBEOC under Emergency Support Function (ESF)-15 in the National Response Coordination Center. This NBEOC is envisioned as a groundbreaking new virtual organization that serves as FEMA's clearinghouse for two-way information sharing between public and private sector stakeholders in preparing for, responding to, and recovering from disasters. More information can be found at *http://www.fema.gov/private-sector-1*.

Youth preparedness is a priority at the Federal level. Since fall 2010, FEMA, the U.S. Department of Education and the American Red Cross have been collaborating to empower youth to build a more resilient nation through youth preparedness education. More information on Youth Preparedness Program can be found at *http://www.citizencorps.gov/ready/kids.shtm*.

EMI is the emergency management community's training institution, and provides training to Federal, State, local, Tribal, volunteer, public, and private sector officials to strengthen emergency management core competencies for professional, career-long training. More information on EMI can be found at *http://training.fema.gov/EMI/*.

SFI promotes broader and longer term thinking, how the world is changing and the effects on the emergency management community. Thinking more broadly and over a longer timeframe will help us understand these changes and their potential impacts. More information on SFI can be found at *http://www.fema.gov/about/programs/oppa/strategic_foresight_initiative.shtm*.

In the event that U.S.-based responders are overwhelmed there are constraints on the entry and use of foreign responders due to concerns about liability and licensure issues. There are potential shortfalls in Urban Search and Rescue (US&R) capabilities needed to respond to catastrophic disasters and emphasizing the need to streamline how nations might share this important asset following a catastrophic disaster. More information can be found at *http://usaid.gov/*.

The primary purpose of the FEMA Qualifications System (FQS) is to provide the best possible customer service to survivors and communities working to respond to, recover from, and mitigate against disasters. FQS helps build FEMA's disaster response and recovery capability by providing personnel with the training and experience needed to assume positions of progressively greater responsibility. More information on FQS can be found at *http://www.fema.gov/fema-qualification-system-0*.

W. Craig Fugate,

Administrator, Federal Emergency Management Agency.

[FR Doc. 2012–24320 Filed 10–2–12; 8:45 am]

BILLING CODE 9111–48–P

DEPARTMENT OF HOMELAND SECURITY

U.S. Citizenship and Immigration Services

[OMB Control Number 1615–0076]

Agency Information Collection Activities: Sponsor's Notice of Change of Address, Form Number I–865; Extension, Without Change, of a Currently Approved Collection

ACTION: 30-Day Notice.

SUMMARY: The Department of Homeland Security (DHS), U.S. Citizenship and Immigration Services (USCIS) will be submitting the following information collection request to the Office of Management and Budget (OMB) for review and clearance in accordance with the Paperwork Reduction Act of 1995. The information collection notice was previously published in the **Federal Register** on July 24, 2012, at 77 FR 43345, allowing for a 60-day public comment period. USCIS did not receive any comments in connection with the 60-day notice.

DATES: The purpose of this notice is to allow an additional 30 days for public comments. Comments are encouraged and will be accepted until November 2, 2012. This process is conducted in accordance with 5 CFR 1320.10.

ADDRESSES: Written comments and/or suggestions regarding the item(s) contained in this notice, especially regarding the estimated public burden and associated response time, should be directed to DHS, and to the OMB USCIS Desk Officer. Comments may be submitted to: DHS, USCIS, Office of Policy and Strategy, Chief, Regulatory Coordination Division, 20 Massachusetts Avenue NW., Washington, DC 20529–2020. Comments may also be submitted to DHS via email at *uscisfrcomment@dhs.gov,* to the OMB USCIS Desk Officer via facsimile at 202–395–5806 or via email at *oira_submission@omb.eop.gov* and via the Federal eRulemaking Portal Web site at *http://www.Regulations.gov* under e-Docket ID number USCIS–2007–0007. When submitting comments by email, please make sure to add [Insert OMB Control Number 1615–0076] in the subject box.

All submissions received must include the agency name, OMB Control Number and Docket ID. Regardless of the method used for submitting comments or material, all submissions will be posted, without change, to the Federal eRulemaking Portal at *http://www.regulations.gov,* and will include any personal information you provide. Therefore, submitting this information makes it public. You may wish to consider limiting the amount of personal information that you provide in any voluntary submission you make to DHS. For additional information please read the Privacy Act notice that is available via the link in the footer of *http://www.regulations.gov.*

Note: The address listed in this notice should only be used to submit comments concerning this information collection. Please do not submit requests for individual case status inquiries to this address. If you are seeking information about the status of your individual case, please check ''My Case Status'' online at: *https://egov.uscis.gov/cris/Dashboard.do,* or call the USCIS National Customer Service Center at 1–800–375–5283.

Written comments and suggestions from the public and affected agencies should address one or more of the following four points:

(1) Evaluate whether the proposed collection of information is necessary for the proper performance of the functions of the agency, including whether the information will have practical utility;

(2) Evaluate the accuracy of the agencies estimate of the burden of the proposed collection of information, including the validity of the methodology and assumptions used;

(3) Enhance the quality, utility, and clarity of the information to be collected; and

(4) Minimize the burden of the collection of information on those who are to respond, including through the use of appropriate automated, electronic, mechanical, or other technological collection techniques or other forms of information technology, e.g., permitting electronic submission of responses.

Overview of This Information Collection

(1) *Type of Information Collection Request:* Extension, Without Change, of a Currently Approved Collection.

(2) *Title of the Form/Collection:* Sponsor's Notice of Change of Address.

(3) *Agency form number, if any, and the applicable component of the DHS sponsoring the collection:* USCIS Form I–865; USCIS.

(4) *Affected public who will be asked or required to respond, as well as a brief abstract: Primary:* Individuals or households. This form will be used by every sponsor who has filed an Affidavit of Support under Section 213A of the Immigration and Nationality Act to notify the USCIS of a change of address. The data will be used to locate a sponsor if there is a request for reimbursement.

(5) *An estimate of the total number of respondents and the amount of time estimated for an average respondent to respond:* 100,000 responses at 15 minutes (.25) per response.

(6) *An estimate of the total public burden (in hours) associated with the collection:* 25,000 annual burden hours.

If you need a copy of the information collection instrument with supplementary documents, or need additional information, please visit *http://www.regulations.gov.* We may also be contacted at: USCIS, Office of Policy and Strategy, Regulatory Coordination Division, 20 Massachusetts Avenue NW., Washington, DC 20529–2020; Telephone 202–272–8377.

Dated: September 27, 2012.

Laura Dawkins,

Chief, Regulatory Coordination Division, Office of Policy and Strategy, U.S. Citizenship and Immigration Services, Department of Homeland Security.

[FR Doc. 2012–24298 Filed 10–2–12; 8:45 am]

BILLING CODE 9111–97–P

DEPARTMENT OF THE INTERIOR

Office of the Secretary

Exxon Valdez Oil Spill Public Advisory Committee

AGENCY: Office of the Secretary, Interior.

ACTION: Notice of renewal.

SUMMARY: The U.S. Department of the Interior announces the charter renewal of the *Exxon Valdez* Oil Spill Public Advisory committee.

SUPPLEMENTARY INFORMATION: The Court Order establishing the *Exxon Valdez* Oil Spill Trustee Council also requires a public advisory committee. The *Exxon Valdez* Public Advisory Committee was established to advise the Trustee Council, and began functioning in October 1992. The *Exxon Valdez* Oil Spill Public Advisory Committee consists of 10 members representing the following principal interests: Sport hunting and fishing, conservation and environmental, public-at-large, recreation users, commercial tourism, science/technical, subsistence, commercial fishing, aquaculture and mariculture, and Native landowners.

In order to ensure that a broad range of public viewpoints continues to be available to the *Exxon Valdez* Oil Spill Trustee Council, and in keeping with the settlement agreement, the continuation of the *Exxon Valdez* Public Advisory Committee is recommended.

In accordance with the provisions of the Federal Advisory Committee Act, as amended (5 U.S.C., App. 2), following the recommendation and approval of the *Exxon Valdez* Oil Spill Trustee Council, and in consultation with the General Services Administration, the Secretary of the Interior hereby renews the charter for the *Exxon Valdez* Oil Spill Public Advisory Committee.

FOR FURTHER INFORMATION CONTACT: Douglas Mutter, Department of the Interior, Office of Environmental Policy and Compliance, 1689 ''C'' Street, Room 119, Anchorage, Alaska, (907) 271–5011.

CERTIFICATION STATEMENT: I hereby certify that the renewal of the Charter of the *Exxon Valdez* Oil Spill Public Advisory Committee is necessary and in the public interest in connection with the performance of duties mandated by the settlement of *United States* v. *State of Alaska,* No. A91–081 CV, and is in accordance with the Comprehensive Environmental Response, Compensation and Liability Act of 1980, as amended and supplemented.

Dated: September 25, 2012.

Ken Salazar,

Secretary of the Interior.

[FR Doc. 2012–24319 Filed 10–2–12; 8:45 am]

BILLING CODE 4310–RG–P

DEPARTMENT OF THE INTERIOR

Fish and Wildlife Service

[FWS–HQ–LE–2012–N229; FF09L00200–FX–LE12240900000G2]

Proposed Information Collection; Declaration for Importation or Exportation of Fish or Wildlife

AGENCY: Fish and Wildlife Service, Interior.

ACTION: Notice; request for comments.

SUMMARY: We (U.S. Fish and Wildlife Service) will ask the Office of Management and Budget (OMB) to approve the information collection (IC) described below. As required by the Paperwork Reduction Act of 1995 and as part of our continuing efforts to reduce paperwork and respondent burden, we invite the general public and other Federal agencies to take this opportunity to comment on this IC. This IC is scheduled to expire on March 31, 2013. We may not conduct or sponsor and a person is not required to respond to a collection of information unless it displays a currently valid OMB control number.

DATES: To ensure that we are able to consider your comments on this IC, we must receive them by December 3, 2012.

ADDRESSES: Send your comments on the IC to the Service Information Collection Clearance Officer, U.S. Fish and Wildlife Service, MS 2042–PDM, 4401 North Fairfax Drive, Arlington, VA 22203 (mail); or *INFOCOL@fws.gov* (email). Please include ''1018–0012'' in the subject line of your comments.

FOR FURTHER INFORMATION CONTACT: To request additional information about this IC, contact Hope Grey at (email) or 703–358–2482 (telephone).

SUPPLEMENTARY INFORMATION:

I. Abstract

The Endangered Species Act (16 U.S.C. 1531 *et seq.*) makes it unlawful to import or export fish, wildlife, or plants without filing a declaration or report deemed necessary for enforcing the Act or upholding the Convention on International Trade in Endangered Species (CITES) (see 16 U.S.C. 1538(e)). With a few exceptions, businesses, individuals, or government agencies importing into or exporting from the United States any fish, wildlife, or

wildlife product must complete and submit to the Service an FWS Form 3–177 (Declaration for Importation or Exportation of Fish or Wildlife). This form as well as FWS Form 3–177a (Continuation Sheet) and instructions for completion are available for electronic submission at *https://edecs.fws.gov.* These forms are also available in fillable format at *http://www.fws.gov/forms/.*

The information that we collect is unique to each wildlife shipment and enables us to:

- Accurately inspect the contents of the shipment;
- Enforce any regulations that pertain to the fish, wildlife, or wildlife products contained in the shipment; and
- Maintain records of the importation and exportation of these commodities.

Businesses or individuals must file FWS Forms 3–177 and 3–177a with us at the time and port where they request clearance of the import or export of wildlife or wildlife products. Our regulations allow for certain species of wildlife to be imported or exported between the United States and Canada or Mexico at U.S. Customs and Border Protection ports, even though our wildlife inspectors may not be present. In these instances, importers and exporters may file the forms with U.S. Customs and Border Protection. We collect the following information:

(1) Name of the importer or exporter and broker.

(2) Scientific and common name of the fish or wildlife.

(3) Permit numbers (if permits are required).

(4) Description, quantity, and value of the fish or wildlife.

(5) Natural country of origin of the fish or wildlife.

In addition, certain information, such as the airway bill or bill of lading number, the location of the fish or wildlife for inspection, and the number of cartons containing fish or wildlife, assists our wildlife inspectors if a physical examination of the shipment is necessary

II. Data

OMB Control Number: 1018–0012.

Title: Declaration for Importation or Exportation of Fish or Wildlife, 50 CFR 14.61–14.64.

Service Form Numbers: 3–177 and 3–177a.

Type of Request: Extension of a currently approved collection.

Description of Respondents: Businesses or individuals that import or export fish, wildlife, or wildlife products; scientific institutions that import or export fish or wildlife scientific specimens; and government agencies that import or export fish or wildlife specimens for various purposes.

Respondent's Obligation: Required to obtain or retain a benefit.

Frequency of Collection: On occasion.

Activity	Number of respondents	Number of responses	Completion time per response (minutes)	Total annual burden hours
3–177 hard copy submission	4,200	28,332	15	7,083
3–177 electronic submission	16,500	154,971	10	25,829
Totals	20,700	183,303		32,912

III. Comments

We invite comments concerning this information collection on:

- Whether or not the collection of information is necessary, including whether or not the information will have practical utility;
- The accuracy of our estimate of the burden for this collection of information;
- Ways to enhance the quality, utility, and clarity of the information to be collected; and
- Ways to minimize the burden of the collection of information on respondents.

Comments that you submit in response to this notice are a matter of public record. We will include or summarize each comment in our request to OMB to approve this IC. Before including your address, phone number, email address, or other personal identifying information in your comment, you should be aware that your entire comment, including your personal identifying information, may be made publicly available at any time. While you can ask us in your comment to withhold your personal identifying information from public review, we cannot guarantee that we will be able to do so.

Dated: September 26, 2012.

Tina A. Campbell,

Chief, Division of Policy and Directives Management, U.S. Fish and Wildlife Service.

[FR Doc. 2012–24397 Filed 10–2–12; 8:45 am]

BILLING CODE 4310–55–P

DEPARTMENT OF THE INTERIOR

Fish and Wildlife Service

[FWS–HQ–MB–2012–N227; FXMB1231099BPP0L2–112–FF09M21200]

Information Collection Request Sent to the Office of Management and Budget (OMB) for Approval; Control and Management of Resident Canada Geese

AGENCY: Fish and Wildlife Service, Interior.

ACTION: Notice; request for comments.

SUMMARY: We (U.S. Fish and Wildlife Service) have sent an Information Collection Request (ICR) to OMB for review and approval. We summarize the ICR below and describe the nature of the collection and the estimated burden and cost. This information collection is scheduled to expire on November 30, 2012. We may not conduct or sponsor and a person is not required to respond to a collection of information unless it displays a currently valid OMB control number. However, under OMB regulations, we may continue to conduct or sponsor this information collection while it is pending at OMB.

DATES: You must submit comments on or before November 2, 2012.

ADDRESSES: Send your comments and suggestions on this information collection to the Desk Officer for the Department of the Interior at OMB–OIRA at (202) 395–5806 (fax) or *OIRA_DOCKET@OMB.eop.gov* (email). Please provide a copy of your comments to the Service Information Collection Clearance Officer, U.S. Fish and Wildlife Service, MS 2042–PDM, 4401 North Fairfax Drive, Arlington, VA 22203 (mail), or *INFOCOL@fws.gov* (email). Please include ''1018–0133'' in the subject line of your comments.

FOR FURTHER INFORMATION CONTACT: To request additional information about this ICR, contact Hope Grey at *INFOCOL@fws.gov* (email) or 703–358–2482 (telephone). You may review the ICR online at *http://www.reginfo.gov.*

Follow the instructions to review Department of the Interior collections under review by OMB.

SUPPLEMENTARY INFORMATION:

OMB Control Number: 1018–0133.

Title: Control and Management of Resident Canada Geese, 50 CFR 20.21, 21.49, 21.50, 21.51, 21.52, and 21.61.

Service Form Number: None.

Type of Request: Extension of a currently approved collection.

Description of Respondents: State fish and wildlife agencies, tribes, and local governments; airports; landowners; and farms.

Respondent's Obligation: Required to obtain or retain a benefit.

Frequency of Collection: Annually.

Activity	Number of respondents	Number of responses	Completion time per response	Total annual burden hours *
21.49—Airport Control Order—Annual Report	50	50	1.5 hours	76
21.50—Nest and Egg Depredation Order—Initial Registration	1,000	1,000	30 minutes	500
21.50—Nest and Egg Depredation Order—Renew Registration	3,000	3,000	15 minutes	751
21.50—Nest and Egg Depredation Order—Annual Report	4,000	4,000	15 minutes	1,000
21.51—Agricultural Depredation Order—Recordkeeping	600	600	30 minutes	300
21.51—Agricultural Depredation Order—Annual Report	20	20	8 hours	160
21.52—Public Health Control Order—Annual Report	20	20	1 hour	20
21.49, 21.50, 21.51, and 21.52—Report Take of Endangered Species.	2	2	15 minutes	1
21.61—Population Control Approval Request—Recordkeeping and Annual Report.	8	8	24 hours	192
21.61—Population Control Approval Request—Population Estimates.	8	8	160 hours	1,280
Totals	8,708	8,708		4,280

* rounded.

Abstract: The Migratory Bird Treaty Act prohibits the take, possession, import, export, transport, sale, purchase, or bartering of migratory birds or their parts except as permitted under the terms of a valid permit or as permitted by regulations. In 2006, we issued regulations establishing two depredation orders and three control orders that allow State and tribal wildlife agencies, private landowners, and airports to conduct resident Canada goose population management, including the take of birds. We monitor the data collected for activities under these orders and may rescind an order if monitoring indicates that activities are inconsistent with conservation of Canada geese.

Control order for airports. 50 CFR 21.49 allows managers at commercial, public, and private airports and military airfields and their employees or agents to implement management of resident Canada geese to resolve or prevent threats to public safety. An airport must be part of the National Plan of Integrated Airport Systems and have received Federal grant-in-aid assistance or be a military airfield under the jurisdiction, custody, or control of the Secretary of a military department. Each facility exercising the privileges of the order must submit an annual report with the date, numbers, and locations of birds, nests, and eggs taken.

Depredation order for nests and eggs. 50 CFR 21.50 allows private landowners and managers of public lands to destroy resident Canada goose nests and eggs on property under their jurisdiction provided they register annually on our Web site at *https://epermits.fws.gov/eRCGR.* Registrants must provide basic information, such as name, address, phone number and email, and identify where the control work will occur and who will conduct it. Registrants must return to the Web site to report the number of nests with eggs they destroyed.

Depredation order for agricultural facilities. 50 CFR 21.51 allows States and tribes, via their wildlife agency, to implement a program to allow landowners, operators, and tenants actively engaged in commercial agriculture to conduct damage management control when geese are committing depredations or to resolve or prevent other injury to agricultural interests. State and tribal wildlife agencies in the Atlantic, Central, and Mississippi Flyway portions of 41 States can implement the provisions of the order. Agricultural producers must maintain a log of the date and number of birds taken under this authorization. States and tribes exercising the privileges of the order must submit an annual report of the numbers of birds, nests, and eggs taken and the county where take occurred.

Public health control order. 50 CFR 21.52 authorizes States and tribes of the lower 48 States to conduct (via the State or tribal wildlife agency) resident Canada goose control and management activities when the geese pose a direct threat to human health. States and tribes operating under this order must submit an annual report summarizing activities, including the numbers of birds taken and the county where take occurred.

Population control. 50 CFR 21.61 establishes a managed take program to reduce and stabilize resident Canada goose populations when traditional and otherwise authorized management measures are not successful or feasible. A State or tribal wildlife agency in the Atlantic, Mississippi, or Central Flyway may request approval for this population control program. If approved, the State or tribe may use hunters to harvest resident Canada geese during the month of August. Requests for approval must include a discussion of the State's or tribe's efforts to address its injurious situations using other methods or a discussion of the reasons why the methods are not feasible. If the Service Director approves a request, the State or tribe must (1) keep annual records of activities carried out under the authority of the program, and (2) provide an annual summary, including number of individuals participating in the program and the number of resident Canada geese shot. Additionally, participating States and tribes must monitor the spring breeding population by providing an annual estimate of the breeding population and distribution of resident Canada geese in their State.

Regulations at 50 CFR 21.49, 21.50, 21.51, and 21.52 require that persons or entities operating under the depredation and control orders must immediately report the take of any species protected under the Endangered Species Act (ESA) (21.49(d)(1)). This information ensures that the incidental take limits

authorized under Section 7 of the ESA are not exceeded.

Comments: On May 2, 2012, we published in the **Federal Register** (77 FR 26032) a notice of our intent to request that OMB renew approval for this information collection. In that notice, we solicited comments for 60 days, ending on July 2, 2012. We received one comment from the Wyoming Game and Fish Department (Wyoming) in response to that notice.

Wyoming generally supported the information collection to document and monitor control and management activities for resident Canada geese. However, it did not support the level of detail that we request in the annual reports, stating that it puts an unnecessary burden on respondents and has no practical utility. Although Wyoming does not indicate which of the depredation orders it is referring to, only the control order for resident Canada geese at agricultural facilities (21.51), the public health control order (21.52), and the population control approval request (21.61) involve State agencies. To date, the State of Wyoming has not operated under any of these orders.

The control order for agricultural facilities allows State wildlife agencies and tribes to authorize landowners, operators, and tenants actively engaged in commercial agriculture to conduct direct damage management actions. These entities must maintain records of the date and number of geese and eggs taken and provide it to their agency upon request. The State or tribal agency must provide us with an annual summary of the number of geese, nests, and eggs destroyed broken down by month so we can monitor the overall take of resident Canada geese and the continued use and effectiveness of the regulation.

The public health control order may be implemented by State and tribal wildlife agencies. The State or tribal agency must provide us with an annual summary of the number of geese, nests, and eggs destroyed broken down by county. Very few geese are taken under this order.

The population control order allows States and tribes to designate participants to act as their agents under this order. The State or tribe must keep records of the following information and provide an annual summary to us: (1) The number of individuals participating in the program; (2) the number of days individuals participated in the program; (3) the total number of resident Canada geese shot and retrieved; and (4) the number shot but not retrieved.

Overall, we agree that the most important information the Service and States need to monitor these populations is the number of geese, nests, and eggs destroyed and the population status. However, the general time and location of any geese taken under the various depredation and control orders provides valuable insight and ongoing review of the regulations' continued effectiveness, or lack thereof. For example, we would expect that over time the numbers of geese taken with the various orders should trend downward, especially in locations where they are continually implemented. Further, the information helps us determine whether the existing regulations should be revised or expanded due to changing conditions, population status, or new conflicts. We would readily consider any potential changes in the existing regulations if information warranted such changes and have made minor revisions and clarifications to the regulations since their promulgation.

Lastly, Wyoming commented that our 60-day **Federal Register** notice should have stated that State agencies may require State permits in order for (1) airports to operate under the control order for resident Canada geese at airports and military airfields (21.49), and (2) landowners to take nests and eggs under the nest and egg depredation order (21.50). Although we do not state this in the **Federal Register** notice for this information collection, that point is made clear in the regulations for these orders.

We did not make any changes to our information collection requirements based on the above comments.

We again invite comments concerning this information collection on:

- Whether or not the collection of information is necessary, including whether or not the information will have practical utility;
- The accuracy of our estimate of the burden for this collection of information;
- Ways to enhance the quality, utility, and clarity of the information to be collected; and
- Ways to minimize the burden of the collection of information on respondents.

Comments that you submit in response to this notice are a matter of public record. Before including your address, phone number, email address, or other personal identifying information in your comment, you should be aware that your entire comment, including your personal identifying information, may be made publicly available at any time. While you can ask OMB in your comment to withhold your personal identifying information from public review, we cannot guarantee that it will be done.

Dated: September 26, 2012.

Tina A. Campbell,

Chief, Division of Policy and Directives Management, U.S. Fish and Wildlife Service.

[FR Doc. 2012–24398 Filed 10–2–12; 8:45 am]

BILLING CODE 4310–55–P

DEPARTMENT OF THE INTERIOR

Fish and Wildlife Service

[FWS–R3–ES–2012–N225; FXES11120300000F2–123–FF03E00000]

Draft Midwest Wind Energy Multi-Species Habitat Conservation Plan Within Eight-State Planning Area; Reopening of Comment Period

AGENCY: Fish and Wildlife Service, Interior.

ACTION: Reopening of public comment period.

SUMMARY: We, the U.S. Fish and Wildlife Service (Service), advise the public that we, in coordination with our planning partners, are reopening the public comment period for receipt of comments pertaining to the development of the Midwest Wind Energy Multi-Species Habitat Conservation Plan.

DATES: To ensure consideration, we request written comments on or before December 3, 2012.

ADDRESSES: Send your comments or request information by any one of the following methods:

U.S. mail: Regional Director, Attn: Rick Amidon, U.S. Fish and Wildlife Service, Ecological Services, 5600 American Blvd. West, Suite 990, Bloomington, MN 55437–1458;

Facsimile: 612–713–5292 (Attn: Rick Amidon); or

Email: midwestwindhcp@fws.gov.

FOR FURTHER INFORMATION CONTACT: Rick Amidon, (612) 713–5164.

SUPPLEMENTARY INFORMATION: On August 30, 2012 (77 FR 52754), we, the U.S. Fish and Wildlife Service (Service), published a **Federal Register** notice to advise the public that we, in coordination with our planning partners, intend to prepare the Midwest Wind Energy Multi-Species Habitat Conservation Plan (MSHCP) under the Endangered Species Act of 1973, as amended (ESA). The notice also opened a 30-day public comment period, which ended October 1, 2012. With this notice, we are reopening the public comment period an additional 60 days. More

information pertaining to this planning effort can be found in the original notice.

Public Comments

You may submit your comments and supporting documentation by any of the methods described in **ADDRESSES**, above.

We are requesting information and comment from interested government agencies, Native American Tribes, the scientific community, industry, or other interested parties concerning the planning process, our permitting approach, biological aspects of the interaction of wind facilities and species, scientific data that may help inform the MSHCP or monitoring of impacts, and any other information that interested parties would like to offer.

Please note that comments merely stating support for, or opposition to, the MSHCP under consideration without providing supporting information, although noted, will not provide information useful in determining relevant issues and impacts. The public will receive additional opportunity to provide comments on the draft EIS and draft MSHCP when they are completed. The Service will solicit comments by publishing notice in the **Federal Register**.

Public Availability of Comments

Before including your address, phone number, email address, or other personal identifying information in your comments, you should be aware that your entire comment—including your personal identifying information—may be made publicly available at any time. While you can ask us in your comment to withhold your personal identifying information from public review, we cannot guarantee that we will be able to do so.

Dated: September 18, 2012.

Lynn Lewis,

Assistant Regional Director, Ecological Services, Midwest Region.

[FR Doc. 2012–24401 Filed 10–2–12; 8:45 am]

BILLING CODE 4310–55–P

DEPARTMENT OF THE INTERIOR

Bureau of Land Management

[LLMTB072000–L14300000–ET0000; MTM 98499]

Public Land Order No. 7803; Withdrawal of Public Lands for the Limestone Hills Training Area; MT

AGENCY: Bureau of Land Management, Interior.

ACTION: Public Land Order.

SUMMARY: This order withdraws approximately 18,760.63 acres of public land from all forms of appropriation under the public land laws, including the United States mining laws, but not from leasing under the mineral leasing laws, for a period of 5 years. This withdrawal will protect the Limestone Hills Training Area in Broadwater County near Townsend, Montana, pending the processing of an Engle Act legislative withdrawal application.

DATES: *Effective Date:* September 25, 2012.

FOR FURTHER INFORMATION CONTACT: Mike Wyatt, Bureau of Land Management, Butte Field Office, 406–533–7619, *mswyatt@blm.gov* or Deborah Sorg, Bureau of Land Management, Montana State Office at 406–896–5045, *dsorg@blm.gov*. Persons who use a telecommunications device for the deaf (TDD) may call the Federal Information Relay Service (FIRS) at 1–800–877–8339 to contact either of the above individuals. The FIRS is available 24 hours a day, 7 days a week, to leave a message or question with either of the above individuals. You will receive a reply during normal business hours.

SUPPLEMENTARY INFORMATION: The Limestone Hills Training Area withdrawal will maintain the current surface uses, including a military training range for the Montana Army National Guard, pending the processing of an application for withdrawal of these lands for military purposes under the Engle Act.

Order

By virtue of the authority vested in the Secretary of the Interior by Section 204 of the Federal Land Policy and Management Act of 1976, 43 U.S.C. 1714, it is ordered as follows:

1. Subject to valid existing rights, the following described public land is hereby withdrawn from all forms of appropriation under the public land laws, including location and entry under the United States mining laws (30 U.S.C. Ch. 2), but not from leasing under the mineral leasing laws, pending the processing of an Engle Act withdrawal application.

Principal Meridian, Montana

T. 6 N., R. 1 E.,
- Sec. 2, lots 1 to 4, inclusive, S½N½, N½SW¼, SE¼SW¼, and SE¼;
- Sec. 3, lots 1 to 4, inclusive, S½N½, and S½;
- Sec. 4, lots 1 to 4, inclusive, S½N½, and S½;
- Sec. 5, lots 1 and 2, S½NE¼, and SE¼;
- Sec. 8, E½ and E½SW¼;
- Sec.. 9 and 10;
- Sec. 11, E½, E½W½, and SW¼SW¼;
- Sec. 12, lots 1 to 4, inclusive, W½E½, and W½;
- Sec. 13, lots 1 to 4, inclusive, W½E½, and W½;
- Sec.. 14 and 15;
- Sec. 17, E½ and E½W½;
- Sec. 20, E½ and E½W½;
- Sec. 21;
- Sec. 22, lots 3 and 4, W½NW¼, and S½SW¼;
- Sec. 23;
- Sec. 24, lots 1 to 4, inclusive, W½E½, and W½;
- Sec. 25, lots 1 to 4, inclusive, W½E½, and W½;
- Sec. 26;
- Sec. 27, lots l to 9, inclusive, NE¼NE¼, S½NE¼, and SE¼;
- Sec. 28, lots 1 to 4, inclusive, N½NE¼, W½, and W½SE¼;
- Sec. 29, NE¼, E½NW¼, NE¼SW¼, N½SE¼, and SW¼SE¼;
- Sec. 33, E½;
- Sec. 34, lots l to 8, inclusive, NE¼, N½NW¼, and N½SE¼;
- Sec. 35, lots 1 to 4, inclusive, N½, and N½S½.

T. 6 N., R. 2 E.,
- Sec. 17, S½SW¼;
- Sec. 18, lot 4, SE¼SW¼, and S½SE¼;
- Sec. 19, lots 1, 2, and 3;
- Sec. 20, W½;
- Sec. 30, lots 2, 3, and 4, NE¼NE¼, S½NE¼, SE¼NW¼, E½SW¼, and SE¼.

T. 7 N., R. 1 E.,
- Sec. 26, S½;
- Sec. 27, lots 5 to 8, inclusive, and S½S½;
- Sec. 28, S½SE¼;
- Sec. 32, E½ except patented lands;
- Sec. 33, 34, and 35.

The area described contains 18,760.63 acres in Broadwater County.

2. The withdrawal made by this order does not alter the applicability of those public land laws governing the use of the land under lease, license, or permit, or governing the disposal of the mineral or vegetative resources other than under the mining laws.

3. This withdrawal will expire 5 years from the effective date of this order, unless, as a result of a review conducted before the expiration date pursuant to Section 204(f) of the Federal Land Policy and Management Act, 43 U.S.C. 1714(f), the Secretary determines that the withdrawal shall be extended.

Dated: September 25, 2012.

Rhea S. Suh,

Assistant Secretary—Policy, Management and Budget.

[FR Doc. 2012–24415 Filed 10–2–12; 8:45 am]

BILLING CODE 1430–DN–P

DEPARTMENT OF THE INTERIOR

Office of Surface Mining Reclamation and Enforcement

Notice of Proposed Information Collection; Request for Comments

AGENCY: Office of Surface Mining Reclamation and Enforcement.

ACTION: Notice and request for comments.

SUMMARY: In compliance with the Paperwork Reduction Act of 1995, the Office of Surface Mining Reclamation and Enforcement (OSM) is announcing its intention to seek renewed approval for the collection of information for permits and permit processing. This information collection will also seek approval to collect permit processing fees approved under OSM regulations.

DATES: Comments on the proposed information collection must be received by December 3, 2012, to be assured of consideration.

ADDRESSES: Comments may be mailed to John A. Trelease, Office of Surface Mining Reclamation and Enforcement, 1951 Constitution Ave. NW., Room 203–SIB, Washington, DC 20240. Comments may also be submitted electronically to *jtrelease@osmre.gov.*

FOR FURTHER INFORMATION CONTACT: To receive a copy of the information collection request contact John A. Trelease, at (202) 208–2783 or at the email address listed in **ADDRESSES**.

SUPPLEMENTARY INFORMATION: The Office of Management and Budget (OMB) regulations at 5 CFR 1320, which implement provisions of the Paperwork Reduction Act of 1995 (Pub. L. 104–13), require that interested members of the public and affected agencies have an opportunity to comment on information collection and recordkeeping activities [see 5 CFR 1320.8(d)]. This notice identifies an information collection that OSM will be submitting to OMB for extension. This collection is contained in 30 CFR Part 773—Requirements for permits and permit processing. OSM is including in this collection a request for OMB approval to collect processing fees for new permits in Federal program states and on Indian lands codified in 30 CFR 736.25 and 750.25.

OSM has revised burden estimates, where appropriate, to reflect current reporting levels or adjustments based on reestimates of burden or respondents. OSM will request a 3-year term of approval for the information collection activity.

Comments are invited on: (1) The need for the collection of information for the performance of the functions of the agency; (2) the accuracy of the agency's burden estimates; (3) ways to enhance the quality, utility and clarity of the information collection; and (4) ways to minimize the information collection burden on respondents, such as use of automated means of collection of the information. A summary of the public comments will be included in OSM's submissions of the information collection requests to OMB.

Before including your address, phone number, email address, or other personal identifying information in your comment, you should be aware that your entire comment—including your personal identifying information—may be made publicly available at any time. While you can ask us in your comment to withhold your personal identifying information from public review, we cannot guarantee that we will be able to do so.

Title: 30 CFR Part 773—Requirements for Permits and Permit Processing.

OMB Control Number: 1029–0115.

Summary: The collection activities for this Part ensure that the public has the opportunity to review permit applications prior to their approval, and that applicants for permanent program permits or their associates who are in violation of the Surface Mining Control and Reclamation Act do not receive surface coal mining permits pending resolution of their violations. This collection request includes the submission of processing fees authorized by 30 CFR 736.25 and 750.25 in Federal program states and on Indian lands, respectively.

Bureau Form Number: None.

Frequency of Collection: Once.

Description of Respondents: Applicants for surface coal mining and reclamation permits and State governments and Indian Tribes.

Total Annual Respondents: 892 coal mining applicants and 24 regulatory authorities.

Total Annual Burden Hours: 38,442.

Total Annual Non-Wage Cost Burden: $85,600.

Dated: September 26, 2012.

Andrew F. DeVito,

Chief Division of Regulatory Support.

[FR Doc. 2012–24233 Filed 10–2–12; 8:45 am]

BILLING CODE 4310–05–M

DEPARTMENT OF THE INTERIOR

Office of Surface Mining Reclamation and Enforcement

Notice of Proposed Information Collection; Request for Comments

AGENCY: Office of Surface Mining Reclamation and Enforcement.

ACTION: Notice and request for comments.

SUMMARY: In compliance with the Paperwork Reduction Act of 1995, the Office of Surface Mining Reclamation and Enforcement (OSM) is announcing its intention to request approval to continue the collection of information for its Permanent Program Inspection and Enforcement Procedures. This information collection activity was previously approved by the Office of Management and Budget (OMB), and assigned control number 1029–0051.

DATES: Comments on the proposed information collection activities must be received by December 3, 2012, to be assured of consideration.

ADDRESSES: Comments may be mailed to John Trelease, Office of Surface Mining Reclamation and Enforcement, 1951 Constitution Ave. NW., Room 203–SIB, Washington, DC 20240. Comments may also be submitted electronically to *jtrelease@osmre.gov.*

FOR FURTHER INFORMATION CONTACT: To request additional information about this collection of information, contact John Trelease, at (202) 208–2783 or by email listed in **ADDRESSES**.

SUPPLEMENTARY INFORMATION: OMB regulations at 5 CFR 1320, which implement provisions of the Paperwork Reduction Act of 1995 (Pub. L. 104–13), require that interested members of the public and affected agencies have an opportunity to comment on information collection and recordkeeping activities [see 5 CFR 1320.8(d)]. This notice identifies an information collection that OSM will be submitting to OMB for renewed approval. The collection is contained in 30 CFR Part 840—Permanent Program Inspection and Enforcement Procedures. OSM will request a 3-year term of approval for each information collection activity.

Comments are invited on: (1) The need for the collection of information for the performance of the functions of the agency; (2) the accuracy of the agency's burden estimates; (3) ways to enhance the quality, utility and clarity of the information collection; and (4) ways to minimize the information collection burden on respondents, such as use of automated means of collection

of the information. A summary of the public comments will accompany OSM's submission of the information collection request to OMB.

Before including your address, phone number, email address, or other personal identifying information in your comment, you should be aware that your entire comment—including your personal identifying information—may be made publicly available at any time. While you can ask us in your comment to withhold your personal identifying information from public review, we cannot guarantee that we will be able to do so.

Title: 30 CFR Part 840—Permanent Program Inspection and Enforcement Procedures.

OMB Control Number: 1029–0051.

Abstract: This provision requires the regulatory authority to conduct periodic inspections of coal mining activities, and prepare and maintain inspection reports and other related documents for OSM and public review. This information is necessary to meet the requirements of the Surface Mining Control and Reclamation Act of 1977 and its public participation provisions. Public review assures the public that the State is meeting the requirements for the Act and approved State regulatory program.

Bureau Form Number: None.

Frequency of Collection: Once and annually.

Description of Respondents: State Regulatory Authorities.

Total Annual Responses: 106,382.

Total Annual Burden Hours: 748,140.

Dated: September 27, 2012.

Andrew F. DeVito,

Chief Division of Regulatory Support.

[FR Doc. 2012–24237 Filed 10–2–12; 8:45 am]

BILLING CODE 4310–05–M

INTERNATIONAL TRADE COMMISSION

[Investigation Nos. 701–TA–490 and 731–TA–1204 (Preliminary)]

Hardwood Plywood From China: Institution of Antidumping and Countervailing Duty Investigations and Scheduling of Preliminary Phase Investigations

AGENCY: United States International Trade Commission.

ACTION: Notice.

SUMMARY: The Commission hereby gives notice of the institution of investigations and commencement of preliminary phase antidumping and countervailing duty investigations Nos. 701–TA–490 and 731–TA–1204 (Preliminary) under sections 703(a) and 733(a) of the Tariff Act of 1930 (19 U.S.C. 1671b(a) and 1673b(a)) (the Act) to determine whether there is a reasonable indication that an industry in the United States is materially injured or threatened with material injury, or the establishment of an industry in the United States is materially retarded, by reason of imports from China of hardwood plywood, provided for in subheadings 4412.10; 4412.31; 4412.32; 4412.39; 4412.94; and 4412.99 of the Harmonized Tariff Schedule of the United States, that are alleged to be sold in the United States at less than fair value and alleged to be subsidized by the Government of China. Unless the Department of Commerce extends the time for initiation pursuant to sections 702(c)(1)(B) or 732(c)(1)(B) of the Act (19 U.S.C. 1671a(c)(1)(B) or 1673a(c)(1)(B)), the Commission must reach a preliminary determination in antidumping and countervailing duty investigations in 45 days, or in this case by November 13, 2012. The Commission's views are due at Commerce within five business days thereafter, or by November 19, 2012.

For further information concerning the conduct of these investigations and rules of general application, consult the Commission's Rules of Practice and Procedure, part 201, subparts A through E (19 CFR part 201), and part 207, subparts A and B (19 CFR part 207).

DATES: *Effective Date:* September 27, 2012.

FOR FURTHER INFORMATION CONTACT: Fred Ruggles (202–205–3187 or *fred.ruggles@usitc.gov*), Office of Investigations, U.S. International Trade Commission, 500 E Street SW., Washington, DC 20436. Hearing-impaired persons can obtain information on this matter by contacting the Commission's TDD terminal on 202–205–1810. Persons with mobility impairments who will need special assistance in gaining access to the Commission should contact the Office of the Secretary at 202–205–2000. General information concerning the Commission may also be obtained by accessing its internet server (*http://www.usitc.gov*). The public record for these investigations may be viewed on the Commission's electronic docket (EDIS) at *http://edis.usitc.gov.*

SUPPLEMENTARY INFORMATION:

Background.—These investigations are being instituted in response to a petition filed on September 27, 2012, by Columbia Forest Products, Greensboro, NC; Commonwealth Plywood Co., Ltd., Whitehall, NY; Murphy Plywood, Eugene, OR; Roseburg Forest Products Co., Roseburg, OR; States Industries LLC, Eugene, OR; and Timber Products Company, Springfield, OR, combined as *The Coalition for Fair Trade of Hardwood Plywood.*

Participation in the investigations and public service list.—Persons (other than petitioners) wishing to participate in the investigations as parties must file an entry of appearance with the Secretary to the Commission, as provided in sections 201.11 and 207.10 of the Commission's rules, not later than seven days after publication of this notice in the **Federal Register**. Industrial users and (if the merchandise under investigation is sold at the retail level) representative consumer organizations have the right to appear as parties in Commission antidumping and countervailing duty investigations. The Secretary will prepare a public service list containing the names and addresses of all persons, or their representatives, who are parties to these investigations upon the expiration of the period for filing entries of appearance.

Limited disclosure of business proprietary information (BPI) under an administrative protective order (APO) and BPI service list.—Pursuant to section 207.7(a) of the Commission's rules, the Secretary will make BPI gathered in these investigations available to authorized applicants representing interested parties (as defined in 19 U.S.C. 1677(9)) who are parties to the investigations under the APO issued in the investigations, provided that the application is made not later than seven days after the publication of this notice in the **Federal Register**. A separate service list will be maintained by the Secretary for those parties authorized to receive BPI under the APO.

Conference.—The Commission's Director of Investigations has scheduled a conference in connection with these investigations for 9:30 a.m. on October 18, 2012, at the U.S. International Trade Commission Building, 500 E Street SW., Washington, DC. Requests to appear at the conference should be filed with the Office of the Secretary (*William.Bishop@usitc.gov* and *Sharon.Bellamy@usitc.gov*) on or before October 16, 2012. Parties in support of the imposition of countervailing and antidumping duties in these investigations and parties in opposition to the imposition of such duties will each be collectively allocated one hour within which to make an oral presentation at the conference. A nonparty who has testimony that may aid the Commission's deliberations may

request permission to present a short statement at the conference.

Written submissions.—As provided in sections 201.8 and 207.15 of the Commission's rules, any person may submit to the Commission on or before October 23, 2012, a written brief containing information and arguments pertinent to the subject matter of the investigations. Parties may file written testimony in connection with their presentation at the conference no later than three days before the conference. If briefs or written testimony contain BPI, they must conform with the requirements of sections 201.6, 207.3, and 207.7 of the Commission's rules. Please be aware that the Commission's rules with respect to electronic filing have been amended. The amendments took effect on November 7, 2011. See 76 FR 61937 (Oct. 6, 2011) and the newly revised Commission's Handbook on E-Filing, available on the Commission's Web site at *http://edis.usitc.gov.*

In accordance with sections 201.16(c) and 207.3 of the rules, each document filed by a party to the investigations must be served on all other parties to the investigations (as identified by either the public or BPI service list), and a certificate of service must be timely filed. The Secretary will not accept a document for filing without a certificate of service.

Authority: These investigations are being conducted under authority of title VII of the Tariff Act of 1930; this notice is published pursuant to section 207.12 of the Commission's rules.

By order of the Commission.

Issued: September 27, 2012.

Lisa R. Barton,

Acting Secretary to the Commission.

[FR Doc. 2012–24286 Filed 10–2–12; 8:45 am]

BILLING CODE 7020–02–P

DEPARTMENT OF JUSTICE

Notice of Lodging of Proposed Consent Decree Under the Clean Water Act

On September 27, 2012, the Department of Justice lodged a proposed a consent decree with the United States District Court for the District of Maryland in the lawsuit entitled *United States* v. *BP Products North America, Inc.,* Civil Action No. 1:12–cv–2886.

The United States filed this lawsuit under the Clean Water Act. The United States' complaint seeks injunctive relief and civil penalties for violations of the regulations that govern preparations for responding to oil spills at the defendant's petroleum terminal in Curtis Bay, Maryland. The consent decree requires the defendant to perform injunctive relief and pay a $210,000 civil penalty.

The publication of this notice opens a period for public comment on the consent decree. Comments should be addressed to the Assistant Attorney General, Environment and Natural Resources Division, and should refer to *United States* v. *BP Products North America, Inc.,* D.J. Ref. No. 90–5–1–1–08982. All comments must be submitted no later than thirty (30) days after the publication date of this notice. Comments may be submitted either by email or by mail:

To submit comments:	Send them to:
By email	*pubcomment-ees.enrd@usdoj.gov.*
By mail	Assistant Attorney General, U.S. DOJ—ENRD, P.O. Box 7611, Washington, DC 20044–7611.

During the public comment period, the consent decree may be examined and downloaded at this Justice Department Web site: *http://www.usdoj.gov/enrd/Consent_Decrees.html.* We will provide a paper copy of the consent decree upon written request and payment of reproduction costs. Please mail your request and payment to: Consent Decree Library, U.S. DOJ—ENRD, P.O. Box 7611, Washington, DC 20044–7611.

Please enclose a check or money order for $14.00 (25 cents per page reproduction cost) payable to the United States Treasury.

Robert Brook,

Assistant Section Chief, Environmental Enforcement Section, Environment and Natural Resources Division.

[FR Doc. 2012–24284 Filed 10–2–12; 8:45 am]

BILLING CODE 4410–15–P

DEPARTMENT OF JUSTICE

Antitrust Division

United States v. Standard Parking Corporation, KSPC Holdings, Inc. and Central Parking Corporation; Proposed Final Judgment and Competitive Impact Statement

Notice is hereby given pursuant to the Antitrust Procedures and Penalties Act, 15 U.S.C. 16(b)–(h), that a proposed Final Judgment, Stipulation, and Competitive Impact Statement have been filed with the United States District Court for the District of Columbia in *United States of America* v. *Standard Parking Corporation, et al.,* Civil Action No. 1:12–cv–01598–RJL. On September 26, 2012, the United States filed a Complaint alleging that the proposed acquisition by Standard Parking Corporation of the parking business of KCPC Holdings, Inc., including its wholly owned subsidiary Central Parking Corporation, would violate Section 7 of the Clayton Act, 15 U.S.C. § 18. The proposed Final Judgment, filed at the same time as the Complaint, requires Standard Parking Corporation, KCPC Holdings, Inc. and Central Parking Corporation to divest certain parking facilities in Atlanta, Georgia; Baltimore, Maryland; Bellevue, Washington; Boston, Massachusetts; Bronx, New York City, New York; Charlotte, North Carolina; Chicago, Illinois; Cleveland, Ohio; Columbus, Ohio; Dallas, Texas; Denver, Colorado; Fort Meyers, Florida; Fort Worth, Texas; Hoboken, New Jersey; Houston, Texas; Kansas City, Missouri; Los Angeles, California; Miami, Florida; Milwaukee, Wisconsin; Minneapolis, Minnesota; Nashville, Tennessee; Newark, New Jersey; New Orleans, Louisiana; Philadelphia, Pennsylvania; Phoenix, Arizona; Rego Park, New York City, New York; Richmond, Virginia; Sacramento, California; and Tampa, Florida.

Copies of the Complaint, proposed Final Judgment and Competitive Impact Statement are available for inspection at the Department of Justice, Antitrust Division, Antitrust Documents Group, 450 Fifth Street NW., Suite 1010, Washington, DC 20530 (telephone: 202–514–2481), on the Department of Justice's Web site at *http://www.usdoj.gov/atr,* and at the Office of the Clerk of the United States District Court for the District of Columbia. Copies of these materials may be obtained from the Antitrust Division upon request and payment of the copying fee set by Department of Justice regulations.

Public comment is invited within 60 days of the date of this notice. Such comments, including the name of the submitter, and responses thereto, will be posted on the U.S. Department of Justice, Antitrust Division's internet Web site, filed with the Court and, under certain circumstances, published in the **Federal Register**. Comments should be directed to Scott A. Scheele, Chief, Telecommunications and Media Section, Antitrust Division, Department of Justice, Washington, DC 20530, (telephone: 202–514–5621).

Patricia A. Brink,

Director of Civil Enforcement.

UNITED STATES DISTRICT COURT
FOR THE DISTRICT OF COLUMBIA

UNITED STATES OF AMERICA United States Department of Justice Antitrust Division 450 Fifth Street NW., Suite 7000 Washington, DC 20530, Plaintiff v. STANDARD PARKING CORPORATION 900 N. Michigan Avenue, Suite 1600 Chicago, Illinois 60611–1542 KCPC HOLDINGS, INC. c/o Kohlberg & Company 111 Radio Circle Mt. Kisco, New York 10549 and CENTRAL PARKING CORPORATION 2401 21st Avenue South, Suite 200 Nashville, Tennessee 37212, Defendants	Case no. 1:12–cv–01598

COMPLAINT

The United States of America (''United States''), acting under the direction of the Attorney General of the United States, brings this civil antitrust action against Defendants Standard Parking Corporation (''Standard''), and KCPC Holdings, Inc., including its wholly owned subsidiary, Central Parking Corporation (together, ''Central''), to enjoin Standard's proposed acquisition of Central. The United States alleges as follows:

I. NATURE OF THE ACTION

1. Pursuant to an Agreement and Plan of Merger dated February 28, 2012, Standard proposes to acquire all the shares of Central from affiliates of Kohlberg & Co. LLC, Lubert-Adler Partners LP and Versa Capital Management LLC, who will in turn acquire minority interests in Standard with board representation. The transaction is valued at approximately $345–348 million in total, including cash, about 6.1 million shares of Standard's common stock, and assumption of Central's debt.

2. The merger will combine the two largest nationwide operators of off-street parking facilities in the United States, in terms of parking facilities, spaces, and parking revenues, effectively doubling the size of Standard. Together, Standard and Central will operate about 4,400 parking facilities, with over 2.2 million parking spaces, and more than $1.5 billion in combined total revenues. In many of the markets where Standard and Central now compete, market concentration would increase substantially, and the merged entity would have a dominant share.

3. Standard and Central are direct and substantial head-to-head competitors in providing off-street parking services to motorists, the consumers of such parking services, visiting the central business districts (''CBDs'') of various cities in the United States. In many of the cities where both Standard and Central operate, one of the two firms is the largest or among the largest operators of off-street parking services, and the other firm operates nearby parking facilities that constitute attractive competitive alternatives for consumers.

4. Head-to-head competition between Standard and Central has benefitted consumers through lower prices and better services. The proposed merger threatens to end the substantial competition between Standard and Central in those areas where they operate competing parking facilities that are attractive alternatives for consumers, in violation of Section 7 of the Clayton Act.

II. THE DEFENDANTS

5. Standard Parking Corporation, which is publicly held, is incorporated in Delaware and headquartered in Chicago, Illinois. It is one of the two largest operators of off-street parking facilities in the United States, with parking operations in 41 states and the District of Columbia. Standard operates approximately 2,200 parking facilities containing over 1.2 million parking spaces in hundreds of cities. More than 90% of its facilities and spaces are located in the United States, with some in Canada. Its portfolio includes leased and managed parking facilities, with about 90% of its facilities under management contracts. Standard's total reported revenues for 2011 were over $729 million, including more than $321 million from leases and management contracts, and more than $408 million from reimbursement of management contract expenses. Standard has grown in large part through several earlier mergers with other parking management companies, though none were as large as Central.

6. Central Parking Corporation, which is privately held, is incorporated in Tennessee and headquartered in Nashville, Tennessee. Central Parking Corporation is a wholly owned subsidiary of KCPC Holdings, Inc., which is incorporated in Delaware and located at the address of its largest owner, Kohlberg & Company, in Mt. Kisco, New York. Central is the other of the two largest operators of off-street parking facilities in the United States, with parking operations in 38 states and the District of Columbia and Puerto Rico. Central operates more than 2,200 parking facilities and approximately 1 million parking spaces. Its portfolio includes owned, leased and managed parking facilities, with most of its facilities under management contracts though many facilities are also leased. Central's total revenues for 2011 were in excess of $800 million.

III. JURISDICTION AND VENUE

7. The United States brings this action under Section 15 of the Clayton Act, as amended, 15 U.S.C. § 25, to prevent and restrain Defendants from violating Section 7 of the Clayton Act, 15 U.S.C. § 18.

8. In states where Defendants operate parking facilities, they serve motorists that cross state lines; provide centralized management services across state lines from their respective headquarters; and purchase substantial quantities of equipment, services and supplies in the flow of interstate commerce. The operation of off-street parking services by Standard and Central is thus an activity that substantially affects and is in the flow of interstate trade and commerce. Accordingly, this Court has jurisdiction over the subject matter of this action pursuant to Section 15 of the Clayton Act, 15 U.S.C. § 25, and 28 U.S.C. §§ 1331, 1337(a) and 1345.

9. Defendants have consented to venue and personal jurisdiction in this judicial district.

Venue is therefore proper in this District under Section 12 of the Clayton Act, 15 U.S.C. § 22, and 28 U.S.C. § 1391(c).

IV. RELEVANT PRODUCT AND GEOGRAPHIC MARKETS

10. The relevant product market in which to assess the likely competitive effects of the proposed merger is the provision of off-street parking services.

11. Consumers drive their vehicles to the CBDs of cities for work, business, shopping or entertainment. Off-street parking facilities are usually where they park their vehicles while they are in the city. These parking facilities include open lots, free-standing garages, or parking garages located within commercial or residential buildings.

12. Standard and Central, as operators of parking facilities, each offer consumers off-street parking services at facilities that the operator owns, leases, or manages. When an operator owns a parking facility, it is the proprietor of the business and sets the conditions of operation, including prices. When an operator leases a parking facility from the property owner, it pays the owner a set lease amount or sharing revenues with the owner, has substantial or complete control over pricing and other conditions of operation, and keeps all or a substantial share of the revenues. When an operator manages a parking facility for the owner of that facility, the operator commonly conducts competitive rate analyses of the parking prices in the area near the facility and recommends prices and other operating practices to the owner. In addition, the operator of a managed parking facility is not only compensated with a set management fee and reimbursement of a large part of its expenses in operating the facility, but also often receives a share of revenues or profits, giving the manager an incentive to operate the facility so as to maximize revenues and profits. Often, in such managed parking facilities, the incentives of the operator are the same or similar to those of the owner to maximize profits, especially as to non-tenant monthly customers, or transient (daily, hourly and event parking) customers.

13. Off-street parking services are commonly offered to consumers on the basis of monthly, daily, hourly, and less-than-hourly prices. In addition, such services are frequently offered to consumers at special prices for certain events in the area, or for lower demand times, including ''early-bird,'' evening, and overnight prices.

14. On-street parking is generally not a practical substitute for off-street parking services. Off-street parking services provide many advantages over on-street parking. Off-street parking services can allow consumers to select a level of service (such as using a valet parking service instead of just self-parking), a feature not available with on-street parking. Off-street parking facilities often provide consumers with relative certainty about availability of suitable parking and the location and time that it will be available, especially for consumers who purchase monthly contracts. Off-street parking also offers consumers greater security for their vehicles, and in the case of a garage, the vehicles are sheltered from the elements, a feature not available with on-street parking. In addition, consumers usually can leave vehicles in an off-street parking facility as long as desired without the need to move them or ''feed the meter,'' thereby eliminating the risk that the vehicles will receive parking tickets. On-street parking in CBDs is frequently only short-term parking, limited to a few hours and unavailable in certain locations at particular times of day, such as ''rush hour,'' when more traffic lanes in CBDs need to be open. Finally, in most CBDs on-street parking is available only in small quantities compared with off-street parking.

15. For all these reasons, the prospect that motorists would switch to on-street parking is unlikely to affect significantly pricing decisions of managers of off-street parking facilities.

16. Consumers who decide to drive to the CBD rather than take public transportation do so for a variety of reasons, and public transportation is not a practical substitute for off-street parking. Thus, the possibility of traveling to a CBD by public transportation is not likely to be a significant constraint on pricing decisions of managers of off-street parking facilities, even where adequate public transportation is available in a city.

17. Competition among off-street parking facilities occurs in CBDs and smaller areas within the CBDs of cities across the United States. Defendants' managers make pricing decisions and recommendations to owners for each facility based on market conditions within a few blocks of that facility.

18. For convenience, motorists park near their destination, typically within a few blocks, since they need to walk the remainder of the way to their destination.

19. Consumers faced with a small but significant and nontransitory increase in off-street parking prices near their destinations would not turn to more distant parking facilities, on-street parking, or public transportation in sufficient numbers to render the price increase unprofitable. Therefore, the provision of off-street parking services is a relevant product market, and a line of commerce within the meaning of Section 7 of the Clayton Act. In addition, the relevant geographic markets within which to assess the likely anticompetitive effects of the proposed merger are no larger than CBDs of cities, and commonly consist of considerably smaller areas of CBDs that encompass those off-street parking facilities within a few blocks of a destination for consumers. These areas are ''sections of the country'' within the meaning of Section 7 of the Clayton Act.

20. The relevant geographic markets for off-street parking services, where Standard and Central both operate parking facilities close enough to be attractive competitive alternatives to customers, are contained within areas of the CBDs in the following 29 cities or parts of cities in the United States: (1) Atlanta, GA; (2) Baltimore, MD; (3) Bellevue, WA; (4) Boston, MA; (5) New York City (Bronx), NY; (6) Charlotte, NC; (7) Chicago, IL; (8) Cleveland, OH; (9) Columbus, OH; (10) Dallas, TX; (11) Denver, CO; (12) Fort Myers, FL; (13) Fort Worth, TX; (14) Hoboken, NJ; (15) Houston, TX; (16) Kansas City, MO; (17) Los Angeles, CA; (18) Miami, FL; (19) Milwaukee, WI; (20) Minneapolis, MN; (21) Nashville, TN; (22) New Orleans, LA; (23) Newark, NJ; (24) Philadelphia, PA; (25) Phoenix, AZ; (26) New York City (Rego Park), NY; (27) Richmond, VA; (28) Sacramento, CA; and (29) Tampa, FL.

V. UNLAWFUL COMPETITIVE EFFECTS

21. Standard and Central are direct and substantial competitors in offering off-street parking services to consumers. Standard and Central compete on the prices charged to consumers and on the terms and conditions and other services offered to consumers, including hours of operation, the mixture of parking options offered (e.g., monthly contracts, ''early-bird'' or evening specials), cleanliness and security of facilities, and the skill, efficiency and courtesy of staff.

22. Standard and Central establish, either unilaterally or in cooperation with the owners of the parking facilities, parking prices and terms and conditions of services in order to attract consumers to the facilities they operate and to maximize the profitability of their various parking facilities. Generally, prices and services are established on a location-by-location basis. In recommending and determining prices and services, Standard and Central take into consideration a variety of factors, including the prices charged by nearby competing firms and other local market conditions, including the demand for off-street parking and the availability of other off-street parking locations.

23. In the relevant geographic markets for off-street parking services, the proposed merger threatens substantial and serious harm to consumers. On its own or in cooperation with the owners of the parking facilities Standard operates, Standard could profitably unilaterally raise prices to consumers, or reduce the quantity or quality of services offered.

24. In some of the relevant geographic markets, there are no other competing parking facilities that would be attractive competitive alternatives to consumers using the facilities operated by either Central or Standard, so that the merger would give rise to a monopoly. In other relevant geographic markets, there are other competitors present, but the number of the other facilities and their capacities are insufficient to preclude the exercise of market power by a merged Standard and Central. In all of the geographic markets identified, the merger of Standard and Central would result in at least a moderately concentrated market and in the great majority of cases a highly concentrated market, as measured by the Herfindahl-Hirschman Index (''HHI''), which is defined and explained in Appendix A to this Complaint, leaving one firm operating at least 35%, and often much more than that, of the total parking capacity. In all of the relevant geographic markets, the merger of Standard and Central would also result in a significant increase in concentration in the market following the merger, reflected by an increase in the HHI of at least 200 points, and, in the great majority of cases, by several hundred or even more than 1000 points.

VI. DIFFICULTY OF ENTRY

25. Creation of new parking facilities and spaces in CBDs is largely a by-product of other decisions, such as whether to build or tear down a building, which are not directly related to the demand for, or changes in the price of, parking services. The creation of a significant number of new parking spaces in a CBD would not be timely, likely, or sufficient to prevent anticompetitive effects from the merger of Standard and Central in each of the affected markets. Other operators of parking facilities can enter only to the extent that capacity is available, and in the parking industry leases and management contracts typically run for periods of several years and are usually awarded to the incumbent operator by the owners when they come up for renewal. There can be no expectation that existing leases or management contracts currently held by Standard and Central would be transferred to new operators in a manner that would be timely, likely or sufficient to prevent anticompetitive effects from the merger in the affected markets.

VII. VIOLATIONS ALLEGED

26. The proposed merger between Standard and Central is likely substantially to lessen competition in interstate trade and commerce, in violation of Section 7 of the Clayton Act, 15 U.S.C. § 18.

27. The effect of the proposed merger, if consummated, may be the substantial lessening of competition in the relevant product and geographic markets by, among other things:

a. eliminating Central as an effective independent competitor of Standard in the sale of off-street parking services;

b. eliminating or reducing substantial competition between Standard and Central for the sale of off-street parking services; and

c. providing Standard with the ability to exercise market power by raising prices or reducing the quality of services offered for off-street parking services.

VIII. REQUESTED RELIEF

28. The United States respectfully requests that this Court: (a) adjudge and decree that the merger of Standard and Central would be unlawful and violate Section 7 of the Clayton Act; (b) preliminarily and permanently enjoin and restrain Defendants and all other persons acting on their behalf from consummating the proposed merger of Standard and Central as expressed in their merger agreement dated on or about February 28, 2012, or from entering into or carrying out any other contract, agreement, understanding or plan, the effect of which would be to combine the businesses or assets of Standard and Central; (c) award the United States its costs for this action; and (d) award the United States such other and further relief as the Court deems just and proper.

Respectfully submitted,

FOR PLAINTIFF UNITED STATES OF AMERICA:

/s/
Joseph F. Wayland
Acting Assistant Attorney General

/s/
Renata B. Hesse (D.C. Bar No. 466107)
Deputy Assistant Attorney General

/s/
Carl Willner (D.C. Bar No. 412841)*
Michael J. Hirrel (D.C. Bar No. 940353)
Alvin H. Chu
Trial Attorneys
United States Department of Justice
Antitrust Division
Telecommunications and Media Enforcement Section
450 Fifth Street NW., Suite 7000
Washington, DC 20530
Phone: (202) 514–5813
Facsimile: (202) 514–6381
Email: *carl.willner@usdoj.gov*
*Attorney of Record

/s/
Patricia A. Brink
Director of Civil Enforcement

/s/
Scott A. Scheele (D.C. Bar No. 429061)
Chief, Telecommunications and Media Enforcement Section

/s/
Lawrence M. Frankel (D.C. Bar No. 441532)
Assistant Chief, Telecommunications and Media
Enforcement Section
Dated: September 26, 2012

APPENDIX A

Herfindahl-Hirschman Index

The term ''HHI'' means the Herfindahl-Hirschman Index, a commonly accepted measure of market concentration. The HHI is calculated by squaring the market share of each firm competing in the market and then summing the resulting numbers. For example, for a market consisting of four firms with shares of 30, 30, 20, and 20 percent, the HHI is 2,600 (302 + 302 + 202 + 202 = 2,600). The HHI takes into account the relative size distribution of the firms in a market. It approaches zero when a market is occupied by a large number of firms of relatively equal size and reaches its maximum of 10,000 points when a market is controlled by a single firm. The HHI increases both as the number of firms in the market decreases and as the disparity in size between those firms increases.

Markets in which the HHI is between 1,500 and 2,500 points are considered to be moderately concentrated, and markets in which the HHI is in excess of 2,500 points are considered to be highly concentrated. *See Horizontal Merger Guidelines* § 5.3 (issued by the U.S. Department of Justice and the Federal Trade Commission on Aug. 19, 2010). Transactions that increase the HHI by more than 200 points in highly concentrated markets will be presumed to be likely to enhance market power. *Id.* Mergers resulting in highly concentrated markets that involve an increase in the HHI of between 100 points and 200 points potentially raise significant competitive concerns and often warrant scrutiny. *Id.*

UNITED STATES DISTRICT COURT FOR THE DISTRICT OF COLUMBIA

UNITED STATES OF AMERICA, Plaintiff, v. STANDARD PARKING CORPORATION, KCPC HOLDINGS, INC., and CENTRAL PARKING CORPORATION, Defendants.	))))))))))))))	Case no. 1:12–cv–01598

COMPETITIVE IMPACT STATEMENT

Plaintiff United States of America (''United States''), pursuant to Section 2(b) of the Antitrust Procedures and Penalties Act (''APPA'' or ''Tunney Act''), 15 U.S.C. § 16(b)–(h), files this Competitive Impact Statement relating to the proposed Final Judgment submitted for entry in this civil antitrust proceeding.

I. NATURE AND PURPOSE OF THE PROCEEDING

Defendants Standard Parking Corporation (''Standard'') and KCPC Holdings, Inc. entered into an agreement on February 28,

2012, by which Standard will acquire KCPC Holdings, Inc. and its wholly owned subsidiary, Defendant Central Parking Corporation (together ''Central''), for approximately $345 million. This transaction will combine the two largest nationwide operators of off-street parking facilities, who compete in providing parking services in numerous cities throughout the United States. The United States filed a civil antitrust Complaint on September 26, 2012, seeking to enjoin the proposed acquisition. The Complaint alleges that the likely effect of this acquisition would be to lessen competition substantially for off-street parking services in various local geographic markets in 29 specified cities, or parts of cities, throughout the United States, in violation of Section 7 of the Clayton Act, 15 U.S.C. § 18. This loss of competition likely would result in higher prices and lower quality of services for off-street parking in the affected local geographic markets.

At the same time the Complaint was filed, the United States also filed an Asset Preservation Stipulation and Order (''Stipulation'') and proposed Final Judgment, which are designed to eliminate the anticompetitive effects of the acquisition. Under the proposed Final Judgment, which is explained more fully below, Defendants will be required within a specified time to divest their interests in at least 107 identified parking facilities in the affected local geographic markets, including the parking facility leases or management contracts (''parking facility agreements'') under which they operate those parking facilities on behalf of the owners. Under the terms of the Stipulation, Standard and Central will ensure that each of the parking facilities to be divested continues to be operated as a competitively and economically viable ongoing business concern during the pendency of the ordered divestiture.

The United States and Defendants have stipulated that the proposed Final Judgment may be entered after compliance with the APPA. Entry of the proposed Final Judgment would terminate this action, except that the Court would retain jurisdiction to construe, modify, or enforce the provisions of the proposed Final Judgment and to punish violations thereof.

II. DESCRIPTION OF THE EVENTS GIVING RISE TO THE ALLEGED VIOLATION

A. The Defendants and the Proposed Transaction

Standard and Central are the two largest nationwide operators of off-street parking facilities in the United States. Together, Standard and Central will operate about 4,400 parking facilities with over 2.2 million parking spaces and more than $1.5 billion in combined total revenues.

Standard, a publicly held Delaware corporation with its headquarters in Chicago, Illinois, has parking operations in 41 states and the District of Columbia. Standard operates approximately 2,200 parking facilities containing over 1.2 million parking spaces in hundreds of cities. Standard's portfolio includes both leased and managed parking facilities, with about 90% of its facilities under management contracts. Standard's total reported revenues for 2011 were more than $729 million.

Central Parking Corporation, a privately held Tennessee corporation with its headquarters in Nashville, Tennessee, is a wholly owned subsidiary of KCPC Holdings, Inc., a Delaware corporation with its principal place of business in Mt. Kisco, New York. Central has parking operations in 38 states along with the District of Columbia and Puerto Rico, and operates more than 2,200 parking facilities and approximately 1 million parking spaces. Central's portfolio includes owned, leased and managed parking facilities, with most of its facilities under management contracts though many facilities are also leased. Central's total revenues for 2011 were in excess of $800 million.

Pursuant to an Agreement and Plan of Merger dated February 28, 2012, Standard will acquire KCPC Holdings, Inc. and its wholly owned subsidiary, Central Parking Corporation, from the owners of Central. The transaction is valued at approximately $345–348 million in total, including cash compensation, about 6.1 million shares of common stock amounting to a 28% interest in Standard, and assumption by Standard of Central's debt.

The proposed transaction, as initially agreed to by Defendants, would substantially lessen competition in local geographic markets in 29 cities, or parts of cities, throughout the United States where Standard and Central are close competitors, as stated in the Complaint.

B. The Competitive Effects of the Transaction on Off-Street Parking Services

Standard and Central are both in the business of providing off-street parking services to consumers in hundreds of cities throughout the United States. Defendants act principally as operators of parking facilities owned by others, entering into leases or management contracts with the owners or agents of the owners to operate the facilities (though Central still has a few owned facilities). Standard and Central supply employees and equipment, as well as back-office support from their regional and headquarters management.

Standard and Central, as operators of parking facilities, are direct and substantial head-to-head competitors in providing off-street parking services. The consumers of off-street parking services are motorists visiting the central business districts (CBDs) of numerous cities, or parts of cities, throughout the United States. In many of the geographic markets where Standard and Central now compete, one of the two firms is the largest or among the largest operators of off-street parking services, and the other firm operates nearby parking facilities that constitute attractive competitive alternatives for consumers. Therefore, as a result of the merger of Standard and Central, in many of the markets where these firms now compete, market concentration would increase substantially, and the merged entity would have a dominant share. Head-to-head competition between Standard and Central has benefitted consumers through lower prices and better services, and the proposed merger threatens to end this substantial competition in areas where both firms operate competing parking facilities that are attractive alternatives for consumers.

As alleged in the Complaint, the relevant product market is the provision of off-street parking services. When consumers drive their vehicles to CBDs of cities, or parts of cities, whether for work, business, shopping or entertainment, they primarily park their vehicles in off-street parking facilities. These parking facilities can be open lots, free-standing garages, or parking garages located within commercial or residential buildings. Off-street parking services are commonly offered to consumers with varying price structures, for monthly, daily, hourly, or less-than-hourly parking. In addition, special prices can be offered for certain events in the area, such as sports games, concerts or theatre productions, or for lower demand times, such as ''early- bird,'' evening and overnight prices.

On-street parking is generally not a practical substitute for off-street parking services. Off-street and on-street parking are distinct services, with off-street parking services providing many advantages over on-street parking. Off-street parking services can allow customers to select a level of service (e.g., using a valet parking service instead of just self-parking), a feature not available with on-street parking. In addition, off-street parking services provide consumers with relative certainty about availability of suitable parking, particularly for customers who purchase monthly off-street parking contracts. Off-street parking offers greater security, and, with garages, shelter from the elements. On-street parking is limited and is also frequently only short-term parking, which may be unavailable in certain locations or at particular times of day. With off-street parking, customers usually do not need to ''feed the meter,'' nor do they need to move their vehicles periodically to comply with traffic restrictions and avoid parking tickets. For all these reasons, as alleged in the Complaint, the prospect that motorists would switch to on-street parking is unlikely to affect significantly the pricing decisions of managers of off-street parking facilities.

Likewise, the possibility of consumers traveling to a CBD by public transportation, even where adequate public transportation is available, is not an alternative that is likely to be a significant constraint on pricing decisions at off-street parking facilities. Consumers decide to drive to a CBD rather than take public transportation for a variety of reasons, including the need to have a car available, and the inconvenience of using public transportation to reach their homes, workplaces or other destinations.

There are a variety of arrangements by which Central and Standard, as well as other operators of parking facilities, obtain the rights to offer parking services in those facilities, including direct ownership, leases, and management contracts with the owners of the facilities. An operator that owns a parking facility is the proprietor of the business and sets the conditions of operation, including prices. Direct ownership by these operators is now rare, though still used occasionally by Central.

Leasing is used by both Central and Standard, with Central using it more

frequently. An operator that leases a parking facility from the property owner pays the owner a set lease amount or shares some of the parking revenues with the owner, and retains substantial or complete control over pricing and other conditions of operation. The lessee operating the facility generally assumes the risk that the facility will be unprofitable and is responsible for the costs of operation.

Management contracts are now the most common form under which parking facilities are operated by both Standard and Central, and especially so for Standard. When an operator manages a parking facility for the owner, the operator is commonly compensated with a set management fee and reimbursement of a large part of its expenses in operating the facility, avoiding the risk of loss that a lessee faces. In addition, the operator often receives a share of revenues or profits as specified in the management contract, providing a financial incentive to the manager to operate the facility so as to maximize revenues and profits.

In managed parking facilities, the incentives of the operator are often the same as or similar to those of the owner: to maximize profits, especially as to non-tenant monthly customers or transient (daily, hourly and event parking) customers, who do not have a special relationship with the owner of the building in which the facility is located. An operator such as Standard or Central managing a parking facility for an owner commonly conducts competitive rate analyses of the parking market in the area near the facility and recommends conditions of business operation, including prices, to the owner. Even if owners are not obliged to accept such recommendations, they often do, relying on the expertise of the operator to help them maximize their revenues and profits from the facility. For all these reasons, parking facilities managed by either Standard or Central, as well as ones leased or owned by Standard or Central, have been considered as part of the competitive analysis in evaluating the impact of this merger.

Though the process of identifying relevant geographic markets for parking services and the competitors in those markets can be complex, the underlying principle guiding this process is well understood in the parking industry. As reflected in the competitive rate analyses conducted by the parking operators, motorists park near their destinations, typically within a few blocks of where they are going. Consumers faced with a small but significant and nontransitory increase in parking prices for the parking facilities near their destinations would not turn to more distant parking facilities in sufficient numbers to render the price increase unprofitable. Parking managers for Central, Standard, and other competitors in the industry make their pricing decisions or recommendations separately for each facility, based on market conditions within a few blocks of that facility. Therefore, the relevant geographic markets within which the likely competitive effects of this merger have been assessed are no larger than the CBDs of individual cities, or parts of cities, where Standard and Central both have parking facilities, and commonly consist of considerably smaller areas of the CBDs that encompass those off-street parking facilities within a few blocks of a destination for consumers.

Two methods have been used to identify relevant geographic markets. In most cases, the geographic market is based on overlapping pairs of parking facilities, one operated by Central and one by Standard, that are within close enough walking distance typically to be considered by customers as alternatives for parking. The extent of the overlap between the Standard and Central facilities is the area containing consumer destinations for which the Standard and Central facilities compete to provide parking. This analysis then determines which facilities of other competitors would be considered within close enough walking distance to that overlap area to be alternatives to the customers for which Standard or Central compete. In some cases, where there is a single attraction likely to draw a large part of the parking business in an area, such as a sports stadium, or where one of the overlapping facilities of the parties is not open to the general public but the other is and could serve as a competitive alternative to parkers in the first, the geographic market includes all other parking facilities within close enough walking distance of the attraction or restricted facility that consumers would be likely to consider them as alternatives.

This process has led to the identification of numerous relevant geographic markets for off-street parking services within the CBDs of cities, or parts of cities, where Standard and Central both operate, each consisting of areas containing several city blocks around the parking facilities at issue. Within one or multiple such areas in 29 cities, or parts of cities, and 21 states of the United States, as listed below, Standard and Central both operate parking facilities close enough to be attractive competitive alternatives to customers, and a likelihood of competitive harm arises as a result of this merger in view of the extent of competition in those markets:

Atlanta, GA
Baltimore, MD
Bellevue, WA
Boston, MA
New York City (Bronx), NY
Charlotte, NC
Chicago, IL
Cleveland, OH
Columbus, OH
Dallas, TX
Denver, CO
Fort Myers, FL
Fort Worth, TX
Hoboken, NJ
Houston, TX
Kansas City, MO
Los Angeles, CA
Miami, FL (including Coral Gables, FL)
Milwaukee, WI
Minneapolis, MN
Nashville, TN
New Orleans, LA
Newark, NJ
Philadelphia, PA
Phoenix, AZ
New York City (Rego Park), NY
Richmond, VA
Sacramento, CA
Tampa, FL

In the relevant geographic markets, substantial competitive harm to consumers is likely to result from this merger in off-street parking services, as alleged in the Complaint. The proposed merger would substantially increase Standard's market shares in the relevant geographic markets, and it would place in Standard's hands substantial control over prices and services available to consumers. On its own or in cooperation with the owners of parking facilities, who often have the same or similar incentives to Standard to maximize profits, Standard could profitably unilaterally raise prices to consumers, or reduce the quantity or quality of services offered.

Standard and Central now compete in these relevant geographic markets in several respects, including the prices charged; hours of operation; the mixture of parking operations offered, such as monthly contracts, ''early-bird,'' and evening specials; cleanliness and security of facilities; and the skill, efficiency and courtesy of staff. When Standard and Central determine, or recommend to owners, prices and terms of service, they take into consideration a variety of factors relevant to competition in the local geographic market in which a specific facility operates, including local market conditions such as the demand for off-street parking and the availability of other off-street parking locations, and the prices charged by available competing firms in the local geographic market.

Following the merger, in some of the relevant geographic markets, there would be no other parking facilities that would be competitive alternatives to Central or Standard facilities, so that the merger would create a monopoly. More often, in the relevant geographic markets, some other competitors are present, but the number of their facilities and the capacities of those facilities are insufficient to preclude the exercise of market power by a merged Standard and Central. Control over a large share of available parking capacity in a local geographic market is likely to give rise to the ability to exert market power unilaterally over prices and terms of service for off-street parking in that area.

Market shares in the relevant geographic markets have generally been assessed based on total capacity of parking facilities in terms of parking spaces, for both Standard and Central, and for competing facilities that would be attractive alternatives to their customers. In all of the local geographic markets identified for off-street parking services, the merger of Standard and Central would result in the merged firm having at least 35%, and often much more than that, of the total parking capacity. In all of these markets, the merger would result in at least a moderately concentrated market and in the great majority of cases a highly concentrated market, as measured by the Herfindahl-Hirschman Index (''HHI'').[1] In addition, in all

[1] The term ''HHI'' means the Herfindahl-Hirschman Index, a commonly accepted measure of market concentration. The HHI is calculated by squaring the market share of each firm

of the geographic markets identified, the merger of Standard and Central would also result in a significant increase in concentration in the market following the merger, reflected by an increase in the HHI of at least 200 points. Under the *Horizontal Merger Guidelines*, the combination of a highly concentrated market and an increase in concentration of at least 200 points gives rise to a presumption of competitive harm. Indeed, in the great majority of the relevant geographic markets, the merger would result in an increase in concentration of several hundred points, or of even more than 1000 points, as measured by the HHI.

Entry of new off-street parking capacity would not be likely, timely, or sufficient to remedy the competitive harm otherwise likely to result from this merger, in any of the affected relevant geographic markets. That is because creation of new parking facilities and spaces in CBDs is largely a by-product of other decisions, such as whether to build or tear down a building, that are not directly related to the demand for, or changes in the price of, parking services in that area. Given the local character of competition, the cost of land, the limited availability of substitutable parking facilities, and the alternative options for the use of convenient land in the market, new entry of parking capacity cannot be viewed as a response likely to make a small but significant and nontransitory price increase unprofitable.

Other operators of parking facilities can enter only to the extent that capacity is available. Assuming that new capacity has not been built, new operators could only enter in a way that might alter Standard's and Central's dominant position in a relevant market by taking capacity from them. But in the parking industry, leases and management contracts typically run for periods of several years, and are usually awarded to the incumbent operators by the owners when they come up for renewal. Given these practices, it cannot be expected that existing leases or management contracts currently held by Standard and Central would be transferred to new operators in a manner that would be timely, likely or sufficient to prevent anticompetitive effects from the merger in the affected markets.

III. EXPLANATION OF THE PROPOSED FINAL JUDGMENT

The divestiture in the proposed Final Judgment will eliminate the anticompetitive effects of the acquisition in off-street parking services in the relevant geographic markets in 29 cities, or parts of cities, by providing for the divestiture of the parking businesses of Central or Standard in those markets involving 107 or 108 named parking facilities.[2] Such a divestiture most commonly will involve the sale of Standard's or Central's interests in the parking facilities in those markets, including its parking facility lease or management agreements, to a different operator or operators, thereby establishing the divested facility as an economically viable competitor independent of Standard. In some cases, as provided by Paragraph IV.K of the proposed Final Judgment, the Defendants may elect to accomplish a divestiture by terminating Standard's or Central's parking facility agreement for the specified facility—or letting the agreement expire without renewal at the end of its natural term—after notice to the affected facilities owners. This alternative may be particularly relevant in the case of agreements with a very short remaining term that could be difficult to sell. In these cases, the owner of the parking facility would select a new operator for the facility following the divestiture.

The proposed Final Judgment requires Defendants, within 90 days after the filing of the Complaint, or 5 days after notice of the entry of the Final Judgment by the Court, whichever is later, to divest, as a viable ongoing parking service business, all of their interests in each of the Parking Facilities listed in Schedule A to the proposed Final Judgment. Defendants are required to use their best efforts to accomplish the divestitures ordered as expeditiously as possible, and the United States has the sole discretion, under Paragraph IV.D of the proposed Final Judgment, to extend the time period for any divestiture, but not for more than 90 additional days. Such extensions can be granted by the United States on an individual basis for any facility, but the United States expects it will take into account both the extent of the efforts Defendants have made to divest the facility within the original time provided, and the prospects that they will succeed in doing so within the additional time that the extension would permit.

''Parking Facilities'' are defined in the proposed Final Judgment, Paragraph II.E, to mean all of Defendant's interests in the properties listed in Schedule A, including but not limited to Parking Facility Agreements (whether leases, management agreements or otherwise). In turn, ''Parking Facility Agreements'' are defined in Paragraph II.D of the proposed Final Judgment as all agreements that are related to the management of off-street parking facilities as listed in Schedule A, and are between or among the Defendants and the owners or their agents of the properties listed in Schedule A. Defendants must also divest all other tangible and intangible assets used by them primarily in connection with those properties, such as: the other contracts (whether with employees, customers or otherwise); equipment and other property; customer lists, business accounts and records, and market research data for the individual Parking Facilities; manuals and instructions provided to employees; and other physical assets they may have associated with their operation of the specific properties. This would not include, however, assets such as centralized systems software, that are located outside the Parking Facilities and that do not relate primarily to the properties listed on Schedule A. Thus, Defendants will be able to retain back-office systems or other assets and contracts used at the corporate level to support multiple parking facilities, which they would need to conduct their remaining operations, and which other purchasers experienced in the operation of parking facilities could supply for themselves.

The Parking Facility assets must be divested in such a way as to satisfy the United States in its sole discretion that the operations can and will be operated by the purchaser as a viable, ongoing business that can compete effectively in the relevant market. This means, for example, that the United States retains the right to preclude Defendants from divesting their interests in a Parking Facility to a purchaser that in its view would not have the support systems or other needed centralized capabilities to continue the effective competitive operation of the facility. Defendants must take all reasonable steps necessary to accomplish the divestiture quickly and shall cooperate with prospective purchasers.

Defendants are also obliged, under Paragraph IV.E of the proposed Final Judgment, to provide information to acquirers concerning the personnel involved in the operation of any Parking Facility, so as to make offers of employment, and not to interfere with negotiations by any acquirer to employ a person currently employed by a Defendant whose primary responsibility concerns the parking service business of that Parking Facility. This includes, for example, removing impediments to the employees accepting such employment, such as non-compete agreements, which also may not be enforced with respect to any employee whose responsibilities at a local or regional level include a Parking Facility and whose employment terminates within six months of the date after this merger is completed.

Defendants are required, under Paragraphs IV.B and C of the proposed Final Judgment, to cooperate with prospective acquirers of the Parking Facilities, by furnishing them information and documents about the Parking Facilities as customarily provided in a due diligence process, and giving them reasonable access to personnel and other documents and information, and the ability to make inspection of the Parking Facilities. They are also required not to take any action that would impede the operation of any parking business connected with the Parking Facilities, or take any action that would impede divestiture, under Paragraph IV.G.

In the event that Defendants do not accomplish the divestiture within the periods prescribed in the proposed Final Judgment, the Final Judgment provides in Section VI that upon application of the United States the

competing in the market and then summing the resulting numbers. The agencies generally consider markets in which the HHI is in excess of 2,500 points to be highly concentrated. See *U.S. Department of Justice & FTC, Horizontal Merger Guidelines § 5.3* (2010). Transactions that increase the HHI by more than 200 points in highly concentrated markets are presumed likely to enhance market power under the Horizontal Merger Guidelines issued by the Department of Justice and the Federal Trade Commission. *See id.*

[2] The reason why there is not a single number for the total parking facilities to be divested is that Defendants have the option in one city, Milwaukee, WI, to accomplish the required divestiture in the relevant geographic markets through either three parking facilities currently operated by Standard, or four parking facilities currently operated by Central. In either form, the divestiture would be sufficient to remedy competitive harm in those markets.

Court will appoint a trustee selected by the United States to effect the divestiture. The appointment of a trustee can be made individually for any Parking Facility, so that some facilities, for example, might be assigned to the trustee even as extensions of time are granted by the United States for the Defendants to complete the divestitures of others, and those Parking Facilities might also be assigned to the trustee later if the Defendants fail to complete the divestiture within the extended time.

If a trustee is appointed, the proposed Final Judgment provides that Defendants will pay all costs and expenses of the trustee. The trustee's commission will be structured so as to provide an incentive for the trustee based on the price obtained and the speed with which the divestiture is accomplished. The Defendants will have no right to object to a divestiture by the trustee on any ground other than malfeasance.

After his or her appointment becomes effective, the trustee will file monthly reports with the Court and the United States setting forth his or her efforts to accomplish the divestiture. At the end of six months from the time that the trustee has assumed responsibility for divestiture of any individual Parking Facility, if the divestiture has not been accomplished, the trustee and the United States will make recommendations to the Court, which shall enter such orders as appropriate, in order to carry out the purpose of the trust, including extending the trust or the term of the trustee's appointment.

The proposed Final Judgment also provides a mechanism for protecting competition in the event that an individual divestiture cannot be made. The Defendants are required to report to the United States at 30-day intervals on compliance with the proposed Final Judgment, including submission of affidavits. Beginning with the second of these periodic reports, Defendants are required to identify any instances in which they anticipate that divestitures of any Parking Facilities cannot be practically accomplished within 30 additional days. This might occur, for example, because the owner of the facility refuses to grant consent to the transfer to an acquirer under the terms of the lease or management contract, or because no prospective purchaser may appear in time. Thus, whenever a Parking Facility is not divested within 60 days of the filing of the Complaint, and no definitive agreement for divestiture exists, the United States has the right under the proposed Final Judgment, Paragraph IV.N, to require Defendants to propose alternative divestitures of Parking Facilities sufficient to preserve competition. The United States has sole discretion whether to accept a proposed alternative divestiture, and if it refuses to accept the alternative, the Defendants must continue to propose alternative divestitures in the relevant market until an acceptable one is found. If the alternative is accepted, it becomes for all purposes a Parking Facility in place of the other Parking Facility listed in Schedule A of the proposed Final Judgment that could not be divested. This process of identifying alternatives in the absence of a divestiture agreement does not apply where Defendants will be divesting a property under Paragraph IV.K by letting the lease or management contract terminate before the time allowed for divestiture has elapsed.

Once a Parking Facility is divested, whether this occurs through transfer to an acquirer acceptable to the United States, or by termination or non-renewal of the lease or management contract, Defendants are prohibited by Paragraph IV.I of the proposed Final Judgment from entering into any agreement to acquire, lease or operate, or acquiring in any other manner an interest in ownership or management of, that Parking Facility during the ten-year term of the proposed Final Judgment. A shorter limitation on reacquisition of only three years from the divestiture of a Parking Facility is provided, however, where Defendants reacquire a Parking Facility directly from the owner of the Parking Facility or the owner's agent through a process that does not involve a transaction with the operator of the Parking Facility. This provision serves to ensure that acquisition of the divested Parking Facilities will be attractive to new operators, who will have a reasonable time to establish themselves and demonstrate to owners that they can operate the facilities effectively before having to compete again against the former incumbent for the right to operate the property. At the same time, it gives the Defendants the opportunity within a reasonable period of time to return to competing for the rights to operate the divested Parking Facilities from the facility owners in a normal manner, rather than having to wait for the expiration of the proposed Final Judgment. This may involve either processes initiated by the owners of facilities, such as requests for bids, or requests to compete for the operating rights initiated by Defendants, provided that a transaction between the operator of the facility and Defendants is not involved. The period of time during which reacquisition is prohibited even for direct transactions with the owner takes into account the normal term of many management contracts for parking facilities. The broader prohibition on reacquisition during the term of the decree also safeguards against any ''sweetheart deals'' where an acquirer or a facility owner takes control of operation of a Parking Facility merely to satisfy the divestiture obligation and then returns it to the Defendants, and thereby ensures that the remedy cannot be circumvented.

The divestiture provisions of the proposed Final Judgment will eliminate the anticompetitive effects of the acquisition in the provision of off-street parking services, in the relevant local geographic markets in the 29 cities, or parts of cities, named in the Complaint where Defendants compete closely now. This relief is designed to ensure that the merger does not increase Standard's market share and control of parking capacity in the relevant local geographic markets in these cities, or parts of cities, to a level likely to lead to the exercise of market power. Nothing in the proposed Final Judgment is intended to limit the United States' ability to investigate or bring actions, where appropriate, to challenge other past or future activities of the Defendants.

IV. REMEDIES AVAILABLE TO POTENTIAL PRIVATE LITIGANTS

Section 4 of the Clayton Act, 15 U.S.C. § 15, provides that any person who has been injured as a result of conduct prohibited by the antitrust laws may bring suit in federal court to recover three times the damages the person has suffered, as well as costs and reasonable attorneys' fees. Entry of the proposed Final Judgment will neither impair nor assist the bringing of any private antitrust damage action. Under the provisions of Section 5(a) of the Clayton Act, 15 U.S.C. § 16(a), the proposed Final Judgment has no prima facie effect in any subsequent private lawsuit that may be brought against Defendants.

V. PROCEDURES AVAILABLE FOR MODIFICATION OF THE PROPOSED FINAL JUDGMENT

The United States and Defendants have stipulated that the proposed Final Judgment may be entered by the Court after compliance with the provisions of the APPA, provided that the United States has not withdrawn its consent. The APPA conditions entry upon the Court's determination that the proposed Final Judgment is in the public interest.

The APPA provides a period of at least sixty (60) days preceding the effective date of the proposed Final Judgment within which any person may submit to the United States written comments regarding the proposed Final Judgment. Any person who wishes to comment should do so within sixty (60) days of the date of publication of this Competitive Impact Statement in the **Federal Register**, or the last date of publication in a newspaper of the summary of this Competitive Impact Statement, whichever is later. All comments received during this period will be considered by the United States Department of Justice, which remains free to withdraw its consent to the proposed Final Judgment at any time prior to the Court's entry of judgment. The comments and the response of the United States will be filed with the Court. In addition, comments will be posted on the U.S. Department of Justice, Antitrust Division's internet Web site and, under certain circumstances, published in the **Federal Register**.

Written comments should be submitted to:

Scott A. Scheele
Chief, Telecommunications and Media Enforcement Section
Antitrust Division
United States Department of Justice
450 Fifth Street, NW., Suite 7000
Washington, DC 20530

The proposed Final Judgment provides that the Court retains jurisdiction over this action, and the parties may apply to the Court for any order necessary or appropriate for the modification, interpretation, or enforcement of the Final Judgment.

VI. ALTERNATIVES TO THE PROPOSED FINAL JUDGMENT

The United States considered, as an alternative to the proposed Final Judgment, a full trial on the merits against Defendants. The United States could have continued the

litigation and sought preliminary and permanent injunctions against Standard Parking Corporation's acquisition of KCPC Holdings, Inc. and its wholly owned subsidiary, Central Parking Corporation. The United States is satisfied, however, that the divestiture of assets described in the proposed Final Judgment will preserve competition for the provision of off-street parking services in the relevant markets identified by the United States. Thus, the proposed Final Judgment would achieve all or substantially all of the relief the United States would have obtained through litigation, but avoids the time, expense, and uncertainty of a full trial on the merits of the Complaint.

VII. STANDARD OF REVIEW UNDER THE APPA FOR THE PROPOSED FINAL JUDGMENT

The Clayton Act, as amended by the APPA, requires that proposed consent judgments in antitrust cases brought by the United States be subject to a sixty-day comment period, after which the court shall determine whether entry of the proposed Final Judgment ''is in the public interest.'' 15 U.S.C. § 16(e)(1). In making that determination, the court, in accordance with the statute as amended in 2004, is required to consider:

(A) the competitive impact of such judgment, including termination of alleged violations, provisions for enforcement and modification, duration of relief sought, anticipated effects of alternative remedies actually considered, whether its terms are ambiguous, and any other competitive considerations bearing upon the adequacy of such judgment that the court deems necessary to a determination of whether the consent judgment is in the public interest; and

(B) the impact of entry of such judgment upon competition in the relevant market or markets, upon the public generally and individuals alleging specific injury from the violations set forth in the complaint including consideration of the public benefit, if any, to be derived from a determination of the issues at trial.

15 U.S.C. § 16(e)(1)(A) & (B). In considering these statutory factors, the court's inquiry is necessarily a limited one as the government is entitled to ''broad discretion to settle with the defendant within the reaches of the public interest.'' United States v. Microsoft Corp., 56 F.3d 1448, 1461 (DC Cir. 1995); see generally United States v. SBC Commc'ns, Inc., 489 F. Supp. 2d 1 (D.D.C. 2007) (assessing public interest standard under the Tunney Act); United States v. InBev N.V./S.A., 2009–2 Trade Cas. (CCH) ¶ 76,736, 2009 U.S. Dist. LEXIS 84787, No. 08–1965 (JR), at *3, (D.D.C. Aug. 11, 2009) (noting that the court's review of a consent judgment is limited and only inquires ''into whether the government's determination that the proposed remedies will cure the antitrust violations alleged in the complaint was reasonable, and whether the mechanism to enforce the final judgment are clear and manageable.'').[3]

As the United States Court of Appeals for the District of Columbia Circuit has held, under the APPA a court considers, among other things, the relationship between the remedy secured and the specific allegations set forth in the government's complaint, whether the decree is sufficiently clear, whether enforcement mechanisms are sufficient, and whether the decree may positively harm third parties. See Microsoft, 56 F.3d at 1458–62. With respect to the adequacy of the relief secured by the decree, a court may not ''engage in an unrestricted evaluation of what relief would best serve the public.'' United States v. BNS, Inc., 858 F.2d 456, 462 (9th Cir. 1988) (citing United States v. Bechtel Corp., 648 F.2d 660, 666 (9th Cir. 1981)); see also Microsoft, 56 F.3d at 1460–62; United States v. Alcoa, Inc., 152 F. Supp. 2d 37, 40 (D.D.C. 2001); InBev, 2009 U.S. Dist. LEXIS 84787, at *3. Courts have held that:

[t]he balancing of competing social and political interests affected by a proposed antitrust consent decree must be left, in the first instance, to the discretion of the Attorney General. The court's role in protecting the public interest is one of insuring that the government has not breached its duty to the public in consenting to the decree. The court is required to determine not whether a particular decree is the one that will best serve society, but whether the settlement is ''within the reaches of the public interest.'' More elaborate requirements might undermine the effectiveness of antitrust enforcement by consent decree.

Bechtel, 648 F.2d at 666 (emphasis added) (citations omitted).[4] In determining whether a proposed settlement is in the public interest, a district court ''must accord deference to the government's predictions about the efficacy of its remedies, and may not require that the remedies perfectly match the alleged violations.'' SBC Commc'ns, 489 F. Supp. 2d at 17; see also Microsoft, 56 F.3d at 1461 (noting the need for courts to be ''deferential to the government's predictions as to the effect of the proposed remedies''); United States v. Archer-Daniels-Midland Co., 272 F. Supp. 2d 1, 6 (D.D.C. 2003) (noting that the court should grant due respect to the United States' prediction as to the effect of proposed remedies, its perception of the market structure, and its views of the nature of the case).

Courts have greater flexibility in approving proposed consent decrees than in crafting their own decrees following a finding of liability in a litigated matter. ''[A] proposed decree must be approved even if it falls short of the remedy the court would impose on its own, as long as it falls within the range of acceptability or is 'within the reaches of public interest.''' United States v. Am. Tel. & Tel. Co., 552 F. Supp. 131, 151 (D.D.C. 1982) (citations omitted) (quoting United States v. Gillette Co., 406 F. Supp. 713, 716 (D. Mass. 1975)), aff'd sub nom. Maryland v. United States, 460 U.S. 1001 (1983); see also United States v. Alcan Aluminum Ltd., 605 F. Supp. 619, 622 (W.D. Ky. 1985) (approving the consent decree even though the court would have imposed a greater remedy). To meet this standard, the United States ''need only provide a factual basis for concluding that the settlements are reasonably adequate remedies for the alleged harms.'' SBC Commc'ns, 489 F. Supp. 2d at 17.

Moreover, the court's role under the APPA is limited to reviewing the remedy in relationship to the violations that the United States has alleged in its Complaint, and does not authorize the court to ''construct [its] own hypothetical case and then evaluate the decree against that case.'' Microsoft, 56 F.3d at 1459; see also InBev, 2009 U.S. Dist. LEXIS 84787, at *20 (''the 'public interest' is not to be measured by comparing the violations alleged in the complaint against those the court believes could have, or even should have, been alleged''). Because the ''court's authority to review the decree depends entirely on the government's exercising its prosecutorial discretion by bringing a case in the first place,'' it follows that ''the court is only authorized to review the decree itself,'' and not to ''effectively redraft the complaint'' to inquire into other matters that the United States did not pursue. Microsoft, 56 F.3d at 1459–60. As this Court recently confirmed in SBC Communications, courts ''cannot look beyond the complaint in making the public interest determination unless the complaint is drafted so narrowly as to make a mockery of judicial power.'' SBC Commc'ns, 489 F. Supp. 2d at 15.

In its 2004 amendments, Congress made clear its intent to preserve the practical benefits of utilizing consent decrees in antitrust enforcement, adding the unambiguous instruction that ''[n]othing in this section shall be construed to require the court to conduct an evidentiary hearing or to require the court to permit anyone to intervene.'' 15 U.S.C. § 16(e)(2). The language wrote into the statute what Congress intended when it enacted the Tunney Act in 1974, as Senator Tunney explained: ''[t]he court is nowhere compelled to go to trial or to engage in extended proceedings which might have the effect of vitiating the benefits of prompt and less costly settlement through the consent decree process.'' 119 Cong. Rec. 24,598 (1973) (statement of Senator Tunney). Rather, the procedure for the public interest determination is left to the discretion of the court, with the recognition that the court's ''scope of review remains sharply proscribed

[3] The 2004 amendments substituted ''shall'' for ''may'' in directing relevant factors for court to consider and amended the list of factors to focus on competitive considerations and to address potentially ambiguous judgment terms. Compare 15 U.S.C. § 16(e) (2004), with 15 U.S.C. § 16(e)(1) (2006); see also SBC Commc'ns, 489 F. Supp. 2d at 11 (concluding that the 2004 amendments ''effected minimal changes'' to Tunney Act review).

[4] Cf. BNS, 858 F.2d at 464 (holding that the court's ''ultimate authority under the [APPA] is limited to approving or disapproving the consent decree''); United States v. Gillette Co., 406 F. Supp. 713, 716 (D. Mass. 1975) (noting that, in this way, the court is constrained to ''look at the overall picture not hypercritically, nor with a microscope, but with an artist's reducing glass''). See generally Microsoft, 56 F.3d at 1461 (discussing whether ''the remedies [obtained in the decree are] so inconsonant with the allegations charged as to fall outside of the 'reaches of the public interest' '').

by precedent and the nature of Tunney Act proceedings.'' SBC Commc'ns, 489 F. Supp. 2d at 11.[5]

VIII. DETERMINATIVE DOCUMENTS

There are no determinative materials or documents within the meaning of the APPA that were considered by the United States in formulating the proposed Final Judgment.

Dated: September 26, 2012.

Respectfully submitted,

/s/ Carl Willner.

Carl Willner (DC Bar No. 412841)
Michael J. Hirrel (DC Bar No. 940353)
U.S. Department of Justice
Antitrust Division
Telecommunications and Media
Enforcement Section
450 Fifth Street, NW., Suite 7000
Washington, DC 20530
(202) 514–5813.
Email: *carl.willner@usdoj.gov*

UNITED STATES DISTRICT COURT
FOR THE DISTRICT OF COLUMBIA

UNITED STATES OF AMERICA, Plaintiff, v. STANDARD PARKING CORPORATION, KCPC HOLDINGS, INC., and CENTRAL PARKING CORPORATION, Defendants.	Case no. 1:12-cv-01598.

PROPOSED FINAL JUDGMENT

WHEREAS, Plaintiff, United States of America, filed its Complaint on September 26, 2012, the United States and Defendants Standard Parking Corporation (''Standard'') and KCPC Holdings, Inc., and Central Parking Corporation, a wholly owned subsidiary of KCPC Holdings, Inc. (both together and separately, ''Central''), by their respective attorneys, having consented to the entry of this Final Judgment without trial or adjudication of any issue of fact or law, and without this Final Judgment constituting any evidence against or an admission by any party regarding any issue of law or fact;

AND WHEREAS, Defendants agree to be bound by the provisions of this Final Judgment pending its approval by the Court;

AND WHEREAS, the essence of this Final Judgment is the prompt and certain divestiture of parking facilities, including agreements concerning the operation of such facilities, by the Defendants to ensure that competition is not substantially lessened;

AND WHEREAS, the United States requires Defendants to make certain divestitures for the purpose of remedying the loss of competition alleged in the Complaint;

AND WHEREAS, Defendants have represented to the United States that the divestitures required below can and will be made and that Defendants will later raise no claims of hardship or difficulty as grounds for asking the Court to modify any of the divestiture provisions contained below;

NOW, THEREFORE, before any testimony is taken, without trial or adjudication of any issue of fact or law, and upon consent of the parties, it is ORDERED, ADJUDGED, AND DECREED:

I. JURISDICTION

This Court has jurisdiction over the subject matter of and each of the parties to this action. The Complaint states a claim upon which relief may be granted against Defendants under Section 7 of the Clayton Act, as amended, 15 U.S.C. § 18.

II. DEFINITIONS

As used in this Final Judgment:

A. ''Acquirer'' or ''Acquirers'' mean the entity or entities to whom the Defendants divest the Parking Facilities, or who succeed to the Defendants' interests in any Parking Facility Agreement that is transferred pursuant to this Final Judgment.

B. ''Standard'' means Defendant Standard Parking Corporation, a Delaware corporation, with its headquarters in Chicago, Illinois, and includes its successors and assigns, and its subsidiaries, divisions, groups, affiliates, partnerships, joint ventures, directors, officers, managers, agents, and employees.

C. ''Central'' means Defendant KCPC Holdings, Inc., a Delaware corporation, with its headquarters in Mt. Kisco, New York, together with its wholly owned subsidiary, Defendant Central Parking Corporation, a Tennessee corporation with its headquarters in Nashville, Tennessee, and includes their successors and assigns, and their subsidiaries, divisions, groups, affiliates, partnerships, joint ventures, directors, officers, managers, agents, and employees.

D. ''Parking Facility Agreements'' means all agreements, whether leases, management agreements or otherwise, related to the operation or management of off-street parking facilities as listed in Schedule A below, between or among the Defendants and the owners or agents of the owners of the properties listed in Schedule A.

E. ''Parking Facilities'' means all Defendants' interests in the properties listed in Schedule A, including the Parking Facility Agreements for those properties, and all tangible and intangible assets used by Defendants primarily in connection with those properties, including, but not limited to: employment, customer or other contracts; equipment and other property; the customer lists, business accounts and records, and market research data for the individual Parking Facilities; manuals and instructions provided to employees; and other physical assets, associated with the properties; but not assets, such as centralized systems software, that are located outside the Parking Facilities and do not relate primarily to the properties listed on Schedule A.

F. ''Divest'' or ''Divestiture'' means the transfer, sale or assignment of Parking Facilities.

III. APPLICABILITY

A. This Final Judgment applies to the Defendants and all other persons in active concert or participation with any of them who receive actual notice of this Final Judgment by personal service or otherwise.

B. If, prior to complying with Section IV, Section V, and Section VI of this Final Judgment, either Defendant sells all or substantially all its assets or lesser business units that include the Parking Facilities, it shall require the purchaser or purchasers, as a condition of the sale, to be bound by the provisions of this Final Judgment; however, Defendants need not obtain such an agreement from an Acquirer of the assets divested pursuant to this Final Judgment.

[5] See United States v. Enova Corp., 107 F. Supp. 2d 10, 17 (D.D.C. 2000) (noting that the ''Tunney Act expressly allows the court to make its public interest determination on the basis of the competitive impact statement and response to comments alone''); United States v. Mid-Am. Dairymen, Inc., 1977–1 Trade Cas. (CCH) ¶ 61,508, at 71,980 (W.D. Mo. 1977) (''Absent a showing of corrupt failure of the government to discharge its duty, the Court, in making its public interest finding, should * * * carefully consider the explanations of the government in the competitive impact statement and its responses to comments in order to determine whether those explanations are reasonable under the circumstances.''); S. Rep. No. 93–298, 93d Cong., 1st Sess., at 6 (1973) (''Where the public interest can be meaningfully evaluated simply on the basis of briefs and oral arguments, that is the approach that should be utilized.'').

IV. DIVESTITURES

A. Defendants are ordered and directed, within ninety (90) calendar days after the filing of the Complaint in this matter, or within five (5) days after notice of entry of the Final Judgment by the Court, whichever is later, to divest all their interests in the Parking Facilities in a manner consistent with this Final Judgment to an Acquirer or Acquirers acceptable to the United States in its sole discretion. The requirement to divest to an Acquirer or Acquirers is subject to the qualifications specified in Paragraph IV.K below.

B. In accomplishing the divestitures ordered by this Final Judgment, Defendants promptly shall make known, by usual and customary means, the availability of the Parking Facilities to be divested. Defendants shall inform any person making an inquiry that the divestiture is being made pursuant to this Final Judgment and provide such person with a copy of this Final Judgment. Defendants shall also offer to furnish to all prospective Acquirers, subject to customary confidentiality assurances, all information and documents in Defendants' possession, custody or control relating to the Parking Facilities customarily provided in a due diligence process, except such information or documents subject to attorney-client privilege or work-product doctrine. Defendants shall make available such information to the United States at the same time that such information is made available to any other person.

C. Defendants shall permit prospective Acquirers of the Parking Facilities to have reasonable access to personnel and to any and all environmental, zoning, building, and other permit documents and information, and to make inspection of the Parking Facilities and of any and all financial, operational, or other documents and information customarily provided as part of a due diligence process.

D. Defendants shall use their best efforts to accomplish the divestitures ordered by this Final Judgment as expeditiously as possible. The United States, in its sole discretion, may agree to one or more extensions of the time period for divestiture outlined in Paragraph IV.A not to exceed ninety (90) calendar days in total, and shall inform the Court in such circumstances.

E. Defendants shall provide the Acquirers and the United States information concerning the personnel involved in the operation of the Parking Facilities to enable the Acquirer to make offers of employment. Defendants shall not interfere with any negotiations by any Acquirer to employ any Standard or Central (or former Standard or Central) employee whose primary responsibility concerns any parking services business connected with the Parking Facilities. Defendants shall remove any impediments that may deter these employees from accepting such employment, including but not limited to, non-compete agreements. Defendants will not seek to enforce such non-compete agreements, nor will they seek to enforce any non-compete agreements against any employee whose responsibilities at a local or regional level include any Parking Facility and whose employment terminates within six (6) months after the date the transaction between the Defendants is completed.

F. Defendants shall warrant to the Acquirer(s) that each Parking Facility will be operational on the date of divestiture.

G. Defendants shall not take any action, direct or indirect, that will impede in any way the operation of the Parking Facilities, or take any action, direct or indirect, that would impede the divestiture of any Parking Facility.

H. Defendants shall warrant to Acquirer(s) that they did not cause during the term of their operation or management of the Parking Facility any condition that would constitute a material defect in the environmental, zoning, or other permit pertaining to the operation of the Parking Facility, and that following the sale of the Parking Facility, Defendants will not undertake, directly or indirectly, any challenges to the environmental, zoning, or other permits relating to the operation of the Parking Facility.

I. Defendants may not enter into any agreement to acquire, lease or operate, nor may they in any other manner acquire an interest in ownership or management of, any Parking Facility for the term of this Final Judgment, except that after three (3) years from the date that a Parking Facility is divested, nothing in this Final Judgment would prevent Defendants from acquiring a Parking Facility Agreement directly from the owner of such Parking Facility or the owner's agent through a process that does not involve a transaction with the operator of such Parking Facility.

. J. Unless the United States otherwise consents in writing, and subject to the qualification specified in Paragraph IV.K, the divestitures pursuant to Section IV, or by the trustee appointed pursuant to Section VI, shall include all of the Defendants' interests in the Parking Facilities, and be accomplished by divesting the Parking Facilities to an Acquirer or Acquirers in such a way as to satisfy the United States, in its sole discretion, that the Parking Facilities can and will be used by Acquirers as viable ongoing off-street parking services businesses, and the divestitures will remedy the harm alleged in the Complaint. The divestitures, whether pursuant to Section IV or Section VI of this Final Judgment, shall: (1) be made to an Acquirer or Acquirers that, in the United States' sole judgment, has the intent and capability (including the necessary managerial, operational, and financial capability) of competing effectively with the defendants in providing off-street parking services; and (2) shall be accomplished so as to satisfy the United States, in its sole discretion, that none of the terms of any agreement between Acquirers and Defendants gives Defendants the ability to raise unreasonably the Acquirers' costs, to lower the Acquirers' efficiency, or otherwise to interfere in the ability of Acquirers to compete effectively.

K. As an alternative to divestiture to a specific Acquirer or Acquirers, Defendants may, if contractually permitted to do so, accomplish divestitures by either: 1) terminating Parking Facility Agreements; or 2) allowing those Agreements to expire without renewal. All such divestitures must be preceded by notice to the affected facilities owners, and/or other persons with whom Defendants are in contractual relationships to operate the Parking Facilities, not less than sixty (60) days before the divestiture, or, if longer, such notice as is required by the applicable Parking Facility Agreements. With respect to all such divestitures, Defendants must comply with Paragraphs D, E, F, G, H, and I of Section IV. Divestitures accomplished under this paragraph must be completed in the time frame set forth in Paragraph IV.A. In addition, Defendants must comply with Paragraphs IV.B and IV.C to the extent that Defendants must make available the specified documents and information to every prospective successor in operation of the Parking Facilities if so requested by the owners of those properties, or by the owner's agents. At the time they give such notice, Defendants shall provide those owners and agents a copy of this Final Judgment, and inform them in writing of the applicable parts of Paragraphs IV.B and IV.C.

L. Within thirty (30) calendar days of the filing of the Complaint in this matter and every thirty (30) calendar days thereafter until the divestitures have been completed pursuant to Section IV or VI of this Final Judgment, Defendants shall deliver to the United States an affidavit as to the fact and manner of compliance with Sections IV, V, and VI of this Final Judgment. Each such affidavit shall describe in detail all efforts to accomplish the divestitures, including: 1) the name, address, and telephone number of each person who, during the preceding thirty (30) calendar days, made an offer to acquire, expressed an interest in acquiring, entered into negotiations to acquire, or was contacted or made an inquiry about acquiring, any interest in the Parking Facilities; 2) a description of all communications with any such person during that period; and 3) a description of all other efforts Defendants have taken to solicit an Acquirer or Acquirers for any and all Parking Facilities, and to provide required information to prospective Acquirers, including the limitations, if any, on such information. Assuming that the information set forth in the affidavit is true and complete, any objection by the United States to information provided by Defendants, including limitations on information provided by Defendants, shall be made within fourteen (14) days of receipt of such affidavit.

M. Beginning with the second affidavit delivered to the United States on the sixtieth day from the filing of the Complaint, and thereafter in every subsequent affidavit, Defendants shall identify any Parking Facilities that Defendants anticipate they cannot practically divest within thirty (30) days of the submission of the affidavit, and the basis for that belief.

N. For any Parking Facility not divested (and for which no definitive agreement to divest exists) within sixty (60) days of the filing of the Complaint, the United States shall have the right to require the Defendants to propose, within seven (7) days of receiving notice, alternative divestitures sufficient to

preserve competition. The United States may in its sole discretion accept or reject the alternative proposal. If the alternative is accepted, the alternative divested facility or facilities shall become a Parking Facility in place of the relevant Schedule A Parking Facility for all purposes under this Final Judgment, and the United States shall inform the Court of the change in a written report. If the proposed alternative is not accepted by the United States the Defendants must propose within five (5) days other alternative divestitures until an alternative acceptable to the United States is identified. The requirements of this paragraph will not apply to any Parking Facility for which divestitures will be accomplished under Paragraph IV.K.

O. Defendants shall keep records of all efforts made to preserve and divest each Parking Facility until one year after all the divestitures have been completed.

V. NOTICE OF PROPOSED DIVESTITURES

A Within two (2) business days following execution of a definitive divestiture agreement, contingent upon compliance with the terms of this Final Judgment, to effect, in whole or in part, any proposed divestiture pursuant to Section IV or VI of this Final Judgment, Defendants or the trustee, whichever is then responsible for effecting the divestiture, shall notify the United States of the proposed divestiture. If the trustee is responsible, it shall similarly notify Defendants. The notice shall set forth the details of the proposed divestiture and the name, address, and telephone number of each person not previously identified who offered to, or expressed an interest in or a desire to, acquire any management or leasehold interest in the Parking Facility to be divested, together with full details of same.

B. Within fifteen (15) calendar days of receipt by the United States of such notice, the United States may request from Defendants, the proposed Acquirer or Acquirers, any third party, or the trustee, additional information concerning the proposed divestiture and the proposed Acquirer or Acquirers, or any other potential Acquirer. Defendants and the trustee shall furnish any additional information requested within fifteen (15) calendar days of the receipt of the request, unless the parties shall otherwise agree.

C. Within thirty (30) calendar days after receipt of the notice, or within twenty (20) calendar days after the United States has been provided the additional information requested from Defendants, the proposed Acquirer or Acquirers, any third party, or the trustee, whichever is later, the United States shall provide written notice to Defendants and the trustee, if there is one, stating whether or not it objects to the proposed divestiture. If the United States provides written notice that it does not object, then the divestiture may be consummated, subject only to Defendants' limited right to object to the sale under Paragraph VI.C of this Final Judgment. Absent written notice that the United States does not object to the proposed divestiture, or upon objection by the United States, a proposed divestiture under Section IV or Section VI may not be consummated. Upon objection by Defendants under the provision in Paragraph VI.C, a divestiture proposed under Section VI shall not be consummated unless approved by the Court.

VI. APPOINTMENT OF TRUSTEE

A. If Defendants have not divested each of the Parking Facilities by the time and in the manner specified in Section IV of this Final Judgment, Defendants shall notify the United States of that fact in writing at the time the period for the relevant divestiture expires, identifying the Parking Facility or Facilities that have not been divested. Upon application of the United States, the Court shall appoint a trustee selected by the United States and approved by the Court to effect the divestiture of any such Parking Facilities, as designated by the United States.

B. After the appointment of a trustee becomes effective, only the trustee shall have the right to divest the Parking Facilities for which the divestiture period has expired. The trustee shall have the power and authority to accomplish any and all divestitures of Parking Facilities to an Acquirer or Acquirers acceptable to the United States at such price and on such terms as are then obtainable upon reasonable effort by the trustee, subject to the provisions of Sections IV, V, and VI of this Final Judgment, and shall have such other powers as the Court shall deem appropriate. Subject to Paragraph VI.C of this Final Judgment, the trustee may hire at the cost and expense of the Defendants any investment bankers, attorneys, or other agents reasonably necessary in the judgment of the trustee to assist in the divestitures or terminations, and such professionals and agents shall be accountable solely to the trustee. The trustee shall seek to accomplish the divestitures at the earliest possible time.

C. Defendants shall not object to a divestiture by the trustee on any ground other than the trustee's malfeasance. Any such objections by Defendants must be conveyed in writing to the United States and the trustee within ten (10) calendar days after the trustee has provided the notice required under Section V of this Final Judgment.

D. The trustee shall serve at the cost and expense of Defendants, on such terms and conditions as the United States approves. The trustee shall account for all monies derived from the divestiture of each Parking Facility divested by the trustee. The trustee shall also account for all costs and expenses incurred to accomplish the divestitures. After approval by the Court of the trustee's accounting, including any yet unpaid fees for its services and those of any professionals and agents retained by the trustee, any money remaining shall be paid to Defendants, or if the trustee's fees and costs exceed the monies derived from the divestitures the Defendants shall pay the difference, and the trust shall then be terminated. The compensation of the trustee and of any professionals and agents retained by the trustee shall be reasonable in light of the value of the divested facility and based on a fee arrangement providing the trustee with an incentive based on the price and terms of the divestiture, and the speed with which it is accomplished, timeliness being paramount.

E. Defendants shall use their best efforts to assist the trustee in accomplishing the required divestitures, including best efforts to effect all necessary regulatory approvals, and the consents of any owners or other persons whose consent may be needed for transfer of a Parking Facility Agreement. The trustee and any consultants, accountants, attorneys, and other persons retained by the trustee shall have full and complete access to the personnel, books, records, and facilities of the Parking Facilities to be divested, and Defendants shall develop financial or other information relevant to the businesses to be divested customarily provided in a due diligence process as the trustee may reasonably request, subject to customary confidentiality assurances. Defendants shall take no action to interfere with or impede the trustee's accomplishment of the divestitures.

F. After its appointment, the trustee shall file monthly reports with the parties and the Court setting forth the trustee's efforts to accomplish the divestitures ordered under this Final Judgment; provided, however, that to the extent such reports contain information that the trustee deems confidential, such reports shall not be filed in the public docket of the Court. Such reports shall include the name, address, and telephone number of each person who, during the preceding month, made an offer to acquire, expressed an interest in acquiring, entered into negotiations to acquire, or was contacted or made an inquiry about acquiring, any interest in the Parking Facilities to be divested, and shall describe in detail each contact with any such person during that period. The trustee shall maintain full records of all efforts made to divest the Parking Facilities.

G. If the trustee has not accomplished any divestiture with which it is charged within six months after it has been authorized to divest the relevant Parking Facility, the trustee thereupon shall promptly file with the Court a report setting forth (1) the trustee's efforts to accomplish the required divestitures, (2) the reasons, in the trustee's judgment, why the required divestitures have not been accomplished, and (3) the trustee's recommendations; provided, however, that to the extent such reports contain information that the trustee deems confidential, such reports shall not be filed in the public docket of the Court. The trustee shall at the same time furnish such report to the parties, who shall each have the right to make additional recommendations consistent with the purpose of the trust. The Court shall enter thereafter such orders as it shall deem appropriate in order to carry out the purpose of the Final Judgment which may, if necessary, include extending the trust and the term of the trustee's appointment by a period requested by the United States.

VII. ASSET PRESERVATION

A. Until the divestitures required by this Final Judgment have been accomplished, Defendants shall take all steps necessary to comply with the Asset Preservation Stipulation and Order entered by this Court. Defendants shall take no action that would jeopardize the divestitures ordered by this Court.

VIII. COMPLIANCE INSPECTION

A. For purposes of determining or securing compliance with the Final Judgment, or of determining whether the Final Judgment should be modified or vacated, and subject to any legally recognized privilege, from time to time authorized representatives of the United States Department of Justice Antitrust Division (''Antitrust Division''), including consultants and other persons retained by the United States, shall, upon written request of an authorized representative of the Assistant Attorney General in charge of the Antitrust Division, and on reasonable notice to Defendants, be permitted:

1. access during Defendants' office hours to inspect and copy, or, at the option of the United States, to require Defendants to provide hard copy or electronic copies of, all books, ledgers, accounts, records, data and documents in the possession, custody or control of Defendants, relating to any matters contained in this Final Judgment; and

2. to interview, either informally or on the record, Defendants' officers, employees, or agents, who may have their individual counsel present, regarding such matters. The interviews shall be subject to the reasonable convenience of the interviewee and without restraint or interference by Defendants.

B. Upon the written request of an authorized representative of the Assistant Attorney General in charge of the Antitrust Division, Defendants shall submit such written reports or respond to written interrogatories, under oath if requested, with respect to any of the matters contained in this Final Judgment as may be requested.

C. No information or documents obtained by the means provided in Paragraphs IV.L or Section VIII of this Final Judgment shall be divulged by a representative of the United States to any person other than an authorized representative of the Executive Branch of the United States, except in the course of legal proceedings to which the United States is a party (including grand jury proceedings), or for the purpose of securing compliance with this Final Judgment, or as otherwise required by law.

D. If at the time information or documents are furnished by Defendants to the United States, Defendants represent and identify in writing the material in any such information or documents to which a claim of protection may be asserted under Rule 26(c)(1)(G) of the Federal Rules of Civil Procedure, and Defendants mark each pertinent page of such material, ''Subject to claim of protection under Rule 26(c)(1)(G) of the Federal Rules of Civil Procedure,'' then the United States shall give Defendants ten (10) calendar days notice prior to divulging such material in any legal proceeding (other than a grand jury proceeding).

IX. RETENTION OF JURISDICTION

This Court retains jurisdiction to enable any party to this Final Judgment to apply to this Court at any time for such further orders and directions as may be necessary or appropriate to construe or carry out this Final Judgment, to modify any of its provisions, to enforce compliance, and to punish violations of its provisions.

X. FINANCING

Defendants shall not finance all or any part of any divestiture made pursuant to Sections IV or VI of this Final Judgment.

XI. EXPIRATION OF FINAL JUDGMENT

Unless this Court grants an extension, this Final Judgment shall expire ten (10) years from the date of its entry.

XII. PUBLIC INTEREST

Entry of this Final Judgment is in the public interest. The parties have complied with the requirements of the Antitrust Procedures and Penalties Act, 15 U.S.C. § 16, including making copies available to the public of this Final Judgment, the Competitive Impact Statement, and any comments thereon and the United States's responses to comments. Based upon the record before the Court, which includes the Competitive Impact Statement and any comments and response to comments filed with the Court, entry of this Final Judgment is in the public interest.

Dated . _____

Court approval subject to procedures of Antitrust Procedures and Penalties Act, 15 U.S.C. § 16.

United States District Judge

SCHEDULE A

City	Facility
Atlanta, GA	Central Facility CP6 at 3390 Peachtree Rd. NE
Baltimore, MD	Standard Facility SP5 at 400–404 Park Ave.
Bellevue, WA	Standard Facility SP7 at 600 106th Ave. NE
	Standard Facility SP8 at NE 8th St. & 106th Ave. NE
Boston, MA	Central Facility CP38 at 377 Commercial St.
	Standard Facility SP2 at 660 Washington St.
Bronx, NY	Central Facility CP4 at 70 East 162nd St.
Charlotte, NC	Central Facility CP2 at 207 South Church
	Central Facility CP5 at East West University, 501 E. Trade St.
	Central Facility CP8 at Gateway Village Garage, 800 West Trade St.
	Central Facility CP17 at 121 West Trade St.
Chicago, IL	Central Facility CP12 at 172 W Madison St.
	Central Facility CP14 at 540 N State St.
	Central Facility CP15 at 333 N Dearborn St.
	Central Facility CP27 at 816 N Clark St.
	Central Facility CP28 at 938 W North Ave.
	Central Facility CP29 at 1547 N Kingsbury St.
	Standard Facility SP13 at 1101 S State St.
	Standard Facility SP22 at 8 E 9th St.
	Standard Facility SP73 at 640 W Washington St.
	Standard Facility SP151 at 3134 N Clark St.
Cleveland, OH	Central Facility CP1 at 708 St Clair Ave
	Central Facility CP4 at 1801 East 12th St.
	Central Facility CP5 at 750 Vincent Ave
Columbus, OH	Central Facility CP2 at 55 E Long St.
	Central Facility CP5 at 21 E State St.
	Central Facility CP8 at 45 E Spring St.
	Central Facility CP13 at 107 S High St.
Dallas, TX	Central Facility CP15 at 400 N. Akard St.
	Central Facility CP18 at 811–817 Elm St.
	Standard Facility SP4 at 300 N Akard St.
Denver, CO	Central Facility CP4 at 1207 Cherokee St.
	Central Facility CP10 at 1131 Lincoln St.
	Central Facility CP13 at 1745 Sherman St.
	Central Facility CP14 at 1550 Welton St.
	Central Facility CP30 at 1735 Stout St.

SCHEDULE A—Continued

City	Facility
	Central Facility CP49 at El Jebel, 1750 Sherman St.
	Central Facility CP58 at 1530 Cleveland Pl.
	Standard Facility SP14 at 1221 Sherman St.
	Standard Facility SP19 at 1820 California St.
	Standard Facility SP22 at 1515 Arapahoe St.
	Standard Facility SP25 at 1999 Broadway
	Standard Facility SP29 at 621 17th St.
	Standard Facility SP32 at 1899 Wynkoop St.
	Standard Facility SP33 at 1825 Welton St.
	Standard Facility SP36 at 1543 Wazee St.
	Standard Facility SP39 at 1999 Broadway
Fort Myers, FL	Central Facility CP1 at 1530 Heitman St.
Fort Worth, TX	Central Facility CP4 at 110 W 7th St.
	Central Facility CP6 at 910 Houston St.
	Central Facility CP7 at 1011 Calhoun St.
	Central Facility CP9 at 1123 Calhoun St.
	Central Facility CP22 at 315 E 9th St.
	Central Facility CP23 at 921 Calhoun St.
	Central Facility CP24 at 1105 Calhoun St.
	Central Facility CP25 at 1115 Calhoun St.
	Central Facility CP26 at 1024 Monroe St.
Hoboken, NJ	Central Facility CP7 at 50 Bloomfield St.
Houston, TX	Central Facility CP17 at 1001 McKinney St.
	Central Facility CP38 at 1300 Leeland Ave.
	Central Facility CP81 at 1111 Main St.
	Standard Facility SP26 at 611 Clay St.
Kansas City, MO	Central Facility CP13 at 1100 Main St.
	Central Facility CP15 at 117 W 9th St.
	Central Facility CP30 at 920 Main St.
	Standard Facility SP4 at 2300 Main St.
	Standard Facility SP54 at 1221 Charlotte St.
	Standard Facility SP56 at 1600 Baltimore Ave.
Los Angeles, CA	Central Facility CP7 at 707 Wilshire Blvd.
	Central Facility CP22 at 936 Maple Ave.
	Central Facility CP27 at 905 Maple Ave.
	Central Facility CP33 at 1019 S Broadway
	Standard Facility SP5 at 7920 W Sunset Blvd.
	Standard Facility SP12 at 5757 Wilshire Blvd.
Miami, FL (including Coral Gables, FL)	Central Facility CP22 at 800 Brickell Ave.
	Standard Facility SP28 at 2 Alhambra Plaza
	Standard Facility SP30 at 2 Alhambra Plaza
Milwaukee, WI	Standard Facility SP6 at 1000 N Water St.
	Standard Facility SP7 at 724 N 2nd St.
	Standard Facility SP8 at 324 W Highland Ave. OR
	Central Facility C1 at 100 East Garage
	Central Facility C9 at 1128 N 6th Street
	Central Facility C13 at 1030 N 6th Street
	Central Facility C22 at 330 E Kilbourn
Minneapolis, MN	Central Facility CP7 at 80 South 8th St.
	Central Facility CP11 at 425 Park Ave.
	Central Facility CP12 at 400 South 3rd St.
	Central Facility CP15 at 600 Hennepin Ave.
	Central Facility CP18 at 102–120 First St. North
Nashville, TN	Standard Facility SP1 at 158 4th Ave. N
New Orleans, LA	Central Facility CP2 at 400 Elysian Fields Ave.
	Central Facility CP8 at 1515 Poydras St.
	Central Facility CP10 at 1555 Poydras St.
	Central Facility CP14 at 222 Loyola Ave.
	Central Facility CP16 at 1600 Cleveland Ave.
Newark, NJ	Standard Facility SP1 at 42 Mulberry St.
	Standard Facility SP2 at 42 Mulberry St.
Philadelphia, PA	Central Facility CP11 at 1717 Arch St.
	Central Facility CP13 at 1616 Sansom St.
	Central Facility CP18 at 1815 John F Kennedy Blvd.
	Central Facility CP23 at 1900 John F Kennedy Blvd.
Phoenix, AR	Central Facility CP12 at 3300 N Central Ave.
Rego Park, NY	Standard Facility SP4 at Rego Center I & II, 96–05 Queens Blvd.
	Standard Facility SP5 at Rego Center I & II, 95–05 Queens Blvd.
Richmond, VA	Central Facility CP4 at 100 E Marshall St.
	Central Facility CP6 at S 4th St & E Main St.
	Central Facility CP9 at N 8th St & E Marshall St.
	Standard Facility SP9 at 1531 E Cary St.

SCHEDULE A—Continued

City	Facility
Sacramento, CA	Central Facility CP13 at RAS, 3161 L St.
Tampa, FL	Central Facility CP13 at Hyatt Regency Tampa, Two Tampa City Center
	Central Facility CP14 at 400 N Ashley Dr.

[FR Doc. 2012–24336 Filed 10–2–12; 8:45 am]

BILLING CODE P

DEPARTMENT OF JUSTICE

Federal Bureau of Investigation

Meeting of the Compact Council for the National Crime Prevention and Privacy Compact

AGENCY: Federal Bureau of Investigation, DOJ.

ACTION: Meeting notice.

SUMMARY: The purpose of this notice is to announce a meeting of the National Crime Prevention and Privacy Compact Council (Council) created by the National Crime Prevention and Privacy Compact Act of 1998 (Compact). Thus far, the Federal Government and 29 states are parties to the Compact which governs the exchange of criminal history records for licensing, employment, and similar purposes. The Compact also provides a legal framework for the establishment of a cooperative federal-state system to exchange such records.

The United States Attorney General appointed 15 persons from state and federal agencies to serve on the Council. The Council will prescribe system rules and procedures for the effective and proper operation of the Interstate Identification Index system for noncriminal justice purposes.

Matters for discussion are expected to include:

(1) Best Practices Guide: The Outsourcing of Noncriminal Justice Administrative Functions

(2) The Report on the Operational Analysis System Integrity Support (OASIS) Group's Study of Fingerprint Image Submission (FIS) Enhancement Procedures

(3) Sharing Information on Lessons Learned During National Fingerprint File (NFF) Implementation

The meeting will be open to the public on a first-come, first-seated basis. Any member of the public wishing to file a written statement with the Council or wishing to address this session of the Council should notify the Federal Bureau Of Investigation (FBI) Compact Officer, Mr. Gary S. Barron at (304) 625–2803, at least 24 hours prior to the start of the session. The notification should contain the individual's name and corporate designation, consumer affiliation, or government designation, along with a short statement describing the topic to be addressed and the time needed for the presentation. Individuals will ordinarily be allowed up to 15 minutes to present a topic.

Dates and Times: The Council will meet in open session from 9 a.m. until 5 p.m., on November 14–15, 2012.

ADDRESSES: The meeting will take place at the W Atlanta Midtown, 188 14th Street Northeast, Atlanta, Georgia, telephone (404) 892–6000.

FOR FURTHER INFORMATION CONTACT: Inquiries may be addressed to Mr. Gary S. Barron, FBI Compact Officer, Module D3, 1000 Custer Hollow Road, Clarksburg, West Virginia 26306, telephone (304) 625–2803, facsimile (304) 625–2868.

Dated: September 19, 2012.

Gary S. Barron,

FBI Compact Officer, Criminal Justice Information Services Division, Federal Bureau of Investigation.

[FR Doc. 2012–24235 Filed 10–2–12; 8:45 am]

BILLING CODE 4410–02–P

DEPARTMENT OF JUSTICE

Office of Justice Programs

[OJP (NIJ) Docket No. 1607]

Draft of SWGDOC Standard Classification of Typewritten Text

AGENCY: National Institute of Justice, DOJ.

ACTION: Notice and request for comments.

SUMMARY: In an effort to obtain comments from interested parties, the U.S. Department of Justice, Office of Justice Programs, National Institute of Justice, Scientific Working Group for Forensic Document Examination will make available to the general public a draft document entitled, ''SWGDOC Standard Classification of Typewritten Text''. The opportunity to provide comments on this document is open to forensic document examiners, law enforcement agencies, organizations, and all other stakeholders and interested parties. Those individuals wishing to obtain and provide comments on the draft document under consideration are directed to the following Web site: *http://www.swgdoc.org.*

DATES: Comments must be received on or before November 21, 2012.

FOR FURTHER INFORMATION CONTACT: Patricia Kashtan, by telephone at 202–353–1856 [**Note:** this is not a toll-free telephone number], or by email at *Patricia.Kashtan@usdoj.gov.*

John Laub,

Director, National Institute of Justice.

[FR Doc. 2012–24316 Filed 10–2–12; 8:45 am]

BILLING CODE 4410–18–P

NATIONAL ARCHIVES AND RECORDS ADMINISTRATION

Privacy Act of 1974, as Amended; System of Records Notices

AGENCY: National Archives and Records Administration (NARA).

ACTION: Notice of the establishment of new privacy system of record, NARA 44.

SUMMARY: The National Archives and Records Administration (NARA) proposes to add a system of records to its existing inventory of systems subject to the Privacy Act of 1974, as amended (5 U.S.C. 552(a)) (''Privacy Act''). In this notice, NARA publishes NARA 44, Reasonable Accommodation Request Records.

DATES: This new system of records, NARA 44, will become effective November 2, 2012 without further notice unless comments are received that result in further revision. NARA will publish a new notice if the effective date is delayed to review comments or if changes are made based on comments received. To be assured of consideration, comments should be received on or before the date above.

ADDRESSES: You may submit comments, identified by SORN number NARA 44, by one of the following methods:

- *Federal e-Rulemaking Portal: http://www.regulations.gov.* Follow the instructions for submitting comments.
- *Fax:* 301–837–0293.
- *Mail:* Kimberly Keravuori, Strategy Division (SP), Room 4100, National

Archives and Records Administration, 8601 Adelphi Road, College Park, MD 20740–6001.

FOR FURTHER INFORMATION CONTACT: Ismael Martinez, Equal Employment Office Director, National Archives and Records Administration, 8601 Adelphi Road, College Park, MD 20740–6001. Telephone: 301–837–1849. Fax: 301–837–0869.

SUPPLEMENTARY INFORMATION: The notice for this system of records states the name and the location of the record system, the authority for and manner of its operation, the categories of individuals that it covers, the types of records that it contains, the sources of information in the records, and the proposed ''routine uses'' of the system of records. The notice also includes the business address of the NARA official who will inform interested persons of the procedures whereby they may gain access to, and correct, records pertaining to themselves.

The Privacy Act provides certain safeguards for an individual against an invasion of personal privacy by requiring Federal agencies to disseminate any record of identifiable personal information in a manner that assures that such action is for a necessary and lawful purpose, that the information is current and accurate for its intended use, and that adequate safeguards are provided to prevent misuse of such information. NARA intends to follow these principles in transferring information to another agency or individual as a ''routine use,'' including assurance that the information is relevant for the purposes for which it is transferred.

Dated: September 25, 2012.

David S. Ferriero,

Archivist of the United States.

NARA Privacy Act Systems: NARA 44

SYSTEM NAME:

Reasonable Accommodation Request Records.

SYSTEM LOCATION:

The reasonable accommodation request files are maintained in the Office of Equal Employment at the National Archives in College Park. Address: 8601 Adelphi Road, Room 4417, College Park, MD 20740.

CATEGORIES OF INDIVIDUALS COVERED BY THE SYSTEM:

Individuals covered by this system include current and former NARA employees and applicants who have requested accommodation pursuant to NARA policy for processing reasonable accommodation requests for employees and applicants with disabilities.

CATEGORIES OF RECORDS IN THE SYSTEM:

Reasonable accommodation request records may contain some or all of the following records: requests for reasonable accommodation including medical records, notes or records made during consideration of requests, and decisions on requests. These records may contain: the employee or applicant's name, email address, mailing address, phone number, medical information, and any additional information provided by the employee related to the processing of the request. If an accommodation request is made by a family member, health professional, or representative of a NARA employee or applicant, the records may also contain the requestor's name, email address, mailing address, phone number, and any additional information provided by the requestor relating to the processing of the request.

AUTHORITY FOR MAINTENANCE OF THE SYSTEM:

5 U.S.C. 552a(a)(3), as amended.

44 U.S.C. 2104(a), as amended.

The Americans with Disabilities Act of 1990, as amended.

29 U.S.C. 791.

Executive Order 13164.

29 CFR part 1614.

ROUTINE USES OF RECORDS MAINTAINED IN THE SYSTEM, INCLUDING CATEGORIES OF USERS AND THE PURPOSES OF SUCH USES:

The Diversity Program Manager (DPM) at NARA maintains the information relating to any reasonable accommodation request. Routine uses A, B, C, D, E, F, G, and H listed in Appendix A apply to this system.

POLICIES AND PRACTICES FOR STORING, RETRIEVING, ACCESSING, RETAINING, AND DISPOSING OF RECORDS IN THE SYSTEM:

STORAGE:

Paper and electronic records.

RETRIEVABILITY:

Information in these case files may be retrieved by the name of the employee or applicant, or request number.

SAFEGUARDS:

During business hours, paper records are maintained in areas accessible only to authorized NARA personnel. Electronic records are accessible via passwords from workstations located in attended offices or through a secure remote access network. After business hours, buildings have security guards and/or secured doors, and all entrances are monitored by electronic surveillance equipment.

RETENTION AND DISPOSAL:

NARA reasonable accommodation request records are temporary records and are destroyed in accordance with the disposition instructions in the NARA Records Schedule supplement to FILES 203, the NARA Files Maintenance and Records Disposition Manual. Individuals may request a copy of the disposition instructions from the NARA Privacy Act Officer.

SYSTEM MANAGER AND ADDRESS:

For these case files, the system manager is Ismael Martinez, Equal Employment Office Director, National Archives and Records Administration, 8601 Adelphi Road, College Park, MD 20740–6001. Telephone: 301–837–1849. Fax: 301–837–0869.

NOTIFICATION PROCEDURE:

Individuals interested in inquiring about their records should notify the NARA Privacy Act Officer at the Privacy Act Office, Room 3110, National Archives and Records Administration, 8601 Adelphi Road, College Park, MD 20740–6001.

RECORDS ACCESS PROCEDURES:

Individuals who wish to gain access to their records should notify the NARA Privacy Act Officer at the address listed above.

CONTESTING RECORDS PROCEDURES:

NARA rules for contesting the contents and appealing initial determinations are found in 36 CFR part 1202.

RECORDS SOURCE CATEGORIES:

Information in these reasonable accommodation files is obtained from NARA employees, applicants, and any family member, health professional, or representative of a NARA employee or applicant, who request such accommodation under the Rehabilitation Act.

[FR Doc. 2012–24312 Filed 10–2–12; 8:45 am]

BILLING CODE 7515–01–P

NATIONAL COUNCIL ON DISABILITY

Sunshine Act Meetings

TIME AND DATES: The Members of the National Council on Disability (NCD) will hold a quarterly meeting on Monday, October 22, 2012, 3:45 p.m.–5 p.m., ET; and on Tuesday, October 23, 2012, 9 a.m.–5 p.m., ET.

PLACE: The meeting will occur in-person at K&L Gates law firm, 1601 K Street, NW., at the corner of 16th and K Streets, Washington, DC 20006. Interested parties may join the meeting in person

or may join the phone line in a listening-only capacity (with the exception of the public comment period) using the following call-in number: 1–888–438–5453; Passcode: 7040549. If asked, the conference call leader's name is Aaron Bishop.

MATTERS TO BE CONSIDERED: The Council will receive updates from the Council's standing committees and will deliberate on several policy project proposals on topics including automated vehicle technology, vocational rehabilitation, home- and community-based services, and veterans issues, including re-entry of veterans with disabilities into civilian life. The Council will also use the quarterly meeting to release and provide a policy briefing on a new NCD policy paper on deinstitutionalization (''Deinstitutionalization: Unfinished Business'') and its accompanying online toolkit.

Only the Governance and Planning Committee will provide its committee report on Monday, October 22, from 4:30–5 p.m., ET. The remaining committee reports, including deliberation on proposed policy projects, will resume on Tuesday, October 23, at 9:15 a.m., ET. During those deliberations, NCD Members will also discuss the format and topical focus for its 2013 Progress Report to the President and U.S. Congress during the morning of October 23. NCD's annual Progress Report is a statutorily mandated report intended to provide an assessment of the status of the nation in achieving equality of opportunity, economic self-sufficiency, independent living, and inclusion and integration into all aspects of society for people with disabilities, along with recommendations for policy changes. NCD is charged by Congress with seeking input from the public, particularly people with disabilities, in determining the issues on which to focus, and the findings, conclusions, and recommendations in the report. Accordingly, NCD welcomes public comment on October 23, from 4:00–4:30 p.m., ET, specific to suggestions regarding the focus, findings, conclusions, and recommendations of it 2013 Progress Report. The policy briefing on NCD's ''Deinstitutionalization: Unfinished Business'' policy paper will occur at approximately 2:15 p.m. on Tuesday, October 23.

PUBLIC COMMENT: The public comment period will take place on Tuesday, October 23, 2012, from 4 p.m.–4:30 p.m., ET. Although comments on any topic are accepted, NCD welcomes public comment specific to suggestions regarding the focus, findings, conclusions, and recommendations of it 2013 Progress Report.

Any individuals interested in providing public comment will be asked to provide their names and their organizational affiliations, if applicable, and to limit their comments to three minutes. Individuals may also provide public comment by sending their comments in writing to Lawrence Carter-Long, Public Affairs Specialist, at *lcarterlong@ncd.gov*, using the subject line of ''Public Comment.''

CONTACT PERSON FOR MORE INFORMATION: Anne Sommers, NCD, 1331 F Street, NW., Suite 850, Washington, DC 20004; 202–272–2004 (V), 202–272–2074 (TTY).

ACCOMMODATIONS: Those who plan to attend and require accommodations should notify NCD as soon as possible to allow time to make arrangements.

Dated: September 28, 2012.

Aaron Bishop,

Executive Director.

[FR Doc. 2012–24449 Filed 10–1–12; 11:15 am]

BILLING CODE 6820–MA–P

NATIONAL SCIENCE FOUNDATION

Notice of Permit Applications Received Under the Antarctic Conservation Act of 1978

AGENCY: National Science Foundation.

ACTION: Notice of permit applications received under the Antarctic Conservation Act of 1978, Public Law 95–541.

SUMMARY: The National Science Foundation (NSF) is required to publish a notice of permit applications received to conduct activities regulated under the Antarctic Conservation Act of 1978. NSF has published regulations under the Antarctic Conservation Act at Title 45 Part 670 of the Code of Federal Regulations. This is the required notice of permit applications received.

DATES: Interested parties are invited to submit written data, comments, or views with respect to this permit application by November 2, 2012. This application may be inspected by interested parties at the Permit Office, address below.

ADDRESSES: Comments should be addressed to Permit Office, Room 755, Office of Polar Programs, National Science Foundation, 4201 Wilson Boulevard, Arlington, Virginia 22230.

FOR FURTHER INFORMATION CONTACT: Polly A. Penhale at the above address or (703) 292–7420.

SUPPLEMENTARY INFORMATION: The National Science Foundation, as directed by the Antarctic Conservation Act of 1978 (Pub. L. 95–541), as amended by the Antarctic Science, Tourism and Conservation Act of 1996, has developed regulations for the establishment of a permit system for various activities in Antarctica and designation of certain animals and certain geographic areas a requiring special protection. The regulations establish such a permit system to designate Antarctic Specially Protected Areas.

The applications received are as follows:

Permit Application: 2013–022

1. *Applicant:* Mahlon C. Kennicutt, II, Department of Oceanography, Rm. 608 Eller Oceanography & Meteorology Bldg., 3146 Texas A&M University, College Station. TX 77843–3146.

Activity for Which Permit is Requested

Take and Enter Antarctic Specially Protected Areas. The applicant plans to enter ASPA158–Hut Point, ASPA 122–Arrival Heights, ASPA 157–Backdoor Bay, Cape Royds, Turtle Rock, and Bratina Island to collect soil samples and take permafrost measurements. These sites are specifically targeted because of the nature of their geology, climatic influences, and topography. Two sites will be sampled as reference controls (Cape Royds–ASPA 157 and Bratina Island) for the study of temporal and spatial scales of various types of disturbances in and around McMurdo Station. The other sites (Arrival Heights–ASPA 122 and Hut Point–ASPA 158), have been sampled in past field seasons and are slated to be sampled as part of the ongoing environmental monitoring program.

Location

ASPA158–Hut Point, ASPA 122–Arrival Heights, ASPA 157–Backdoor Bay, Cape Royds, Turtle Rock, and Bratina Island.

Dates

December 12, 2012 to December 31, 2012.

Permit Application: 2013–023

Applicant: Diana H. Wall, Natural Resource Ecology Laboratory, Dept. 1499, Colorado State University, Fort Collins, CO 80526–1499.

Activity for Which Permit is Requested

Enter Antarctic Specially Protected Areas and Import into the USA. The applicant plans to enter ASPA 116–New

College Valley, Cape Bird, ASPA 121–Cape Royds, and ASPA 124–Cape Crozier to collect soils and associated terrestrial invertebrates found in ornithogenic soils from penguin rookeries. The intent of the survey is to describe suitable habitats in ornithogenic soils of Ross Island and to compare these habitats with those identified in the Dry Valleys.

Location

ASPA 116–New College Valley, Cape Bird, ASPA 121–Cape Royds, and ASPA 124–Cape Crozier.

Dates

January 1, 2012 to February 25, 2012.

Nadene G. Kennedy,

Permit Officer, Office of Polar Programs.

[FR Doc. 2012–24241 Filed 10–2–12; 8:45 am]

BILLING CODE 7555–01–P

NATIONAL SCIENCE FOUNDATION

Proposal Review Panel for Computing Communication Foundations; Notice of Meeting

In accordance with the Federal Advisory Committee Act (Pub. L. 92–463, as amended), the National Science Foundation announces the following meeting:

NAME: Site Visit, Proposal Panel Review for Expeditions in Computing Program (#1192).

DATE/TIME:

October 15, 2012 7 p.m.–9 p.m.
October 16, 2012 8 a.m.–8 p.m.
October 17, 2012 8:30 a.m.–3 p.m.

PLACE: University of Minnesota—Twin Cities, Minneapolis, MN.

TYPE OF MEETING: Partial Closed.

CONTACT PERSON: Vasant G. Honavar, National Science Foundation, 4201 Wilson Boulevard, Room 1125, Arlington, VA 22230. Telephone: (703) 292–7129.

PURPOSE OF MEETING: To assess the progress of the EIC Award: 1029711, ''Collaborative Research: Mining Climate and Ecosystem Data'', and to provide advice and recommendations concerning further NSF support for the Center.

AGENDA:

Monday, October 15, 2012

7 p.m. to 9 p.m. Closed

Site Team and NSF Staff meets to discuss Site Visit materials, review process and charge.

Tuesday, October 16, 2012

8 a.m. to 1 p.m. to Open

Presentations by Awardee Institution, faculty staff and students, to Site Team and NSF Staff. Discussions and question and answer sessions.

1 p.m.–8 p.m. Closed

Draft report on education and research activities.

Wednesday, October 17, 2012

8:30 a.m.–noon Open

Response presentations by Awardee Institution faculty staff to Site Team and NSF Staff. Discussions and question and answer sessions.

Noon to 3 p.m. Closed

Complete written site visit report with preliminary recommendations.

Reason for Closing: The proposals being reviewed include information of a proprietary or confidential nature, including technical information; financial data, such as salaries; and personal information concerning individuals associated with the proposals. These matters are exempt under 5 U.S.C. 552b(c), (4) and (6) of the Government in the Sunshine Act.

Dated: September 28, 2012.

Susanne Bolton,

Committee Management Officer.

[FR Doc. 2012–24309 Filed 10–2–12; 8:45 am]

BILLING CODE 7555–01–P

NUCLEAR REGULATORY COMMISSION

[[NRC–2012–0231]

Control of Ferrite Content in Stainless Steel Weld Metal

AGENCY: Nuclear Regulatory Commission.

ACTION: Draft regulatory guide; request for comment.

SUMMARY: The U.S. Nuclear Regulatory Commission (NRC or the Commission) is issuing for public comment draft regulatory guide (DG), DG–1279, ''Control of Ferrite Content in Stainless Steel Weld Metal.'' This guide describes a method that the NRC staff considers acceptable for controlling ferrite content in stainless steel weld metal. Revision 4 updates the guide to remove references to outdated standards and to remove an appendix that has been incorporated into relevant specifications.

DATES: Submit comments by December 2, 2012. Comments received after this date will be considered if it is practical to do so, but the NRC is able to ensure consideration only for comments received on or before this date. Although a time limit is given, comments and suggestions in connection with items for inclusion in guides currently being developed or improvements in all published guides are encouraged at any time.

ADDRESSES: You may access information and comment submissions related to this document, which the NRC possesses and are publicly available, by searching on *http://www.regulations.gov* under Docket ID NRC–2012–0231. You may submit comments by any of the following methods:

- *Federal Rulemaking Web site:* Go to *http://www.regulations.gov* and search for Docket ID NRC–2012–0231. Address questions about NRC dockets to Carol Gallagher; telephone: 301–492–3668; email: *Carol.Gallagher@nrc.gov.*
- *Mail comments to:* Cindy Bladey, Chief, Rules, Announcements, and Directives Branch (RADB), Office of Administration, Mail Stop: TWB–05–B01M, U.S. Nuclear Regulatory Commission, Washington, DC 20555–0001.
- *Fax comments to:* RADB at 301–492–3446.

For additional direction on accessing information and submitting comments, see ''Accessing Information and Submitting Comments'' in the **SUPPLEMENTARY INFORMATION** section of this document.

FOR FURTHER INFORMATION CONTACT: Mekonen Bayssie, Office of Nuclear Regulatory Research, U.S. Nuclear Regulatory Commission, Washington, DC 20555–0001; telephone: 301–251–7489 or email: *Mekonen.Bayssie@nrc.gov.*

SUPPLEMENTARY INFORMATION:

I. Accessing Information and Submitting Comments

A. Accessing Information

Please refer to Docket ID NRC–2012–0231 when contacting the NRC about the availability of information regarding this document. You may access information related to this document, which the NRC possesses and are publicly available, by any of the following methods:

- *Federal Rulemaking Web site:* Go to *http://www.regulations.gov* and search for Docket ID NRC–2012–0231.
- *NRC's Agencywide Documents Access and Management System (ADAMS):* You may access publicly available documents online in the NRC Library at *http://www.nrc.gov/reading-rm/adams.html.* To begin the search, select ''ADAMS Public Documents'' and then select ''Begin Web-based ADAMS Search.'' For problems with ADAMS, please contact the NRC's Public Document Room (PDR) reference staff at 1–800–397–4209, 301–415–4737, or by email to *pdr.resource@nrc.gov.* The draft

regulatory guide is available electronically under ADAMS Accession No. ML12024A004. The regulatory analysis may be found in ADAMS under Accession No. ML12024A014.

Regulatory guides are not copyrighted, and NRC approval is not required to reproduce them.

• *NRC's PDR:* You may examine and purchase copies of public documents at the NRC's PDR, Room O1–F21, One White Flint North, 11555 Rockville Pike, Rockville, Maryland 20852.

B. Submitting Comments

Please include Docket ID NRC–2012–0231 in the subject line of your comment submission, in order to ensure that the NRC is able to make your comment submission available to the public in this docket.

The NRC cautions you not to include identifying or contact information in comment submissions that you do not want to be publicly disclosed. The NRC posts all comment submissions at *http://www.regulations.gov* as well as enters the comment submissions into ADAMS. The NRC does not edit comment submissions to remove identifying or contact information.

If you are requesting or aggregating comments from other persons for submission to the NRC, then you should inform those persons not to include identifying or contact information in their comment submissions that they do not want to be publicly disclosed. Your request should state that the NRC will not edit comment submissions to remove such information before making the comment submissions available to the public or entering the comment submissions into ADAMS.

II. Further Information

The NRC is issuing for public comment a draft guide in the NRC's ''Regulatory Guide'' series. This series was developed to describe and make available to the public such information as methods that are acceptable to the NRC staff for implementing specific parts of the NRC's regulations, techniques that the staff uses in evaluating specific problems or postulated accidents, and data that the staff needs in its review of applications for permits and licenses.

The draft regulatory guide, entitled, ''Control of Ferrite Content in Stainless Steel Weld Metal,'' is temporarily identified by its task number, DG–1279. The DG–1279 is proposed revision 4 of Regulatory Guide 1.31, dated April 1978. Revision 4 updates the guide to remove references to outdated standards and to remove an appendix that has been incorporated into relevant specifications.

This guide describes a method that the staff of the U.S. Nuclear Regulatory Commission (NRC) considers acceptable for controlling ferrite content in stainless steel weld metal. This guide is intended to supplement the ASME Code requirements to ensure control of delta ferrite in welds in austenitic stainless steel core support structures, reactor internals, and Class 1, 2, and 3 components. The NRC staff seeking input on the latest technical standards that should be in this guide.

Dated at Rockville, Maryland, this 26th day of September, 2012.

Dated at Rockville, Maryland, this 26th day of September, 2012.

For the Nuclear Regulatory Commission.

Thomas H. Boyce,

Chief, Regulatory Guide Development Branch, Division of Engineering, Office of Nuclear Regulatory Research.

[FR Doc. 2012–24390 Filed 10–2–12; 8:45 am]

BILLING CODE 7590–01–P

NUCLEAR REGULATORY COMMISSION

[NRC–2012–0100]

Burnup Credit in the Criticality Safety Analyses of Pressurized Water Reactor Spent Fuel in Transportation and Storage Casks

AGENCY: Nuclear Regulatory Commission.

ACTION: Interim staff guidance; issuance.

SUMMARY: The U.S. Nuclear Regulatory Commission (NRC or the Commission) is issuing a Spent Fuel Storage and Transportation Interim Staff Guidance (SFST–ISG)–8, Revision 3, entitled, ''Burnup Credit in the Criticality Safety Analyses of PWR [Pressurized Water Reactor] Spent Fuel in Transportation and Storage Casks.'' This SFST–ISG provides guidance for use by NRC staff when reviewing applications requesting burnup credit in the criticality safety analyses of pressurized water reactor spent nuclear fuel (SNF) in transportation packages and storage casks. SFST–ISG–8, Revision 3, includes two major changes in the staff recommendations: (1) optional credit for fission product and minor actinide neutron absorbing isotopes in the SNF composition, and (2) misload analyses and additional administrative procedures in lieu of a burnup measurement at the time of loading.

ADDRESSES: Please refer to Docket ID NRC–2012–0100 when contacting the NRC about the availability of information regarding this document. You may access information related to this document, which the NRC possesses and are publicly available, using any of the following methods:

• *Federal Rulemaking Web site:* Go to *http://www.regulations.gov* and search for Docket ID NRC–2012–0100. Address questions about NRC dockets to Carol Gallagher; telephone: 301–492–3668; email: *Carol.Gallagher@nrc.gov.*

• *NRC's Interim Staff Guidance Web Site:* The SFST–ISG documents are also available online under the ''Spent Fuel Storage and Transportation'' heading at *http://www.nrc.gov/reading-rm/doc-collections/#int.*

• *NRC's Agencywide Documents Access and Management System (ADAMS):* You may access publicly available documents online in the NRC Library at *http://www.nrc.gov/reading-rm/adams.html.* To begin the search, select ''ADAMS Public Documents'' and then select ''Begin Web-based ADAMS Search.'' For problems with ADAMS, please contact the NRC's Public Document Room (PDR) reference staff at 1–800–397–4209, 301–415–4737, or by email to *pdr.resource@nrc.gov.* The SFST–ISG–8, Revision 3, is available in ADAMS under Accession No. ML12261A433.

• *NRC's PDR:* You may examine and purchase copies of public documents at the NRC's PDR, Room O1–F21, One White Flint North, 11555 Rockville Pike, Rockville, Maryland 20852.

FOR FURTHER INFORMATION CONTACT: Mr. Andrew Barto, Office of Nuclear Material Safety and Safeguards, U.S. Nuclear Regulatory Commission, Washington, DC 20555–0001; telephone: 301–492–3336; email: *Andrew.Barto@nrc.gov.*

SUPPLEMENTARY INFORMATION:

I. Introduction

The NRC issues SFST–ISGs to communicate insights and lessons learned and to address emergent issues not covered in SFST Standard Review Plans. In this way, the NRC staff and stakeholders may use the guidance in an SFST–ISG document before it is incorporated into a formal SRP revision.

The NRC staff has developed SFST–ISG–8, Revision 3 to (a) incorporate the results of burnup credit criticality safety research performed since the last SFST–ISG–8 revision in 2002 into the limits for the licensing basis, (b) provide recommendations regarding advanced isotopic depletion and criticality code validation techniques, (c) provide recommendations regarding credit for fission product neutron absorbing nuclides in the criticality analysis for

SNF systems, (d) add a recommendation for an optional misload analysis coupled with additional administrative SNF system loading procedures, in lieu of a direct burnup measurement, and (e) make miscellaneous and editorial changes.

II. Further Information

The draft SFST–ISG–8, Revision 3, was published in the **Federal Register** on May 2, 2012 (77 FR 26050) for a 30-day public comment period. The public comment period closed on June 1, 2012. A table containing the comments received from external stakeholders and the staff responses to these comments is available in ADAMS under Accession No. ML12261A432.

Dated at Rockville, Maryland, this 26th day of September, 2012.

For the Nuclear Regulatory Commission.

Mark Lombard,

Director, Division of Spent Fuel Storage and Transportation, Office of Nuclear Material Safety and Safeguards.

[FR Doc. 2012–24396 Filed 10–2–12; 8:45 am]

BILLING CODE 7590–01–P

NUCLEAR REGULATORY COMMISSION

Advisory Committee on Reactor Safeguards (ACRS) Meeting of the ACRS Subcommittee on Digital Instrumentation and Control Systems; Notice of Meeting

The ACRS Subcommittee on Digital Instrumentation and Control Systems (DI&C) will hold a meeting on October 30, 2012, Room T–2B1, 11545 Rockville Pike, Rockville, Maryland.

The entire meeting will be open to public attendance.

The agenda for the subject meeting shall be as follows:

Tuesday, October 30, 2012–8:30 a.m. until 5 p.m.

The Subcommittee will review and discuss the Design Specific Review Standard (DSRS) for Instrumentation and Control of the Babcock & Wilcox (B&W) mPower reactor. The Subcommittee will hear presentations by and hold discussions with the NRC staff and other interested persons regarding this matter. The Subcommittee will gather information, analyze relevant issues and facts, and formulate proposed positions and actions, as appropriate, for deliberation by the Full Committee.

Members of the public desiring to provide oral statements and/or written comments should notify the Designated Federal Official (DFO), Christina Antonescu (Telephone 301–415–6792 or Email: *Christina.Antonescu@nrc.gov*) five days prior to the meeting, if possible, so that appropriate arrangements can be made. Thirty-five hard copies of each presentation or handout should be provided to the DFO thirty minutes before the meeting. In addition, one electronic copy of each presentation should be emailed to the DFO one day before the meeting. If an electronic copy cannot be provided within this timeframe, presenters should provide the DFO with a CD containing each presentation at least thirty minutes before the meeting. Electronic recordings will be permitted only during those portions of the meeting that are open to the public. Detailed procedures for the conduct of and participation in ACRS meetings were published in the **Federal Register** on October 17, 2011, (76 FR 64126–64127).

Detailed meeting agendas and meeting transcripts are available on the NRC Web site at *http://www.nrc.gov/reading-rm/doc-collections/acrs.* Information regarding topics to be discussed, changes to the agenda, whether the meeting has been canceled or rescheduled, and the time allotted to present oral statements can be obtained from the Web site cited above or by contacting the identified DFO. Moreover, in view of the possibility that the schedule for ACRS meetings may be adjusted by the Chairman as necessary to facilitate the conduct of the meeting, persons planning to attend should check with these references if such rescheduling would result in a major inconvenience.

If attending this meeting, please enter through the One White Flint North building, 11555 Rockville Pike, Rockville, MD. After registering with security, please contact Mr. Theron Brown (Telephone 240–888–9835) to be escorted to the meeting room.

Dated: September 26, 2012.

Antonio Dias,

Technical Advisor, Advisory Committee on Reactor Safeguards.

[FR Doc. 2012–24345 Filed 10–2–12; 8:45 am]

BILLING CODE 7590–01–P

NUCLEAR REGULATORY COMMISSION

Advisory Committee on Reactor Safeguards (ACRS) Meeting of the ACRS Subcommittee on Reliability and PRA; Notice of Meeting

The ACRS Subcommittee on Reliability and PRA will hold a meeting on October 19, 2012, Room T–2B1, 11545 Rockville Pike, Rockville, Maryland.

The entire meeting will be open to public attendance.

The agenda for the subject meeting shall be as follows:

Friday, October 19, 2012–1 p.m. until 5 p.m.

The Subcommittee will be briefed on the guidance on the treatment of uncertainties associated with Probabilistic Risk Assessments (PRAs) in risk-informed applications. The Subcommittee will hear presentations by and hold discussions with the NRC staff, Industry, and other interested persons regarding this matter. The Subcommittee will gather information, analyze relevant issues and facts, and formulate proposed positions and actions, as appropriate, for deliberation by the Full Committee.

Members of the public desiring to provide oral statements and/or written comments should notify the Designated Federal Official (DFO), John Lai (Telephone 301–415–5197 or Email: *John.Lai@nrc.gov*) five days prior to the meeting, if possible, so that appropriate arrangements can be made. Thirty-five hard copies of each presentation or handout should be provided to the DFO thirty minutes before the meeting. In addition, one electronic copy of each presentation should be emailed to the DFO one day before the meeting. If an electronic copy cannot be provided within this timeframe, presenters should provide the DFO with a CD containing each presentation at least thirty minutes before the meeting. Electronic recordings will be permitted only during those portions of the meeting that are open to the public. Detailed procedures for the conduct of and participation in ACRS meetings were published in the **Federal Register** on October 17, 2011, (76 FR 64126–64127).

Detailed meeting agendas and meeting transcripts are available on the NRC Web site at *http://www.nrc.gov/reading-rm/doc-collections/acrs.* Information regarding topics to be discussed, changes to the agenda, whether the meeting has been canceled or rescheduled, and the time allotted to present oral statements can be obtained from the Web site cited above or by contacting the identified DFO. Moreover, in view of the possibility that the schedule for ACRS meetings may be adjusted by the Chairman as necessary to facilitate the conduct of the meeting, persons planning to attend should check with these references if such rescheduling would result in a major inconvenience.

If attending this meeting, please enter through the One White Flint North building, 11555 Rockville Pike, Rockville, MD. After registering with security, please contact Mr. Theron Brown (Telephone 240–888–9835) to be escorted to the meeting room.

Dated: September 26, 2012.

Antonio Dias,

Technical Advisor, Advisory Committee on Reactor Safeguards.

[FR Doc. 2012–24383 Filed 10–2–12; 8:45 am]

BILLING CODE 7590–01–P

NUCLEAR REGULATORY COMMISSION

[NRC–2011–0296]

Design, Inspection, and Testing Criteria for Air Filtration and Adsorption Units of Post-Accident Engineered-Safety-Feature Atmosphere Cleanup Systems in Light-Water-Cooled Nuclear Power Plants

AGENCY: Nuclear Regulatory Commission.

ACTION: Regulatory guide; issuance.

SUMMARY: The U.S. Nuclear Regulatory Commission (NRC or the Commission) is issuing a revision to Regulatory Guide (RG) 1.52, ''Design, Inspection, and Testing Criteria for Air Filtration and Adsorption Units of Post-accident Engineered-Safety-Feature Atmosphere Cleanup Systems in Light-Water-Cooled Nuclear Power Plants.'' This guide applies to the design, inspection, and testing of air filtration and iodine adsorption units of engineered-safety-feature (ESF) atmosphere cleanup systems in light-water-cooled nuclear power plants.

ADDRESSES: Please refer to Docket ID NRC–2011–0296 when contacting the NRC about the availability of information regarding this document. You may access information related to this document, which the NRC possesses and are publicly available, using any of the following methods:

- *Federal Rulemaking Web site:* Go to *http://www.regulations.gov* and search for Docket ID NRC–2011–0296. Address questions about NRC dockets to Carol Gallagher; telephone: 301–492–3668; email: *Carol.Gallagher@nrc.gov.*
- *NRC's Agencywide Documents Access and Management System (ADAMS):* You may access publicly available documents online in the NRC Library at *http://www.nrc.gov/reading-rm/adams.html.* To begin the search, select ''ADAMS Public Documents'' and then select ''*Begin Web-based ADAMS Search.''* For problems with ADAMS, please contact the NRC's Public Document Room (PDR) reference staff at 1–800–397–4209, 301–415–4737, or by email to *pdr.resource@nrc.gov.* The ADAMS accession number for each document referenced in this notice (if that document is available in ADAMS) is provided the first time that a document is referenced. Revision 4 of Regulatory Guide 1.52 is available in ADAMS under Accession No. ML12159A013. The regulatory analysis may be found in ADAMS under Accession No. ML12159A538.
- *NRC's PDR:* You may examine and purchase copies of public documents at the NRC's PDR, Room O1–F21, One White Flint North, 11555 Rockville Pike, Rockville, Maryland 20852.

Regulatory guides are not copyrighted, and NRC approval is not required to reproduce them.

FOR FURTHER INFORMATION CONTACT: Mekonnen Bayssie, Regulatory Guide Development Branch, Division of Engineering, Office of Nuclear Regulatory Research, U.S. Nuclear Regulatory Commission, Washington, DC 20555–0001; telephone: 301–251–7489; email: *Mekonnen.Bayssie@nrc.gov.*

SUPPLEMENTARY INFORMATION:

I. Introduction

The NRC is issuing a revision to an existing guide in the NRC's ''Regulatory Guide'' series. This series was developed to describe and make available to the public information such as methods that are acceptable to the NRC staff for implementing specific parts of the agency's regulations, techniques that the staff uses in evaluating specific problems or postulated accidents, and data that the staff needs in its review of applications for permits and licenses.

Revision 4 of RG 1.52 was issued with a temporary identification as Draft Regulatory Guide, DG–1274. This guide provides a method that the NRC considers acceptable to implement part 50 of Title 10 of the *Code of Federal Regulations* (10 CFR), ''Domestic Licensing of Production and Utilization Facilities,'' Appendix A, ''General Design Criteria for Nuclear Power Plants,'' as it applies to the design, inspection, and testing of air filtration and iodine adsorption units of ESF atmosphere cleanup systems in light-water-cooled nuclear power plants. For the purposes of this guide, ESF atmosphere cleanup systems are those systems that are credited in the licensee's current design-basis accident (DBA) analysis, as described in the safety analysis report (SAR), or those systems that the licensee has described in the SAR as ESF atmosphere cleanup systems. This guide addresses ESF atmosphere cleanup systems, including the various components and ductwork, in the postulated DBA environment.

The NRC published the previous Revision 3 of this RG in June 2001. Since this publication, the American Society of Mechanical Engineers (ASME) Committee on Nuclear Air and Gas Treatment (CONAGT) has expanded the scope of equipment covered by ASME AG–1, ''Code on Nuclear Air and Gas Treatment.'' The NRC staff had previously endorsed earlier revisions of ASME–AG–1 in RG 1.52. The revision to ASME–AG–1 consolidated select requirements from ASME–N509, ''Nuclear Power Plant Air-Cleaning Units and Components,'' ASME–N510, ''Testing of Nuclear Air-Treatment Systems,'' and other documents previously endorsed by the NRC staff in RG 1.52. In addition, CONAGT has developed and published a new standard, ASME–N511–2007, ''Inservice Testing of Nuclear Air Treatment, Heating Ventilation and Air Conditioning Systems.'' This new standard provides comprehensive test and inspection requirements and is written to complement the expanded ASME–AG–1. Revision 4 of this RG is necessary to address these changes to the referenced industry standards.

II. Further Information

DG–1274 was published in the **Federal Register** on December 30, 2011 (76 FR 82323), for a 60-day public comment period. The public comment period closed on February 25, 2012. Public comments on DG–1274 and the staff responses to the public comments are available under ADAMS Accession No. ML12159A049.

III. Backfitting and Issue Finality

Issuance of this final regulatory guide does not constitute backfitting as defined in 10 CFR 50.109 (the Backfit Rule) and is not otherwise inconsistent with the issue finality provisions in 10 CFR Part 52. As discussed in the ''Implementation'' section of this regulatory guide, the NRC has no current intention to impose this regulatory guide on holders of current operating licenses or combined licenses.

This regulatory guide may be applied to applications for operating licenses and combined licenses docketed by the NRC as of the date of issuance of the final regulatory guide, as well as future applications for operating licenses and combined licenses submitted after the issuance of the regulatory guide. Such action does not constitute backfitting as

defined in 10 CRF 50.109(a)(1) and is not otherwise inconsistent with the applicable issue finality provision in 10 CFR Part 52, inasmuch as such applicants or potential applicants are not within the scope of entities protected by the Backfit Rule or the relevant issue finality provisions in Part 52.

Dated at Rockville, Maryland, this 26th day of Sept., 2012.

For the Nuclear Regulatory Commission.

Thomas H. Boyce,

Chief, Regulatory Guide Development Branch, Division of Engineering, Office of Nuclear Regulatory Research.

[FR Doc. 2012–24395 Filed 10–2–12; 8:45 am]

BILLING CODE 7590–01–P

NUCLEAR REGULATORY COMMISSION

[NRC–2012–0227]

Regulatory Guide 5.67, Material Control and Accounting for Uranium Enrichment Facilities Authorized To Produce Special Nuclear Material of Low Strategic Significance

AGENCY: Nuclear Regulatory Commission.

ACTION: Regulatory guide; withdrawal.

SUMMARY: The U.S. Nuclear Regulatory Commission (NRC) is withdrawing Regulatory Guide (RG) 5.67, ''Material Control and Accounting for Uranium Enrichment Facilities Authorized to Produce Special Nuclear Material of Low Strategic Significance.'' The guide is being withdrawn because it is no longer needed and more extensive guidance can be found in NUREG/CR–5734, ''Recommendations to the NRC on Acceptable Format and Content for the Fundamental Nuclear Material Control (FNMC) Plan Required for Low-Enriched Uranium Facilities'' which was issued in November 1991.

ADDRESSES: Please refer to Docket ID NRC–2012–0227 when contacting the NRC about the availability of information on this document. You may access information related to this document, which the NRC possesses and is publicly available, using the following methods:

- *Federal Rulemaking Web site:* Go to *http://www.regulations.gov* and search for Docket ID NRC–2012–0227. Address questions about NRC dockets to Carol Gallagher; telephone: 301–492–3668; email: *Carol.Gallagher@nrc.gov*.
- *NRC's Agencywide Documents Access and Management System (ADAMS):* You may access publicly available documents online in the NRC Library at *http://www.nrc.gov/reading-rm/adams.html.* To begin the search, select ''*ADAMS Public Documents*'' and then select ''*Begin Web-based ADAMS Search.''* For problems with ADAMS, please contact the NRC's Public Document Room (PDR) reference staff at 1–800–397–4209, 301–415–4737, or by email to *pdr.resource@nrc.gov.* The review of the withdrawal of RG 5.67 is available in ADAMS under Accession No. ML12110A280.
- *NRC's PDR:* You may examine and purchase copies of public documents at the NRC's PDR, Room O1–F21, One White Flint North, 11555 Rockville Pike, Rockville, Maryland 20852.

FOR FURTHER INFORMATION CONTACT: Glenn Tuttle, Office of Nuclear Material Safety and Safeguards, Division of Fuel Cycle Safety and Safeguards, U.S. Nuclear Regulatory Commission, Washington, DC 20555–0001, telephone: 301–492–3129; or by email at *Glenn.Tuttle@nrc.gov*.

SUPPLEMENTARY INFORMATION:

I. Introduction

The NRC is withdrawing RG 5.67 because its guidance is no longer needed. RG 5.67 was published in December 1993 to provide guidance to the Paducah and Portsmouth Gaseous Diffusion Plants (GDPs) to develop their material control and accounting (MC&A) programs under Title 10, *Code of Federal Regulations* (10 CFR) part 76. RG 5.67 was used in conjunction with the 10 CFR part 74 MC&A guidance in NUREG/CR–5734, ''Recommendations to the NRC on Acceptable Format and Content for the Fundamental Nuclear Material Control (FNMC) Plan Required for Low-Enriched Uranium Facilities'' to develop the FNMC plans for the two GDPs in the 1990s.

The NRC is withdrawing this regulatory guide because NUREG/CR–5734 is more comprehensive than RG 5.67 and is applicable to the Paducah GDP and other uranium enrichment facilities that have been licensed under 10 CFR part 70. Topics that are covered only briefly in RG 5.67 are covered in detail in NUREG/CR–5734. Therefore, the guidance in RG 5.67 is not needed.

II. Further Information

As discussed above, the guidance provided in RG 5.67 is no longer necessary and is addressed in more detail by NUREG/CR–5734. Regulatory guides may be withdrawn when their guidance no longer provides useful information.

Withdrawal of a regulatory guide means that the NRC staff no longer approves, as a generic matter, the guidance in the withdrawn regulatory guide. Therefore, a certificate holder or licensee who wishes to follow the guidance bears the responsibility of demonstrating, in the appropriate circumstance, that the guidance in the withdrawn regulatory guide is applicable to the certificate holder or licensee's specific situation. Current certificate holders or licensees who have included RG 5.67 in their licensing basis may continue to use it, and withdrawal of the guide does not affect their existing licensing documents or agreements. Changes to existing licenses (or 10 CFR part 76 certificates) must be accomplished in accordance with applicable NRC requirements.

Dated at Rockville, Maryland, this 24th day of September, 2012.

For the Nuclear Regulatory Commission.

Thomas H. Boyce,

Branch Chief, Regulatory Guide Development Branch, Division of Engineering, Office of Nuclear Regulatory Research.

[FR Doc. 2012–24282 Filed 10–2–12; 8:45 am]

BILLING CODE 7590–01–P

NUCLEAR REGULATORY COMMISSION

[Docket Nos. 50–029 and 72–31; NRC–2012–0229]

Yankee Atomic Electric Company; Yankee Rowe Independent Spent Fuel Storage Installation, Staff Evaluation; Exemption

1.0 Background

Yankee Atomic Electric Company (YAEC, the licensee) is the holder of Facility Operating License No. DPR–3 which authorizes possession of nuclear fuel under part 50 of Title 10 of the *Code of Federal Regulations* (10 CFR). The license provides, among other things, that the facility is subject to all rules, regulations, and orders of the U.S. Nuclear Regulatory Commission (NRC or the Commission) now or hereafter in effect. Per 10 CFR part 72, Subpart K, a general license is issued for the storage of spent fuel in an Independent Spent Fuel Storage Installation (ISFSI) to persons authorized to possess or operate nuclear power reactors under 10 CFR part 50. Thus, YAEC also holds a 10 CFR part 72 general license for storage of spent fuel and greater than Class C waste at the Yankee Rowe ISFSI in Rowe, Massachusetts.

The Yankee Nuclear Power Station (YNPS) was a Pressurized Water Reactor in Rowe, Massachusetts, operated by the Yankee Atomic Electric Company (YAEC). By February 26, 1992, the reactor core was removed, and YNPS

had permanently shut down. On February 27, 1992, YAEC notified the NRC that power generating operations at YNPS had permanently ceased. On August 5, 1992, the NRC amended the license for YNPS to ''Possession Only.'' Currently, all remaining fuel on-site at the facility is stored in dry cask storage at a stand-alone ISFSI.

The Power Reactor Security Rule, which applies to all 10 CFR part 50 licensees, was revised on March 27, 2009, with compliance required by March 31, 2010 (74 FR 13926). The NRC held a webinar on July 20, 2010, to provide clarification on the applicability of the power reactor security regulations to 10 CFR part 50 licensees undergoing decommissioning or 10 CFR part 50 licensees that have only a general licensed ISFSI. On August 2, 2010, the NRC issued a letter to YAEC clarifying the applicability of the revised power reactor security regulations to a part 50 licensee undergoing decommissioning or a part 50 licensee that has only a general licensed ISFSI (Agencywide Documents Access and Management System (ADAMS) Accession No. ML102160023). In the August 2, 2010, letter, the NRC noted that there are currently no security or health and safety gaps at these facilities that may not be in compliance with the current 10 CFR 73.55 requirements because the Security Plans at these facilities meet the baseline requirements of the previous version of 10 CFR 73.55 and also meet the requirements of subsequent NRC security orders. The NRC requested a response be submitted within 120 days of receipt of the August 2, 2010, letter.

By letter dated November 30, 2010 (ADAMS Accession No. ML103550172), YAEC responded to the August 2, 2010, letter. In its response, YAEC requested exemption from certain regulations in 10 CFR 73.55, ''Requirements for Physical Protection of Licensed Activities in Nuclear Power Reactors Against Radiological Sabotage,'' which it considered either not applicable or caused an undue burden to a stand-alone ISFSI. As part of its response, YAEC submitted a matrix which described how YAEC either complied with the new rule and applicable orders or needed an exemption. In addition, YAEC clarified that their intent in submitting the exemption request was to maintain its NRC-approved Physical Security Plan (PSP). In addition, YAEC noted that the statement of consideration for the Power Reactor Security Rule states that the Commission did not intend to make changes to the substantive requirements of 10 CFR 72.212 and that the Commission has initiated a separate rulemaking to revise the ISFSI security requirements (74 FR 13958).

2.0 Discussion

Pursuant to 10 CFR 73.5, ''Specific Exemptions,'' the Commission may, upon application by any interested person or upon its own initiative, grant such exemptions from the requirements in 10 CFR part 73 as it determines are authorized by law and will not endanger life or property or the common defense and security and are otherwise in the public interest. The NRC evaluated the exemption requests submitted by YAEC in its November 30, 2010, letter. After evaluating the exemption requests, the NRC staff believes that YAEC should be granted exemptions from the following requirements: 10 CFR 73.55(e)(10)(ii) and 10 CFR 73.55(g)(8)(iv). Section 73.55(e)(10)(ii) sets forth requirements for restricting access by waterborne vehicles and 10 CFR 73.55(g)(8)(iv) sets forth access authorization requirements. The remaining exemptions requested were determined either not to be applicable to the facility or are being met by the licensee's current PSP; therefore, these exemptions were denied. Additional information regarding the NRC (staff) evaluation is documented in a Safety Evaluation Report that contains Sensitive Unclassified Non-Safeguards Information and is being withheld from public inspection in accordance with 10 CFR 2.390.

In considering these exemption requests, the staff reviewed the current Yankee Nuclear Power Station Physical Security Plan (YNPS PSP) (Revision 18), dated November 28, 2006; and the NRC letter dated March 13, 2002, and its attachment, Amendment 156, which granted YNPS exemptions from certain requirements of the previous 10 CFR part 73. The NRC staff also reviewed the revised Power Reactor Security Rule, 10 CFR 73.55, which became effective on May 26, 2009 (74 FR 13926), to identify substantive changes affecting previously approved exemptions. In addition, the staff reviewed a 2009 inspection report prepared after conducting inspections of the licensee's facility, procedures, and PSP for compliance with all applicable regulations and NRC Orders. Based upon its review, the staff determined that current barriers and actions implemented under the Yankee Rowe ISFSI PSP meet the intent of the regulations being exempted, and that granting the requested exemptions will not result in a violation of the Atomic Energy Act of 1954, as amended, or the Commission's regulations. Therefore, the exemptions are authorized by law.

The purpose of the regulations in 10 CFR 73.55 is to establish and maintain a physical protection system designed to protect against radiological sabotage. The function of 10 CFR 73.55(e)(10)(ii) is to restrict waterborne vehicle access and require performance of periodic surveillance of waterway approaches to ISFSIs. However, there are no pathways which allow waterborne vehicles to gain direct access to the ISFSI. Furthermore, YAEC employs site specific barriers as part of its NRC-approved PSP which are appropriate for the reduced radiological risk associated with a stand-alone ISFSI. The purpose of the regulations in 10 CFR 73.55(g)(8)(iv) is to ensure personnel trained as escorts be knowledgeable of where visitors would be working within the protected area and that visitors within the protected area will be escorted. The NRC staff determined that the NRC approved measures currently employed by YAEC in its PSP are appropriate for the reduced radiological risk to the public from the ISFSI and are consistent with the general performance standards in 10 CFR 73.55(b). Therefore, the NRC staff concludes that the exemptions do not pose an increased risk to public health and safety and are not inimical to the common defense and security. Given the above considerations, this exemption will not endanger life or property or the common defense and security.

As discussed above, the purpose of 10 CFR 73.55 is to protect against radiological sabotage. Granting YAEC an exemption from the requirements of 10 CFR 73.55(e)(10)(ii) and 10 CFR 73.55(g)(8)(iv) would not decrease the level of security currently in place at the Yankee Rowe ISFSI. In addition, granting exemptions to these regulations will not result in increased radiological risk to the public from operation of this general licensed, stand-alone ISFSI. Accordingly, the NRC staff has determined that, pursuant to 10 CFR 73.5, these exemptions are authorized by law and are otherwise in the public interest.

Granting exemptions from the requirements of 10 CFR 73.55(e)(10)(ii) and 73.55(g)(8)(iv) involves safeguards plans. A categorical exclusion for exemptions involving safeguard plans is allowed under 10 CFR 51.22(c)(25)(vi)(F) provided that the criteria in 10 CFR 51.22(c)(25)(i)–(v) are also satisfied. In its review of the exemption request, the NRC determined that, pursuant to 10 CFR 51.22(c)(25): (i) Granting the exemptions neither involves a significant reduction in a margin of safety nor creates a new or different kind of accident from any

accident previously evaluated, and thus no significant hazards considerations because there is no significant increase in either the probability or consequences of an accident previously evaluated; (ii) granting the exemptions would not produce a significant change in either the types or amounts of any effluents that may be released offsite because the requested exemptions neither change the effluents nor produce additional avenues of effluent release; (iii) granting the exemptions would not result in a significant increase in either occupational radiation exposure or public radiation exposure because the requested exemptions neither introduce new radiological hazards nor increase existing radiological hazards; (iv) granting the exemptions would not result in a significant construction impact because there are no construction activities associated with the requested exemptions; and; (v) granting the exemptions would not result in a significant increase in the potential for or consequences from radiological accidents because the exemptions neither reduce the level of security in place at the Yankee Rowe ISFSI nor create new accident precursors. Accordingly, this exemption meets the criteria for a categorical exclusion in 10 CFR 51.22(c)(25)(vi)(F).

3.0 Conclusion

Accordingly, the Commission has determined that, pursuant to 10 CFR 73.5, the exemptions are authorized by law, will not endanger life or property or the common defense and security, and are otherwise in the public interest. Therefore, the Commission hereby grants YAEC an exemption from the 10 CFR 73.55(e)(10)(ii) requirement to restrict waterborne vehicle access and perform periodic surveillance of waterway approaches as well as the 10 CFR 73.55(g)(8)(iv) requirement for escort personnel to be generally knowledgeable of visitor activities. In addition, YAEC shall continue to follow the NRC approved ISFSI PSP and applicable NRC orders. As discussed in the preceding paragraph, the Commission has determined that this exemption meets the criteria for categorical exclusion set forth in 10 CFR 51.22(c)(25)(vi)(F). Therefore, pursuant to 10 CFR 51.22(b), no environmental impact statement or environmental assessment need be prepared in connection with the granting of these exemptions. These exemptions are effective upon issuance.

Dated at Rockville, Maryland, this 21st day of September, 2012.

For the Nuclear Regulatory Commission.

Douglas W. Weaver,

Deputy Director, Division of Spent Fuel Storage and Transportation, Office of Nuclear Material Safety and Safeguards.

[FR Doc. 2012–24281 Filed 10–2–12; 8:45 am]

BILLING CODE 7590–01–P

SECURITIES AND EXCHANGE COMMISSION

Submission for OMB Review; Comment Request

Upon Written Request Copies Available From: Securities and Exchange Commission, Office of Investor Education and Advocacy, Washington, DC 20549–0213.

Extension: Form 11–K.
OMB Control No. 3235–0082, SEC File No. 270–101.

Notice is hereby given that, pursuant to the Paperwork Reduction Act of 1995 (44 U.S.C. 3501 *et seq.*), the Securities and Exchange Commission (''Commission'') has submitted to the Office of Management and Budget a request for extension of the previously approved collection of information discussed below.

Form 11–K (17 CFR 249.311) is the annual report designed for use by employee stock purchase, savings and similar plans to comply with the reporting requirements under Section 15(d) of the Securities and Exchange Act of 1934 (the ''Exchange Act'') (15 U.S.C. 78o(d)). Section 15(d) establishes a periodic reporting obligation for every issuer of a class of securities registered under the Securities Act of 1933 (the ''Securities Act'')(15 U.S.C. 77a *et seq.*). Form 11–K provides employees of an issuer with financial information so that they can assess the performance of the investment vehicle or stock plan. Form 11–K is filed on occasion. The information collected must be filed with the Commission and is publicly available. Form 11–K takes approximately 30 burden hours per response and is filed by 2,000 respondents for total of 60,000 burden hours.

An agency may not conduct or sponsor, and a person is not required to respond to, a collection of information unless it displays a currently valid control number.

The public may view the background documentation for this information collection at the following Web site, *www.reginfo.gov.* Comments should be directed to: (i) Desk Officer for the Securities and Exchange Commission, Office of Information and Regulatory Affairs, Office of Management and Budget, Room 10102, New Executive Office Building, Washington, DC 20503, or by sending an email to: *Shagufta_Ahmed@omb.eop.gov;* and (ii) Thomas Bayer, Director/Chief Information Officer, Securities and Exchange Commission, c/o Remi Pavlik-Simon, 6432 General Green Way, Alexandria, VA 22312 or send an email to: *PRA_Mailbox@sec.gov.* Comments must be submitted to OMB within 30 days of this notice.

Dated: September 28, 2012.

Kevin M. O'Neill,

Deputy Secretary.

[FR Doc. 2012–24340 Filed 10–2–12; 8:45 am]

BILLING CODE 8011–01–P

SECURITIES AND EXCHANGE COMMISSION

[Investment Company Act Release No. 30222; 812–13820]

PowerShares Exchange-Traded Fund Trust, et al.; Notice of Application

September 26, 2012.

AGENCY: Securities and Exchange Commission (''Commission'').

ACTION: Notice of an application for an order under section 12(d)(1)(J) of the Investment Company Act of 1940 (the ''Act'') for exemptions from sections 12(d)(1)(A), (B), and (C) of the Act and under sections 6(c) and 17(b) of the Act for an exemption from section 17(a) of the Act.

SUMMARY OF THE APPLICATION: Applicants request an order that would permit certain registered open-end management investment companies that operate as ''funds of funds'' to acquire shares of certain registered open-end and closed-end management investment companies and unit investment trusts that are within and outside the same group of investment companies as the acquiring investment companies.

APPLICANTS: PowerShares Exchange-Traded Fund Trust, PowerShares Exchange-Traded Fund Trust II, PowerShares Actively Managed Exchange-Traded Fund Trust (each, a ''Trust'') and Invesco PowerShares Capital Management LLC (the ''Adviser'').

FILING DATES: The application was filed on September 3, 2010, and amended on December 22, 2010, October 13, 2011, April 23, 2012, September 5, 2012, and September 20, 2012.

HEARING OR NOTIFICATION OF HEARING: An order granting the application will be issued unless the Commission orders

a hearing. Interested persons may request a hearing by writing to the Commission's Secretary and serving applicants with a copy of the request, personally or by mail. Hearing requests should be received by the Commission by 5:30 p.m. on October 22, 2012, and should be accompanied by proof of service on applicants, in the form of an affidavit or, for lawyers, a certificate of service. Hearing requests should state the nature of the writer's interest, the reason for the request, and the issues contested. Persons who wish to be notified of a hearing may request notification by writing to the Commission's Secretary.

ADDRESSES: Elizabeth M. Murphy, Secretary, U.S. Securities and Exchange Commission, 100 F Street NE., Washington, DC 20549–1090. Applicants, 301 West Roosevelt Road, Wheaton, Illinois 60187.

FOR FURTHER INFORMATION CONTACT: Jill Ehrlich, Senior Counsel, at (202) 551–6819, or David P. Bartels, Branch Chief, at (202) 551–6821 (Division of Investment Management, Office of Investment Company Regulation).

SUPPLEMENTARY INFORMATION: The following is a summary of the application. The complete application may be obtained via the Commission's Web site by searching for the file number, or for an applicant using the Company name box, at *http://www.sec.gov/search/search.htm* or by calling (202) 551–8090.

Applicants' Representations

1. Each Trust is organized as a Massachusetts business trust or Delaware statutory trust and is registered as an open-end management investment company under the Act.[1] Each series of a Trust will pursue distinct investment objectives and strategies. The Adviser is a Delaware limited liability company registered under the Investment Advisers Act of 1940. The Adviser or an entity controlling, controlled by or under common control with the Adviser serves as the investment adviser for each of the Funds.[2]

2. Applicants request relief to the extent necessary to permit: (a) A Fund (each, a ''Fund of Funds,'' and collectively, the ''Funds of Funds'') to acquire shares of registered management investment companies, including open-end investment companies and closed-end investment companies (''Unaffiliated OEFs'' and ''Unaffiliated CEFs,'' respectively, and, together, the ''Unaffiliated Investment Companies''), and unit investment trusts (''UITs'') (the ''Unaffiliated Trusts,'' and together with the Unaffiliated Investment Companies, the ''Unaffiliated Funds''), in each case, that are not part of the same ''group of investment companies'' as the Funds of Funds;[3] (b) the Unaffiliated Funds, their principal underwriters and any broker or dealer registered under the Securities Exchange Act of 1934 (''Broker'') to sell shares of such Unaffiliated Funds to the Funds of Funds; (c) the Funds of Funds to acquire shares of other registered investment companies, including open-end investment companies, closed-end investment companies and UITs in the same group of investment companies (the ''Affiliated Funds,'' together with the Unaffiliated Funds, the ''Underlying Funds'');[4] and (d) the Affiliated Funds, their principal underwriters and any Broker to sell shares of such Affiliated Funds to the Funds of Funds. Applicants also request an order under sections 6(c) and 17(b) of the Act to exempt applicants from section 17(a) to the extent necessary to permit Underlying Funds to sell their shares to Funds of Funds and redeem their shares from Funds of Funds.

Applicants' Legal Analysis

A. Section 12(d)(1)

1. Section 12(d)(1)(A) of the Act, in relevant part, prohibits a registered investment company from acquiring shares of an investment company if the securities represent more than 3% of the total outstanding voting stock of the acquired company, more than 5% of the total assets of the acquiring company, or, together with the securities of any other investment companies, more than 10% of the total assets of the acquiring company. Section 12(d)(1)(B) of the Act prohibits a registered open-end investment company, its principal underwriter, and any Broker from selling the investment company's shares to another investment company if the sale will cause the acquiring company to own more than 3% of the acquired company's voting stock, or if the sale will cause more than 10% of the acquired company's voting stock to be owned by investment companies generally. Section 12(d)(1)(C) prohibits an investment company from acquiring any security issued by a registered closed-end investment company if such acquisition would result in the acquiring company, any other investment companies having the same investment adviser, and companies controlled by such investment companies, collectively, owning more than 10% of the outstanding voting stock of the registered closed-end investment company.

2. Section 12(d)(1)(J) of the Act provides that the Commission may exempt any person, security, or transaction, or any class or classes of persons, securities or transactions, from any provision of section 12(d)(1) if the exemption is consistent with the public interest and the protection of investors. Applicants request an exemption under section 12(d)(1)(J) of the Act from the limitations of sections 12(d)(1)(A), (B) and (C) to the extent necessary to permit: (i) the Funds of Funds to acquire shares of Underlying Funds in excess of the limits set forth in section 12(d)(1)(A) and (C) of the Act; and (ii) the Underlying Funds, their principal underwriters and any Broker to sell shares of the Underlying Funds to the Funds of Funds in excess of the limits set forth in section 12(d)(1)(B) of the Act.

3. Applicants state that the proposed arrangement will not give rise to the policy concerns underlying sections 12(d)(1)(A), (B), and (C), which include concerns about undue influence by a fund of funds over underlying funds, excessive layering of fees, and overly complex fund structures. Accordingly, applicants believe that the requested exemption is consistent with the public interest and the protection of investors.

4. Applicants submit that the proposed structure will not result in the exercise of undue influence by a Fund

[1] Applicants request that the order extend to any future series of a Trust, and any other existing or future registered open-end management investment companies and any series thereof that are part of the same group of investment companies, as defined in section 12(d)(1)(G)(ii) of the Act, as the Trust and are, or may in the future be, advised by the Adviser or any other investment adviser controlling, controlled by, or under common control with the Adviser (together with the existing series of the Trust, the ''Funds''). All entities that currently intend to rely on the requested order are named as applicants. Any other entity that relies on the order in the future will comply with the terms and conditions set forth in the application.

[2] All references to the term ''Adviser'' include any entity that results from reorganization into another jurisdiction or a change in the type of business organization.

[3] For purposes of the application, the same ''group of investment companies'' means any two or more registered investment companies, including closed-end investment companies, that hold themselves out to investors as related companies for purposes of investment and investor services.

[4] Certain of the Unaffiliated Funds may be registered under the Act as either UITs or open-end management investment companies and have obtained exemptions from the Commission necessary to permit their shares to be listed and traded on a national securities exchange at negotiated prices (''ETFs''). Underlying Funds that are registered closed-end management investment companies are referred to herein as ''Underlying CEFs,'' and Underlying Funds that are ETFs are ''Underlying ETFs.'' Underlying Funds that are registered open-end management investment companies and not ETFs are ''Underlying OEFs.''

of Funds or its affiliated persons over the Underlying Funds. Applicants assert that the concern about undue influence does not arise in connection with a Fund of Funds' investment in the Affiliated Funds because they are part of the same group of investment companies. To limit the control a Fund of Funds or Fund of Funds Affiliate [5] may have over an Unaffiliated Fund, applicants propose a condition prohibiting the Adviser and any person controlling, controlled by or under common control with the Adviser, and any investment company and any issuer that would be an investment company but for section 3(c)(1) or section 3(c)(7) of the Act advised or sponsored by the Adviser or any person controlling, controlled by or under common control with the Adviser (collectively, the ''Group'') from controlling (individually or in the aggregate) an Unaffiliated Fund within the meaning of section 2(a)(9) of the Act. The same prohibition would apply to any other investment adviser within the meaning of section 2(a)(20)(B) of the Act to a Fund of Funds (''Sub-Adviser'') and any person controlling, controlled by or under common control with the Sub-Adviser, and any investment company or issuer that would be an investment company but for section 3(c)(1) or 3(c)(7) of the Act (or portion of such investment company or issuer) advised or sponsored by the Sub-Adviser or any person controlling, controlled by or under common control with the Sub-Adviser (collectively, the ''Sub-Adviser Group'').

5. With respect to Underlying CEFs, applicants submit that one significant difference from Underlying OEFs is that, whereas Underlying OEFs may be unduly influenced by the threat of large-scale redemptions, Underlying CEFs cannot be so influenced because they do not issue redeemable securities and, therefore, are not subject to large-scale redemptions. On the other hand, applicants state that Unaffiliated CEFs may be unduly influenced by a holder's ability to vote a large block of stock. To address this concern, applicants submit that, with respect to a Fund of Fund's investment in an Unaffiliated CEF, (i) each member of the Group or Sub-Adviser Group that is an investment company or an issuer that would be an investment company but for section 3(c)(1) or 3(c)(7) of the Act will vote its shares of the Unaffiliated CEF in the manner prescribed by section 12(d)(1)(E) of the Act and (ii) each other member of the Group or Sub-Adviser Group will vote its shares of the Unaffiliated CEF in the same proportion as the vote of all other holders of the same type of such Unaffiliated CEF's shares. Applicants state that, in this way, an Unaffiliated CEF will be protected from undue influence by a Fund of Funds through the voting of the Unaffiliated CEF's shares.

6. Applicants propose other conditions to limit the potential for undue influence over the Unaffiliated Underlying Funds, including that no Fund of Funds or Fund of Funds Affiliate (except to the extent it is acting in its capacity as an investment adviser to an Unaffiliated Investment Company or sponsor to an Unaffiliated Trust) will cause an Unaffiliated Fund to purchase a security in an offering of securities during the existence of any underwriting or selling syndicate of which a principal underwriter is an Underwriting Affiliate (''Affiliated Underwriting'').[6]

7. To further ensure that an Unaffiliated Investment Company understands the implications of a Fund of Funds' investment under the requested relief, prior to its investment in the shares of an Unaffiliated Investment Company in excess of the limit of section 12(d)(1)(A)(i) of the Act, a Fund of Funds and the Unaffiliated Investment Company will execute an agreement stating, without limitation, that their boards of directors or trustees (each, a ''Board'') and their investment advisers understand the terms and conditions of the order and agree to fulfill their responsibilities under the order (the ''Participation Agreement''). Applicants note that an Unaffiliated Fund (including an Unaffiliated ETF or an Unaffiliated CEF) would also retain its right to reject any initial investment by a Fund of Funds in excess of the limits in section 12(d)(1)(A)(i) of the Act by declining to execute the Participation Agreement with the Fund of Funds. In addition, an Unaffiliated Fund (other than an Unaffiliated ETF or an Unaffiliated CEF whose shares are purchased by a Fund of Funds in the secondary market) will retain its right at all times to reject any investment by a Fund of Funds. Finally, subject solely to the giving of notice to a Fund of Funds and the passage of a reasonable notice period, an Unaffiliated Fund (including an Unaffiliated CEF) could terminate a Participation Agreement with the Fund of Funds.

8. Applicants state that they do not believe that the proposed arrangement will result in excessive layering of fees. The Board of each Fund of Funds, including a majority of the trustees who are not ''interested persons'' within the meaning of section 2(a)(19) of the Act (the ''Independent Trustees''), will find that the management or advisory fees charged under a Fund of Funds' advisory contract(s) are based on services provided that are in addition to, rather than duplicative of, services provided pursuant to any Underlying Fund's advisory contract. In addition, the Adviser will waive fees otherwise payable to it by a Fund of Funds in an amount at least equal to any compensation (including fees received pursuant to any plan adopted by an Unaffiliated Investment Company under rule 12b–1 under the Act) received from an Unaffiliated Fund by the Adviser, or an affiliated person of the Adviser, other than any advisory fees paid to the Adviser or an affiliated person of the Adviser by the Unaffiliated Investment Company in connection with the investment by the Fund of Funds in the Unaffiliated Fund.

9. Applicants further state that any sales charges and/or service fees charged with respect to shares of a Fund of Funds will not exceed the limits applicable to funds of funds set forth in Rule 2830 of the Conduct Rules of the NASD.[7]

10. Applicants submit that the proposed arrangement will not create an overly complex fund structure. Applicants note that no Underlying Fund will acquire securities of any other investment company or company relying on section 3(c)(1) or 3(c)(7) of the Act in excess of the limits contained in section 12(d)(1)(A) of the Act, except in certain circumstances identified in condition 12 below.

B. Section 17(a)

1. Section 17(a) of the Act generally prohibits sales or purchases of securities between a registered investment company and any affiliated person of the company. Section 2(a)(3) of the Act

[5] A ''Fund of Funds Affiliate'' is the Adviser, any Sub-Adviser, promoter or principal underwriter of a Fund of Funds, as well as any person controlling, controlled by or under common control with any of those entities. An ''Unaffiliated Fund Affiliate'' is an investment adviser, sponsor, promoter or principal underwriter of an Unaffiliated Fund or any person controlling, controlled by, or under common control with any of those entities.

[6] An ''Underwriting Affiliate'' is a principal underwriter in any underwriting or selling syndicate that is an officer, director, trustee, advisory board member, investment adviser, sub-adviser or employee of the Fund of Funds, or a person of which any such officer, director, trustee, investment adviser, sub-adviser, member of an advisory board or employee is an affiliated person. An Underwriting Affiliate does not include any person whose relationship to an Unaffiliated Fund is covered by section 10(f) of the Act.

[7] Any references to NASD Conduct Rule 2830 include any successor or replacement FINRA rule to NASD Conduct Rule 2830.

defines an ''affiliated person'' of another person to include (a) Any person directly or indirectly owning, controlling, or holding with power to vote, 5% or more of the outstanding voting securities of the other person; (b) any person 5% or more of whose outstanding voting securities are directly or indirectly owned, controlled, or held with power to vote by the other person; and (c) any person directly or indirectly controlling, controlled by, or under common control with the other person.

2. Applicants state that a Fund of Funds and an Affiliated Fund may be deemed to be under common control and therefore affiliated persons of one another. Applicants also state that a Fund of Funds and an Underlying Fund may also be deemed to be affiliated persons of one another if a Fund of Funds owned 5% or more of one or more of such Underlying Funds' outstanding voting securities. Applicants state that, for example, the sale by an Underlying OEF to the Fund of Funds and the redemption by the Underlying OEF of the Fund of Funds may be deemed to violate section 17(a).[8] Similarly, applicants state that, the participation by the Fund of Funds in a follow-on offering of an Underlying CEF may be deemed to violate section 17(a).[9]

3. Section 17(b) of the Act authorizes the Commission to grant an order permitting a transaction otherwise prohibited by section 17(a) if it finds that (i) The terms of the proposed transaction are fair and reasonable and do not involve overreaching on the part of any person concerned; (ii) the proposed transaction is consistent with the policies of each registered investment company concerned; and (iii) the proposed transaction is consistent with the general purposes of the Act. Section 6(c) of the Act permits the Commission to exempt any person or transactions from any provision of the Act if such exemption is necessary or appropriate in the public interest and consistent with the protection of investors and the purposes fairly intended by the policy and provisions of the Act.

4. Applicants submit that the proposed transactions satisfy the standards for relief under sections 17(b) and 6(c) of the Act. Applicants state that the terms of the transactions are reasonable and fair and do not involve overreaching. Applicants state that the terms upon which an Underlying Fund will sell its shares to or purchase its shares from a Fund of Funds will be in accordance with the rules and regulations under the Act.[10] Applicants also state that the proposed transactions will be consistent with the policies of each Fund of Funds and Underlying Fund and with the general purposes of the Act.

Applicants' Conditions

Applicants agree that the order granting the requested relief shall be subject to the following conditions:

1. The members of the Group will not control (individually or in the aggregate) an Unaffiliated Fund within the meaning of section 2(a)(9) of the Act. The members of a Sub-Adviser Group will not control (individually or in the aggregate) an Unaffiliated Fund within the meaning of section 2(a)(9) of the Act. With respect to a Fund's investment in an Unaffiliated CEF, (i) each member of the Group or Sub-Adviser Group that is an investment company or an issuer that would be an investment company but for section 3(c)(1) or 3(c)(7) of the Act will vote its shares of the Unaffiliated CEF in the manner prescribed by section 12(d)(1)(E) of the Act and (ii) each other member of the Group or Sub-Adviser Group will vote its shares of the Unaffiliated CEF in the same proportion as the vote of all other holders of the same type of Unaffiliated CEF's shares. If, as a result of a decrease in the outstanding voting securities of any other Unaffiliated Fund, the Group or a Sub-Adviser Group, each in the aggregate, becomes a holder of more than 25 percent of the outstanding voting securities of such Unaffiliated Fund, then the Group or the Sub-Adviser Group will vote its shares of the Unaffiliated Fund in the same proportion as the vote of all other holders of the Unaffiliated Fund's shares. This condition will not apply to a Sub-Adviser Group with respect to an Unaffiliated Fund for which the Sub-Adviser or a person controlling, controlled by, or under common control with the Sub-Adviser acts as the investment adviser within the meaning of section 2(a)(20)(A) of the Act (in the case of an Unaffiliated Investment Company) or as the sponsor (in the case of an Unaffiliated Trust).

2. No Fund of Funds or Fund of Funds Affiliate will cause any existing or potential investment by the Fund of Funds in an Unaffiliated Fund to influence the terms of any services or transactions between the Fund of Funds or a Fund of Funds Affiliate and the Unaffiliated Fund or an Unaffiliated Fund Affiliate.

3. The Board of each Fund of Funds, including a majority of the Independent Trustees, will adopt procedures reasonably designed to ensure that its Adviser and any Sub-Adviser to the Fund of Funds are conducting the investment program of the Fund of Funds without taking into account any consideration received by the Fund of Funds or Fund of Funds Affiliate from an Unaffiliated Fund or an Unaffiliated Fund Affiliate in connection with any services or transactions.

4. Once an investment by a Fund of Funds in the securities of an Unaffiliated Investment Company exceeds the limit of section 12(d)(1)(A)(i) of the Act, the Board of the Unaffiliated Investment Company, including a majority of the Independent Trustees, will determine that any consideration paid by the Unaffiliated Investment Company to a Fund of Funds or a Fund of Funds Affiliate in connection with any services or transactions: (a) Is fair and reasonable in relation to the nature and quality of the services and benefits received by the Unaffiliated Investment Company; (b) is within the range of consideration that the Unaffiliated Investment Company would be required to pay to another unaffiliated entity in connection with the same services or transactions; and (c) does not involve overreaching on the part of any person concerned. This condition does not apply with respect to any services or transactions between an Unaffiliated Investment Company and its investment adviser(s), or any person controlling, controlled by, or under common control with such investment adviser(s).

[8] Applicants acknowledge that receipt of any compensation by (a) an affiliated person of a Fund of Funds, or an affiliated person of such person, for the purchase by the Fund of Funds of shares of an Underlying Fund or (b) an affiliated person of an Underlying Fund, or an affiliated person of such person, for the sale by the Underlying Fund of its shares to a Fund of Funds may be prohibited by section 17(e)(1) of the Act. The Participation Agreement also will include this acknowledgement.

[9] Applicants assert that they would not require relief from section 17(a) for secondary market transactions in the shares of any Underlying ETF or Underlying CEF, regardless of whether the Fund of Funds and Underlying Fund may be deemed to be affiliated persons.

[10] Applicants note that a Fund of Funds generally would purchase and sell shares of an Underlying ETF or an Underlying CEF through secondary market transactions rather than through principal transactions with such Underlying Fund. Applicants nevertheless request relief from sections 17(a)(1) and (2) to permit each Fund of Funds that is an affiliated person, or an affiliated person of an affiliated person, as defined in section 2(a)(3) of the Act, of an Underlying ETF or Underlying CEF to purchase and redeem shares from such Underlying ETF and to purchase shares from such Underlying CEF. Applicants are not seeking relief from section 17(a) for, and the requested relief will not apply to, transactions where an Underlying ETF or Underlying CEF could be deemed to be an affiliated person, or an affiliated person of an affiliated person, of a Fund of Funds because an investment adviser to the Underlying Fund is also an investment adviser to the Fund of Funds.

5. No Fund of Funds or Fund of Funds Affiliate (except to the extent it is acting in its capacity as an investment adviser to an Unaffiliated Investment Company or sponsor to an Unaffiliated Trust) will cause an Unaffiliated Fund to purchase a security in any Affiliated Underwriting.

6. The Board of an Unaffiliated Investment Company, including a majority of the Independent Trustees, will adopt procedures reasonably designed to monitor any purchases of securities by the Unaffiliated Investment Company in an Affiliated Underwriting once an investment by a Fund of Funds in the securities of the Unaffiliated Investment Company exceeds the limit of section 12(d)(1)(A)(i) of the Act, including any purchases made directly from an Underwriting Affiliate. The Board of the Unaffiliated Investment Company will review these purchases periodically, but no less frequently than annually, to determine whether the purchases were influenced by the investment by the Fund of Funds in the Unaffiliated Investment Company. The Board of the Unaffiliated Investment Company will consider, among other things: (a) Whether the purchases were consistent with the investment objectives and policies of the Unaffiliated Investment Company; (b) how the performance of securities purchased in an Affiliated Underwriting compares to the performance of comparable securities purchased during a comparable period of time in underwritings other than Affiliated Underwritings or to a benchmark such as a comparable market index; and (c) whether the amount of securities purchased by the Unaffiliated Investment Company in Affiliated Underwritings and the amount purchased directly from an Underwriting Affiliate have changed significantly from prior years. The Board of the Unaffiliated Investment Company will take any appropriate actions based on its review, including, if appropriate, the institution of procedures designed to ensure that purchases of securities in Affiliated Underwritings are in the best interest of shareholders.

7. Each Unaffiliated Investment Company will maintain and preserve permanently in an easily accessible place a written copy of the procedures described in the preceding condition, and any modifications to such procedures, and will maintain and preserve for a period of not less than six years from the end of the fiscal year in which any purchase from an Affiliated Underwriting occurred, the first two years in an easily accessible place, a written record of each purchase of securities in an Affiliated Underwriting once an investment by a Fund of Funds in the securities of an Unaffiliated Investment Company exceeds the limit of section 12(d)(1)(A)(i) of the Act, setting forth (1) The party from whom the securities were acquired, (2) the identity of the underwriting syndicate's members, (3) the terms of the purchase, and (4) the information or materials upon which the determinations of the Board of the Unaffiliated Investment Company were made.

8. Prior to its investment in shares of an Unaffiliated Investment Company in excess of the limit set forth in section 12(d)(1)(A)(i) of the Act, the Fund of Funds and the Unaffiliated Investment Company will execute a Participation Agreement stating, without limitation, that their Boards and their investment advisers understand the terms and conditions of the order and agree to fulfill their responsibilities under the order. At the time of its investment in shares of an Unaffiliated Investment Company in excess of the limit set forth in section 12(d)(1)(A)(i), a Fund of Funds will notify the Unaffiliated Investment Company of the investment. At such time, the Fund of Funds will also transmit to the Unaffiliated Investment Company a list of the names of each Fund of Funds Affiliate and Underwriting Affiliate. The Fund of Funds will notify the Unaffiliated Investment Company of any changes to the list as soon as reasonably practicable after a change occurs. The Unaffiliated Investment Company and the Fund of Funds will maintain and preserve a copy of the order, the Participation Agreement, and the list with any updated information for the duration of the investment and for a period of not less than six years thereafter, the first two years in an easily accessible place.

9. Before approving any advisory contract under section 15 of the Act, the Board of each Fund of Funds, including a majority of the Independent Trustees, shall find that the advisory fees charged under the advisory contract are based on services provided that are in addition to, rather than duplicative of, services provided under the advisory contract(s) of any Underlying Fund in which the Fund of Funds may invest. Such finding, and the basis upon which the finding was made, will be recorded fully in the minute books of the appropriate Fund of Funds.

10. The Adviser will waive fees otherwise payable to it by a Fund of Funds in an amount at least equal to any compensation (including fees received pursuant to any plan adopted by an Unaffiliated Investment Company pursuant to rule 12b–1 under the Act) received from an Unaffiliated Fund by the Adviser, or an affiliated person of the Adviser, other than any advisory fees paid to the Adviser or its affiliated person by the Unaffiliated Investment Company, in connection with the investment by the Fund of Funds in the Unaffiliated Fund. Any Sub-Adviser will waive fees otherwise payable to the Sub-Adviser, directly or indirectly, by the Fund of Funds in an amount at least equal to any compensation received by the Sub-Adviser, or an affiliated person of the Sub-Adviser, from an Unaffiliated Fund, other than any advisory fees paid to the Sub-Adviser or its affiliated person by the Unaffiliated Investment Company in connection with the investment by the Fund of Funds in the Unaffiliated Fund made at the direction of the Sub-Adviser. In the event that the Sub-Adviser waives fees, the benefit of the waiver will be passed through to the Fund of Funds.

11. Any sales charges and/or service fees charged with respect to shares of a Fund of Funds will not exceed the limits applicable to funds of funds set forth in NASD Conduct Rule 2830.

12. No Underlying Fund will acquire securities of any other investment company, or company relying on section 3(c)(1) or 3(c)(7) of the Act, in excess of the limits contained in section 12(d)(1)(A) of the Act, except to the extent that such Underlying Fund: (a) Receives securities of another investment company as a dividend or as a result of a plan of reorganization of a company (other than a plan devised for the purpose of evading section 12(d)(1) of the Act); or (b) acquires (or is deemed to have acquired) securities of another investment company pursuant to exemptive relief from the Commission permitting such Underlying Fund to: (i) Acquire securities of one or more investment companies, for short-term cash management purposes or (ii) engage in inter-fund borrowing and lending transactions.

For the Commission, by the Division of Investment Management, pursuant to delegated authority.

Kevin M. O'Neill,

Deputy Secretary.

[FR Doc. 2012–24293 Filed 10–2–12; 8:45 am]

BILLING CODE 8011–01–P

SECURITIES AND EXCHANGE COMMISSION

[Release No. 34–67937; File No. SR–CBOE–2012–091]

Self-Regulatory Organizations; Chicago Board Options Exchange, Incorporated; Notice of Filing and Immediate Effectiveness of a Proposed Rule To Eliminate Position and Exercise Limits for Physically-Settled SPY Options on a Pilot Basis

September 27, 2012.

Pursuant to Section 19(b)(1) of the Securities Exchange Act of 1934 (the ''Act''),[1] and Rule 19b–4 thereunder,[2] notice is hereby given that on September 14, 2012, the Chicago Board Options Exchange, Incorporated (the ''Exchange'' or ''CBOE'') filed with the Securities and Exchange Commission (the ''Commission'') the proposed rule change as described in Items I and II below, which Items have been prepared by the Exchange. The Exchange filed the proposal as a ''non-controversial'' proposed rule change pursuant to Section 19(b)(3)(A)(iii) of the Act[3] and Rule 19b–4(f)(6) thereunder.[4] The Commission is publishing this notice to solicit comments on the proposed rule change from interested persons.

I. Self-Regulatory Organization's Statement of the Terms of Substance of the Proposed Rule Change

CBOE proposes to amend its rules to eliminate position and exercise limits for physically-settled options on the SPDR S&P 500 ETF Trust (''SPY'') pursuant to a pilot program. The text of the proposed rule change is available on the Exchange's Web site (*http://www.cboe.org/legal*), at the Exchange's Office of the Secretary, and at the Commission's Public Reference Room.

II. Self-Regulatory Organization's Statement of the Purpose of, and Statutory Basis for, the Proposed Rule Change

In its filing with the Commission, the self-regulatory organization included statements concerning the purpose of and basis for the proposed rule change and discussed any comments it received on the proposed rule change. The text of those statements may be examined at the places specified in Item IV below. The Exchange has prepared summaries, set forth in sections A, B, and C below, of the most significant parts of such statements.

[1] 15 U.S.C. 78s(b)(1).

[2] 17 CFR 240.19b–4.

[3] 15 U.S.C. 78s(b)(3)(A)(iii).

[4] 17 CFR 240.19b–4(f)(6).

A. Self-Regulatory Organization's Statement of the Purpose of, and Statutory Basis for, the Proposed Rule Change

1. Purpose

CBOE proposes to amend Interpretation and Policy .07 to Rule 4.11 to eliminate position and exercise limits for physically-settled SPY options pursuant to a pilot program.[5] This filing is based on a filing previously submitted by NYSE MKT LLC (f/k/a NYSE Amex, LLC (''NYSE Amex'')), which the Commission recently approved.[6]

The Exchange began trading SPY options on January 10, 2005 on the CBOE Hybrid Trading System. That year, the position limit for these options was increased from 75,000 contracts to 300,000 contracts on the same side of the market.[7] In July 2011, the position limit for these options was again increased from 300,000 contracts to the current limit of 900,000 contracts on the same side of the market.[8]

The underlying SPY tracks the performance of the S&P 500 Index and the Exchange states that the SPY and SPY options have deep, liquid markets that reduce concerns regarding manipulation and disruption in the underlying markets. In support of this proposed rule change, the Exchange has collected the following trading statistics for SPY and SPY options: (1) The average daily volume (''ADV'') to date (as of August 24 2012) for SPY is 148 million shares; (2) the ADV to date in 2012 for SPY options is 2.6 million; (3) the total shares outstanding for SPY are 750.3 million; and (4) the fund market cap for SPY is $106 billion. The Exchange represents further that there is tremendous liquidity in the securities that make up the S&P 500 Index. For example, the ADV of the component securities in the S&P 5000 Index for the 6-month period of February 28, 2012 through August 28, 2012 was 635,583,189.

Under the Exchange's proposal, the options reporting requirement for SPY options would continue unabated. Thus, the Exchange would still require that each Trading Permit Holder (''TPH'') or TPH organization that maintains a position in SPY options on the same side of the market, for its own account or for the account of a customer, report certain information to the Exchange. This information would include, but would not be limited to, the option position, whether such position is hedged and, if so, a description of the hedge, and the collateral used to carry the position, if applicable. Exchange market-makers (including Designated Primary Market-Makers) would continue to be exempt from this reporting requirement, as market-maker information can be accessed through the Exchange's market surveillance systems. In addition, the general reporting requirement for customer accounts that maintain an aggregate position of 200 or more option contracts would remain at this level for SPY options.[9]

In addition, CBOE Rule 4.12 [sic] provides:

> In addition to the reporting requirement described in paragraph (a) of this Rule, each Trading Permit Holder (other than an Exchange market-maker or DPM) that maintains a position in excess of 10,000 non-FLEX equity option contracts on the same side of the market on behalf of its own account or for the account of a customer, shall report information as to whether such positions are hedged, and provide documentation to as to how such contracts are hedged, in a manner and form prescribed by the Exchange. In addition, whenever the Exchange determines based on a report to the Department of Market Regulation or otherwise, that a higher margin requirement is necessary in light of the risks associated with an under-hedged Non-FLEX equity option position in excess of 10,000 contracts on the same side of the market, the Exchange may consider imposing additional margin upon the account maintaining such under-hedged position, pursuant to its authority under Exchange Rule 12.10. Additionally, it should be noted that the clearing firm carrying the account will be subject to capital charges under SEC Rule 15c3–1 to the extent of any margin deficiency resulting from the higher margin requirements.

As the anniversary of listed options trading approaches its fortieth year, the Exchange believes that the existing surveillance procedures and reporting requirements at CBOE, other options exchanges, and at the several clearing firms are capable of properly identifying unusual and/or illegal trading activity. In addition, routine oversight inspections of the Exchange's regulatory programs by the Commission have not uncovered any material inconsistencies or shortcomings in the manner in which the Exchange's market surveillance is conducted. These procedures utilize daily monitoring of market movements via automated surveillance techniques

[5] By virtue of CBOE Rule 4.12, Interpretation and Policy .02, which is not being amended by this filing, the exercise limit for SPY options would be similarly eliminated.

[6] *See* Securities Exchange Act Release No. 67672 (August 15, 2012) 77 FR 50750 (August 22, 2012) (SR–NYSEAmex–2012–29).

[7] *See* Securities Exchange Act Release No. 51041 (January 14, 2005), 70 FR 3408 (January 24, 2005) (SR–CBOE–2005–06).

[8] *See* Securities Exchange Act Release No. 64928 (July 20, 2011), 76 FR 44633 (July 26, 2011) (SR–CBOE–2011–065).

[9] *See* CBOE Rule 4.13(a).

to identify unusual activity in both options and underlying stocks.[10]

Furthermore, large stock holdings must be disclosed to the Commission by way of Schedules 13D or 13G.[11] Options positions are part of any reportable positions and, thus, cannot be legally hidden. Moreover, the Exchange's requirement that TPHs file reports with the Exchange for any customer who held aggregate large long or short positions of any single class for the previous day will continue to serve as an important part of the Exchange's surveillance efforts.

The Exchange believes that the current financial requirements imposed by the Exchange and by the Commission adequately address concerns that a TPH or its customer may try to maintain an inordinately large un-hedged position in an option, particularly on SPY. Current margin and risk-based haircut methodologies serve to limit the size of positions maintained by any one account by increasing the margin and/or capital that a TPH must maintain for a large position held by itself or by its customer.[12] In addition, the Commission's net capital rule, Rule 15c3–1 [13] under the Securities Exchange Act of 1934 (the ''Act''),[14] imposes a capital charge on TPHs to the extent of any margin deficiency resulting from the higher margin requirement.

Pilot Program

The Exchange proposes that this rule change be adopted pursuant to a pilot program, set to expire November 27, 2013.[15] The Exchange will perform an analysis of the initial pilot program to eliminate position limits in SPY after the first twelve (12) months of the pilot program (the ''Pilot Report''). The Pilot Report will detail the size and different types of strategies employed with respect to positions established as a result of the elimination of position limits in SPY. In addition, the report will note whether any problems resulted due to the no limit approach and any other information that may be useful in evaluating the effectiveness of the pilot program. The Pilot Report will compare the impact of the pilot program, if any, on the volumes of SPY options and the volatility in the price of the underlying SPY shares, particularly at expiration. In preparing the report the Exchange will utilize various data elements such as volume and open interest. In addition the Exchange will make available to Commission staff data elements relating to the effectiveness of the pilot program.

Conditional on the findings in the Pilot Report, CBOE will file with the Commission a proposal to either extend the pilot program, adopt the pilot program on a permanent basis, or terminate the pilot program. If the pilot program is not extended or adopted on a permanent basis by November 27, 2013, the position limits for SPY would revert to limits in effect at the commencement of the pilot program.

The Exchange believes that the elimination of position and exercise limits on SPY options on a pilot basis is required for competitive purposes as well as for purposes of consistency and uniformity among the competing options exchanges. This supports the Exchange's current proposal to eliminate the position and exercise limits applicable to physically-settled SPY options on a pilot basis.

2. Statutory Basis

The Exchange believes the proposed rule change is consistent with the Act and the rules and regulations thereunder, including the requirements of Section 6(b) of the Act.[16] In particular, the Exchange believes the proposed rule change is consistent with the Section 6(b)(5) [17] requirements that the rules of an exchange be designed to promote just and equitable principles of trade, to prevent fraudulent and manipulative acts, to foster cooperation and coordination with persons engaged in facilitating transactions in securities, to remove impediments to and to perfect the mechanism for a free and open market and a national market system, and, in general, to protect investors and the public interest.

Specifically, the proposed rule change will benefit large market makers (which generally have the greatest potential and actual ability to provide liquidity and depth in the product), as well as retail traders, investors, and public customers, by providing them with a more effective trading and hedging vehicle. In addition, the Exchange believes that the structure of SPY options and the considerable liquidity of the market for SPY options diminish the opportunity to manipulate this product and disrupt the underlying market that a lower position limit may protect against. The Exchange also believes that the proposed rule change will benefit a greater number of market participants who are CBOE TPHs and members of other exchanges, such as NYSE Amex. This is because SPY is a multiply listed options class and currently there is not a uniform and consistent position and exercise limits regime across all of the exchanges that list SPY options. The proposed filing will benefit market participants because it will ensure consistency and uniformity among the competing options exchanges as to the position and exercise limits for a multiply listed options class.

B. Self-Regulatory Organization's Statement on Burden on Competition

CBOE does not believe that the proposed rule change will impose any burden on competition not necessary or appropriate in furtherance of the purposes of the Act.

C. Self-Regulatory Organization's Statement on Comments on the Proposed Rule Change Received From Members, Participants, or Others

No written comments were solicited or received with respect to the proposed rule change.

III. Date of Effectiveness of the Proposed Rule Change and Timing for Commission Action

Because the proposed rule change does not: (i) Significantly affect the protection of investors or the public interest; (ii) impose any significant burden on competition; and (iii) become operative prior to 30 days from the date on which it was filed, or such shorter time as the Commission may designate, the proposed rule change has become effective pursuant to Section 19(b)(3)(A) of the Act [18] and Rule 19b–4(f)(6) thereunder.[19]

A proposed rule change filed pursuant to Rule 19b–4(f)(6) under the Act [20] normally does not become operative for 30 days after the date of its filing. However, Rule 19b–4(f)(6) [21] permits the Commission to designate a shorter time if such action is consistent with the protection of investors and the public interest. The Exchange has asked the Commission to waive the 30-day operative delay, noting that doing so will ensure fair competition among

[10] These procedures have been effective for the surveillance of SPY options trading and will continue to be employed.

[11] 17 CFR 240.13d–1.

[12] *See* CBOE Rule 12.3 for a description of margin requirements.

[13] 17 CFR 240.15c3–1.

[14] 15 U.S.C. 78s(b)(1).

[15] The Exchange will notify CBOE Trading Permit Holders of the establishment of the pilot program and the running dates of the pilot program via regulatory circular.

[16] 15 U.S.C. 78f(b).

[17] 15 U.S.C. 78f(b)(5).

[18] 15 U.S.C. 78s(b)(3)(A).

[19] 17 CFR 240.19b–4(f)(6). In addition, Rule 19b–4(f)(6) requires a self-regulatory organization to give the Commission written notice of its intent to file the proposed rule change at least five business days prior to the date of filing of the proposed rule change, or such shorter time as designated by the Commission. The Exchange has satisfied this requirement.

[20] 17 CFR 240.19b–4(f)(6).

[21] 17 CFR 240.19b–4(f)(6).

options exchanges and immediately benefit market participants who are CBOE TPHs and members of other exchanges, such as NYSE Amex, by ensuring consistency and uniformity across options exchanges with respect to the multiply listed SPY options class. The Commission believes that waiving the 30-day operative delay is consistent with the protection of investors and the public interest. Therefore, the Commission designates the proposal operative as of September 27, 2012.[22]

At any time within 60 days of the filing of the proposed rule change, the Commission summarily may temporarily suspend such rule change if it appears to the Commission that such action is necessary or appropriate in the public interest, for the protection of investors, or otherwise in furtherance of the purposes of the Act.

IV. Solicitation of Comments

Interested persons are invited to submit written data, views, and arguments concerning the foregoing, including whether the proposed rule change is consistent with the Act. Comments may be submitted by any of the following methods:

Electronic Comments

- Use the Commission's Internet comment form (*http://www.sec.gov/rules/sro.shtml*); or
- Send an email to *rule-comments@sec.gov.* Please include File Number SR–CBOE–2012–091 on the subject line.

Paper Comments

- Send paper comments in triplicate to Elizabeth M. Murphy, Secretary, Securities and Exchange Commission, 100 F Street NE., Washington, DC 20549–1090.

All submissions should refer to File Number *SR–CBOE–2012–091.* This file number should be included on the subject line if email is used. To help the Commission process and review your comments more efficiently, please use only one method. The Commission will post all comments on the Commission's Internet Web site (*http://www.sec.gov/rules/sro.shtml).* Copies of the submission, all subsequent amendments, all written statements with respect to the proposed rule change that are filed with the Commission, and all written communications relating to the proposed rule change between the Commission and any person, other than those that may be withheld from the public in accordance with the provisions of 5 U.S.C. 552, will be available for Web site viewing and printing in the Commission's Public Reference Room, 100 F Street NE., Washington, DC 20549, on official business days between the hours of 10:00 a.m. and 3:00 p.m. Copies of the filing also will be available for inspection and copying at the principal office of the Exchange. All comments received will be posted without change; the Commission does not edit personal identifying information from submissions. You should submit only information that you wish to make available publicly.

All submissions should refer to File Number SR–CBOE–2012–091 and should be submitted on or before October 24, 2012.

For the Commission, by the Division of Trading and Markets, pursuant to delegated authority.[23]

Kevin M. O'Neill,

Deputy Secretary.

[FR Doc. 2012–24288 Filed 10–2–12; 8:45 am]

BILLING CODE 8011–01–P

[22] For purposes only of waiving the 30-day operative delay, the Commission has considered the proposed rule's impact on efficiency, competition, and capital formation. *See* 15 U.S.C. 78c(f).

[23] 17 CFR 200.30–3(a)(12).

SECURITIES AND EXCHANGE COMMISSION

[Release No. 34–67936; File No. SR–BOX–2012–013]

Self-Regulatory Organizations; BOX Options Exchange LLC; Notice of Filing of Proposed Rule Change To Eliminate Position Limits for Options on the SPDR® S&P 500® Exchange-Traded Fund,[1] Which List and Trade Under the Symbol SPY

September 27, 2012.

Pursuant to Section 19(b)(1) of the Securities Exchange Act of 1934 (''Act''),[2] and Rule 19b–4 thereunder,[3] notice is hereby given that on September 17, 2012, BOX Options Exchange LLC (the ''Exchange'') filed with the Securities and Exchange Commission (''Commission'') the proposed rule change as described in Items I and II below, which Items have been prepared by the self-regulatory organization. The Commission is publishing this notice to solicit comments on the proposed rule from interested persons.

I. Self-Regulatory Organization's Statement of the Terms of Substance of the Proposed Rule Change

The Exchange proposes to amend IM–3120–2 to Rule 3120 (Position Limits) to eliminate position limits for options on the SPDR® S&P 500® exchange-traded fund (''SPY ETF''),[4] which list and trade under the symbol SPY. The text of the proposed rule change is available from the principal office of the Exchange, on the Exchange's Internet Web site at *http://boxexchange.com,* and at the Commission's Public Reference Room.

II. Self-Regulatory Organization's Statement of the Purpose of, and Statutory Basis for, the Proposed Rule Change

In its filing with the Commission, the self-regulatory organization included statements concerning the purpose of, and basis for, the proposed rule change and discussed any comments it received on the proposed rule change. The text of these statements may be examined at the places specified in Item IV below. The self-regulatory organization has prepared summaries, set forth in Sections A, B, and C below, of the most significant aspects of such statements.

A. Self-Regulatory Organization's Statement of the Purpose of, and Statutory Basis for, the Proposed Rule Change

1. Purpose

The Exchange proposes to amend Interpretive Material IM–3120–2 to Rule 3120 (Position Limits) to eliminate position limits for SPY options.

Background

Position limits serve as a regulatory tool designed to address potential manipulative schemes and adverse market impact surrounding the use of options. The Exchange understands that the Commission, when considering the appropriate level at which to set option position and exercise limits, has considered the concern that the limits be sufficient to prevent investors from disrupting the market in the security underlying the option.[5] This consideration has been balanced by the concern that the limits ''not be established at levels that are so low as to discourage participation in the options market by institutions and other

[1] ''SPDR®,'' ''Standard & Poor's®,'' ''S&P®,'' ''S&P 500®,'' and ''Standard & Poor's 500'' are registered trademarks of Standard & Poor's Financial Services LLC. The SPY ETF represents ownership in the SPDR S&P 500 Trust, a unit investment trust that generally corresponds to the price and yield performance of the SPDR S&P 500 Index.

[2] 15 U.S.C. 78s(b)(1).

[3] 17 CFR 240.19b–4.

[4] *See supra* note 1.

[5] *See* Securities Exchange Act Release No. 40969 (January 22, 1999), 64 FR 4911, 4912–4913 (February 1, 1999) (SR–CBOE–98–23) (citing H.R. No. IFC–3, 96th Cong., 1st Sess. at 189–91 (Comm. Print 1978)).

investors with substantial hedging needs or to prevent specialists and market-makers from adequately meeting their obligations to maintain a fair and orderly market.'' [6]

SPY options are currently the most actively traded option class in terms of average daily volume (''ADV'').[7] The Exchange believes that, despite the popularity of SPY options as evidenced by their significant volume, the current position limits on SPY options could be a deterrent to the optimal use of this product as a hedging tool. The Exchange further believes that position limits on SPY options may inhibit the ability of certain large market participants, such as mutual funds and other institutional investors with substantial hedging needs, to utilize SPY options and gain meaningful exposure to the hedging function they provide.

The Exchange believes that current experience with the trading of SPY options, as well as the Exchange's surveillance capabilities, has made it appropriate to consider other, less prophylactic alternatives to regulating SPY options, while still seeking to ensure that large positions in SPY options will not unduly disrupt the options or underlying cash markets. Accordingly, the Exchange proposes to eliminate the position limits on SPY options—currently 900,000 contracts on the same side of the market.[8] In proposing the elimination of position limits on SPY options, the Exchange has considered several factors, including (1) the availability of economically equivalent products and their respective position limits, (2) the liquidity of the option and the underlying security, (3) the market capitalization of the underlying security and the related index, (4) the reporting of large positions and requirements surrounding margin, and (5) the potential for market on close volatility.

Economically Equivalent Products

The Exchange has considered the existence of economically equivalent or similar products, and their respective position limits, if any, in assessing the appropriateness of proposing an elimination of position limits for SPY options. For example, AM-settled options on the S&P 500 Index, which list and trade exclusively on the Chicago Board Options Exchange (''CBOE'') under the symbol SPX, are currently not subject to position limits.[9] Moreover, SPX options are 10 times the size of SPY options, so that a position of only 90,000 SPX options is the equivalent of a position of 900,000 SPY options, which is the current position limit for SPY options.[10]

Similarly, the C2 Options Exchange (''C2'') has recently introduced a PM-settled S&P 500 cash settled contract (''SPXPM''), which also is not subject to position limits.[11] This contract, unlike the existing SPX contract, is cash-settled based on the closing value of the S&P 500 Index. In this respect, SPXPM is very much like SPY options in that it is settled at the close, albeit into cash as opposed to shares of the underlying like SPY options.

The Exchange believes that, because SPX, SPXPM, and SPY options are ultimately derivative of the same benchmark—the S&P 500 Index—they should be treated equally from a position limit perspective. As a practical matter, investors utilize SPX, SPXPM, and SPY options and their respective underlying instruments and futures to gain exposure to the same benchmark index: The S&P 500. Further, because the creation and redemption process for the underlying SPY ETF allows large investors to transfer positions from a basket of stocks comprising the S&P 500 index to an equivalent number of ETF shares (and the reverse) with relative ease, there is no reason to disadvantage options overlying the one versus the other. The Exchange believes that this view is supported by the recent expansion of various exemptions from position limits, such as the Delta-Based Equity Hedge Exemption [12] for positions of a BOX Options Participant (''Participant'') or non-Participant affiliate that are delta neutral, which allows SPY option positions to be delta-hedged by positions in SPX options. Given that SPX options are not subject to position limits, a Participant (or non-Participant affiliate thereof) could theoretically establish a position in SPY options far in excess of the current 900,000 contract limit, provided that the position is hedged with SPX options. The Exchange believes that this situation accurately reflects the economic equivalence of SPX and SPY options, supporting the Exchange's proposal to further acknowledge this equivalence by eliminating position limits in SPY options.

The Exchange also believes that Commission findings in approving the SPXPM options further support treating SPY options in the same manner as SPX and SPXPM options for purposes of position limits. In particular, the Commission noted in approving SPXPM options that ''C2's proposal will offer investors another investment option through which they could obtain and hedge exposure to the S&P 500 stocks,'' and that ''C2's proposal will provide investors with the ability to trade an option on the S&P 500 index in an all-electronic market, which may better meet the needs of investors who may prefer to trade electronically.'' [13] The Commission also noted that ''C2's proposal will provide investors with added flexibility through an additional product that may be better tailored to meet their particular investment, hedging, and trading needs.'' [14] The Exchange believes that these Commission findings apply equally to SPY options. In this respect, SPY options with no position limit will (1) offer investors another investment option through which they could obtain and hedge significant levels of exposure to the S&P 500 stocks, (2) be available to trade on the Exchange (and presumably all other U.S. options exchanges) electronically, and (3) provide investors with added flexibility through an additional product that may be better tailored to meet their particular investment, hedging, and trading needs, because, among other things, they are PM-settled.

The Exchange notes that, with respect to competition amongst economically equivalent products, a 2005 paper by Hans Dutt and Lawrence Harris that set forth a model to determine appropriate position limits for cash-settled index derivatives observed that ''markets and their regulators should take a closer look at the underlying economic rationale for the levels at which they currently set their position limits to ensure that the limits adequately protect markets from manipulation and that inconsistent position limits do not produce competitive advantages and

[6] *Id.* at 4913.

[7] SPY ADV was 2,156,482 contracts in April 2012. ADV for the same period for the next four most actively traded options was: Apple Inc. (option symbol AAPL)—1,074,351; S&P 500 Index (option symbol SPX)—656,250; PowerShares QQQ Trust℠, Series 1 (option symbol QQQ)—573,790; and iShares® Russell 2000® Index Fund (option symbol IWM)—550,316.

[8] *See* IM–3120–2 to Rule 3120.

[9] *See* Securities Exchange Act Release No. 44994 (October 26, 2001), 66 FR 55722 (November 2, 2001) (SR–CBOE–2001–22). Position limits were also eliminated for options on the S&P 100 Index (option symbol OEX) and the Dow Jones Industrial Average (option symbol DJX).

[10] The Exchange notes that the reduced-value option on the S&P 500 Index (option symbol XSP) is the equivalent size of SPY options and, similar to SPX options, is not subject to position limits. *See* Securities Exchange Act Release No. 56350 (September 4, 2007), 72 FR 51878 (September 11, 2007) (SR–CBOE–2007–79).

[11] *See* Securities Exchange Act Release No. 65256 (September 2, 2011), 76 FR 55969 (September 9, 2011) (SR–C2–2011–008) (''SPXPM Approval'').

[12] *See* Rule 3130(c).

[13] *See* SPXPM Approval at 55975.

[14] *Id.*

disadvantages among contracts.'' [15] On this point, the Exchange believes that if no position limits have been found to be warranted on both SPX and SPXPM options, then such treatment should be extended to SPY options so that inconsistent position limits do not produce competitive advantages and disadvantages among contracts.

In addition, the Exchange notes that the Dutt-Harris Paper focuses its attention on the concerns relating to manipulation of cash-settled derivatives, stating that ''[a]lthough several scholars have argued that cash settlement may increase the risk of market manipulation, until recently, the theoretical problems arising from potential cash settlement manipulation has been considered minor, as evidenced by the lack of academic interest in this area.'' [16] The paper further noted that ''[t]he reason for this may arise from the fact that most exchange-traded derivative index contracts that are cash settled are broad-based, and each of the underlying components typically possesses ample liquidity,'' and that ''manipulation of the underlying components would likely be extremely costly to the would-be manipulator.'' [17] This suggests that whatever manipulation risk does exist in a cash-settled, broad-based product such as SPXPM, the corresponding manipulation risk in a physically-settled, but equally broad-based product such as SPY, is likely to be equally low, if not lower.

Similarly, the Exchange notes that in the Dutt-Harris Paper the authors observed that the lack of scholarly interest in the cash-settlement manipulation problem may have been ''due to the fact that, until recently, most U.S. exchange-traded cash-settled derivative contracts were based on broad indices of very liquid stocks,'' and that ''[m]anipulation of such instruments require very large trades that are costly to make and easy to detect through conventional surveillance.'' [18] This observation applies equally to SPY options, which are based on a broad index of very liquid stocks and can easily be created by submitting a position in the underlying securities. Moreover, it provides additional support for the Exchange's view that the enhanced reporting and surveillance for SPY options discussed below adequately address concerns about manipulation.[19]

Liquidity in the Option and the Underlying Security

The Exchange has also considered the liquidity of SPY options and the underlying SPY ETF in assessing the appropriateness of proposing an elimination of position limits for SPY options.

In approving the elimination of position and exercise limits on SPX options, the Commission noted that the deep, liquid markets for the securities underlying the S&P 500 Index reduced concerns regarding market manipulation or disruption in the underlying markets.[20] The Commission further noted that removing position limits for SPX options could also bring additional depth and liquidity, in terms of both volume and open interest, without increasing concerns regarding intermarket manipulations or disruptions of the options or the underlying securities.[21] The Exchange similarly believes that this would be the case if position limits for SPY options were eliminated.

In this regard, both the SPY ETF and SPY options similarly exhibit deep, liquid markets. However, SPY options are not as active as SPX options when adjusted for the difference in their notional size.[22] As described below, the Exchange believes that this is partly due to the existence of position limits for SPY options. The table below compares the ADV in both SPX and SPY options, and includes an ''implied SPY volume'' figure that reflects theoretical SPY ADV without the constraint of position limits:

Date range	Trade days	SPX option ADV	SPY option ADV	Implied SPY option ADV	Implied SPY option ADV shortfall
Jan. 1, 2011 to Dec. 31, 2011	252	1,567,535	5,789,511	15,675,353	9,885,842
Jan. 1, 2012 to Apr. 19, 2012	75	1,343,735	4,525,709	13,437,353	8,911,644

The Exchange believes that certain factors may result in SPX options—adjusted for their larger notional size—currently trading with greater volume than SPY options.[23] In this regard, the Exchange believes that, based on input from various market participants, the existence of position limits in SPY options is reason in itself to instead utilize SPX options. Anecdotally, market participants perceive value in avoiding the regulatory risk of exceeding the SPY option position limit by instead using SPX options for their hedging needs. The Exchange also believes that, while exemptions are available with respect to position limits for SPY options, such exemptions, and the regulatory burden attendant therewith, may dissuade investors from using SPY options when they can instead use an SPX option without the need for such an exemption. Because SPY and SPX options are economically equivalent products, an investor deciding between the two would generally trade the product with the least barriers or requirements to engage in such activity. In this respect, SPX options are currently the easier product to trade.

As a further comparison, the following table sets forth certain data for both the SPY ETF and the combined volume for the component securities upon which the S&P 500 Index is based:

[15] *The Journal of Futures Markets,* Vol. 25, no. 10, 945–965, 949 (2005) (''Position Limits for Cash-Settled Derivative Contracts,'' by Hans R. Dutt and Lawrence E. Harris) (''Dutt-Harris Paper''). In the paper, the authors examined existing position limits to determine whether they were consistent with the model the authors developed, and found that the results indicated that existing limits were not correlated with the limits suggested by their model.

[16] *Id.* at 946.

[17] *Id.*

[18] *Id.* at 948.

[19] The authors of the Dutt-Harris Paper further posited that ''position limits need only apply during the period when cash settlement takes place.'' *Id.* at 964. The Exchange notes that no such period exists with respect to SPY options, which are physically settled.

[20] *See supra* note 5 at 4913.

[21] *Id.*

[22] SPX options have a notional value 10 times greater than SPY options (i.e., one SPX contract equals 10 SPY contracts).

[23] The Exchange notes that the ''Implied SPY Option ADV Shortfall'' has narrowed over time and at an accelerated rate, which the Exchange believes is a direct result of the implementation of the Delta-Based Equity Hedge Exemption that allows SPY options to be hedged via SPX options.

Date range	S&P 500 Index underlying component ADV[24]	S&P 500 Index underlying component average daily value traded	SPY ETF ADV	SPY ETF average daily value traded
Jan.1, 2011 to Dec. 31, 2011	3,289,595,675	$4,149,726,217,456	218,227,747	$27,297,097,993
Jan. 1, 2012 to Apr. 19, 2012	2,851,457,600	3,860,704,307,080	145,164,527	19,684,577,239

This data shows that there is tremendous liquidity in both SPY ETF shares and the component securities upon which the S&P 500 Index is based. While the ADV for the components underlying the S&P 500 Index is greater than the ADV for the SPY ETF, the Exchange believes that SPY ETF volume has been, is currently and will likely continue to be within a range that the Commission has previously determined to be a deep, liquid market.[25]

Market Capitalization of the Underlying Security and the Related Index

The Exchange has also considered the market capitalization of the SPY ETF and the S&P 500 Index in assessing the appropriateness of proposing an elimination of position limits for SPY options.

The Exchange understands that the Commission similarly considered the market capitalization of the underlying index when it approved the elimination of position limits in SPX options. Accordingly, the Exchange believes that the capitalization of and the deep, liquid markets for the underlying SPY ETF reduces concerns regarding market manipulation or disruption in the underlying market. The table below shows the market capitalization of the SPY ETF and the S&P 500 Index:

Date range	Average S&P 500 Index market cap	Average SPY ETF market cap
Jan.1, 2011 to Dec. 31, 2011	$11,818,270,341,270	$89,533,777,897
Jan. 1, 2012 to Apr. 19, 2012	12,547,946,920,000	99,752,986,022

This data shows the enormous capitalization of both the SPY ETF and the component securities upon which the S&P 500 Index is based. While the capitalization for the components underlying the S&P 500 Index is greater than that for the SPY ETF, the Exchange believes that the SPY ETF capitalization has nonetheless been, is currently and will likely continue to be at a level consistent with that which the Commission has previously determined to be enormously capitalized.[26]

The Exchange notes that the theoretical limit on one's ability to hedge both SPX and SPY options is the full market capitalization of the S&P 500 Index itself. This similarly contributes to the Exchange's determination that it is appropriate for position limits on SPY options to be eliminated.

Large Position Reporting and Margin Requirements

The Exchange has also considered the reporting of large option positions and related margin requirements in assessing the appropriateness of proposing an elimination of position limits for SPY options.

The Exchange notes that the Large Option Position Reporting (''LOPR'') requirement in Exchange Rule 3150 would continue to apply to positions in SPY options. Rule 3150 requires Participants to file a report with the Exchange with respect to each account in which any general or special partner of the Participant, any officer or director of the Participant, or any Participant, as such, in any joint, group or syndicate account with the Participant or with any partner, officer or director thereof of such Participant; and each customer account, that has established an aggregate position (whether long or short) that meets certain determined thresholds (e.g., 200 or more option contracts of any single class of options). Additionally, Rule 3150(b) requires that, ''Options Participants that maintain an end of day position in excess of 10,000 non-FLEX equity options contracts on the same side of the market on behalf of its own account or for the account of a Customer, shall report whether such position is hedged and provide documentation as to how such position is hedged.'' Further, Rule 3120 also permits the Exchange to impose a higher margin requirement upon the account of a Participant when it determines that the account maintains an under-hedged position pursuant to its authority under Exchange Rule 10130(b). Additionally, it should be noted that the clearing firm carrying the account will be subject to capital charges under Securities Exchange Act Rule 15c3–1 to the extent of any margin deficiency resulting from the higher margin requirements.

Monitoring accounts maintaining large positions provides the Exchange with the information necessary to determine whether to impose additional margin and/or whether to assess capital charges upon a Participant carrying the account. In addition, the Commission's net capital rule, Rule 15c3–1 under the Securities Exchange Act of 1934 (the ''Act''),[27] imposes a capital charge on Participants to the extent of any margin deficiency resulting from the higher margin requirement, which should serve as an additional form of protection.

In approving SPXPM, the Commission addressed concerns about the lack of a position limit by noting that CBOE will rely on its enhanced surveillance requirements and procedures for SPX options to monitor trading activity in SPXPM options.[28] Similarly, the Exchange notes that certain option products are currently traded on the Exchange without position limits (e.g., the NASDAQ® 100 Index option (option symbol NDX)), and believes that the reporting, surveillance and monitoring mechanisms in place for these products

[24] The data considers the aggregate volume for all component stocks of the S&P 500 Index.

[25] *See supra* note 5 at n. 13. The ADV for the components of the indexes underlying the options for which position limits were eliminated were 94.77 million shares (DJX), 244.3 million shares (OEX), and 757.5 million shares (SPX).

[26] *See supra* note 10 at 51879. Specifically, the market capitalization of the component securities of the Russell 2000 Index (''RUT'') of $1.73 trillion was determined to be enormously capitalized.

[27] 17 CFR 240.15c3–1.

[28] *See* SPXPM Approval at 55972.

are effective and could easily accommodate SPY options if position limits thereon are eliminated.

Market on Close Volatility

The Exchange has also considered the potential for resulting or increased market on close volatility in assessing the appropriateness of proposing an elimination of position limits for SPY options.

SPY options are American-style, physically settled options that can be exercised at any time and settle into shares of the underlying SPY ETF. A key characteristic of the SPY ETF is that the number of shares outstanding is limited only by the number of shares available in the component securities of the S&P 500 Index, which can be used to create additional SPY ETF shares as needed. This in-kind creation and redemption mechanism has proven to be quite robust, as evidenced by the SPY ETF's close tracking of its benchmark index and the relatively small premiums or discounts to Net Asset Value (''NAV'') that it has historically exhibited.[29] Additionally, the ability to hedge with SPX options against the stocks underlying the S&P 500 is limited to the shares outstanding for those stocks—the same limit that applies to hedging with SPY options. Accordingly, the Exchange believes that the risk of distortions to the market resulting from the elimination of position limits in SPY options is no greater than the risk presented by SPX options not being subject to position limits.

As a physically-settled option, SPY options can be easily hedged via long or short positions in SPY ETF shares, which, as noted above, can be easily created or redeemed as needed. With a physically-settled contract such as SPY options, once a hedge in the form of a long or short position is obtained, that hedge can only be lost if the underlying security becomes hard to borrow and the short position is bought in.[30] The Exchange believes that this ability to hedge with shares of the SPY ETF is very important, and reduces the likelihood of market on close volatility in the component securities underlying the S&P 500 Index (i.e., a market participant can remain fully hedged through expiration via shares of the SPY ETF), which should also be the case if position limits for SPY options are eliminated. At the same time, the Exchange believes that the elimination of position limits for SPY options would not increase market volatility or facilitate the ability to manipulate the market. The Exchange believes that any potential concern regarding volatility at the closing that could result from an elimination in the position limits for SPY options is further alleviated by the current trading environment, including that there are markets for individual securities on more than one exchange, via unlisted trading privileges, that there is wide dispersion of trading across multiple exchanges, and that exchange procedures and systems are designed to facilitate orderly closings, even when there is volatility.

Pilot Program

The Exchange proposes that this rule change be adopted pursuant to a pilot program, set to expire November 27, 2013. The Exchange will perform an analysis of the initial pilot program to eliminate position limits in SPY after the first twelve (12) months of the pilot program (the ''Pilot Report''). The Pilot Report will be submitted within thirty (30) days of the end of such twelve (12) month time period. The Pilot Report will detail the size and different types of strategies employed with respect to positions established as a result of the elimination of position limits in SPY. In addition, the report will note whether any problems resulted due to the no limit approach and any other information that may be useful in evaluating the effectiveness of the pilot program. The Pilot Report will compare the impact of the pilot program, if any, on the volumes of SPY options and the volatility in the price of the underlying SPY shares, particularly at expiration. In preparing the report, the Exchange will utilize various data elements such as volume and open interest. In addition the Exchange will make available to Commission staff data elements relating to the effectiveness of the pilot program. Conditional on the findings in the Pilot Report, the Exchange will file with the Commission a proposal to either extend the pilot program, adopt the pilot program on a permanent basis, or terminate the pilot program. If the pilot program is not extended or adopted on a permanent basis by November 27, 2013, the position limits for SPY would revert to limits in effect at the commencement of the pilot program.

Implementation

In addition to Commission approval, the implementation of this proposed rule change will be contingent on other factors, including the completion of any changes that may be necessary to the Exchange's regulatory and surveillance program. The Exchange will announce the implementation of the elimination of position limits on SPY options through a notice to Participants after any Commission notice of effectiveness regarding this proposed rule change.

2. Statutory Basis

The Exchange believes that the proposal is consistent with the requirements of Section 6(b) of the Act,[31] in general, and Section 6(b)(5) of the Act,[32] in particular, that the rules of an exchange be designed to promote just and equitable principles of trade, to prevent fraudulent and manipulative acts, to foster cooperation and coordination with persons engaged in facilitating transactions in securities, to remove impediments to and to perfect the mechanism for a free and open market and a national market system, and, in general, to protect investors and the public interest. The Exchange believes that the proposed rule change would be beneficial to market participants, including market makers, institutional investors and retail investors, by permitting them to establish greater positions when pursuing their investment goals and needs. The Exchange also believes that economically equivalent products should be treated in an equivalent manner so as to avoid regulatory arbitrage, especially with respect to position limits. Treating SPY and SPX options differently by virtue of imposing different position limits is inconsistent with the notion of promoting just and equitable principles of trade and removing impediments to perfect the mechanisms of a free and open market. At the same time, the Exchange believes that the elimination of position limits for SPY options would not increase market volatility or facilitate the ability to manipulate the market.

B. Self-Regulatory Organization's Statement on Burden on Competition

The Exchange does not believe that the proposed rule change will impose any burden on competition not necessary or appropriate in furtherance of the purposes of the Act.

[29] *See* SPDR® S&P 500® ETF Trust, Annual Report (September 30, 2011), available at *https://www.spdrs.com/librarycontent/public/SPY%20Annual%20Report%2009.30.11.pdf.*

[30] As noted, the in-kind creation and redemption process allows for short term imbalances in supply and demand to be resolved readily, which in turn reduces the likelihood of getting ''bought in'' on a short position in SPY. Since the implementation of Regulation SHO, SPY has never been on the threshold security list, which further evidences the efficacy of the in-kind creation and redemption process in resolving imbalances in supply and demand.

[31] 15 U.S.C. 78f(b).

[32] 15 U.S.C. 78f(b)(5).

C. Self-Regulatory Organization's Statement on Comments on the Proposed Rule Change Received From Members, Participants, or Others

The Exchange has neither solicited nor received comments on the proposed rule change.

III. Date of Effectiveness of the Proposed Rule Change and Timing for Commission Action

Because the proposed rule change does not: (i) Significantly affect the protection of investors or the public interest; (ii) impose any significant burden on competition; and (iii) become operative prior to 30 days from the date on which it was filed, or such shorter time as the Commission may designate, the proposed rule change has become effective pursuant to Section 19(b)(3)(A) of the Act [33] and Rule 19b–4(f)(6) thereunder.[34]

A proposed rule change filed pursuant to Rule 19b–4(f)(6) under the Act [35] normally does not become operative for 30 days after the date of its filing. However, Rule 19b–4(f)(6) [36] permits the Commission to designate a shorter time if such action is consistent with the protection of investors and the public interest. The Exchange has asked the Commission to waive the 30-day operative delay, noting that doing so will allow the Exchange to remain competitive with other options exchanges, avoid potential regulatory inconsistencies for Participants that are also members of NYSE Amex and seamlessly continue to offer traders and the investing public the ability to use SPY options as an effective hedging and trading vehicle. The Commission believes that waiving the 30-day operative delay is consistent with the protection of investors and the public interest. Therefore, the Commission designates the proposal operative as of September 27, 2012.[37]

At any time within 60 days of the filing of the proposed rule change, the Commission summarily may temporarily suspend such rule change if it appears to the Commission that such action is necessary or appropriate in the public interest, for the protection of investors, or otherwise in furtherance of the purposes of the Act.

IV. Solicitation of Comments

Interested persons are invited to submit written data, views, and arguments concerning the foregoing, including whether the proposed rule change is consistent with the Act. Comments may be submitted by any of the following methods:

Electronic Comments

- Use the Commission's Internet comment form (*http://www.sec.gov/rules/sro.shtml*); or
- Send an email to *rule-comments@sec.gov*. Please include File Number SR–BOX–2012–013 on the subject line.

Paper Comments

- Send paper comments in triplicate to Elizabeth M. Murphy, Secretary, Securities and Exchange Commission, 100 F Street NE., Washington, DC 20549–1090.

All submissions should refer to File Number SR–BOX–2012–013. This file number should be included on the subject line if email is used. To help the Commission process and review your comments more efficiently, please use only one method. The Commission will post all comments on the Commission's Internet Web site (*http://www.sec.gov/rules/sro.shtml*). Copies of the submission, all subsequent amendments, all written statements with respect to the proposed rule change that are filed with the Commission, and all written communications relating to the proposed rule change between the Commission and any person, other than those that may be withheld from the public in accordance with the provisions of 5 U.S.C. 552, will be available for Web site viewing and printing in the Commission's Public Reference Room, 100 F Street, NE., Washington, DC 20549, on official business days between the hours of 10:00 a.m. and 3:00 p.m. Copies of the filing also will be available for inspection and copying at the principal office of the Exchange. All comments received will be posted without change; the Commission does not edit personal identifying information from submissions. You should submit only information that you wish to make available publicly.

All submissions should refer to File Number SR–BOX–2012–013 and should be submitted on or before October 24, 2012.

For the Commission, by the Division of Trading and Markets, pursuant to delegated authority.[38]

Kevin M. O'Neill,

Deputy Secretary.

[FR Doc. 2012–24287 Filed 10–2–12; 8:45 am]

BILLING CODE 8011–01–P

[33] 15 U.S.C. 78s(b)(3)(A).

[34] 17 CFR 240.19b–4(f)(6). In addition, Rule 19b–4(f)(6) requires a self-regulatory organization to give the Commission written notice of its intent to file the proposed rule change at least five business days prior to the date of filing of the proposed rule change, or such shorter time as designated by the Commission. The Exchange has satisfied this requirement.

[35] 17 CFR 240.19b–4(f)(6).

[36] 17 CFR 240.19b–4(f)(6).

[37] For purposes only of waiving the 30-day operative delay, the Commission has considered the proposed rule's impact on efficiency, competition, and capital formation. *See* 15 U.S.C. 78c(f).

[38] 17 CFR 200.30–3(a)(12).

SECURITIES AND EXCHANGE COMMISSION

[Release No. 34–67938; File No. SR–CBOE–2012–093]

Self-Regulatory Organizations; Chicago Board Options Exchange, Incorporated; Notice of Filing and Immediate Effectiveness of a Proposed Rule Change Related to AIM, SAM, FLEX AIM, FLEX SAM and FLEX Electronic RFQs

September 27, 2012.

Pursuant to Section 19(b)(1) of the Securities Exchange Act of 1934 (the ''Act''),[1] and Rule 19b–4 thereunder,[2] notice is hereby given that on September 21, 2012, Chicago Board Options Exchange, Incorporated (the ''Exchange'' or ''CBOE'') filed with the Securities and Exchange Commission (the ''Commission'') the proposed rule change as described in Items I, II and III below, which Items have been prepared by the Exchange. The Exchange has designated the proposal as a ''non-controversial'' proposed rule change pursuant to Section 19(b)(3)(A) of the Act [3] and Rule 19b–4(f)(6) thereunder.[4] The Commission is publishing this notice to solicit comments on the proposed rule change from interested persons.

I. Self-Regulatory Organization's Statement of the Terms of Substance of the Proposed Rule Change

The Exchange is proposing to make certain amendments to its rules for trading FLEX Options [5] and Non-FLEX

[1] 15 U.S.C. 78s(b)(1).

[2] 17 CFR 240.19b–4.

[3] 15 U.S.C. 78s(b)(3)(A).

[4] 17 CFR 240.19b–4(f)(6).

[5] FLEX Options provide investors with the ability to customize basic option features including size, expiration date, exercise style, and certain exercise prices. FLEX Options can be FLEX Index Options or FLEX Equity Options. In addition, other products are permitted to be traded pursuant to the FLEX trading procedures. For example, credit options are eligible for trading as FLEX Options pursuant to the FLEX rules in Chapters XXIVA and XXIVB. *See* CBOE Rules 24A.1(e) and (f), 24A.4(b)(1) and (c)(1), 24B.1(f) and (g), 24B.4(b)(1) and (c)(1), and 28.17. The rules governing the trading of FLEX Options on the FLEX Request for Quote (''RFQ'') System platform (which is limited to open outcry trading only) are contained in Chapter XXIVA. The rules governing the trading of FLEX Options on the FLEX

Options. The text of the proposed rule change is available on the Exchange's Web site (*www.cboe.org/Legal*), at the Exchange's Office of the Secretary, and at the Commission.

II. Self-Regulatory Organization's Statement of the Purpose of, and Statutory Basis for, the Proposed Rule Change

In its filing with the Commission, the Exchange included statements concerning the purpose of and basis for the proposed rule change and discussed any comments it received on the proposed rule change. The text of those statements may be examined at the places specified in Item IV below. The Exchange has prepared summaries, set forth in sections A, B, and C below, of the most significant parts of such statements.

A. Self-Regulatory Organization's Statement of the Purpose of, and Statutory Basis for, the Proposed Rule Change

1. Purpose

The Exchange recently received approval of a rule change filing, SR–CBOE–2011–123, which adopted certain rules pertaining to the electronic auction trading of FLEX Options on the Exchange's FLEX Hybrid Trading System platform.[6] In particular, the Exchange adopted rules to make modified versions of the Automated Improvement Mechanism (''AIM'') and the Solicitation Auction Mechanism (''SAM'')—which were already available for Non-FLEX Options under Rules 6.74A and 6.74B, respectively—available for FLEX Options under new Rules 24B.5A and 24B.5B, respectively. Under the FLEX AIM auction, a FLEX Trader that represents agency orders may electronically execute an order it represents as agency (an ''Agency Order'') against principal interest and/or against solicited orders provided it submits the Agency Order for execution into the AIM auction process. Under the FLEX SAM auction, a FLEX Trader that represents agency orders may electronically execute an Agency Order against solicited orders provided it submits the Agency Order for electronic execution into the SAM auction process, under which both the Agency Order and the solicited order will be designated in the FLEX Hybrid Trading System as all-or-none. Prior to launching the new FLEX AIM and FLEX SAM auctions, the Exchange is proposing to make certain changes detailed below to the FLEX auction trading rules, as well as corresponding changes to the Non-FLEX auction trading rules. The Exchange is also proposing certain other corresponding changes to various FLEX rules.

First, the existing FLEX AIM provisions in Rule 24B.5A(b)(1) provide in relevant part that auction responses cannot cross the Exchange's best bid or offer (''BBO'') on the opposite side of the market. The Exchange is proposing to amend these provisions to describe what the system does in the event a response does cross the market. In particular, the text will be amended to provide that a FLEX AIM auction response that crosses the BBO on the opposite side of the market will be capped at the BBO price. (For example, if the BBO is $1.00–$1.20 and a response is entered to sell at a price of $0.99, the response will be capped at a price of $1.00.) The existing FLEX SAM provisions in Rule 24B.5B(b)(1) are silent on what happens if an auction response crosses the BBO on the opposite side of the market; however, the FLEX SAM auction also operates in a fashion that is similar to the FLEX AIM auction. Therefore, the Exchange is proposing to amend these provisions to provide that a FLEX SAM auction response cannot cross the BBO on the opposite side of the market and a response that does cross the BBO on the opposite side of the market will be capped at the BBO price.

Second, currently the AIM, SAM, FLEX AIM, and FLEX SAM auctions each in relevant part provide that auction responses may be modified or canceled during the auction response period. The only way to modify a response would be for a Trading Permit Holder to cancel a prior response then submit a new response. As a result, the Exchange believes that the references to modifying responses in the rule text are unnecessary. Therefore, the Exchange is proposing to delete references to modifying responses in Rules 6.74A(b)(1), 6.74B(b)(1), 24B.5A(b)(1), and 24B.5B(b)(1), respectively. (The Exchange is also taking this opportunity to correct a numbering error in the text of Rule 24B.5A(b)(1) (changing a paragraph number from ''(ix)'' to ''(viii)'').)

Third, normally an auction would conclude after 1 second in the case of AIM and SAM, or after 3 seconds (or whatever longer period of time the Exchange may designate) in the case of FLEX AIM and FLEX SAM. In addition, respective AIM, SAM, FLEX AIM and FLEX SAM auction provisions set out various circumstances during which an auction would conclude early. Currently, the provisions are silent on what would happen in the event the option series is subject to a trading halt while an auction is ongoing. In such an event, the relevant auction would conclude early and the Agency Order would execute (or not execute) in accordance with the allocation provisions set out in the relevant rules. Therefore, the Exchange is proposing to amend Rules 6.74A(b)(2), 6.74B(b)(2), 24B.5A(b)(2) and 24B.5B(b)(2), respectively, to indicate that an auction would conclude early in the event of a trading halt in the series on the Exchange and the Agency Order would execute (or not execute) in accordance with the allocation provisions set out in the relevant rules.[7]

Fourth, the Exchange is proposing to make some clarifications regarding the application of certain provisions in the FLEX AIM and FLEX SAM auction rules to complex orders. The Exchange is also proposing to make similar clarifications to the FLEX electronic Request for Quote (''RFQ'') auction rules. By way of background, the existing FLEX AIM and FLEX SAM auctions each respectively provide in relevant part, for simple orders, that only one auction may be ongoing at any given time in a series and auctions in the same series may not queue or overlap in any manner. Further, unrelated FLEX Orders may not be submitted to the electronic book for the duration of an auction. For complex orders, the same conditions apply. In addition, certain other conditions also apply.[8] For instance, the complex order processing provisions currently provide that, in the event there are bids (offers) in any of the individual component series legs represented in the electronic book when an Agency Order is submitted to the auction, the auction will not commence. The complex order processing provisions also currently provide that, in the event an unrelated FLEX Order in any of the individual series legs is received during the

Hybrid Trading System platform (which combines both open outcry and electronic trading) are contained in Chapter XXIVB. The Exchange notes that, currently, all FLEX Options are traded on the FLEX Hybrid Trading System platform.

[6] Securities Exchange Act No. 66702 (March 30, 2012), 77 FR 20675 (April 5, 2012) (SR–CBOE–2011–123 Approval Order).

[7] The Exchange notes that NASDAQ OMX PHLX LLC (''Phlx'') has a similar provision within its electronic auction rules related to the early conclusion of an auction due to a trading halt. *See* Phlx Rule 1080(n).

[8] Complex orders are only eligible to trade with other complex orders through the FLEX AIM and FLEX SAM auctions. (As a result, to the extent the Exchange determines to make an electronic book available for resting FLEX Orders, there is no ''legging'' of complex orders with FLEX Orders that may be represented in the individual series legs represented in the electronic book.) Order allocation is the same as would be applicable for simple orders. *See* Rules 24B.5A.05 and 24B.5B.01.

duration of the auction response period, such FLEX Order will not be considered in the auction allocation. The Exchange believes this later provision is unnecessary and potentially confusing, since the rules also include a condition that unrelated FLEX Orders may not be submitted to the electronic book for the duration of an auction.

In order to provide more clarity on the application of these various provisions to complex orders, the Exchange is proposing to revise the FLEX AIM and FLEX SAM rules to further describe how these ''unrelated auction/order'' provisions apply to complex orders. In particular, the proposed revisions will make clear that only one FLEX AIM auction (or FLEX SAM auction, as applicable) may be ongoing at any given time for a given complex order strategy and FLEX AIM auctions (or FLEX SAM auctions, as applicable) involving any of the same individual series legs of the strategy may not queue or overlap in any manner. In the event there are bids (offers) in any of the individual component series legs represented in the electronic book when an Agency Order is submitted to the auction, the auction will not commence. In addition, unrelated FLEX Orders in any of the individual series legs may not be submitted to the electronic book for the duration of auction response period.[9]

The Exchange is also taking this opportunity to propose similar clarifications to the FLEX electronic RFQ process. In particular, the Exchange is proposing to amend the electronic RFQ provisions for simple orders to provide that only one electronic RFQ may be ongoing at any given time in a series and electronic RFQs in the same series may not queue or overlap in any manner. (The electronic RFQ provisions for simple orders are currently silent on the topic of multiple RFQs involving the same series.) The Exchange is also proposing to amend the electronic RFQ provisions for complex orders to make clear that only one electronic RFQ may be ongoing at any given time for a given complex order strategy and electronic RFQs involving any of the same individual series legs of the strategy may not queue or overlap in any manner. In the event there are bids (offers) in any of the individual component series legs represented in the electronic book when an electronic RFQ is submitted, the electronic RFQ will not commence. In addition, unrelated FLEX Orders in any of the individual series legs may not be submitted to the electronic book for the duration of electronic RFQ response period. (The Exchange is also taking this opportunity to correct a typographical error in the text (changing the phrase ''automated cancelled'' to ''automatically cancelled'').)

Fifth, the Exchange is proposing to make some changes to further describe the process for trading FLEX Options that have special exercise prices and premium terms based on a method for fixing such a number or based a percentage.[10] The Exchange is proposing to amend the FLEX Index Options provisions in Rules 24A.4(b)(2) and 24B.4(b)(2) to provide that exercise prices may be specified in terms of a percentage of the price of the underlying security at the time of the trade. This description of one particular method for fixing exercise prices for FLEX Index Options is parallel to an existing provision for FLEX Equity Options. The Exchange is proposing to amend the FLEX Index Options provisions to provide that premiums may be specified in terms of (i) a dollar amount, (ii) a method for fixing such a number at the time a FLEX Request for Quote or FLEX Order is traded, or (iii) a percentage of the index value calculated at the time of the trade or as of the close of trading on the Exchange on the trade date. This description of premium terms for FLEX Index Options is parallel to the existing terms for FLEX Equity Options.

In addition, the Exchange notes that, currently for FLEX Options, exercise prices and premiums that are stated using a percentage-based methodology (*e.g.,* an exercise price based on the percentage of the close of the underlying stock or a method for fixing the number based on the gross-weighted average of the underlying stock) may be stated in a percentage increment that is no smaller than 0.01%. The existing rules do not currently provide this level of detail, so the Exchange is proposing to include a description within the rules. In particular, the Exchange is proposing to amend the descriptions in Rules 24A.4(b)(2) and (c)(2) and 24B.4(b)(2) and (c)(2) to provide that exercise prices and premiums stated using a percentage-based methodology may be stated in a percentage increment determined by the Exchange on a class-by-class basis that may not be smaller than 0.01% and that the percentage increments will be rounded as provided within the rules. Corresponding changes are also being proposed to Rules 24A.5(f) and 24B.5(e), which pertain to incremental changes to bids and offers for FLEX Options trading via the electronic and open outcry RFQs, and to Rules 24B.5A(b)(1) and 24B.5B(a)(3), which pertain to incremental changes to bids and offers for FLEX Options trading via FLEX AIM and FLEX SAM.

The Exchange notes that the existing rules provide for FLEX Equity Options that exercise prices may be rounded to the nearest minimum tick or other decimal increment determined by the Exchange on a class-by-class basis that may not be smaller than $0.01, and that premiums will be rounded to the nearest minimum tick.[11] The existing rules are silent with respect to rounding for FLEX Index Option exercise prices. Therefore, as with FLEX Equity Options, the Exchange is proposing to provide that FLEX Index Option exercise prices may be rounded to the nearest minimum tick or other decimal increment determined by the Exchange on a class-by-class basis that may not be smaller than $0.01.

The Exchange is also proposing to adopt new Interpretation and Policy .02 to Rule 24B.5, which will provide that there is no electronic book for FLEX Options with exercise prices and premiums that are based on a methodology for fixing such a number or based on a percentage as provided in Rules 24B.2(b)(2) and 24B.2(c)(2). Similar to FLEX Option complex orders, these types of FLEX Options may only trade in open outcry or electronically

[9] In discussing the FLEX AIM and FLEX SAM auctions, the Exchange had previously indicated that the individual series legs of a complex order would not trade through equivalent bids (offers) in the individual series legs represented in the electronic book and at least one leg must better the corresponding bid (offer) of public customers and non-Trading Permit Holder broker-dealers in the electronic book. *See* Securities Exchange Act Release No. 66052 (December 23, 2011), 77 FR 306 (January 4, 2012) (SR–CBOE–2011–123 Proposal Notice). The Exchange notes that these scenarios would not occur when a complex order is traded via the FLEX AIM or FLEX SAM auction. Because the FLEX AIM and FLEX SAM auctions each include a condition that the auction is not permitted to commence when there is a FLEX Order resting in the electronic book in any individual component series legs and a condition that unrelated orders are not accepted for the duration of the auction, there would be no scenario where there would be a complex order traded in a FLEX AIM or FLEX SAM auction when there are corresponding bids (offers) in the electronic book.

[10] For FLEX Index Options, exercise prices shall be specified in terms of (i) a specific index value number, (ii) a method for fixing such a number at the time a FLEX Request for Quote or FLEX Order is traded, or (iii) a percentage of index value calculated as of the close of trading on the Exchange on the trade date. For FLEX Equity Options, exercise prices and premiums may be stated in (i) a dollar amount, (ii) a method for fixing such a number at the time a FLEX Request for Quote or FLEX Order is traded, or (iii) a percentage of the price of the underlying security at the time of the trade or as of the close of trading on the Exchange on the trade date. *See* existing Rules 24A.4(b)(2) and (c)(2) and 24B.4(b)(2) and (c)(2).

[11] In this regard, the Exchange notes that exercise price and premium values equal to or higher than 0.005 will be rounded up and less than 0.005 will be rounded down.

via one of the three electronic auction mechanisms, *i.e.,* the electronic RFQ process, FLEX AIM or FLEX SAM.

Sixth, the Exchange is also proposing to adopt new Interpretation and Policy .03 to Rule 24B.5 (pertaining to electronic RFQs), new Interpretation and Policy .06 to Rule 24B.5A (pertaining to FLEX AIM), and new Interpretation and Policy .02 to Rule 24B.5B (pertaining to FLEX SAM). These Interpretations and Policies will describe the post-trade verification procedures that apply to electronic RFQ, FLEX AIM and FLEX SAM transactions involving multi-part complex order strategies or exercise prices and premiums that are based on a methodology for fixing such a number or based on a percentage. By way of example, when a FLEX Option complex order is traded, the transaction execution is based on an overall net price and then, post-trade, the individual component series legs are reported at prices that equal the overall net price. As another example, when an exercise price is based on a percentage of the price of the underlying security as of the close of trading on the Exchange on the trade date, the transaction execution is based on the percentage formula and then, post-trade, the values are updated to reflect the actual exercise price after the closing price is available.

The rules currently do not describe the post-trade verification process for electronic trading, and the Exchange believes the additional detail may be helpful to market participants. The Exchange notes that the process for post-trade verification for electronic trades generally takes the manual process that has existed for open outcry transactions and adapts it to an electronic environment. The proposed Interpretations and Policies describe that the party that initiated the transaction shall input the applicable complex order leg price, exercise price and/or premium information into the FLEX Hybrid Trading System. Once the information is inputted into the System, the contra-party(ies) to the transaction shall then have a designated period of time to notify FLEX Officials of any inaccuracies in the content of a transaction and of the corrections to any inaccurate information, which designated period of time will be determined by the Exchange and will not be less than 5 minutes or more than 30 minutes from the time the initiating party inputs the information into the System. (Currently, the Exchange has set this period in the System at 10 minutes.)

Finally, seventh, the Exchange is proposing non-substantive changes to reorganize certain text within Rules 24B.5A and 24B.5B to be consistent with the format of other rules. Specifically, the Exchange is proposing to amend Rule 24B.5A to relocate the sentence ''This rule supersedes Exchange Rule 6.74A.'' to a location above Rule 24B.5A's Interpretations and Policies, and to amend Rule 24B.5B to relocate the sentence ''This rule supersedes Exchange Rule 6.74B.'' to a location above Rule 24B.5B's Interpretations and Policies. Again, these changes are not substantive. They are merely being made so the rules are formatted consistently with other rules contained in Chapter XXIVB.

2. Statutory Basis

The Exchange believes the proposed rule change is consistent with Section 6(b) of the Act [12] in general and furthers the objectives of Section 6(b)(5) of the Act [13] in particular in that it should promote just and equitable principles of trade, serve to remove impediments to and perfect the mechanism of a free and open market and a national market system, and protect investors and the public interest. In particular, the Exchange believes that the use of FLEX Options provides CBOE Trading Permit Holders and investors with additional tools to trade customized options in an exchange environment [14] and greater opportunities to manage risk. The Exchange believes that the FLEX AIM and FLEX SAM auctions adopted under rule change filing SR–CBOE–2011–123 should serve to further those objectives and encourage use of FLEX Options by making auctions mechanisms available for FLEX Options trading that are similar to auction mechanisms already available for Non-FLEX Options trading, which the Exchange believes should make the FLEX Hybrid Trading System more efficient and effective and easier for users to understand. The Exchange believes that the further refinements being proposed in this instant rule change filing, and corresponding changes to the AIM and SAM auctions for Non-FLEX Options, as well as similar changes to the FLEX electronic RFQ process, should also serve to further those objectives by more clearly and fully describing certain aspects of the operation of the FLEX Hybrid Trading System and of the aforementioned auction processes.

B. Self-Regulatory Organization's Statement on Burden on Competition

CBOE does not believe that the proposed rule change will impose any burden on competition that is not necessary or appropriate in furtherance of the purposes of the Act.

C. Self-Regulatory Organization's Statement on Comments on the Proposed Rule Change Received From Members, Participants, or Others

The Exchange neither solicited nor received comments on the proposal.

III. Date of Effectiveness of the Proposed Rule Change and Timing for Commission Action

Because the foregoing rule does not (i) Significantly affect the protection of investors or the public interest; (ii) impose any significant burden on competition; and (iii) become operative for 30 days from the date on which it was filed, or such shorter time as the Commission may designate if consistent with the protection of investors and the public interest, provided that the self-regulatory organization has given the Commission written notice of its intent to file the proposed rule change at least five business days prior to the date of filing of the proposed rule change or such shorter time as designated by the Commission, the proposed rule change has become effective pursuant to Section 19(b)(3)(A) of the Act [15] and Rule 19b–4(f)(6) thereunder.[16] At any time within 60 days of the filing of such proposed rule change, the Commission summarily may temporarily suspend such rule change if it appears to the Commission that such action is necessary or appropriate in the public interest, for the protection of investors, or otherwise in furtherance of the purposes of the Act.

IV. Solicitation of Comments

Interested persons are invited to submit written data, views, and arguments concerning the foregoing, including whether the proposed rule change is consistent with the Act.

[12] 15 U.S.C. 78f(b).

[13] 15 U.S.C. 78f(b)(5).

[14] FLEX Options provide Trading Permit Holders and investors with an improved but comparable alternative to the over-the-counter (''OTC'') market in customized options, which can take on contract characteristics similar to FLEX Options but are not subject to the same restrictions. The Exchange believes that making these changes will make the FLEX Hybrid Trading System an even more attractive alternative when market participants consider whether to execute their customized options in an exchange environment or in the OTC market. CBOE believes market participants benefit from being able to trade customized options in an exchange environment in several ways, including, but not limited to the following: (i) enhanced efficiency in initiating and closing out positions; (ii) increased market transparency; and (iii) heightened contra-party creditworthiness due to the role of The Options Clearing Corporation as issuer and guarantor of FLEX Options.

[15] 15 U.S.C. 78s(b)(3)(A).

[16] 17 CFR 240.19b–4(f)(6).

Comments may be submitted by any of the following methods:

Electronic Comments

- Use the Commission's Internet comment form (*http://www.sec.gov/rules/sro.shtml*); or
- Send an email to *rule-comments@sec.gov.* Please include File Number SR–CBOE–2012–093 on the subject line.

Paper Comments

- Send paper comments in triplicate to Elizabeth M. Murphy, Secretary, Securities and Exchange Commission, 100 F Street NE., Washington, DC 20549–1090.

All submissions should refer to File Number SR–CBOE–2012–093. This file number should be included on the subject line if email is used. To help the Commission process and review your comments more efficiently, please use only one method. The Commission will post all comments on the Commission's Internet Web site (*http://www.sec.gov/rules/sro.shtml*). Copies of the submission, all subsequent amendments, all written statements with respect to the proposed rule change that are filed with the Commission, and all written communications relating to the proposed rule change between the Commission and any person, other than those that may be withheld from the public in accordance with the provisions of 5 U.S.C. 552, will be available for Web site viewing and printing in the Commission's Public Reference Room, 100 F Street NE., Washington, DC 20549, on official business days between the hours of 10:00 a.m. and 3:00 p.m. Copies of the filing also will be available for inspection and copying at the principal office of the Exchange. All comments received will be posted without change; the Commission does not edit personal identifying information from submissions. You should submit only information that you wish to make available publicly. All submissions should refer to File Number SR–CBOE–2012–093 and should be submitted on or before October 24, 2012.

For the Commission, by the Division of Trading and Markets, pursuant to delegated authority.[17]

Kevin M. O'Neill,

Deputy Secretary.

[FR Doc. 2012–24289 Filed 10–2–12; 8:45 am]

BILLING CODE 8011–01–P

[17] 17 CFR 200.30–3(a)(12).

SECURITIES AND EXCHANGE COMMISSION

[Release No. 34–67941; File No. SR–EDGA–2012–43]

Self-Regulatory Organizations; EDGA Exchange, Inc.; Notice of Filing and Immediate Effectiveness of Proposed Rule Change Relating to Amendment to Rule 2.11

September 27, 2012.

Pursuant to Section 19(b)(1)[1] of the Securities Exchange Act of 1934 (the ''Act'')[2] and Rule 19b–4 thereunder,[3] notice is hereby given that on September 25, 2012, EDGA Exchange, Inc. (the ''Exchange'' or ''EDGA'') filed with the Securities and Exchange Commission (the ''Commission'') the proposed rule change as described in Items I and II below, which Items have been prepared by the self-regulatory organization. The Commission is publishing this notice to solicit comments on the proposed rule change from interested persons.

I. Self-Regulatory Organization's Statement of the Terms of Substance of the Proposed Rule Change

EDGA Exchange, Inc. (the ''Exchange'' or ''EDGA'') proposes to amend Rule 2.11(a)(7) to describe the circumstances under which the Exchange's routing broker-dealer, Direct Edge ECN LLC d/b/a DE Route (''DE Route''),[4] would be authorized to liquidate an error position resulting from one or more erroneous executions on the Exchange attributable to a systems, technical or operational issue (referred to herein as a ''Systems Issue'') experienced by the Exchange. The text of the proposed rule change is available on the Exchange's Web site at *www.directedge.com*, at the Exchange's principal office and at the Public Reference Room of the Commission.

II. Self-Regulatory Organization's Statement of the Purpose of, and Statutory Basis for, the Proposed Rule Change

In its filing with the Commission, the Exchange included statements concerning the purpose of, and basis for, the proposed rule change and discussed any comments it received on the proposed rule change. The text of these statements may be examined at the places specified in Item IV below. The self-regulatory organization has prepared summaries, set forth in Sections A, B and C below, of the most significant aspects of such statements.

A. Self-Regulatory Organization's Statement of the Purpose of, and Statutory Basis for, the Proposed Rule Change

1. Purpose

Background

DE Route is the approved Outbound Router[5] of EDGA, subject to the conditions contained in Rule 2.11. EDGA relies on DE Route to provide outbound routing services from EDGA to external market centers (each, a ''Trading Center''[6]). The Exchange has also been approved to receive inbound routes of equities orders by DE Route from EDGX Exchange, Inc. for a pilot period ending on June 30, 2013.[7]

In addition to the foregoing, DE Route, as well as the Exchange, is authorized under Rule 2.11(a)(6) to cancel orders when a Systems Issue occurs, and is authorized under Rule 2.11(a)(7), in connection with its role as an Outbound Router of EDGA, to maintain an error account for the purpose of liquidating an error position acquired as a result of a Systems Issue experienced either by DE Route, the Exchange or a Trading Center to which DE Route directed an outbound order.[8] In this regard, DE Route may only assume such a position in the error account under documented circumstances when such position could not fairly and practicably be assigned to one or more Members in its entirety.[9]

[1] 15 U.S.C.78s(b)(1).

[2] 15 U.S.C. 78a.

[3] 17 CFR 240.19b–4.

[4] DE Route is a facility of the Exchange. Accordingly, under Exchange Rule 2.11(a)(1), the Exchange is responsible for filing with the Securities and Exchange Commission (the ''Commission'') rule changes and fees relating to DE Route's outbound router function, and its authorized functions are limited to those enumerated in Rule 2.11(a)(4).

[5] As defined in EDGA Rule 2.11(a). *See also* Securities Exchange Act Release No. 61698 (March 12, 2010), 75 FR 13151 (March 18, 2010) (order approving the registration of EDGA as a national securities exchange).

[6] As defined in EDGA Rule 2.11(a) and Rule 600(b)(78) of Regulation NMS under the Securities Exchange Act of 1934 (the ''Act''), 17 CFR 242.600(b)(78).

[7] *See* Securities Exchange Act Release No. 66643 (March 22, 2012), 77 FR 18876 (March 28, 2012) (SR–EDGA–2012–10) (extending the pilot period of the Inbound Router as described in EDGA Rule 2.12(b) through June 30, 2013). *See also* Securities Exchange Act Release No. 64362 (April 28, 2011), 76 FR 25386 (May 4, 2011) (SR–EDGA–2011–13) (extending the pilot period through June 30, 2012).

[8] *See* Securities Exchange Act Release No. 67011 (May 17, 2012), 77 FR 30562 (May 23, 2012) (SR–EDGA–2012–09) (order approving amendments to Rule 2.11 that establish the Exchange's and DE Route's authority to cancel orders and describe the operation of an error account).

[9] *See* EDGA Rule 2.11(a)(7). *See also, supra* note 8 for a description of the requirements applicable to DE Route relating, among other things, to: (i) Determining whether an error position can be fairly and practicably assigned to one or more Members in its entirety; and (ii) the manner in which an error

Proposed Amendment to Exchange Rule 2.11(a)(7)

The Exchange is now proposing to amend Rule 2.11(a)(7) to describe the circumstances under which DE Route would be authorized to use the error account to liquidate an error position resulting from an erroneous execution on the Exchange that was attributable to a Systems Issue, and not just an error position acquired in connection with its role as Outbound Router. In this regard, the proposed rule change would specify that an error position would not include any position that resulted from an order submitted by a Member to EDGA that was executed on EDGA and automatically processed for clearance and settlement on a locked-in basis. DE Route would not be permitted to: (i) Accept a position in the error account from a Member's account; or (ii) permit any Member to transfer any position from the Member's account to the error account. In other words, DE Route would not be permitted to accept from a Member a position that was delivered to the Member through the clearance and settlement process, even if such position may have been related to a Systems Issue on EDGA. If a Member received a locked-in position in connection with a Systems Issue and experienced a loss in unwinding such position, that Member would be able to seek reimbursement from the Exchange in accordance with, and subject to the limitations of, Exchange Rule 11.12(d), which provides Members with the ability to file claims against the Exchange ''for losses resulting directly from the malfunction of the Exchange's physical equipment, devices and/or programming or the negligent acts or omissions of its employees.'' If, however, a Systems Issue resulted in the Exchange not having valid clearing instructions for a Member to a trade, DE Route would be permitted to assume that Member's side of the trade so that the trade could be automatically processed for clearance and settlement on a locked-in basis.

In the addition to the foregoing, the Exchange proposes to amend Rule 2.11(a)(7) to clarify that either the Exchange or DE Route, or both, are authorized to make a determination as to whether an error position can be fairly and practicably assigned to one or more Members, or alternatively, to make a determination as to whether an error position shall be acquired in DE Route's error account to be liquidated, in either case in accordance with the provisions of Rule 2.11(a)(7).

Circumstances That Could Lead to an Error Position

An error position may result from a Systems Issue at the Exchange that does not involve routing of orders through DE Route. For example, a situation may arise in which a posted quote/order validly cancelled by the System [10] erroneously matched that quote/order with an order that was seeking to access it. In such a situation, DE Route would have to assume that side of the trade opposite the order seeking to access the cancelled quote/order. DE Route would post the position in its error account and resolve the position in the manner described in Rule 2.11(a)(7).

An error position may also result from a Systems Issue whereby the Exchange does not receive sufficient notice that a Member that has executed trades on the Exchange has lost the ability to clear trades through The Depository Trust Clearing Corporation. In such a situation, the Exchange would not have valid clearing information, which would prevent the trade from being automatically processed for clearance and settlement on a locked-in basis. Accordingly, DE Route would assume that Member's side of the trade so that the counterparty could the settle the trade. DE Route would post such an error position into its error account and resolve the position in the manner described in Rule 2.11(a)(7).

The Exchange notes that this discussion of potential scenarios that could lead to an error position is for illustrative purposes only and is not intended to be an exhaustive list of all scenarios.

2. Statutory Basis

The Exchange believes that the proposed rule change is consistent with Section 6(b) of the Act [11] and furthers the objectives of Section 6(b)(5) of the Act,[12] in that it is designed to prevent fraudulent and manipulative acts and practices, to promote just and equitable principles of trade, to foster cooperation and coordination with persons engaged in facilitating transactions in securities, and to remove impediments to and perfect the mechanisms of a free and open market and a national market system, and, in general, to protect investors and the public interest. Moreover, the Exchange believes that the proposed rule change is not designed to permit unfair discrimination between customers, issuers, brokers or dealers.

Similar to the Exchange's previous proposal to authorize DE Route to maintain an error account for the purpose of addressing and resolving an error position acquired in connection with its role as an Outbound Router,[13] the Exchange continues to believe that allowing DE Route to assume an error position in the error account, and to liquidate such position in accordance with the conditions set forth in Rule 2.11(a)(7), is the least disruptive means to resolve an error position, except where it is fair and practicable for DE Route to assign the entire amount of such error position to one or more Members of the Exchange; ensures full trade certainty for market participants; and avoids disrupting the clearance and settlement process. The proposed amendment to Rule 2.11(a)(7) would extend these principles to circumstances where an error position resulted from one or more erroneous executions on the Exchange due to a Systems Issue experienced by the Exchange, and not solely under circumstances where DE Route was acting as the Exchange's Outbound Router. Thus, regardless whether the error position resulted from an execution on the Exchange or at a Trading Center,[14] Rule 2.11(a)(7) would continue to provide a consistent methodology for handling such error position in a manner that did not discriminate among Members, and would continue to require DE Route to establish controls reasonably designed to restrict the flow of any confidential information associated with the liquidation of an error position.

B. Self-Regulatory Organization's Statement on Burden on Competition

The proposed rule change does not impose any burden on competition that is not necessary or appropriate in furtherance of the purposes of the Act.

C. Self-Regulatory Organization's Statement on Comments on the Proposed Rule Change Received From Members, Participants, or Others

The Exchange has not solicited, and does not intend to solicit, comments on this proposed rule change. The Exchange has not received any unsolicited written comments from members or other interested parties.

position acquired in the error account shall be liquidated.

[10] As defined in EDGA Rule 1.5(cc).

[11] 15 U.S.C. 78f(b).

[12] 15 U.S.C. 78f(b)(5).

[13] *See supra* note 8, at 11 [sic].

[14] As defined in EDGA Rule 2.11(a).

III. Date of Effectiveness of the Proposed Rule Change and Timing for Commission Action

Because the foregoing proposed rule change does not: (i) Significantly affect the protection of investors or the public interest; (ii) impose any significant burden on competition; and (iii) become operative for 30 days after the date of the filing, or such shorter time as the Commission may designate, it has become effective pursuant to Section 19(b)(3)(A) of the Act [15] and Rule 19b–4(f)(6) [16] thereunder.

At any time within 60 days of the filing of the proposed rule change, the Commission summarily may temporarily suspend such rule change if it appears to the Commission that such action is necessary or appropriate in the public interest, for the protection of investors, or otherwise in furtherance of the purposes of the Act. If the Commission takes such action, the Commission shall institute proceedings to determine whether the proposed rule should be approved or disapproved.

IV. Solicitation of Comments

Interested persons are invited to submit written data, views, and arguments concerning the foregoing, including whether the proposed rule change is consistent with the Act. Comments may be submitted by any of the following methods:

Electronic Comments

- Use the Commission's Internet comment form (*http://www.sec.gov/rules/sro.shtml*); or
- Send an email to *rule-comments@sec.gov*. Please include File Number SR–EDGA–2012–43 on the subject line.

Paper Comments

- Send paper comments in triplicate to Elizabeth M. Murphy, Secretary, Securities and Exchange Commission, 100 F Street NE., Washington, DC 20549–1090.

All submissions should refer to File Number SR–EDGA–2012–43. This file number should be included on the subject line if email is used. To help the Commission process and review your comments more efficiently, please use only one method. The Commission will post all comments on the Commission's Internet Web site (*http://www.sec.gov/rules/sro.shtml*). Copies of the submission, all subsequent amendments, all written statements with respect to the proposed rule change that are filed with the Commission, and all written communications relating to the proposed rule change between the Commission and any person, other than those that may be withheld from the public in accordance with the provisions of 5 U.S.C. 552, will be available for Web site viewing and printing in the Commission's Public Reference Room, 100 F Street NE., Washington, DC 20549, on official business days between the hours of 10 a.m. and 3 p.m. Copies of the filing also will be available for inspection and copying at the principal office of the Exchange. All comments received will be posted without change; the Commission does not edit personal identifying information from submissions. You should submit only information that you wish to make available publicly. All submissions should refer to File Number SR–EDGA–2012–43 and should be submitted on or before October 24, 2012.

For the Commission, by the Division of Trading and Markets, pursuant to delegated authority.[17]

Kevin M. O'Neill,

Deputy Secretary.

[FR Doc. 2012–24291 Filed 10–2–12; 8:45 am]

BILLING CODE 8011–01–P

[15] 15 U.S.C. 78s(b)(3)(A).

[16] 17 CFR 240.19b–4(f)(6). In addition, Rule 19b–4(f)(6) requires a self-regulatory organization to give the Commission written notice of its intent to file the proposed rule change at least five business days prior to the date of filing of the proposed rule change, or such shorter time as designated by the Commission. The Exchange has satisfied this requirement.

[17] 17 CFR 200.30–3(a)(12).

SECURITIES AND EXCHANGE COMMISSION

[Release No. 34–67942; File No. SR–EDGX–2012–43]

Self-Regulatory Organizations; EDGX Exchange, Inc.; Notice of Filing and Immediate Effectiveness of Proposed Rule Change Relating to Amendment to Rule 2.11

September 27, 2012.

Pursuant to Section 19(b)(1) [1] of the Securities Exchange Act of 1934 (the ''Act'') [2] and Rule 19b–4 thereunder,[3] notice is hereby given that on September 25, 2012, EDGX Exchange, Inc. (the ''Exchange'' or ''EDGX'') filed with the Securities and Exchange Commission (the ''Commission'') the proposed rule change as described in Items I and II below, which Items have been prepared by the self-regulatory organization. The Commission is publishing this notice to solicit comments on the proposed rule change from interested persons.

I. Self-Regulatory Organization's Statement of the Terms of Substance of the Proposed Rule Change

EDGX Exchange, Inc. (the ''Exchange'' or ''EDGX'') proposes to amend Rule 2.11(a)(7) to describe the circumstances under which the Exchange's routing broker-dealer, Direct Edge ECN LLC d/b/a DE Route (''DE Route''),[4] would be authorized to liquidate an error position resulting from one or more erroneous executions on the Exchange attributable to a systems, technical or operational issue (referred to herein as a ''Systems Issue'') experienced by the Exchange. The text of the proposed rule change is available on the Exchange's Web site at *www.directedge.com*, at the Exchange's principal office and at the Public Reference Room of the Commission.

II. Self-Regulatory Organization's Statement of the Purpose of, and Statutory Basis for, the Proposed Rule Change

In its filing with the Commission, the Exchange included statements concerning the purpose of, and basis for, the proposed rule change and discussed any comments it received on the proposed rule change. The text of these statements may be examined at the places specified in Item IV below. The self-regulatory organization has prepared summaries, set forth in Sections A, B and C below, of the most significant aspects of such statements.

A. Self-Regulatory Organization's Statement of the Purpose of, and Statutory Basis for, the Proposed Rule Change

1. Purpose

Background

DE Route is the approved Outbound Router [5] of EDGX, subject to the conditions contained in Rule 2.11. EDGX relies on DE Route to provide outbound routing services from EDGX to external market centers (each, a ''Trading Center'' [6]). The Exchange has

[1] 15 U.S.C. 78s(b)(1).

[2] 15 U.S.C. 78a.

[3] 17 CFR 240.19b–4.

[4] DE Route is a facility of the Exchange. Accordingly, under Exchange Rule 2.11(a)(1), the Exchange is responsible for filing with the Securities and Exchange Commission (the ''Commission'') rule changes and fees relating to DE Route's outbound router function, and its authorized functions are limited to those enumerated in Rule 2.11(a)(4).

[5] As defined in EDGX Rule 2.11(a). *See also,* Securities Exchange Act Release No. 61698 (March 12, 2010), 75 FR 13151 (March 18, 2010) (order approving the registration of EDGX as a national securities exchange).

[6] As defined in EDGX Rule 2.11(a) and Rule 600(b)(78) of Regulation NMS under the Securities

also been approved to receive inbound routes of equities orders by DE Route from EDGA Exchange, Inc. for a pilot period ending on June 30, 2013.[7]

In addition to the foregoing, DE Route, as well as the Exchange, is authorized under Rule 2.11(a)(6) to cancel orders when a Systems Issue occurs, and is authorized under Rule 2.11(a)(7), in connection with its role as an Outbound Router of EDGX, to maintain an error account for the purpose of liquidating an error position acquired as a result of a Systems Issue experienced either by DE Route, the Exchange or a Trading Center to which DE Route directed an outbound order.[8] In this regard, DE Route may only assume such a position in the error account under documented circumstances when such position could not fairly and practicably be assigned to one or more Members in its entirety.[9]

Proposed Amendment to Exchange Rule 2.11(a)(7)

The Exchange is now proposing to amend Rule 2.11(a)(7) to describe the circumstances under which DE Route would be authorized to use the error account to liquidate an error position resulting from an erroneous execution on the Exchange that was attributable to a Systems Issue, and not just an error position acquired in connection with its role as Outbound Router. In this regard, the proposed rule change would specify that an error position would not include any position that resulted from an order submitted by a Member to EDGX that was executed on EDGX and automatically processed for clearance and settlement on a locked-in basis. DE Route would not be permitted to: (i) accept a position in the error account from a Member's account; or (ii) permit any Member to transfer any position from the Member's account to the error account. In other words, DE Route would not be permitted to accept from a Member a position that was delivered to the Member through the clearance and settlement process, even if such position may have been related to a Systems Issue on EDGX. If a Member received a locked-in position in connection with a Systems Issue and experienced a loss in unwinding such position, that Member would be able to seek reimbursement from the Exchange in accordance with, and subject to the limitations of, Exchange Rule 11.12(d), which provides Members with the ability to file claims against the Exchange ''for losses resulting directly from the malfunction of the Exchange's physical equipment, devices and/or programming or the negligent acts or omissions of its employees.'' If, however, a Systems Issue resulted in the Exchange not having valid clearing instructions for a Member to a trade, DE Route would be permitted to assume that Member's side of the trade so that the trade could be automatically processed for clearance and settlement on a locked-in basis.

In the addition to the foregoing, the Exchange proposes to amend Rule 2.11(a)(7) to clarify that either the Exchange or DE Route, or both, are authorized to make a determination as to whether an error position can be fairly and practicably assigned to one or more Members, or alternatively, to make a determination as to whether an error position shall be acquired in DE Route's error account to be liquidated, in either case in accordance with the provisions of Rule 2.11(a)(7).

Circumstances That Could Lead to an Error Position

An error position may result from a Systems Issue at the Exchange that does not involve routing of orders through DE Route. For example, a situation may arise in which a posted quote/order validly cancelled by the System[10] erroneously matched that quote/order with an order that was seeking to access it. In such a situation, DE Route would have to assume that side of the trade opposite the order seeking to access the cancelled quote/order. DE Route would post the position in its error account and resolve the position in the manner described in Rule 2.11(a)(7).

An error position may also result from a Systems Issue whereby the Exchange does not receive sufficient notice that a Member that has executed trades on the Exchange has lost the ability to clear trades through The Depository Trust Clearing Corporation. In such a situation, the Exchange would not have valid clearing information, which would prevent the trade from being automatically processed for clearance and settlement on a locked-in basis. Accordingly, DE Route would assume that Member's side of the trade so that the counterparty could the settle the trade. DE Route would post such an error position into its error account and resolve the position in the manner described in Rule 2.11(a)(7).

The Exchange notes that this discussion of potential scenarios that could lead to an error position is for illustrative purposes only and is not intended to be an exhaustive list of all scenarios.

2. Statutory Basis

The Exchange believes that the proposed rule change is consistent with Section 6(b) of the Act[11] and furthers the objectives of Section 6(b)(5) of the Act,[12] in that it is designed to prevent fraudulent and manipulative acts and practices, to promote just and equitable principles of trade, to foster cooperation and coordination with persons engaged in facilitating transactions in securities, and to remove impediments to and perfect the mechanisms of a free and open market and a national market system, and, in general, to protect investors and the public interest. Moreover, the Exchange believes that the proposed rule change is not designed to permit unfair discrimination between customers, issuers, brokers or dealers.

Similar to the Exchange's previous proposal to authorize DE Route to maintain an error account for the purpose of addressing and resolving an error position acquired in connection with its role as an Outbound Router,[13] the Exchange continues to believe that allowing DE Route to assume an error position in the error account, and to liquidate such position in accordance with the conditions set forth in Rule 2.11(a)(7), is the least disruptive means to resolve an error position, except where it is fair and practicable for DE Route to assign the entire amount of such error position to one or more Members of the Exchange; ensures full trade certainty for market participants; and avoids disrupting the clearance and settlement process. The proposed amendment to Rule 2.11(a)(7) would extend these principles to circumstances where an error position resulted from one or more erroneous executions on the Exchange due to a

Exchange Act of 1934 (the ''Act''), 17 CFR 242.600(b)(78).

[7] *See* Securities Exchange Act Release No. 66644 (March 22, 2012), 77 FR 18877 (March 28, 2012) (SR–EDGX–2012–09) (extending the pilot period of the Inbound Router as described in EDGX Rule 2.12(b) through June 30, 2013). *See also* Securities Exchange Act Release No. 64361 (April 28, 2011), 76 FR 25388 (May 4, 2011) (SR–EDGX–2011–12) (extending the pilot period through June 30, 2012).

[8] *See* Securities Exchange Act Release No. 67010 (May 17, 2012), 77 FR 30564 (May 23, 2012) (SR–EDGX–2012–08) (order approving amendments to Rule 2.11 that establish the Exchange's and DE Route's authority to cancel orders and describe the operation of an error account).

[9] *See* EDGX Rule 2.11(a)(7). *See also, supra* note 8 for a description of the requirements applicable to DE Route relating, among other things, to: (i) Determining whether an error position can be fairly and practicably assigned to one or more Members in its entirety; and (ii) the manner in which an error position acquired in the error account shall be liquidated.

[10] As defined in EDGX Rule 1.5(cc).

[11] 15 U.S.C. 78f(b).

[12] 15 U.S.C. 78f(b)(5).

[13] *See supra* note 8, at 11 [sic].

Systems Issue experienced by the Exchange, and not solely under circumstances where DE Route was acting as the Exchange's Outbound Router. Thus, regardless whether the error position resulted from an execution on the Exchange or at a Trading Center,[14] Rule 2.11(a)(7) would continue to provide a consistent methodology for handling such error position in a manner that did not discriminate among Members, and would continue to require DE Route to establish controls reasonably designed to restrict the flow of any confidential information associated with the liquidation of an error position.

B. Self-Regulatory Organization's Statement on Burden on Competition

The proposed rule change does not impose any burden on competition that is not necessary or appropriate in furtherance of the purposes of the Act.

C. Self-Regulatory Organization's Statement on Comments on the Proposed Rule Change Received From Members, Participants, or Others

The Exchange has not solicited, and does not intend to solicit, comments on this proposed rule change. The Exchange has not received any unsolicited written comments from members or other interested parties.

III. Date of Effectiveness of the Proposed Rule Change and Timing for Commission Action

Because the foregoing proposed rule change does not: (i) Significantly affect the protection of investors or the public interest; (ii) impose any significant burden on competition; and (iii) become operative for 30 days after the date of the filing, or such shorter time as the Commission may designate, it has become effective pursuant to Section 19(b)(3)(A) of the Act [15] and Rule 19b–4(f)(6) [16] thereunder.

At any time within 60 days of the filing of the proposed rule change, the Commission summarily may temporarily suspend such rule change if it appears to the Commission that such action is necessary or appropriate in the public interest, for the protection of investors, or otherwise in furtherance of the purposes of the Act. If the Commission takes such action, the Commission shall institute proceedings to determine whether the proposed rule should be approved or disapproved.

IV. Solicitation of Comments

Interested persons are invited to submit written data, views, and arguments concerning the foregoing, including whether the proposed rule change is consistent with the Act. Comments may be submitted by any of the following methods:

Electronic Comments

- Use the Commission's Internet comment form (*http://www.sec.gov/rules/sro.shtml*); or
- Send an email to *rule-comments@sec.gov*. Please include File Number SR–EDGX–2012–43 on the subject line.

Paper Comments

- Send paper comments in triplicate to Elizabeth M. Murphy, Secretary, Securities and Exchange Commission, 100 F Street NE., Washington, DC 20549–1090.

All submissions should refer to File Number SR–EDGX–2012–43. This file number should be included on the subject line if email is used. To help the Commission process and review your comments more efficiently, please use only one method. The Commission will post all comments on the Commission's Internet Web site (*http://www.sec.gov/rules/sro.shtml*). Copies of the submission, all subsequent amendments, all written statements with respect to the proposed rule change that are filed with the Commission, and all written communications relating to the proposed rule change between the Commission and any person, other than those that may be withheld from the public in accordance with the provisions of 5 U.S.C. 552, will be available for Web site viewing and printing in the Commission's Public Reference Room, 100 F Street NE., Washington, DC 20549, on official business days between the hours of 10 a.m. and 3 p.m. Copies of the filing also will be available for inspection and copying at the principal office of the Exchange. All comments received will be posted without change; the Commission does not edit personal identifying information from submissions. You should submit only information that you wish to make available publicly. All submissions should refer to File Number SR–EDGX–2012–43 and should be submitted on or before October 24, 2012.

For the Commission, by the Division of Trading and Markets, pursuant to delegated authority.[17]

Kevin M. O'Neill,

Deputy Secretary.

[FR Doc. 2012–24292 Filed 10–2–12; 8:45 am]

BILLING CODE 8011–01–P

[14] As defined in EDGX Rule 2.11(a).

[15] 15 U.S.C. 78s(b)(3)(A).

[16] 17 CFR 240.19b–4(f)(6). In addition, Rule 19b–4(f)(6) requires a self-regulatory organization to give the Commission written notice of its intent to file the proposed rule change at least five business days prior to the date of filing of the proposed rule change, or such shorter time as designated by the Commission. The Exchange has satisfied this requirement.

[17] 17 CFR 200.30–3(a)(12).

SECURITIES AND EXCHANGE COMMISSION

[Release No. 34–67939; File No. SR–C2–2012–033]

Self-Regulatory Organizations; C2 Options Exchange, Incorporated; Notice of Filing and Immediate Effectiveness of a Proposed Rule Change To Extend the P.M.-Settled S&P 500 Index Option Product Pilot Program

September 27, 2012.

Pursuant to Section 19(b)(1) of the Securities Exchange Act of 1934 (the ''Act''),[1] and Rule 19b–4 thereunder,[2] notice is hereby given that on September 19, 2012, C2 Options Exchange, Incorporated (the ''Exchange'' or ''C2'') filed with the Securities and Exchange Commission (the ''Commission'') the proposed rule change as described in Items I and II, below, which Items have been prepared by the Exchange. The Commission is publishing this notice to solicit comments on the proposed rule change from interested persons.

I. Self-Regulatory Organization's Statement of the Terms of Substance of the Proposed Rule Change

The Exchange proposes to extend a pilot program. The text of the proposed rule change is available on the Exchange's Web site (*http://www.c2exchange.com/Legal/*), at the Commission's Web site (*http://www.sec.gov*), at the Exchange's Office of the Secretary, and at the Commission's Public Reference Room.

II. Self-Regulatory Organization's Statement of the Purpose of, and Statutory Basis for, the Proposed Rule Change

In its filing with the Commission, the Exchange included statements concerning the purpose of and basis for the proposed rule change and discussed any comments it received on the proposed rule change. The text of these statements may be examined at the places specified in Item IV below. The Exchange has prepared summaries, set

[1] 15 U.S.C. 78s(b)(1).

[2] 17 CFR 240.19b–4.

forth in sections A, B, and C below, of the most significant aspects of such statements.

A. Self-Regulatory Organization's Statement of the Purpose of, and the Statutory Basis for, the Proposed Rule Change

1. Purpose

On September 2, 2011, the Commission approved, on a pilot basis, the Exchange's proposal to list and trade p.m.-settled, cash-settled S&P 500 index options with third-Friday-of-the-month expiration dates (''Expiration Friday'') for which the exercise settlement value was to be based on the index value derived from the closing prices of component securities, for an initial period of fourteen months (the ''Pilot Program'').[3] The proposed contract (referred to as ''SPXPM'') is traded using a $100 multiplier, and the minimum trading increment is $0.05 for options trading below $3.00 and $0.10 for all other series. Strike price intervals are set no less than 5 points apart. Consistent with existing rules for index options, the Exchange has allowed up to twelve near-term expiration months, as well as LEAPS. Expiration processing has occurred on the Saturday following Expiration Friday. The product has European-style exercise and is not subject to position limits, though there are enhanced reporting requirements. All of these specifications are in accordance with those described in the Approving Release.

As part of the Pilot Program, the Exchange committed to submit a pilot program report to the Commission at least two months prior to the expiration date of the Pilot Program (the ''Annual Report''), as well as periodic interim reports. The Exchange recently submitted this Annual Report, which contains an analysis of volume, open interest, and trading patterns. The analysis examines trading in the proposed option product as well as trading in the securities that comprise the S&P 500 index. In addition to the Annual Report, the Exchange has provided the Commission with periodic interim reports while the Pilot Program has been in effect.

In trading SPXPM according to the specifications described above, and submitting the Annual Report as well as periodic interim reports regarding the Pilot Program, the Exchange has complied with the requirements of the Approving Release. During the Pilot Program, the Exchange experienced no problems with or issues regarding the trading of SPXPM. Further, SPXPM has been a popular product among investors, and the Exchange expects it to continue to be a valuable offering for investors.

The initial period for the Pilot Program is scheduled to conclude on November 2, 2012.[4] The Exchange hereby proposes to extend the duration of this Pilot Program for one year, until November 2, 2013. Extending the Pilot Program by one year will give the Commission more time to consider the impact of the Pilot Program. The Exchange will continue to submit to the Commission annual and interim reports pursuant to the requirements provided in the Approving Release. In addition to these requirements, the Exchange will provide an analysis of the distribution of trade sizes for SPX in the Annual Report, and will work with the Commission in providing additional data, as needed, to evaluate the Pilot Program.

2. Statutory Basis

The Exchange believes the proposed rule change is consistent with the Act and the rules and regulations thereunder applicable to the Exchange and, in particular, the requirements of Section 6(b) of the Act.[5] Specifically, the Exchange believes the proposed rule change is consistent with the Section 6(b)(5)[6] requirements that the rules of an exchange be designed to promote just and equitable principles of trade, to prevent fraudulent and manipulative acts, to remove impediments to and to perfect the mechanism for a free and open market and a national market system, and, in general, to protect investors and the public interest.

The Exchange believes that the trading of SPXPM in the manner in which it has been traded, and would continue to be traded, under the Pilot Program has not and does not raise any meaningful regulatory concerns. Further, the Exchange believes that such trading has not, and will not adversely impact fair and orderly markets on Expiration Fridays for the underlying stocks comprising the S&P 500 index. Additionally, the trading of SPXPM provides investors with additional opportunities to trade S&P 500 options with a p.m.-settlement feature in an exchange environment and subject to transparent exchange-based rules. The Exchange also believes that investors benefit from the opportunity to trade in association with this product on Expiration Fridays, thereby removing impediments to a free and open market consistent with the Act.

B. Self-Regulatory Organization's Statement on Burden on Competition

C2 does not believe that the proposed rule change will impose any burden on competition that is not necessary or appropriate in furtherance of the purposes of the Act.

C. Self-Regulatory Organization's Statement on Comments on the Proposed Rule Change Received From Members, Participants, or Others

The Exchange neither solicited nor received comments on the proposed rule change.

III. Date of Effectiveness of the Proposed Rule Change and Timing for Commission Action

Because the foregoing proposed rule change does not: (i) Significantly affect the protection of investors or the public interest; (ii) impose any significant burden on competition; and (iii) become operative for 30 days after the date of the filing, or such shorter time as the Commission may designate, it has become effective pursuant to 19(b)(3)(A) of the Act[7] and Rule 19b–4(f)(6)[8] thereunder.

At any time within 60 days of the filing of the proposed rule change, the Commission summarily may temporarily suspend such rule change if it appears to the Commission that such action is necessary or appropriate in the public interest, for the protection of investors, or otherwise in furtherance of the purposes of the Act.

IV. Solicitation of Comments

Interested persons are invited to submit written data, views, and arguments concerning the foregoing, including whether the proposed rule change is consistent with the Act. Comments may be submitted by any of the following methods:

[3] *See* Securities Exchange Act Release No. 65256 (September 2, 2011), 76 FR 55969 (September 9, 2011) (SR–C2–2011–008) (the ''Approving Release''). *See also* Securities Exchange Act Release No. 65521 (October 7, 2011), 76 FR 63973 (October 14, 2011) (SR–C2–2011–029), which inserted ''November 2, 2012'' (fourteen months after September 2, 2011) as the conclusion date for this initial period of the Pilot Program.

[4] *See* Securities Exchange Act Release No. 65521 (October 7, 2011), 76 FR 63973 (October 14, 2011) (SR–C2–2011–029).

[5] 15 U.S.C. 78f(b).

[6] 15 U.S.C. 78f(b)(5).

[7] 15 U.S.C. 78s(b)(3)(A).

[8] 17 CFR 240.19b–4(f)(6). In addition, Rule 19b–4(f)(6) requires a self-regulatory organization to give the Commission written notice of its intent to file the proposed rule change at least five business days prior to the date of filing of the proposed rule change, or such shorter time as designated by the Commission. The Exchange has satisfied this requirement.

Electronic Comments

- Use the Commission's Internet comment form (*http://www.sec.gov/rules/sro.shtml*); or
- Send an email to *rule-comments@sec.gov.* Please include File No. SR–C2–2012–033 on the subject line.

Paper Comments

- Send paper comments in triplicate to Elizabeth M. Murphy, Secretary, Securities and Exchange Commission, 100 F Street NE., Washington, DC 20549–1090.

All submissions should refer to File No. SR–C2–2012–033. This file number should be included on the subject line if email is used. To help the Commission process and review your comments more efficiently, please use only one method. The Commission will post all comments on the Commission's Web site (*http://www.sec.gov/rules/sro.shtml*). Copies of the submission, all subsequent amendments, all written statements with respect to the proposed rule change that are filed with the Commission, and all written communications relating to the proposed rule change between the Commission and any person, other than those that may be withheld from the public in accordance with the provisions of 5 U.S.C. 552, will be available for Web site viewing and printing in the Commission's Public Reference Room, 100 F Street NE., Washington, DC 20549, on official business days between the hours of 10 a.m. and 3 p.m. Copies of such filing also will be available for inspection and copying at the principal office of C2. All comments received will be posted without change; the Commission does not edit personal identifying information from submissions. You should submit only information that you wish to make available publicly. All submissions should refer to File No. SR–C2–2012–033 and should be submitted on or before October 24, 2012.

For the Commission, by the Division of Trading and Markets, pursuant to delegated authority.[9]

Kevin M. O'Neill,

Deputy Secretary.

[FR Doc. 2012–24290 Filed 10–2–12; 8:45 am]

BILLING CODE 8011–01–P

[9] 17 CFR 200.30–3(a)(12).

DEPARTMENT OF STATE

[Public Notice 8051]

Culturally Significant Objects Imported for Exhibition Determinations: ''Light and Shadows: The Story of Iranian Jews''

SUMMARY: Notice is hereby given of the following determinations: Pursuant to the authority vested in me by the Act of October 19, 1965 (79 Stat. 985; 22 U.S.C. 2459), Executive Order 12047 of March 27, 1978, the Foreign Affairs Reform and Restructuring Act of 1998 (112 Stat. 2681, *et seq.;* 22 U.S.C. 6501 note, *et seq.*), Delegation of Authority No. 234 of October 1, 1999, Delegation of Authority No. 236–3 of August 28, 2000 (and, as appropriate, Delegation of Authority No. 257 of April 15, 2003), I hereby determine that certain of the objects to be included in the exhibition ''Light and Shadows: The Story of Iranian Jews,'' imported from abroad for temporary exhibition within the United States, are of cultural significance. These objects are imported pursuant to a loan agreement with the foreign owner or custodian. I also determine that the exhibition or display of these exhibit objects at the Fowler Museum at UCLA, Los Angeles, CA, from on or about October 21, 2012, until on or about March 10, 2013, and at possible additional exhibitions or venues yet to be determined, is in the national interest. I have ordered that Public Notice of these Determinations be published in the **Federal Register**.

FOR FURTHER INFORMATION CONTACT: For further information, including a list of the objects covered by this notice, contact Julie Simpson, Attorney-Adviser, Office of the Legal Adviser, U.S. Department of State (telephone: 202–632–6467). The mailing address is U.S. Department of State, SA–5, L/PD, Fifth Floor (Suite 5H03), Washington, DC 20522–0505.

Dated: September 28, 2012.

J. Adam Ereli,

Principal Deputy Assistant Secretary, Bureau of Educational and Cultural Affairs, Department of State.

[FR Doc. 2012–24435 Filed 10–2–12; 8:45 am]

BILLING CODE 4710–05–P

DEPARTMENT OF TRANSPORTATION

Federal Highway Administration

[Docket No. FHWA–2012–0080]

Agency Information Collection Activities: Request for Comments for a New Information Collection

AGENCY: Federal Highway Administration (FHWA), DOT.

ACTION: Notice and request for comments.

SUMMARY: FHWA invites public comments about our intention to request the Office of Management and Budget's (OMB) approval for a new information collection, which is summarized below under **SUPPLEMENTARY INFORMATION**. We published a **Federal Register** Notice with a 60-day public comment period on this information collection on June 22, 2012. We are required to publish this notice in the **Federal Register** by the Paperwork Reduction Act of 1995.

DATES: Please submit comments by November 2, 2012.

ADDRESSES: You may send comments within 30 days to the Office of Information and Regulatory Affairs, Office of Management and Budget, 725 17th Street NW., Washington, DC 20503, Attention DOT Desk Officer. You are asked to comment on any aspect of this information collection, including: (1) Whether the proposed collection is necessary for the FHWA's performance; (2) the accuracy of the estimated burden; (3) ways for the FHWA to enhance the quality, usefulness, and clarity of the collected information; and (4) ways that the burden could be minimized, including the use of electronic technology, without reducing the quality of the collected information. All comments should include the Docket number FHWA–2012–0080.

FOR FURTHER INFORMATION CONTACT: Michael Howell, (202) 366–5707, Office Administration, Information Technology Division, Federal Highway Administration, Department of Transportation, 1200 New Jersey Avenue SE., Washington, DC 20590. Office hours are from 8 a.m. to 5 p.m., Monday through Friday, except Federal holidays.

SUPPLEMENTARY INFORMATION:

Title: Customer Satisfaction Surveys.

Background: Executive Order 12862, ''Setting Customer Service Standards'' requires that federal agencies provide the highest quality service to our customers by identifying them and determining what they think about our existing services and products. The surveys covered in the existing generic

clearance will provide the FHWA a means to gather this data directly from our customers.

The information obtained from the surveys will be used to assist in evaluating service delivery and processes. The responses to the surveys will be voluntary and will not involve information that is required by regulations. There will be no direct cost to the respondents other than their time. The FHWA plans to provide an electronic means for responding to the majority of the surveys via the World Wide Web.

Respondents: State and local governments, highway industry organizations, general public.

Frequency: Generally, on an annual basis.

Estimated Average Burden per Response: The burden hours per response will vary with each survey; however, we estimate an average burden of 15 minutes for each survey.

Estimated Total Annual Burden Hours: We estimate that FHWA will survey approximately 21,000 respondents annually during the next three years. Therefore, the estimated total annual burden is 5,250 hours.

Public Comments Invited: You are asked to comment on any aspect of this information collection, including: (1) Whether the proposed collection is necessary for the FHWA's performance; (2) the accuracy of the estimated burden; (3) ways for the FHWA to enhance the quality, usefulness, and clarity of the collected information; and (4) ways that the burden could be minimized, including the use of computer technology, without reducing the quality of the collected information. The agency will summarize and/or include your comments in the request for OMB's clearance of this information collection.

Authority: The Paperwork Reduction Act of 1995; 44 U.S.C. Chapter 35, as amended; and 49 CFR 1.48.

Issued On: September 28, 2012.

Steven Smith,

Chief, Information Technology Division.

[FR Doc. 2012–24422 Filed 10–2–12; 8:45 am]

BILLING CODE P

DEPARTMENT OF TRANSPORTATION

Federal Motor Carrier Safety Administration

[Docket No. FMCSA–2006–26367]

Motor Carrier Safety Advisory Committee (MCSAC): Public Subcommittee Meeting

AGENCY: Federal Motor Carrier Safety Administration (FMCSA), DOT.

ACTION: Notice of Meeting of Compliance, Safety, Accountability (CSA) Subcommittee of Motor Carrier Safety Advisory Committee (MCSAC).

SUMMARY: FMCSA announces that the CSA Subcommittee of the MCSAC will hold a meeting on Tuesday—Wednesday, October 16–17, 2012. Established at the August 2012 meeting of the MCSAC in accordance with Task 12–03, the subcommittee will provide the MCSAC with concepts, ideas, and recommendations on the CSA program. The entire subcommittee meeting will be open to the public, with a public comment period to occur during the last one-half hour of each day.

TIME AND DATES: The meetings will be held on Tuesday—Wednesday, October 16–17, 2012, from 8:30 a.m. to 4:30 p.m., Eastern Daylight Time (E.D.T.). The meeting will be held at the National Training Center (NTC), 1310 N. Courthouse Road, Suite 600, Arlington, VA in the Western Conference Room. The NTC is accessible by the Courthouse Metro station.

Copies of MCSAC Task Statement 12–03 and an agenda are available at *http://mcsac.fmcsa.dot.gov*.

FOR FURTHER INFORMATION CONTACT: Ms. Shannon L. Watson, Senior Advisor to the Associate Administrator for Policy, Federal Motor Carrier Safety Administration, U.S. Department of Transportation, 1200 New Jersey Avenue SE., Washington, DC 20590, (202) 385–2395, *mcsac@dot.gov*.

Services for Individuals With Disabilities

For information on facilities or services for individuals with disabilities or to request special assistance at the meeting, contact Elizabeth Turner at (617) 494–2068, *elizabeth.turner@dot.gov*, by Wednesday, October 10, 2012.

SUPPLEMENTARY INFORMATION:

I. Background

MCSAC

Section 4144 of the Safe, Accountable, Flexible, Efficient Transportation Equity Act: A Legacy for Users (SAFETEA–LU, Public Law 109–59, 119 Stat. 1144, August 10, 2005) required the Secretary of Transportation to establish the MCSAC. The MCSAC provides advice and recommendations to the FMCSA Administrator on motor carrier safety programs and regulations, and operates in accordance with the Federal Advisory Committee Act (FACA, 5 U.S.C. App 2).

II. Meeting Participation

Oral comments from the public will be heard during the last half-hour of the meeting on each day. Should the subcommittee conclude its deliberations prior to the time stated in this notice, the public comment period will occur at that time. Additionally, should all public comments be exhausted prior to the end of the specified period, the comment period will close. Members of the public may submit written comments on the topics to be considered during the meeting by Wednesday, October 10, 2012, to the Docket, referencing Docket Number FMCSA–2006–26367 using any of the following methods:

- *Federal eRulemaking Portal:* Go to *http://www.regulations.gov*. Follow the online instructions for submitting comments.
- *Fax:* 202–493–2251.
- *Mail:* Docket Management Facility; U.S. Department of Transportation, 1200 New Jersey Avenue SE., West Building, Room W12–140, Washington, DC 20590.
- *Hand Delivery:* U.S. Department of Transportation, 1200 New Jersey Avenue SE., Room W12–140, Washington, DC, between 9 a.m. and 5 p.m., E.T. Monday through Friday, except Federal holidays.

Issued on: September 26, 2012.

Larry W. Minor,

Associate Administrator of Policy.

[FR Doc. 2012–24344 Filed 10–2–12; 8:45 am]

BILLING CODE 4910–EX–P

DEPARTMENT OF VETERANS AFFAIRS

Voluntary Service National Advisory Committee; Notice of Meeting

The Department of Veterans Affairs (VA) gives notice under Public Law 92–463 (Federal Advisory Committee Act) that the Executive Committee of the Department of Veterans Affairs Voluntary Service (VAVS) National Advisory Committee (NAC) will meet October 25–26, 2012, at the Embassy Suites Raleigh-Durham Research Triangle Park, 201 Harrison Oaks Boulevard, Cary, North Carolina. The

sessions will begin at 8:30 a.m. each day and end at 4:30 p.m. on October 25, and at noon on October 26, 2012. The meeting is open to the public.

The Committee, comprised of 57 national voluntary organizations, advises the Secretary, through the Under Secretary for Health, on the coordination and promotion of volunteer activities within VA health care facilities. The Executive Committee consists of 20 representatives from the NAC member organizations.

On October 25, agenda topics will include: NAC goals and objectives; review of minutes from the March 2012 NAC annual meeting; VAVS update on the Voluntary Service program's activities; Parke Board update; evaluations of the 2012 NAC annual meeting; review of membership criteria and process; and plans for 2013 NAC annual meeting (to include workshops and plenary sessions).

On October 26, agenda topics will include: Subcommittee reports; review of standard operating procedures; review of Fiscal Year 2012 organization data; 2014 NAC annual meeting plans; and any new business.

No time will be allocated at this meeting for receiving oral presentations from the public. However, the public may submit written statements for the Committee's review to Ms. Laura Balun, Designated Federal Officer, Voluntary Service Office (10B2A), Department of Veterans Affairs, 810 Vermont Avenue NW., Washington, DC, 20420, or by email at *Laura.Balun@va.gov.* Any member of the public wishing to attend the meeting or seeking additional information should contact Ms. Balun at (202) 461–7300.

By Direction of the Secretary.

Dated: September 27, 2012.

Vivian Drake,

Committee Management Officer.

[FR Doc. 2012–24223 Filed 10–2–12; 8:45 am]

BILLING CODE P

FEDERAL REGISTER

Vol. 77 Wednesday,

No. 192 October 3, 2012

Part II

Department of the Interior

Fish and Wildlife Service

50 CFR Part 17

Endangered and Threatened Wildlife and Plants; 12-Month Finding for the Lemmon Fleabane; Endangered Status for the Acuña Cactus and the Fickeisen Plains Cactus and Designation of Critical Habitat; Proposed Rule

DEPARTMENT OF THE INTERIOR

Fish and Wildlife Service

50 CFR Part 17

[Docket No. FWS–R2–ES–2012–0061; 4500030113]

RIN 1018–AY51

Endangered and Threatened Wildlife and Plants; 12-Month Finding for the Lemmon Fleabane; Endangered Status for the Acuña Cactus and the Fickeisen Plains Cactus and Designation of Critical Habitat

AGENCY: Fish and Wildlife Service, Interior.

ACTION: Proposed rule; 12-month finding.

SUMMARY: We, the U.S. Fish and Wildlife Service (Service), announce a 12-month finding on a petition to list as an endangered or threatened species *Erigeron lemmonii* (Lemmon fleabane). After a review of the best available scientific information we find that listing the Lemmon fleabane as an endangered or threatened species is no longer warranted, and therefore we are removing this species from the candidate list. We propose to list *Echinomastus erectocentrus* var. *acunensis* (acuña cactus) and *Pediocactus peeblesianus* var. *fickeiseniae* (Fickeisen plains cactus) as an endangered species, and we propose to designate critical habitat for both cactus species under the Endangered Species Act of 1973, as amended (Act). If finalized, the effect of these regulations would be to add acuña cactus and Fickeisen plains cactus to the List of Endangered and Threatened Plants and to designate critical habitat for these species.

DATES: We will accept comments received or postmarked on or before December 3, 2012. Comments submitted electronically using the Federal eRulemaking Portal (see **ADDRESSES** section, below) must be received by 11:59 p.m. Eastern Time on the closing date. We must receive requests for public hearings, in writing, at the address shown in the **FOR FURTHER INFORMATION CONTACT** section by November 19, 2012.

ADDRESSES: You may submit comments by one of the following methods:

(1) *Electronically:* Go to the Federal eRulemaking Portal: *http://www.regulations.gov*. In the Keyword box, enter Docket No. FWS–R2–ES–2012–0061, which is the docket number for this rulemaking. Then, in the Search panel on the left side of the screen, under the Document Type heading, click on the Proposed Rules link to locate this document. You may submit a comment by clicking on ''Comment Now!''

(2) *By hard copy:* Submit by U.S. mail or hand-delivery to: Public Comments Processing, Attn: FWS–R2–ES–2012–0061; Division of Policy and Directives Management; U.S. Fish and Wildlife Service; 4401 N. Fairfax Drive, MS 2042–PDM; Arlington, VA 22203.

We request that you send comments only by the methods described above. We will post all comments on *http://www.regulations.gov*. This generally means that we will post any personal information you provide us (see the Information Requested section below for more information).

The coordinates or plot points or both from which the critical habitat maps are generated are included in the administrative record for this rulemaking and are available at *http://www.fws.gov/southwest/es/arizona/, http://www.regulations.gov* at Docket No. FWS–R2–ES–2012–0061, and at the Arizona Ecological Services Field Office (see **FOR FURTHER INFORMATION CONTACT**). Any additional tools or supporting information that we may develop for this rulemaking will also be available at the Fish and Wildlife Service Web site and Field Office set out above, and may also be included in the preamble and/or at *www.regulations.gov*.

FOR FURTHER INFORMATION CONTACT: Steve Spangle, Field Supervisor, U.S. Fish and Wildlife Service, Arizona Ecological Services Field Office, 2321 W. Royal Palm Road, Suite 103, Phoenix, AZ 85021; telephone (602) 242–0210; facsimile (602) 242–2513. Persons who use a telecommunications device for the deaf (TDD) may call the Federal Information Relay Service (FIRS) at 800–877–8339.

SUPPLEMENTARY INFORMATION:

Executive Summary

Why we need to publish a rule. Under the Endangered Species Act of 1973, as amended a species may warrant protection through listing if it is an endangered or threatened species throughout all or a significant portion of its range. The Act sets forth procedures for adding species to, removing species from, or reclassifying species on the Federal Lists of Endangered and Threatened Wildlife and Plants. This document consists of a 12-month not-warranted finding and withdrawal of *Erigeron lemmonii* (Lemmon fleabane) from the candidate list, and a proposed rule to list *Echinomastus erectocentrus* var. *acunensis* (acuña cactus) and *Pediocactus peeblesianus* var. *fickeiseniae* (Fickeisen plains cactus) as endangered species and to designate critical habitat. For the remainder of this document, these species will be referred to by their common names.

The Endangered Species Act provides the basis for our action. Under the Act, we can determine that a species is an endangered or threatened species based on any of five factors: (A) The present or threatened destruction, modification, or curtailment of its habitat or range; (B) overutilization for commercial, recreational, scientific, or educational purposes; (C) disease or predation; (D) the inadequacy of existing regulatory mechanisms; or (E) other natural or manmade factors affecting its continued existence.

We have determined that the Lemmon fleabane does no longer warrant listing. Through our five factor analysis, we have determined that the previously recognized threats to the Lemmon fleabane do not rise to a level of significance such that the species is in danger of extinction now or likely to become so in the foreseeable future.

We have determined that the following are threats to the acuña cactus:

- United States—Mexico border activities including inadequacy of regulatory mechanisms, and
- Predation by native insect and small mammal predators, in combination with other natural or manmade factors, including natural environmental variability and climate conditions such as drought.

We have determined that the following are threats to the Fickeisen plains cactus:

- Livestock grazing;
- Nonnative, invasive species; and
- Predation by native small mammal predators, in combination with other natural or manmade factors, including natural environmental variability and climate conditions such as drought.

This rule also proposes designation of critical habitat for both species. Under the Act, we must, to the maximum extent prudent and determinable, designate critical habitat for any species that is determined to be an endangered or threatened species. We are required to base the designation on the best available scientific data after taking into consideration economic and other impacts. We can exclude an area from critical habitat if the benefits of exclusion outweigh the benefits of designation, unless the exclusion will result in the extinction of the species. In total, we are proposing approximately 21,740 hectares (ha) (53,720 acres (ac)) for designation as critical habitat for

acuña cactus (Table 1) and approximately 19,901 ha (49,186 ac) for the Fickeisen plains cactus (Table 2). The proposed critical habitat for acuña cactus is located in Maricopa, Pima, and Pinal Counties, Arizona. The proposed critical habitat for the Fickeisen plains cactus is in Coconino and Mohave Counties, Arizona.

TABLE 1—PROPOSED CRITICAL HABITAT FOR THE ACUÑA CACTUS

Federal	State	Tribal	Private	Total
Ha (Ac)	Ha (Ac)	Ha (Ac)	Ha (Ac)	Ha (Ac)
11,953 (29,536)	5,773 (14,266)	2,256 (5,575)	1,757 (4,342)	21,740 (53,720)

TABLE 2—PROPOSED CRITICAL HABITAT FOR THE FICKEISEN PLAINS CACTUS

Federal	State	Tribal	Private	Total
Ha (Ac)	Ha (Ac)	Ha (Ac)	Ha (Ac)	Ha (Ac)
6,671 (16,486)	5,617 (13,883)	3,865 (9,554)	3,748 (9,263)	19,901 (49,186)

We are preparing an economic analysis. To ensure that we consider the economic impacts of designating critical habitat, we are preparing an economic analysis of the proposed designation.

We will seek peer review of the methods we used in our proposal. We are seeking comments from independent specialists to ensure that our proposal is based on scientifically sound data, assumptions, and analyses.

We are seeking public comment on this proposed rule. Anyone is welcome to comment on our proposal or provide additional information on the proposal that we can use in making a final determination on the status of these species.

Information Requested

We intend that any final action resulting from this proposed rule will be based on the best scientific and commercial data available and be as accurate and as effective as possible. Therefore, we request comments or information from other concerned governmental agencies, Native American tribes, the scientific community, industry, or any other interested parties concerning this proposed rule. We particularly seek comments concerning:

(1) These species' biology, range, and population trends, including:

(a) Habitat requirements for pollination, reproduction, and dispersal;

(b) Genetics and taxonomy;

(c) Historical and current range including distribution patterns;

(d) Historical and current population levels, and current and projected trends; and (e) Past and ongoing conservation measures for these species, their habitat or both.

(2) The factors that are the basis for making a listing determination for a species under section 4(a) of the Act (16 U.S.C. 1531 *et seq.*), which are:

(a) The present or threatened destruction, modification, or curtailment of their habitat or range;

(b) Overutilization for commercial, recreational, scientific, or educational purposes;

(c) Disease or predation;

(d) The inadequacy of existing regulatory mechanisms; or

(e) Other natural or manmade factors affecting their continued existence.

(3) Biological, commercial trade, or other relevant data concerning any threats (or lack thereof) to these species and existing regulations that may be addressing those threats.

(4) Additional information concerning the historical and current status, range, distribution, and population size of these species, including the locations of any additional populations of these species.

(5) Any information on the biological or ecological requirements of the species, and ongoing conservation measures for the species and its habitat;

(6) The reasons why we should or should not designate habitat as ''critical habitat'' under section 4 of the Act (16 U.S.C. 1531 *et seq.*), including whether there are threats to these species from human activity, the degree of which can be expected to increase due to the designation, and whether that increase in threats outweighs the benefit of designation such that the designation of critical habitat is not prudent.

(7) Specific information on:

(a) The amount and distribution of these species and their habitat;

(b) What may constitute ''physical or biological features essential to the conservation of these species,'' within the geographical range currently occupied by these species;

(c) Where these features are currently found;

(d) Whether any of these features may require special management considerations or protection;

(e) What areas, that were occupied at the time of listing (or are currently occupied) and that contain features essential to the conservation of these species, should be included in the designation and why;

(f) What areas not occupied at the time of listing are essential for the conservation of these species and why.

(8) Land use designations and current or planned activities in the areas occupied by these species or proposed to be designated as critical habitat, and possible impacts of these activities on these species and proposed critical habitat.

(9) Information on the projected and reasonably likely impacts of climate change on these species and proposed critical habitat.

(10) Any foreseeable economic, national security, or other relevant impacts that may result from designating any area that may be included in the final designation. We are particularly interested in any impacts on small entities, and the benefits of including or excluding areas from the proposed designation that are subject to these impacts.

(11) Whether our approach to designating critical habitat could be improved or modified in any way to provide for greater public participation and understanding, or to assist us in

accommodating public concerns and comments.

(12) The likelihood of adverse social reactions to the designation of critical habitat and how the consequences of such reactions, if likely to occur, would relate to the conservation and regulatory benefits of the proposed critical habitat designations.

(13) Information on certain populations of Fickeisen plains cactus. Specifically, there are eight populations where the Fickeisen plains cactus has been documented, but these areas have not been visited in over 18 years. Five populations are located on the Arizona Strip and are referred to as: Beanhole Well, Marble Canyon, Salaratus Draw, South Canyon, and Toquer Tank. The sixth population is located in proximity to Mays Wash that is south of the Town of Gray Mountain among Federal, State, and private lands. The last two populations are on the Navajo Nation. These eight areas are proposed as critical habitat for the Fickeisen plains cactus. We are seeking any information on specific population status of the Fickeisen plains cactus at these locations, whether these locations are currently occupied and contain the features essential to the conservation of the species, and the condition of the habitat.

Please include sufficient information with your submission (such as scientific journal articles or other publications) to allow us to verify any scientific or commercial information you include.

Please note that submissions merely stating support for or opposition to the action under consideration without providing supporting information, although noted, will not be considered in making a determination, as section 4(b)(1)(A) of the Act directs that determinations as to whether any species is an endangered or threatened species must be made ''solely on the basis of the best scientific and commercial data available.''

You may submit your comments and materials concerning this proposed rule by one of the methods listed in the **ADDRESSES** section. We request that you send comments only by the methods described in the **ADDRESSES** section.

If you submit information via *http://www.regulations.gov,* your entire submission—including any personal identifying information—will be posted on the Web site. If your submission is made via a hardcopy that includes personal identifying information, you may request at the top of your document that we withhold this information from public review. However, we cannot guarantee that we will be able to do so. We will post all hardcopy submissions on *http://www.regulations.gov.* Please include sufficient information with your comments to allow us to verify any scientific or commercial information you include.

Comments and materials we receive, as well as supporting documentation we used in preparing this proposed rule, will be available for public inspection on *http://www.regulations.gov,* or by appointment, during normal business hours, at the U.S. Fish and Wildlife Service, Arizona Ecological Services Field Office (see **FOR FURTHER INFORMATION CONTACT**).

Organization of Document

The layout of this rule is as follows: The 12-month not-warranted petition finding and candidate withdrawal for the Lemmon fleabane; the proposed listing of the acuña cactus and the Fickeisen plains cactus; the proposed critical habitat for the acuña cactus and the Fickeisen plains cactus.

12-Month Petition Finding and Candidate Withdrawal for the Lemmon Fleabane

This section summarizes the status and potential threats that we evaluated in order to determine that listing Lemmon fleabane is not-warranted and to remove it from candidate status. Additional material that we relied on is available in the Species Assessment and Listing Priority Assignment Form for Lemmon fleabane. This form is available on our national endangered species Web site: *http://www.fws.gov/endangered/* (search for ''Lemmon fleabane'' in the Species Search box).

On July 1, 1975 (40 FR 27824), the Lemmon fleabane was included among 3,000 plant species under status review. We first identified the Lemmon fleabane as a category 1 candidate species on September 30, 1993 (58 FR 51144). Candidates are those fish, wildlife, and plants for which we have on file sufficient information on biological vulnerability and threats to support preparation of a listing proposal, but for which development of a listing regulation is precluded by other higher priority listing activities. Candidate species were assigned a relative listing priority number in accordance with listing priority guidelines published on September 21, 1983 (48 FR 43098). On the basis of immediacy and magnitude of threats, as well as taxonomic status, we assigned the Lemmon fleabane a listing priority number (LPN) of 11, which is assigned when threats are of moderate to low magnitude and non-imminent. On October 25, 1999, we changed the LPN to a 5 to reflect threats that are of high magnitude but non-imminent, based on the threat of high severity fire and drought (64 FR 57534). Later, we decided a wildfire or drought would not adversely affect the entire population; therefore, on September 12, 2006, we changed the LPN to an 8, reflecting threats that are of moderate to low magnitude and imminence (71 FR 53756), and this LPN remained in effect until the last Candidate Notice of Review in 2011 (76 FR 66370, October 26, 2011). We now find that listing this species is not-warranted, and we are withdrawing this species from candidate status because the previously recognized threats to the Lemmon fleabane do not rise to the level of significance such that the species is in danger of extinction now or likely to become so in the foreseeable future. Our rationale is explained below.

The Lemmon fleabane is a tap-rooted perennial plant of the aster family (Nesom 2006, p. 342). The Lemmon fleabane occurs in crevices and ledges, on all aspects of tall, vertical-faced, and very cuspid (pointed) Escabrosa limestone cliffs of a single canyon, Scheelite Canyon, on Fort Huachuca on Department of Defense lands, in Cochise County, Arizona (Warren *et al.* 1991, p. 5; Malusa 2006, pp. 9–11). The habitat occurs over an area of approximately 50 ha (124 ac), and, as of 2006, the population is estimated to support 954 individuals (Malusa 2006, p. 9).

The primary threat previously identified for the Lemmon fleabane was high severity wildfire, a phenomenon outside of the established fire history for the forests of the Huachuca Mountains. Scheelite Canyon is a narrow, shady, bedrock-laden cold-air-drainage, with higher humidity and cooler temperatures than surrounding areas; these factors aid in limiting the spread of severe fire within the canyon (Turner and Romme 1994, p. 59; Gebow and Hessil 2006, p. 21; Werth *et al.* 2011, p. 27). In addition, Scheelite Canyon is a southeast to northwest configured canyon that blocks prevailing southwesterly wind. Strong southwesterly wind was a necessary component in the unusual fire behavior documented in recent high severity fires of the Huachuca Mountains, where southwest to northeast configured canyons burned downslope and burned very hot (Leiendecker 2012, pers. comm.).

Although Scheelite Canyon currently contains a woody fuel load, fire experts believe the Lemmon fleabane itself is relatively safe from fire (Gebow and Hessil 2006, p. 51; Leiendecker 2012, pers. comm.). Recent documentation of two other rare, cliff-dwelling *Erigeron* species of the Chiricahua Mountains of

southern Arizona indicates that plants growing in cracks within the rockwall may be both resistant and resilient to high severity fire (Malusa 2012, pers. comm.). In the unlikely event of a catastrophic fire within Scheelite Canyon, it would be extremely unlikely that every Lemmon fleabane plant would be extirpated. This is because Lemmon fleabane plants occur on all aspects of rock face, on both sides of the canyon including the entrances of small tributaries, and at all elevations on the canyon wall from the canyon bottom upwards nearly 305 meters (m) (1,000 feet (ft)) to the top of the canyon walls.

In summary, there is a very small probability that Scheelite Canyon will sustain a catastrophic fire in the future due to the southeast to northwest aspect of the canyon in the landscape; its humid, shady, and cool nature; and the presence of exposed rock outcroppings throughout the canyon lending to a discontinuous fuel load. Should such a fire occur, it would threaten individual plants exposed to flame and heat (Gebow and Hessil 2006, p. 85); however, due to the plants occurring in a variety of locations within the canyon, it is unlikely that all plants would be affected.

Recreational rappelling was noted as a minor threat to the Lemmon fleabane; however, we conclude that there is a very low probability of this type of activity taking place in Scheelite Canyon because recreational rappelling is not allowed by Fort Huachuca. Further, if unauthorized rappelling were to occur, the damage to Lemmon fleabane plants would be insignificant at the population level.

In addition to fire and rappelling posing less of a threat to the Lemmon fleabane than previously believed, several conservation measures have recently occurred or are being planned. Although we did not rely on these conservation measures to make our not-warranted finding, they are underway and will benefit the Lemmon fleabane now and into the future. In 2011, the Desert Botanical Garden collected hundreds of viable Lemmon fleabane seeds for long-term storage. This collection and future-planned seed collection by the Desert Botanical Garden may help offset impacts to the species in the event of a devastating wildfire and habitat loss. In addition, the U.S. Forest Service is currently working with Fort Huachuca to reduce fire potential at a landscape level throughout the district and on Fort Huachuca itself (Leiendecker 2012, pers. comm.). Finally, Fort Huachuca and the Service are drafting a conservation agreement which, once signed, will: (a) Ensure the continued monitoring of the Lemmon fleabane population and promote adaptive management based on monitoring results; (b) continue the restrictions on recreational activities in Lemmon fleabane habitat; and (c) encourage further research into the species' life history, population biology and demographics, and distribution.

Through our five-factor analysis, we have discounted any threats to the species and conclude there are no significant threats to the Lemmon fleabane. We, therefore, conclude that the previously recognized threats to the Lemmon fleabane do not rise to a level of significance such that the species is in danger of extinction now or in the foreseeable future. Additionally, we are not aware of any other potential stressors or threats that may impact the species or its habitat by itself or in combination, including the potential environmental effects that may result from climate change. Current and planned conservation measures will also benefit the Lemmon fleabane, although we are not relying on these conservation actions as the basis for our not-warranted finding. As a result, we have removed this species from the candidate list.

Acuña Cactus and Fickeisen Plains Cactus

Previous Federal Actions

On July 1, 1975 (40 FR 27824), we published a Review of Status of Vascular Plants identifying the acuña cactus and the Fickeisen plains cactus as among 3,000 native plant taxa being reviewed for possible inclusion in the list of endangered and threatened species. On December 15, 1980, we published a Review of Plant Taxa for Listing as Endangered or Threatened Species and identified the Fickeisen plains cactus as category 1 species (45 FR 82480). Category 1 species were those taxa for which we had on file substantial information on biological vulnerability and threats to support proposing them as endangered or threatened species. The acuña cactus was not included in the 1980 notice. Both the acuña cactus and the Fickeisen plains cactus were included in the February 21, 1990, notice (55 FR 6184) as category 1 species.

In the September 30, 1993, notice (58 FR 51144) candidate species were assigned a status category indicating their status at that time. Each species was identified as increasing (I), stable (S), declining (D), or unknown (U). The 1993 notice identified the acuña cactus and the Fickeisen plains cactus as category 1–U: unknown, denoting species for which additional survey work is required to determine current trends.

We discontinued the use of a category system in the February 28, 1996, notice (61 FR 7596) and simply referred to category 1 species as candidate species. The acuña cactus and Fickeisen plains cactus were both assigned an LPN of 6, due to the high magnitude of threats which were non-imminent. We published four Candidate Notice of Reviews between 1997 and 2003, in which the acuña cactus and the Fickeisen plains cactus remained candidate species with an LPN of 6 (62 FR 49398, September 19, 1997; 64 FR 57534, October 25, 1999; 66 FR 54808, October 30, 2001; 67 FR 40657, June 13, 2002).

On October 30, 2002, we received a petition from the Center for Biological Diversity to list the acuña cactus as an endangered species under the provisions of the Act. On May 4, 2004, the Center for Biological Diversity petitioned the Service to list the acuña cactus and the Fickeisen plains cactus as an endangered species under the Act. Because these species were already candidates for listing, we did not issue findings on the petition. In the Candidate Notice of Review dated September 12, 2006 (71 FR 53756), we revised the LPN of the Fickeisen plains cactus from 6 to 3 based on direct mortality and reduced reproductive capacity resulting from off-road vehicle (ORV) use, trampling associated with livestock grazing, a continuing drought, and herbivory by rabbits and rodents. We also acknowledged that unauthorized collection of the Fickeisen plains cactus was a potential threat but we did not know at that time whether it was a continuing threat. In the notice of December 6, 2007 (72 FR 69034), we revised the LPN of the acuña cactus from 6 to 3 based on continued decline of the species caused by ongoing drought. An LPN of 3 reflects threats that are both imminent and high in magnitude, as well as the taxonomic classification as a subspecies. In plant classification generally, the use of the term variety, such as is used in the plants in this rule, is synonymous with the term subspecies. In the notice of October 26, 2011 (76 FR 66370), we retained an LPN of 3 for both species.

Background

For each of the two cactus species, we provide a description of the species, its life history, its habitat, an evaluation of listing factors for that species, and our finding for the species.

Acuña Cactus

It is our intent to discuss below only those topics directly relevant to the listing of the acuña cactus as an endangered species in this section of the proposed rule.

Species Description

The acuña cactus is a small, spherical cactus, usually single-stemmed, that can be up to 40 centimeters (cm) (16 inches (in)) tall and 9 cm (3.5 in) wide (Arizona Rare Plant Guide Committee 2001, unpaginated; Zimmerman and Parfitt 2003, pp. 194–195). The acuña cactus has 11 to 15 radial spines up to 2.5 cm (1.0 in) long and 3 to 4 mauve-colored, up-turned central spines up to 3.5 cm (1.4 in) long (Arizona Rare Plant Guide Committee 2001, unpaginated; Zimmerman and Parfitt 2003, pp. 194–195). Rose, pink, or lavender flowers 3.6 to 6 by 4 to 9 cm (1.4 to 2.3 by 1.6 to 3.5 in) are produced in March (Arizona Rare Plant Guide Committee 2001, unpaginated; Zimmerman and Parfitt 2003, pp. 194–195). The fruits are pale green, are 1.25 cm (0.5 in) long, and contain small, nearly black seeds (Felger 2000, p. 208). The fruits ripen in April (Arizona Rare Plant Guide Committee 2001, unpaginated).

Biology

The acuña cactus relies solely on the production of seeds for reproduction, with pollination highly linked to survival, as the species cannot fertilize itself. Acuña cacti are pollinated by a suite of bees from the Andrenidae, Anthophoridae, Anthophorinae, Halictidae, and Megachilidae families; however, the leafcutter bee (*Megachile palmensis*) and cactus bee (*Diadasia rinconis*) are thought to be the primary pollinators (Johnson 1992, p. 406). The maximum distance that either of these bees travel is thought to be roughly 900 m (2,953 ft) (see Critical Habitat section, below).

Although we do not know the lifespan of acuña cacti, there are individual plants that have been tracked at Organ Pipe Cactus National Monument (OPCNM) since 1977, and are still alive in 2012 (Holm 2012a, pers. comm.). The lifespan of seeds in the seedbank is unknown; however, in independent greenhouse tests of 6 and 4 year-old seed collected from two discrete populations, less than 19 percent and zero percent germination resulted, respectfully (Rutman 2007, p. 7). In tests of 1 and 2 year-old seed, germination ranged from 64 to 100 percent, and tests of seed collected 19 days previously resulted in 82 percent germination (Rutman 2007, p. 7). It is unknown if seed in its natural environment has the same short lifespan as has been demonstrated in these germination trials.

Taxonomy

This species was originally described in 1953 by W.T. Marshall as *Echinomastus acunensis* (Marshall 1953, pp. 33–34). It is known by many synonyms, including *Sclerocactus erectocentrus* var. *acunensis* (Coulter) Taylor and *Neolloydia erectocentra* (W.T. Marshall) var. *acunensis* L. Benson (Arizona Game and Fish Department (AGFD) 2004, p. 1). The Cactaceae treatment in the Flora of North America (Zimmerman and Parfitt 2003, pp. 194–195) recognizes the entity as *E. erectocentrus* var. *acunensis.* The other variety, *E. erectocentrus* var. *erectocentrus* (needle-spine cactus), is also recognized as a valid taxon in the Flora of North America. The two varieties are generally considered to be morphologically distinct and geographically isolated, but there have been questions regarding the morphology of some individuals (AGFD 2004, p. 6). To address those concerns, the Service funded a project to analyze the morphological distinctness of the two varieties, which was completed in January 2007. The results of this study suggest that there are four distinct taxonomic groups, including the separation of variety *acunensis* and variety *erectocentrus* (Baker 2007, pp. 19–21), and we concur with the study results. Therefore, the acuña cactus and the needle-spine cactus are valid and distinct taxa separated morphologically and geographically. Baker (2007, p. 20) recommended nomenclatural changes, based on the International Rules of Botanical nomenclature, but formal name changes were not proposed in his study. Again, we refer to the taxonomy determined by the Flora of North America.

Habitat

The acuña cactus occurs in valleys and on small knolls and gravel ridges of up to 30 percent slope in the Palo-Verde-Saguaro Association of the Arizona Upland subdivision of the Sonoran Desert scrub at 365 to 1,150 m (1,198 to 3,773 ft) in elevation (Phillips *et al.* 1982, p. 4; Arizona Rare Plant Guide Committee 2001, unpaginated; AGFD 2011, entire). This species grows on soil overlying various bedrock types including extrusive felsic volcanic rocks of rhyolite, andesite, and tuff, and intrusive igneous rocks composed of granite, granodiorite, diorite, and Cornelia quartz monzonite; Locomotive fanglomerate (sedimentary rock consisting of heterogeneous fragments of all sizes deposited in an alluvial fan and later consolidated) is also locally present (Rutman 2007, pp. 1–2; Anderson 2012a, pers. comm.). Mineralogy of these rocks is varied, with felsic or mafic phenocrysts present, depending on bedrock type (Rutman 2007, pp. 1–2; Anderson 2012a, pers. comm.). Soil texture in these locations varies between bedrock and both coarse- and fine-textured substrates (Rutman 2007, pp. 1–2). Associated plant species include *Larrea tridentata* var. *tridentata* (creosote bush), *Olneya tesota* (ironwood), *Cercidium microphyllum* (palo verde), *Ambrosia deltoidea* (triangle-leaf bursage), and *Acacia greggii* (catclaw). The acuña cactus is often noted growing under the protective canopy of these or other associated species (Phillips *et al.* 1982, p. 6; Butterwick 1982–1992, entire; Felger 2000, p. 208; Service 2011a, p. 1; Service 2011b, p. 3), which may act as nurse plants, thereby sheltering seedlings from extreme temperatures and providing some protection from mechanical disturbance (Nobel 1984, p. 316; Suzán *et al.* 1996, p. 635).

Distribution and Range

The acuña cactus populations are known from Maricopa, Pima, and Pinal Counties in Arizona and from Sonora, Mexico (AGFD 2004, p. 2). In western Pima County, plants are known from the Puerto Blanco Mountains and adjacent Aguajita Wash and in the foothills of the Growler Mountains south of Dripping Spring on National Park Service (NPS) lands within OPCNM; from the Sauceda Mountains on Bureau of Land Management (BLM) lands; from Department of Defense military lands on the Barry M. Goldwater Gunnery Range (BMGR); and from private lands near Ajo. There is an unconfirmed report of acuña cactus individuals occurring on Tohono O'odham lands in the vicinity of known populations on BLM and BMGR lands; however this has not been verified (Howe 2012, pers. comm.). In Maricopa County, the acuña cactus is known from the Sand Tank Mountains on BLM lands within the Sonoran Desert National Monument. In Pinal County, plants are known from Mineral Mountain on BLM, State, and private lands. In Sonora, Mexico, the acuña cactus occurs on Reserva de la Biosfera El Pinacate y Gran Desierto de Altar (Pinacate Biosphere Reserve) and private ejido (ranch) lands. Available information indicates that the current range of this species does not differ from the historical range, with the exception that the current Ajo populations likely had been part of a larger population that

occurred before mining activity began there (Rutman 1996b, pers. comm.; Rutman 2007, p. 7). However, there are no survey records for this species in the area prior to mining activity.

Abundance and Trends

As the number of dead individuals documented within acuña cactus populations has increased greatly since study began in the 1970s (when tracking first began), it is important to track the number of healthy, unhealthy, and dead individuals. This not only allows us to document trends in total plant numbers, but can help in our understanding of the cause and extent of mortality.

Federal Land—Organ Pipe Cactus National Monument (OPCNM)

There is one large area of approximately 1,326 ha (3,277 ac) within OPCNM that contains as many as 2,000 acuña cactus individuals (Rutman 2011, pers. comm.; AGFD 2011, entire). In 1981, this population was estimated to contain 10,000 individuals (Buskirk 1981, p. 3). Within this area, two 20-by 50-m (66-by 164-ft) permanent monitoring plots were established in 1977, with the aim of investigating growth, mortality, and recruitment of this species. Between 1977 and 1981, there was 31 percent mortality in the plots (Phillips and Buskirk 1982, p. 2). Two more plots were added in 1983, and two more in 1988. From 1988 through 1991, the population was thought to be stable or increasing (Johnson *et al.* 1993, p. 172). From 1993 through 2011, annual mortality was variable, but exceeded recruitment in most years (NPS 2011a, p. 2). In 2011, the total number of individuals recorded in all six plots was 39 adults and 10 juveniles, showing little change since 2010. This however represents a marked decrease since their peak in 1991, when 446 individuals were recorded in the plots, 221 of which were juveniles (Holm 2006, p. 9; NPS 2011a, entire).

In order to verify the identification and location of plants, specimens are collected, pressed, and placed on sheets that are stored in herbaria. A 1952 herbarium collection from a second location within OPCNM is evidence that a second disjunct population of the acuña cactus occurred historically within OPCNM. Current NPS staff were unaware of this herbarium collection, and the site, reported to be within 3 m (10 ft) of the U.S.-Mexico border, has not been revisited since 1952. Site visits in this area are currently considered dangerous, and therefore no efforts have been made to confirm the location of the population; we do not know if the population exists at this location.

Federal Land—Bureau of Land Management

Sauceda Mountains—Within the Coffeepot Area of Critical Environmental Concern (ACEC), there are several small acuña cactus populations, each on less than 2 ha (5 ac) of land.

In 1982, the BLM (Phoenix District) established three 20-by 50-m (66-by 164-ft) monitoring plots on Coffeepot Mountain. These plots were visited, and data were collected periodically between 1982 and 1992. In 1982, 157 living and 3 dead plants were found within plots. Over the years of study, many new recruits were found; however, there was also ongoing mortality with newly dead individuals documented each year. A census of individuals from both within and nearby the plots in 1987 found 310 living and 332 dead plants (Rutman *et al.* 1987, p. 2). BLM staff reported a precipitous decline of this population in 1989 (Johnson 1989, p. 1). By the last monitoring visit to the plots in 1992, 150 plants were recorded dead, 22 plants were recorded missing and presumed dead, and 150 plants remained that were either healthy or in some stage of decline (Butterwick 1982–1992, entire). A note to the files in 1991 stated that many individual plants were missing, dead, or dying, and that there appeared to be little regeneration in this population (BLM 1991, p. 1). The plots have not been formally measured since 1992, but the BLM has visited this site 21 times since then to assess general health and threats to the population. Field notes by the BLM botanist in 2007 mentioned that the number of living individuals in and near these plots had been reduced by half since the 2006 site visit (Anderson 2011, p. 2). Because no population estimates were made during either year, it is difficult to know how many plants survive in and around these plots. Field notes do indicate that few juveniles were seen in 2008, and no juveniles were seen in 2009; no mention of juveniles was made in 2010 or 2011 (Anderson 2011, p. 2).

In 2006, a second population, estimated to be between 50 and 100 individuals, was located 1.2 kilometers (km) (0.75 miles (mi)) northwest of the Coffeepot Mountain monitoring plots in Ryans Canyon (Rutman 2006, p. 2). Rutman (2006, entire) did not mention size class or health of this population. This site has not been revisited.

A third population was discovered in 2006, 1.4 km (0.87 mi) to the northeast of the Coffeepot Mountain monitoring plots. Approximately 30 acuña cacti were noted there at the time; 25 percent mortality was reported one year later (Anderson 2011, p. 1). An October 2011 site visit by Service and BLM botanists revealed 23 adult and 2 juvenile living and 15 dead plants at this location (Service 2011a, p. 3). A fourth population was discovered by the BLM in March 2011, in a location near the third population; 10 plants were noted. No indications were given as to the age class structure or health of this population (Anderson 2011, entire).

At a site BLM calls Little Ajo Mountains, southeast of the New Cornelia Mine on less than 0.4 ha (1 ac), the population has fluctuated from 5 plants in 1997, to 7 plants in 2001, to 7 plants in 2006, to 11 plants in 2007, to 7 plants in 2008, and finally to 12 plants (including 5 very small plants) in 2011 (Rutman 2006, p. 2; Anderson 2011, entire; Service 2011a, p. 1).

Sonoran Desert National Monument—In 2006, approximately 200 individuals were reported from the Sand Tank Mountains in an area less than 25 ha (61.8 ac) in size. In 2007, the site was revisited, and four groups of individuals accounting for 125 of the approximately 200 individuals were mapped (Anderson 2012b, pers. comm.; Anderson 2011, p. 2). No indications were given as to the age class, structure, or health of this population (Anderson 2011, entire).

Mineral Mountain—There are 3 individual acuña cacti growing on BLM land adjacent to 30 living plants and 22 dead plants on State lands. This population is discussed collectively below under State lands.

Federal Land—Barry M. Goldwater Gunnery Range

In 1997, a single adult individual was reported from just north and outside of the populations in the Coffeepot ACEC (Geraghty *et al.* 1997, p. 5) within Department of Defense (DOD) managed lands on the Barry M. Goldwater Gunnery Range (BMGR); this site has not been revisited.

State Land

Mineral Mountain—Plants were collected by Hart in 1992, from the population straddling BLM and State land east of Florence (University of Arizona Herbarium 2011, entire). There were no details of the number of individuals seen, just a map with three locations. In the 1990s, the BLM revisited this site and estimated 100 individuals scattered across 3 ridgelines (Service 2008a, p. 1). In 2008, the Service and BLM searched this area. The Service and BLM found fewer than 20 living and many dead plants; no young plants were seen. In 2011, the

Service and BLM botanists revisited the location and found 30 living and 22 dead plants scattered across 4 adjacent ridgelines on less than 5 ha (12.4 ac) of land; no juveniles were found (Service 2011b, p. 1).

Ninety-Six Hills—This population is in the vicinity of Florence on less than 1 ha (2.47 ac) of land. Parfit (1977, p. 1) noted that plants here were common, but very localized. Many plants of various ages and sizes were noted, as well as many dead plants. Engard (1977, p. 1) noted many seedlings and mature plants and also that the plants were abundant locally. Rutman and Krausman (1988, p. 1) found 29 live plants and 6 dead plants in a 2-hour survey in the same general area. Breslin (2008, pp. 3–5) reported that in over 60 hours of survey effort in the area he had located 45 plants, 1 seedling, and 17 dead plants. On March 20, 2008, the Service plant ecologist found 11 live plants and 10 dead plants in a 3-hour survey. In the same general area, C. Butterworth (2008, pers. comm.) found 32 live plants, of various sizes, except seedlings. He noted that seedlings were very noticeably absent. A 2011 2-hour survey by three Service and BLM botanists revealed no living and two dead adults in this same general area (Service 2011b, p. 3). Because this population was not mapped with Geographic Information Systems, it is impossible to know if survey efforts in 1977, 1988, 2008, and 2011 were all conducted in the exact same location within this general area. Therefore, it is not possible to conclude that this population has been extirpated.

Private Land

Ajo Area—The combined area of these multiple sites is less than 0.4 ha (1 ac) (Rutman 2007, p. 1).

An isolated population near Darby Wells was first reported by Heil and Melton (1994, p. 14). Fewer than 10 plants were found at this site in 2007 (Rutman 2007, p. 4). There is no record if juveniles were among the plants found. The site has not been revisited.

On Indian Village Hill, there were 102 plants in 1996, when the population was first recorded (Rutman 1996b, pers. comm.). In 2006, 30 living and 33 dead plants were found; in 2007, a quick census noted fewer than 40 plants found (Rutman 2006, p. 1; Rutman 2007, p. 4). There is no record if juveniles were among the plants found in either year. In 2011, eight living and seven dead plants were recorded; no juveniles were found (Service 2011a, p. 1).

There were 16 live and 19 dead plants on Weather Tower Hill in 2006 (Rutman 2006, p. 1). There is no record if juveniles were among the plants found. The site has not been revisited.

Florence Area—Roadside populations occur on less than 0.4 ha (1 ac) collectively; any additional populations that may be present on private land occur on an unknown quantity of land.

Roadside Population One—The 2011 site visit revealed 9 living and 2 dead individuals; no juveniles were found, though all 9 were young healthy individuals (Service 2011b, p. 2)

Roadside Population Two—The 2011 site visit revealed 2 living and 2 dead individuals; no juveniles were found (Service 2011b, p. 2)

There may be other locations on private lands unknown to Service or BLM botanists.

Sonora, Mexico

Felger (2000, p. 208) noted the occurrence of the acuña cactus between 3 and 18 km (2 and 11 mi) southwest of Sonoyta; no population estimates were made. Surveys of 7 groups of plants in this area from 2009 through 2010 revealed 659 living and 942 dead plants growing on approximately 1,700 ha (4,200 ac) (Pate 2011, pers. comm.; Pate 2011, map 1 and map 2). Pate (2012a, pers. comm.) noted seeing a few small seedlings among these plants.

Summary

Presented below is the total estimate of living, dead, and juvenile acuña cactus plants in populations visited over multiple years, including census results from 2011 and from previous years if sites have not been revisited or population estimates not updated. Notable trends are the large amount of mortality within the populations that have been visited more than once and the low numbers of juvenile plants in the populations.

- NPS—2,000 plants, or 58.9 percent of known individuals; estimated in 2011 by NPS staff. This population estimate is down from 10,000 individuals estimated at this location in 1981. Within the OPCNM plots, the number of recorded individuals peaked in 1991, with 446 plants found. In 2011, 49 total individuals including 10 juveniles were noted within these plots.
- Sonora, Mexico—659 plants or 19.4 percent of known individuals; estimated from 2009 to 2010 surveys. Nine hundred and forty-two dead individuals were also recorded during this survey period. There are no previous estimates from this population. A few juvenile plants were noted during the 2009 to 2010 survey period.
- BLM—655 plants, or 19.3 percent of known individuals; estimated from 2011 and other recent surveys. At Coffeepot mountain within the largest BLM population, 310 living and 332 dead individuals were recorded in 1987. This population was reduced to 150 individuals by 1992, and was reduced to approximately 75 individuals by 2006. No juveniles were noted since 2008, when a few were seen.
- Private Land—48 plants (37 near Ajo and 11 near Florence), or 1.4 percent of known individuals; estimated from 2011 and other recent surveys. A single population that was revisited on several occasions showed a total population of 102 individuals in 1996; in 2006, 30 living and 33 dead plants were found. In 2011, just 8 adult plants and no juveniles were recorded from this population.
- State Land—32 plants, or 0.9 percent of known individuals; estimated from 2011 surveys. At one location in the 1990s, the population was estimated to be 100 individuals; in 2008, only 20 living and many dead plants were found with no juveniles seen. In 2011, 30 living plants were recorded, including a new subpopulation previously not recorded. No juvenile plants were located in 2011. At a second location, in 1977, plants were considered common but localized, and the site supported many plants of various ages and sizes. Surveys of this area in 2008 resulted in the location of 45 adult plants with no juveniles found. In 2011, no living plants and two carcasses were located in this same area.
- Military BMGR—1 plant, or less than 0.1 percent of known individuals in 1997; the site has not been revisited.

Summary of Factors Affecting the Acuña Cactus

Section 4 of the Act (16 U.S.C. 1533), and its implementing regulations at 50 CFR part 424, set forth the procedures for adding species to the Federal Lists of Endangered and Threatened Wildlife and Plants. Under section 4(a)(1) of the Act, we may list a species based on any of the following five factors: (A) The present or threatened destruction, modification, or curtailment of its habitat or range; (B) overutilization for commercial, recreational, scientific, or educational purposes; (C) disease or predation; (D) the inadequacy of existing regulatory mechanisms; and (E) other natural or manmade factors affecting its continued existence. Listing actions may be warranted based on any of the above threat factors, singly or in combination. Each of these factors is discussed below.

Factor A. The Present or Threatened Destruction, Modification, or Curtailment of Its Habitat or Range

Based on the habitat characteristics described above, potential factors that may affect the habitat or range of the acuña cactus are: (1) Urban development and site degradation; (2) livestock grazing; (3) border activities; (4) nonnative, invasive plant species; (5) mining; and (6) drought and climate change.

Urban Development and Site Degradation

The immediate threats from urban development include the direct loss of individuals and habitat. Indirect impacts of urban development include fragmentation of acuña cactus and associated pollinator populations, which can reduce genetic vigor of the cactus and result in degradation and fragmentation of habitat adjacent to development. When development occurs, there is also an increased use of habitat for recreational activity, which may also deplete habitat and result in mortality of individuals. The acuña cactus populations in OPCNM and the Sonoran Desert National Monument are protected from the immediate threats associated with urban development due to their National Monument status. National Monuments are lands set aside and managed to protect the natural and cultural resources within; development is minimal, though some site degradation may still occur.

To meet the country's energy demands, there has been a recent emphasis by the Federal Government to use BLM lands for development of renewable energy. Currently, there are no planned solar or wind energy projects on or near populations of the acuña cactus in the Sauceda, Sand Tank, or Mineral Mountains (Werner 2011, pers. comm.). In addition, most populations on BLM lands are remotely located and relatively inaccessible; therefore, we do not anticipate development in these areas.

As Arizona's population is expected to continue to grow in the future, both Pinal County and the State Land Department are promoting urban development in the vicinity of Florence (Pinal County 2009, pp. 4, 60, 94; Guthrie *et al.* 2011, p. 1). When the housing market rebounds, it is likely that additional State lands in this area will be sold for urban development (Pinal County 2009, p. 42; Guthrie *et al.* 2011, p. 2). In the vicinity of Florence, there are no current plans for development of State lands known to support acuña cacti. Private lands near Florence containing acuña cacti populations have been for sale as subdivided 16.2-ha (40-ac) parcels for many years. With the recent economic downturn, it is unlikely this land will be sold in the near future. The only known private land populations where access is readily available are at 3 sites near Ajo, totaling less than 0.4 ha (1 ac) and supporting fewer than 40 individuals in total (Rutman 2006, p. 1; Rutman 2007, pp. 1, 4; Service 2011a, p. 1). In most of the privately owned locations, the sites are littered with broken glass, bottles, and trash; however, plants appear little impacted by this habitat degradation (Service 2011a, p. 1; Service 2011b, p. 2).

Indirect urbanization effects to the areas that support the acuña cactus include ORV activity, which has been reported on BLM lands near both Ajo and Florence. These reports, however, showed no impact on the acuña cactus populations in 1994 (Heil and Melton 1994, pp. 15–16), although habitat degradation and direct loss of individuals is possible from this activity. In 1988, the BLM closed the Coffeepot ACEC to recreational ORV use (BLM 2011, p. 194) and, in 1990, prohibited ORV use outside of designated trails within the Sonoran Desert National Monument (BLM 2011, p. 181). In 2011, the BLM Lower Sonoran Field Office released a Draft Resource Management Plan and Environmental Impact Statement (Draft RMP/EIS) for review (BLM 2011, entire). This document supports the continued prohibition of ORVs outside of designated trails within the Sonoran Desert National Monument (BLM 2011, p. 181). Within the Coffeepot ACEC, alternatives for motorized travel range from no use to limited use on existing routes, but all alternatives restrict travel off of existing routes, thereby reducing the potential for impacts to the acuña cactus (BLM 2011, pp. 181, 185–188). Once finalized, the new RMP/EIS for the Lower Sonoran and the Sonoran Desert National Monument will remain in effect for the next 15 to 20 years (Foreman 2011, pers. comm.). The impacts of ORV activity on State or private lands are unknown; for ORV activity within the border region, see the discussion below of border activities.

In Sonora, Mexico, scattered populations of the acuña cactus occur within 10 km (6.2 mi) of the town of Sonoyta. Although the area is reported to be little-used and unoccupied except by drug and human smugglers (Pate 2011, pers. comm.), in recent decades and as a result of human demand, the Sonoyta region has been heavily impacted by *Olneya tesota* (ironwood) and *Prosopis velutina* (mesquite) woodcutting for coal production, brick foundries, and tourist crafts, and the lands' subsequent conversion to exotic grasslands for cattle grazing (Suzán *et al.* 1997, pp. 950, 955). This activity has affected more than 193,000 ha (478,000 ac) of lands in the Sonoyta region (Nabhan and Suzán 1994, p. 64). In a study of ironwood extraction in northern Mexico, the Sonoyta study sites exhibited the highest number of damaged and dead trees, and had the lowest associated plant diversity (Suzán *et al.* 1996, p. 642). It is likely that habitat parameters for the acuña cactus populations in Sonora are impacted by this activity, particularly because ironwood is considered a dominant associate of the acuña cactus (Phillips *et al.* 1982, p. 5) and may serve as a nurse plant for a variety of cacti (Suzán *et al.* 1996, p. 635).

In addition, the actions of harvesting, burning, loading, and transporting wood and charcoal can result in running over individual acuña cactus and causing injury or mortality of plants, if such actions occur in areas supporting the acuña cactus. Also, human population growth and development in the border region between the United States and Mexico has risen in recent decades (Brown and Caldwell 2008, pp. 1–6); it is reasonable to conclude that the direct and indirect effects of urbanization are likely to increase threats to the acuña cactus populations in this region. The populations are currently split by a major highway, Interstate 8, and a power transmission line; many plants occur within 200 m (660 ft) of these corridors (Pate 2011, map 1 and map 2).

In summary, the direct and indirect effects of urbanization are threats to a portion of the known populations of the acuña cactus. However, these effects are currently limited to the acuña cactus populations in the vicinity of Ajo and Florence in the United States and in the immediate border region of Sonora, Mexico. These areas collectively make up less than 21 percent of known living acuña cactus individuals across the range of the acuña cactus. The majority of the range in the United States is protected from urban development because populations are on Federal lands, where little or no development will take place. In addition, most populations of the acuña cactus are relatively remote or otherwise protected from the effects of urbanization. We conclude that urban development and site degradation is not currently a threat to any entire population of the acuña cactus. As a result, based on our review of the available information, we conclude that the direct and indirect

effects associated with urbanization are not threats to the acuña cactus and its habitat.

Livestock Grazing

In general, grazing practices can change vegetation composition and abundance and cause soil erosion and compaction, reduced water infiltration rates, and increased runoff (Klemmedson 1956, p. 137; Ellison 1960, p. 24; Arndt 1966, p. 170; Gifford and Hawkins 1978, p. 305; Waser and Price 1981, p. 407; Robinson and Bolen 1989, p. 186; Holechek *et al.* 1998, pp. 191–195, 216; and Loftin *et al.* 2000, pp. 57–58). These anticipated effects leave less water available for plant production (Dadkhah and Gifford 1980, p. 979). In addition, livestock can step on or knock over individual acuña cactus. Although other species of cacti may be good survival forage for livestock (Vega-Villasante *et al.* 2002, p. 499), herbivory of the acuña cactus has not been reported. Livestock grazing levels and habitat condition vary greatly between populations due to varied land ownership and management. A discussion of populations arranged by land management agency follows.

National Park Service—Beginning in the early 1900s and continuing through the 1970s, lands within OPCNM were grazed heavily, with as many as 3,000 head of cattle and hundreds of burros present at a time when carrying capacity was estimated to be 314 cattle per year (Rutman 1997, p. 364; NPS 2011b, entire). Grazing by domestic animals was halted per NPS policy and has not occurred within OPCNM since 1976 (NPS 1997, p. 33). Lands here continue to recover slowly after loss of soils and vegetation and may take many decades or centuries to recover fully (NPS 2001, pp. 27, 124). Currently, OPCNM supports the largest population of the acuña cactus (59 percent of known living acuña cactus individuals), and we are not aware of historical effects to the population as a result of past livestock grazing.

Bureau of Land Management—All four populations of the acuña cactus on BLM lands in the Sauceda Mountains have been managed since 1988 in the Coffeepot ACEC, which attempts to apply grazing management practices to ensure perpetuation of botanical diversity within the area and prohibits the development of livestock facilities that would serve to increase livestock use within the area (BLM 2011, p. 141). Collectively these four populations make up 13.1 percent of known living acuña cactus individuals. In 1987, when speaking of the then proposed Coffeepot ACEC, Olwell (1987, p. 1) noted relatively pristine conditions with no immediate threat to the acuña cactus plants. At that time, however, the population of acuña cactus within the Coffeepot ACEC in the vicinity of permanent monitoring plots was reported to have substantial animal activity from cattle, javelina, and jackrabbits, with browsing, grazing, and soil disturbance noted (Rutman *et al.* 1987, p. 2). Anderson (2011, entire) noted no habitat impacts from grazing in this population during yearly visits from 1994–2011. This population is the farthest population from a single cattle tank (see below) within the ACEC, and therefore is less subjected to livestock pressure.

In 1970, a cattle tank named Conley Reservoir was established within the Coffeepot ACEC boundary prior to the ACEC designation and remains today (Foreman 2012, pers. comm.). A population of acuña cactus very near this tank was visited by the BLM botanist in 2010, who found abundant prickly pear (*Opuntia* spp.), which are known to increase with disturbance and are often cited as an indicator of poor range condition (Anderson 2011, p. 2; Johnson 2000, entire). A site visit in 2011 by Service and BLM botanists found habitat impacts such as soil disturbance from both cattle and feral burros; however, no acuña cactus plants appeared to be directly impacted by these animals (Service 2011a, p. 3). Feral burros also impact vegetation on neighboring military lands (see *Department of Defense* section below).

The new BLM Draft RMP/EIS has implications for future livestock management within the Coffeepot ACEC and the Sonoran Desert National Monument (BLM 2011, entire). According to this document, under Alternative A (the no action alternative), livestock grazing within the ACEC would not change from the current regimes with no livestock facility development permitted (BLM 2011, pp. 32, 141). Under Alternative B, livestock grazing only in times of suitable forage production (ephemeral) would continue to be considered, but perennial stocking rates would be reduced by approximately 40 percent, and no livestock facilities would be developed that would increase livestock use within the area (BLM 2011, pp. 33, 196). Under Alternative C, grazing allotments designated as perennial/ephemeral would be reclassified as perennial only, with no supplemental ephemeral grazing applications considered (BLM 2011, p. 34). Under Alternative D, all allotments currently open to grazing would become unavailable as permits expire (BLM 2011, p. 35). Under Alternative E, the BLM's preferred alternative, current grazing levels and timing would remain the same, but livestock facilities could be developed with the aim of improving natural resource conditions through greater distribution of livestock (BLM 2011, p. 171). It is unclear if additional tanks would, as is implied, relieve pressure on the acuña cactus populations; it is also unclear if this would increase the overall number of cattle (or burros) in the area or the amount of land impacted, thus potentially impacting more acuña cactus populations. Whichever alternative is ultimately chosen, the finalized version of this management plan will remain in effect for 15 to 20 years after signing later in 2012 (Foreman 2011, pers. comm.).

In 2001, Presidential Proclamation 7397 (Clinton 2001, entire) created the Sonoran Desert National Monument; one population of acuña cactus containing 5.9 percent of known living acuña cacti occur in the Sand Tank Mountains. This area was designated for military purposes in 1941, and has had no livestock grazing for over 60 years (Clinton 2001, p. 2). During a site visit in 2006, no habitat impacts from livestock were reported from this location (Anderson 2011, p. 2). The current livestock management regime of no livestock being permitted within the Sonoran Desert National Monument Sand Tank Mountains acuña cactus population will be maintained for at least the next 15 to 20 years (BLM 2011, pp. 36–40; Foreman 2011, pers. comm.).

Department of Defense—A single acuña cactus plant was found on BMGR approximately 1 km (0.62 m) to the north of a known population within the BLM Coffeepot ACEC (Geraghty *et al.* 1997, p. 5). Livestock grazing is not authorized on the BMGR, though some trespass cattle do occur (Whittle 2012, pers. comm.). Feral burros on BMGR are a concern, however, and BMGR managers plan to implement a burro trapping program in the spring of 2012, in an attempt to reduce damage to vegetation (Whittle 2012, pers. comm.).

Arizona State Trust Lands (State land)—Populations of acuña cactus on State land in the Mineral Mountains are subject to grazing; two land sections containing this species are collectively part of a larger 6,118-ha (15,118-ac) grazing lease with a total carrying capacity of 118 animal units (Sommers 2012, pers. comm.). Three individual acuña cacti from this group of populations overlap onto adjacent BLM land. This BLM land, which is not fenced from adjacent State land, has a total permitted number of cattle of 357 year long, though the lessee did not run

the full amount of animals in 2011 (Tersey 2012, pers. comm.). During a 2011 site visit, the habitat appeared unaltered by livestock, and no cattle were seen (Service 2011b, p. 1).

Three additional land sections near Box O Wash containing this species are collectively part of a lease of 12,369 ha (30,565 ac) with a total carrying capacity of 236 animal units (Sommers 2012, pers. comm.). Both leases incorporate State and BLM lands, although in this area the species has been found on State lands and not the associated BLM lands. No livestock were seen during the November 2011 site visit to this population (Service 2011b, p. 3). Only two dead individual acuña cacti were found, and neither appeared to have been knocked over by cattle (Service 2011b, p. 3). In the past, Rutman and Krausman (1988, p. 1) recommended that this State land habitat could benefit from improved livestock management, as cattle trails there were numerous during a 1988 site visit. In a 2008 site visit, it was noted that quite a few of the dead acuña cactus plants may have been knocked over by livestock (Service 2008b, p. 1). It is unknown what the grazing lease or animal units were for this period of time. In 2011, several individuals were noted to have grown additional arms following the loss of the growing tip (Service 2011b, pp. 3–4). This was possibly due to mechanical damage caused by cattle, a beneficial adaptation to disturbance noted previously by Phillips *et al.* (1982, p. 6). The populations on State land represent just 0.9 percent of known living acuña cactus individuals. Although livestock grazing on State lands may benefit from improved management, the impacts to the acuña cacti are small.

Private—Populations of the acuña cactus on private lands near the town of Ajo were noted to occur in degraded habitat with low species richness; these sites were suspected to have had a grazing history of severe use (Rutman 1995, p. 1). Those acuña cacti on private lands near Florence are in an unknown condition, as they are not typically visited by Service staff. Two roadside populations visited in 2011 had four dead plants and 13 healthy plants collectively; all dead plants seemed to have died from drought or insect attack, although one population did contain evidence (feces) of cattle use (Service 2011b, p. 2). Private lands account for just 1.4 percent of known living acuña cactus individuals.

Mexico—In Mexico, researchers report livestock grazing in parts of the Sonora range (Stoleson *et al.* 2005, p. 60), but mostly the habitat remains little-used and unoccupied land (Pate 2011, pers. comm.). Sonora maintains 19.4 percent of the known acuña cactus individuals across the range; their recent decline, as evidenced by nearly 1,000 dead plants counted in 2010, has not been attributed to livestock.

In summary, 64.9 percent of acuña cactus individuals occur within lands protected from cattle grazing either by NPS or BLM National Monument status. In areas occupied by the acuña cactus where livestock grazing does occur, impacts from livestock do not appear to be a consistent or significant threat to populations. Based on our review of the available information, we conclude that, although there is evidence that grazing impacts to the acuña cactus do occur, we do not believe that these effects occur to such an extent that livestock grazing is a threat to the acuña cactus and its habitat.

Border Activities

Over the past decade or more, tens of thousands of people illegally attempt crossings of the U.S.-Mexico border into Arizona annually (cross-border violators) (Service 2011c, p. 14). As a result of increased U.S. Customs and Border Protection (CBP) in the Douglas, Arizona, area, and in San Diego and southeastern California, cross-border violator traffic has shifted into remote desert areas such as OPCNM (Service 2011c, p. 14). For example, in 2001, an estimated 150,000 people entered OPCNM illegally from Mexico (Service 2011c, p. 14). With the increase in technology, border fencing, and manpower between 2001 and 2012, these numbers are down considerably, with 6,218 arrests of cross-border violators from OPCNM in the year 2011 (Oliver 2012, pers. comm.). Although the number of arrests does not represent all those who attempted to enter OPCNM illegally, this number is suspected to be considerably less than reported in 2001. Despite the fact that these numbers are down due to enforcement and deterrence efforts by the CBP, the thousands of people crossing through the border area illegally still represent a substantial impact to the resource.

More than 78 percent of the known living acuña cactus individuals occur within 16.5 km (10.25 mi) of the border in either OPCNM or Sonora, Mexico. Cross-border violators, CBP, and NPS Law Enforcement (LE) activity in this area may degrade acuña cactus habitat by creating new roads and trails, disturbing vegetation and soils, and moving exotic plant seeds or plant parts, leading to their spread into unoccupied areas (Duncan *et al.* 2010, p. 124). At OPCNM, the acuña cactus occurs in an area that is closed to visitors due to dangers of drug and human smuggling; in addition, for many years, OPCNM natural resource staff have not been allowed to access the area without LE personnel accompanying them. Significant impacts may occur when travel moves off existing roads causing vegetation destruction, soil compaction (Duncan *et al.* 2010 p. 125), and, potentially, direct mortality of the acuña cactus by running over individuals, although no direct impacts to acuña cactus have been observed. Staff at OPCNM note that roughly 2 years ago, two vehicle tracks and associated articles of clothing from cross-border violators were found within one of the six 20 by 50 m (66 by 164 ft) acuña cactus long-term monitoring plots (Holm 2012a, pers. comm.). Although no individual plants were reported to have been run over in this instance, the occurrence of the activity within this proximity to acuña cactus individuals supports our conclusion that impacts from cross-border violators and border enforcement may negatively impact the species and could be a threat.

In 2006, a vehicle border fence was completed in OPCNM. This fence has significantly reduced vehicular traffic from illegal entrants. The Biological Opinion for the Ajo Forward Operating Base Expansion reported personal observations by NPS and Service employees that the number of off-road tracks and new roads continues to increase (Service 2011c, p. 19). These new off-road tracks and roads are believed to be the result of CBP response by vehicle, horseback, and foot to cross-border violators, who are travelling primarily on foot (Service 2011c, p. 19). By 2011, OPCNM personnel had mapped thousands of miles of unauthorized off-road impacts from cross-border violators, CBP, and LE activities (Service 2011c, p. 18). Staff at OPCNM has been compiling data on off-road traffic and mapping unauthorized roads on OPCNM for a report. Prior to finalizing the determination on listing the acuña cactus, this report will have been completed and will be considered in the final determination. Although most of the unauthorized roads were created prior to construction of vehicle and pedestrian fences along the U.S.—Mexico international border, it is not known if the additional roads were created after the construction of the border fences. In 2011, NPS staff noted no new heavily utilized routes due to off-road travel by vehicles, but staff did state that single vehicles drive across habitat, and individual acuña cactus plants may be driven over. There is no

evidence that acuña cacti have been harmed, but damage to larger plants has been documented due to similar activity (Rutman 2011, pers. comm.). In cooperation with Service staff, CBP has begun efforts to educate Border Patrol agents on the locations and appearance of acuña cactus so that the areas that support the plant can be avoided to the maximum extent possible. Designated critical habitat in OPCNM will be marked on road atlases being prepared by OPCNM staff and provided to the agents patrolling in the OPCNM area.

A system of sensors and communication towers is currently in place and is being expanded within the border region; this technology improves deterrence, detection, and apprehension of cross-border violators entering or attempting to enter the United States illegally (Service 2009, p. 5). It is expected that with increased communication and sensor tower technology, there will be a reduction in the need for CBP agents to patrol the area, thus reducing circumstances requiring vehicles to drive off of authorized roads (Service 2009, p. 16). CBP agents on foot or on horseback may conduct off-road pursuit of suspected cross-border violators at any time, including in areas designated or recommended as wilderness (Service 2009, p. 17). However, where there are exigent or emergency circumstances, CBP agents may conduct motorized off-road pursuit of cross-border violators, including in areas designated or recommended as wilderness. Where such motorized pursuits are necessary, CBP has committed to using the least intrusive or least damaging vehicle readily available, without compromising officer or agency safety.

There are no existing or proposed communication towers near any acuña cactus populations within OPCNM; however, human traffic patterns have changed since the installation of towers in and near OPCNM. This change of pattern has created a larger impact footprint due to traffic moving farther from towers. In addition, communication and sensor towers and associated tactical infrastructure require maintenance and repair. Species proposed for listing, such as the acuña cactus, could be directly affected by repair and maintenance of this infrastructure if maintenance vehicles traveled off of approved access routes. However, CBP has committed to use only approved access routes for these maintenance activities. Therefore, these effects would be negligible for acuña cactus. In addition, if these maintenance and repair activities occur in undisturbed areas in the habitat of listed plant species, a survey must be conducted and a sufficient buffer created to protect any plants found (HDR 2012, pp. 4–3).

Illegal drug and human smuggling also adversely affects the area of the Coffeepot ACEC, but the area is less impacted than other border areas (BLM 2011, p. 344). This is likely the case with the other populations on private and BLM lands near Ajo and Florence. Within BMGR, cross-border violators and associated activities represent a significant threat to natural and cultural resources within the BMGR, including having widespread and adverse effects on soil and hydrology (U.S. Departments of the Air Force and Navy 2007, pp. 3–11). We are aware of no instances of illegal activity or law enforcement activity impacting the populations near Florence. The Service (2008b, p. 1) noted that little to no human activity, including ORV use, was observed during a 2008 site visit to these populations.

The acuña cactus populations across the border from OPCNM, in Mexico, occur on land that is little-used, unoccupied, and subject to heavy traffic by drug and human smugglers (Pate 2011, pers. comm.). This area was reported to be not very safe, and warnings were given to Service personnel not to travel to this location alone (Larios 2011, pers. comm.). In 1993, the Mexican government established Pinacate Biosphere Reserve, a 7.7-million ha (1.9-million-ac) reserve for the region's flora, fauna, geology, and archeology preservation. A portion of the acuña cactus individuals in Sonora occur within the Pinacate Biosphere Reserve. It is unknown what, if any, protection this designation provides the acuña cactus.

In summary, the two areas containing the largest number of living acuña cactus (78 percent of the known living acuña cactus individuals) occur along the U.S.-Mexico border (in OPCNM and Sonora, Mexico). Within populations, acuña cacti are typically spaced within 3 m (9.8 ft) of each other, and thus vehicle traffic through any population could potentially impact many individuals. This area is heavily impacted by cross-border violators, CBP, and LE activity, as evidenced by the tremendous increase in illegal roads and trails documented by agencies along the border. To date, no individual acuña cactus plants are reported to have been lost to these activities; however reporting from this area is inconsistent. With anticipated continued border activity in the area, it remains possible that acuña cactus individuals and their habitat will be impacted. These impacts include: creation of new roads and trails; disturbance of associated vegetation including nurse plants and microclimates; compaction or erosion of soils; movement of nonnative, invasive plant seeds and plant parts; and the potential to cause direct mortality to individuals by running over plants with vehicles. Therefore, based on our review of the available information, we conclude that cross-border violators, CBP, and LE off-road activities are a threat to the acuña cactus and its habitat.

Nonnative, Invasive Plant Species

Throughout the Sonoran Desert ecosystem, invasions of the introduced *Pennisetum ciliare* (buffelgrass), *Bromus rubens* (red brome), *Eragrostis lehmanniana* (Lehmann lovegrass), *Schismus barbatus* (Mediterranean grass), and *Pennisetum setaceum* (crimson fountaingrass) have altered nutrient regimes; species composition and structure; and fire frequency, duration, intensity, and magnitude (Brooks and Pyke 2001, p. 5). Although most of these species were intentionally introduced as forage for livestock, as erosion control, or as ornamentals, each is now considered invasive and a threat to this ecosystem (Búrquez-Montijo *et al.* 2002, entire). Species such as buffelgrass are expected to increase their range even with continued and predicted drought events (Ward *et al.* 2006, p. 724). It is generally thought that invasion by exotic annual grasses will continue unchecked in the Sonoran Desert ecosystem in the future, reducing native biodiversity through direct competition and alteration of nutrient and disturbance regimes (Franklin and Molina-Freaner 2010, p. 1671).

Herbarium sheets contain labels that give information regarding where a specimen was collected, by whom, when the collection was made, and additional information such as what plant species were found in association with the collected specimen. There are no exotic species noted as associates on 39 of the 40 acuña cactus specimen herbarium sheets located at the Arizona State University, University of Arizona, or San Juan College Herbarium collections (ARIZ 2011, entire). These collections cover the range of the acuña cactus and date from 1952 through 2009. There was one specimen collected in 1982 that lists the exotic annual red brome grass as an associate. Although crimson fountaingrass found on nearby property was reported to be a possible threat to the acuña cactus near Ajo (Falk 2005, pers. comm.), no exotic grasses were noted within the Ajo, Little Ajo Mountains, or Coffeepot ACEC habitats

during field surveys in October 2011 (Service 2011, p. 4). One researcher familiar with all known populations of the acuña cactus noted no associated threats from exotic plant species in any population (Baker 2011, pers. comm.). In addition, researchers at OPCNM noted no present threats from any exotic plant species either within OPCNM or in populations of the Sonoran Desert National Monument (Rutman 2011, pers. comm.).

In summary, we have reviewed the available information on the effects of and occurrence of nonnative, invasive plants in or near populations of the acuña cactus in southern Arizona and in Mexico. Known populations of the acuña cactus are well distributed across southern Arizona and northern Sonora and occur in areas subject to effects from nonnative, invasive plant species. However, there are no populations of the acuña cactus that currently show evidence of effects from nonnative, invasive species, and just one 1982 report indicates the presence of an exotic plant as an associate of the acuña cactus. While nonnative, invasive species could negatively impact this species, our review of the best available information indicates nonnative species do not co-occur with the acuña cactus presently; therefore we conclude nonnative, invasive species do not pose a threat to the acuña cactus and its habitat.

Mining

The immediate threats from mining activity include the direct loss of individuals and habitat. Indirect impacts of mining activity include fragmentation of acuña cactus and associated pollinator populations, which can reduce genetic vigor of the cactus and result in degradation and fragmentation of habitat and dusting of individual cacti adjacent to mines and associated roads. The acuña cactus populations in OPCNM and the Sonoran Desert National Monument are protected from the immediate threats associated with mining due to their National Monument status (NPS 1997, pp. s–iii; BLM 2011, p. 12). Currently on the Coffeepot ACEC, mineral exploration and mining are encouraged (BLM 1988, pp. 55 and 71). The 2011 Draft RMP/EIS for the Sonoran Desert National Monument proposes to continue the mining closure within the Sonoran Desert National Monument (BLM 2011, p. 181). However, within this same document, alternatives outlined for the Coffeepot ACEC allow for mining activities, but with various restrictions depending on the alternative selected. Because mining of metallic and nonmetallic minerals will continue to be allowed within the Coffeepot ACEC under the revised Draft RMP/EIS (BLM 2011, pp. 154, 155, 196, 197), there is the continued potential for some loss of individual acuña cactus and fragmentation of acuña cactus and associated pollinator populations and habitat. There are no known mining activities planned on BLM properties, though a BLM parcel adjacent to populations on State lands near Florence may host a gravel mining operation in the future (Service 2011b, p. 1).

Mining activity on private land near Ajo has a long history; the New Cornelia copper mine was one of the first open pit mines in Arizona dating to 1854 (Arizona Mining Association 2011, entire). This mine was closed in 1985, and a 2008 investigation by company owners determined the mine would not be reopened due to current economic conditions (Ajo Copper News Oct 29, 2008). As of 2012, the mine remains closed.

The small populations of the acuña cactus that remain in Ajo may have been part of a much larger population that occurred before mining activity began, but there are no survey records for this species in the area prior to mining activity. As a result, it is unclear to what extent the acuña cactus and associated habitat were removed due to historical mining in this area, but there was certainly some loss of individual acuña cactus and habitat. Rutman (1995, p. 1) noted that on the east side of the Ajo rock dump, roads, wells, prospecting holes, rock piles marking mining claims, and past use of explosives occurred immediately adjacent to the acuña cactus plants. Rutman (2006, p. 1) noted that habitat was lost when Indian Hill Village Road was built and that occupied habitat may also have been lost where the following buildings and infrastructure now occur: Assembly of God Indian Mission, New Cornelia mine, parking lot for the mine lookout, baseball diamond, and the large informal parking lot to the north of the hill. It is possible that these populations were at one time connected with the few plants to the southeast of the open pit mine on BLM land. There is little doubt that the historical size and range of the Ajo area populations of acuña cactus have been reduced.

Mining threats on private lands near Florence are unknown. Threats from mining to the acuña cactus plants in Mexico are unknown.

We are aware of no acuña cactus populations that are currently impacted by active mining. It is reasonable to project that some mining will occur in the future that could affect acuña cactus populations near Florence, Ajo, and in the Coffeepot ACEC. However, these effects will occur in limited areas that do not support a majority of known individual acuña cactus. The acuña cactus populations will remain well distributed across their range even if future mining activities affect a few populations. Therefore, based on our review of the available information, we conclude that current and future mining activity is not a threat to the acuña cactus and its habitat.

Drought and Climate Change

Our analyses under the Act include consideration of ongoing and projected changes in climate. The terms ''climate'' and ''climate change'' are defined by the Intergovernmental Panel on Climate Change (IPCC). ''Climate'' refers to the mean and variability of different types of weather conditions over time, with 30 years being a typical period for such measurements, although shorter or longer periods also may be used (IPCC 2007, p. 78). Thus, the term ''climate change'' refers to a change in the mean or variability of one or more measures of climate (e.g., temperature or precipitation) that persists for an extended period, typically decades or longer, whether the change is due to natural variability, human activity, or both (IPCC 2007, p. 78). Various types of changes in climate can have direct or indirect effects on species. These effects may be positive, neutral, or negative, and they may change over time, depending on the species and other relevant considerations, such as the effects of interactions of climate with other variables (e.g., habitat fragmentation) (IPCC 2007, pp. 8–14, 18–19). In our analyses, we use our expert judgment to weigh relevant information, including uncertainty, in our consideration of various aspects of climate change.

Climate change will be a particular challenge for biodiversity because the interaction of additional stressors associated with climate change and current stressors may push species beyond their ability to survive (Lovejoy 2005, pp. 325–326). The synergistic implications of climate change and habitat fragmentation are the most threatening facet of climate change for biodiversity (Hannah *et al.* 2005, p. 4). Current climate change predictions for terrestrial areas in the Northern Hemisphere indicate warmer air temperatures, more intense precipitation events, and increased summer continental drying (Field *et al.* 1999, pp. 1–3; Hayhoe *et al.* 2004, p. 12422; Cayan *et al.* 2005, p. 6; Seager *et*

al. 2007, p. 1181). Climate change may lead to increased frequency and duration of severe storms and droughts (Golladay *et al.* 2004, p. 504; McLaughlin *et al.* 2002, pp. 6072–6074; Cook *et al.* 2004, p. 1015).

The current prognosis for climate change impacts in the American Southwest includes fewer frost days; warmer temperatures; greater water demand by plants, animals, and people; and an increased frequency of extreme weather events (heat waves, droughts, and floods) (Weiss and Overpeck 2005, p. 2074; Archer and Predick 2008, p. 24). How climate change will affect summer precipitation is less certain, because precipitation predictions are based on continental-scale general circulation models that do not yet account for land use and land cover effects or regional phenomena, such as those that control monsoonal rainfall in the Southwest (Weiss and Overpeck 2005, p. 2075; Archer and Predick 2008, pp. 23–24). Some models predict dramatic changes in southwestern vegetation communities as a result of climate change (Weiss and Overpeck 2005, p. 2074; Archer and Predick 2008, p. 24), especially as wildfires carried by nonnative plants (e.g., buffelgrass) potentially become more frequent, promoting the presence of invasive, exotic species over native ones (Weiss and Overpeck 2005, p. 2075). The Sonoran Desert has experienced drought conditions since 1998 (Bowers 2005, p. 421; WRCC 2012, entire). Recent trends for the region predict that climate of the region will become much drier in the next 2 to 3 decades (Schwinning *et al.* 2008, p. 14–15). The impact of current and future drought, which may be long-term and severe (Seager *et al.* 2007, pp. 1183–1184; Archer and Predick 2008, entire), will continue to affect the acuña cactus and its habitat throughout its range.

Climate change is likely to affect the long-term survival and distribution of native plant species, such as the acuña cactus, through changes in temperature and precipitation. Over the past 40 to 50 years, the United States has experienced more extreme weather events, heat waves, and regional droughts than in previous decades (Karl *et al.* 2009, p. 27). The southwestern United States has experienced the greatest temperature increase in the continental United States; average temperatures increased approximately 0.8 degrees Celsius (°C) (1.5 degrees Fahrenheit (°F)) compared to a 1960 to 1979 baseline (Karl *et al.* 2009, p. 129). By the end of this century, temperatures averaged across the Southwest region are expected to warm a total of 2 to 5 °C (4 to 10 °F) above the historic baseline period of 1960–1979 (Karl *et al.* 2009, p. 129). The frequency and intensity of high temperature extremes will increase, and heat waves currently considered rare will become more common (Karl *et al.* 2009, pp. 33–34). This region has experienced drought conditions since 1998 (Bowers 2005, p. 421; Western Region Climate Center (WRCC) 2012, entire). Annual mean precipitation levels are expected to decrease in western North America and especially the southwestern States by midcentury (IPCC 2007, p. 8; Seager *et al.* 2007, p. 1181; Girvetz *et al.* 2009, entire). The current trend in the Southwest of less frequent, but more intense, precipitation events leading to overall drier conditions is predicted to continue (Karl *et al.* 2009, p. 24). The levels of aridity of recent drought conditions and perhaps those of the 1950s drought years will become the new climatology for the southwestern United States (Seager *et al.* 2007, p. 1181). In summary, the drought the southwestern United States has been experiencing since the late 1990s is the worst in over 100 years and is being exacerbated by record warming (Karl *et al.* 2009, p. 130).

Heat stress in adult cacti is minimal compared to other plant species as they are able to survive heat stress due to both morphology and metabolism (Smith *et al.* 1984, pp. 647, 650; Wahid *et al.* 2007, p. 199). In a study of Sonoran Desert cacti, Smith *et al.* (1984, pp. 647, 650) found that short cacti (such as the acuña cactus) and massive cacti had higher heat tolerance than most other cacti species studied, and more than vascular plants overall. They also found heat tolerance varied with stem orientation, stem diameter, and location on the landscape including a portion of the species' range (Smith *et al.* 1984, p. 649). Extreme temperatures can, however, negatively impact seedling survival in many Sonoran Desert plants, and drought coupled with high temperatures lessens temperature tolerance in seedlings (Nobel 1984, pp. 310, 316). We found no additional information on projections for cacti in general, or the acuña cactus in particular, indicating the impacts of increased heat stress combined with increasing drought stress as climate models project. We do know, however, that drought or high temperatures alone can damage non-cacti species, and the combination causes more detrimental interactive effects on these plants than either stressor independently (Huang and Jiang 2002, p. 288).

We are aware of several reports of drought stress apparent on individual acuña cactus. In cacti and other succulents, stem swelling and shrinking is typical with rain–drought cycles (Mauseth 2000, p. 1107). At OPCNM, monitored acuña cactus individuals were reported to have shrunk in size from one year to the next, and researchers noted shrinking individuals may be dying (Ruffner 1989, p. 1). In addition, 1986 datasheets from monitoring plots at OPCNM categorized cacti based on health of the individual; one category from the time was ''desiccated'' (dried out) (Buskirk 1986, pers. comm.). Although such descriptive categories have not been in use in monitoring for some time, OPCNM staff note their importance and would like to reinstate them in future monitoring (Holm 2012b, pers. comm.). In addition, plants already stressed from prolonged drought are more susceptible to insect attack and disease (Mattson and Haack 1987, p. 110), and such attack is prevalent in all acuña cactus populations across their range (see discussion in *Factor C. Disease or Predation*). Mortality in measured plots at OPCNM was most severe in 1993, when 40 adults were lost, and again in 1997, when 53 adults were lost; both of these were years with dry summers (WRCC 2012, entire). In the last decade, 78 adults were lost in these plots, and 25 of these losses occurred in the very dry year of 2007 (WRCC 2012, entire). During this same 10-year period, 31 new adults were recorded as additions to the population through recruitment (NPS 2011a, p. 2).

In addition to the health of adult individuals, drought is directly related to acuña cactus population health with regard to reproduction and establishment. In his 3-year study of the reproductive ecology of the acuña cactus, Johnson (1992, pp. 403, 405) concluded that the positive association of rainfall and annual variation in the number of flowers produced indicates that water availability limits flower production in this species. Although Johnson cites yearly precipitation in relation to flower production, it seems more likely that winter precipitation is the driving factor, as flowers are produced early in the spring following winter precipitation events. Within monitoring plots established by Buskirk in 1977 (Buskirk 1981, p. 1), total flowers counted peaked at 902 in 1992 (Holm 2006, p. 10); corresponding precipitation during the winter of 1992–1993 was 29.7 cm (11.66 in) (WRCC 2012, entire). By comparison, in the last 10 years of measurement, the average number of flowers counted in these plots was 198 (Holm 2006, p. 10); the corresponding average winter

precipitation during these years was 9.7 cm (3.8 in) (WRCC 2012, entire).

Resource limitation may affect the acuña cactus seed set through ovule abortion (Johnson 1989, p. 11). Because flowering commences in early March and fruiting commences in late April (Johnson 1989, pp. 5, 8), it is likely also that winter precipitation is correlated with fruit set. Fruit production was monitored at the OPCNM plots beginning in 2004, and has shown considerable variation since that time, with a low of 29 fruits produced in 2007, when total winter precipitation was 6.8 cm (2.69 in) and, a high of 361 fruits produced in 2005, when winter precipitation was 16.4 cm (6.47 in) (NPS 2011a, p. 1; WRCC 2012, entire).

Johnson (1989, pp. 5, 12) determined that acuña cactus seedling survival was dependent on summer precipitation and that soil moisture availability limits the distribution of the species. Rice (2001, pers. comm.) noted that in greenhouse trials of the acuña cactus, seedlings and new recruits were primarily lost due to desiccation; emphasizing that establishment is the most critical and limiting phase of the acuña cactus life cycle. Throughout the species' range, rainfall has been declining, and drought conditions have been dominant since 1998 (Bowers 2005, p. 421; WRCC 2012, entire); this has likely influenced seedling survivorship (Holm 2006, p. 2–1—2–13; NPS 2011a, p. 1). For example, in the measured plots at OPCNM, the recruitment rate peaked in 1992, coinciding with consecutive seasons with near to above average rainfall (NPS 2011a, p. 1; WRCC 2012, entire). In the Coffeepot Mountain BLM monitoring plots, seedling or juvenile plants were observed in all years when plots were measured; however, the number of dead plants far exceeded recruitment in any year (Butterwick 1982–1992, entire). In many site visits throughout the region over the past 10 years, there have been reports of low or no recruitment (Service 2008a, p. 1; Service 2008c, p. 1; Anderson, 2011, p. 2; Service 2011a, entire; Service 2011b, p. 3).

In summary, since the late 1990s, the southwestern United States has been experiencing drought conditions and increasing high temperatures. Climatic predictions suggest continued less frequent, but perhaps more intense, summer precipitation, reduced winter precipitation; and increasing temperatures in this region (Seager *et al.* 2007, p. 1181; Archer and Predick 2008, pp. 23–24; Karl *et al.* 2009, p. 24). Data from the acuña cactus monitoring plots at OPCNM and at Coffeepot Mountain, along with occasional surveys of these and most other populations, indicate major population declines have occurred across the acuña cactus range over the past 30 years. It appears that a combination of drought stress, warmer winters, and insect attack (see *Factor C. Disease or Predation,* below) have reduced adult plant numbers, while heat stress, lack of precipitation, and seed predation (see *Factor C. Disease or Predation,* below) have combined to reduce or halt reproduction. Because the current drought is occurring on a regional scale, and because climatic models predict future regional droughts, it is likely that all populations of the acuña cactus will continue to decline due to drought and the effects of climate change. In addition, it appears that drought and climate change in combination with insect damage and predation, as a combined effect, is the more likely scenario for rangewide level impacts to acuña cacti (see *Factor C. Disease or Predation,* below). Most, if not all, of the acuña cactus populations are impacted by drought and the effects of climate change, including effects to both individual cacti and to productivity and establishment. Therefore, based on our review of the available information, we conclude that drought and the effects of climate change, combined with insect predation (see *Factor C. Disease or Predation,* below), rise to a rangewide level threat.

Summary of Factor A

In conclusion, based on our review of the best available information, we have determined that individual plant loss, as well as fragmentation of acuña cactus and associated pollinator populations due to the effects of urbanization; livestock grazing; nonnative, invasive plant species; and mining do not impact the species at a population level and therefore are not threats to the acuña cactus. Currently, 78 percent of the known living acuña cactus individuals occur along the border near OPCNM. Cross-border violators and associated CBP and LE off-road activities may be affecting individual acuña cactus plants and their habitat. If there is an increase in off-road activities in or near acuña cactus populations or habitat, the likelihood of loss of individuals or loss or modification of habitat also increases. In addition, a large amount of mortality has been documented within all populations that have been visited more than once, relating to a combination of the intricately correlated increases in drought and heat stress, warmer winter temperatures, and insect attack (see *Factor C. Disease or Predation,* below). Thus, based on our review of the best available scientific information, we conclude that loss and degradation of habitat due to off-road border activities, drought, and climate change, are threats to the acuña cactus and its habitat.

Factor B. Overutilization for Commercial, Recreational, Scientific, or Educational Purposes

Unauthorized collection has, in the past, been identified as a threat to the acuña cactus (Phillips *et al.* 1982, p. 9; Phillips and Buskirk 1982, p. 2; Rutman 1996a, pers. comm.; Rutman 2007, p. 6). At OPCNM, a large number of individuals are located adjacent to Puerto Blanco Drive, which was formerly a scenic loop drive. Although historically collection is suspected to have occurred in this population (Buskirk and Phillips 1983, pers. comm.; Rutman 1996a, pers. comm.), the significance of this past collection varies. Buskirk (1981, p. 5) noted that he did not believe collection was a significant source of mortality between 1977 and 1981, yet Phillips and Buskirk (1982, p. 2) noted three mapped roadside cacti lost to collectors, stating that collecting could be a significant cause of loss in OPCNM. Additionally, Rutman (1996a, p. 2) noted that along the scenic drive road at OPCNM, considerable collection of the largest size class of plants occurred. This road was closed to visitors in 2003, and there are no plans to reopen it, making it highly unlikely that collection is an ongoing issue (Rutman 2011, pers. comm.; Pate 2012a, pers. comm.).

On BLM-administered lands, the acuña cactus plants occur in very remote locations, and no reports of collection are known. Rutman (1995, p. 2) noted collection did not appear to be a threat to the population surrounding the Coffeepot Mountain plots during annual visits between 1988 and 1990. Similarly, no evidence of collection was seen during 2011 Service and BLM site visits to nearby populations within the Coffeepot ACEC (Service 2011a, p. 4).

On State and private lands in the Florence area, Rutman (1995, p. 3) noted that population locations were published and, easy to access, and that, for many years, collectors have been taking plants. She also noted individual plants seen the previous year were missing, and no carcasses found upon revisiting (Rutman 1995, p. 3). No evidence of collection from visited sites was found during 2011 Service visits (Service 2011b, p. 1). Private lands in the Ajo area are also accessible, though we have no reports of collection there.

Buskirk and Phillips (1983, pers. comm.) refer to some acuña cactus collection, but refer to it as relatively uncommon and unsystematic at present. No documented cases of unauthorized

collection (in violation of the Arizona Native Plant Law) of this cactus have been found in any of the known populations. Heil and Melton (1994, p. 15) note that the acuña cactus is easy to grow and raise from seed and that species is rare in the gardens of cactus collectors. An investigator within the Office of Special Investigations of the Arizona Department of Agriculture stated that he does not believe collection of the acuña cactus is a threat to the species (Reimer 2011, pers. comm.). Therefore, based on our review of the available information, we conclude that, while there is evidence that unauthorized collection of the acuña cactus did occur in the past, it occurs to such an insignificant extent currently that it is not a threat to the acuña cactus, nor do we expect it to become a threat in the future.

Factor C. Disease or Predation

In general, cacti are susceptible to attacks from numerous types of insects, and the acuña cactus is no exception. The interior flesh of cacti provides both a nesting area and food source for beetles, weevils, and other insects. Once an infestation has occurred, cacti can die from the eating and tunneling activities or from the introduction of fungus or disease. In addition, drought may cause physiological stress responses in plants, such as limiting their photosynthesis and cell growth. Plants already stressed from prolonged drought are more susceptible to insect attack and disease (Mattson and Haack 1987, p. 110).

There are four native insects that have been documented to impact the acuña cactus. Of these, cactus weevils (*Gerstaeckeria* spp.) and cactus longhorn beetle (*Moneilema gigas*) are documented to be most responsible for the acuña cactus declines (Rutman 2007, p. 6; Johnson 1989, p. 10). Cactus weevils are stem-boring insects; the adults feed externally while the larvae feed internally (Burger and Louda 1995, p. 1560). Cactus longhorn beetle adults feed on pads or terminal buds of cacti; their larvae burrow into stems or roots causing the severing of root and stem, collapse, and death of plants (Kelly and Olsen 2011, p. 7; Johnson 1989, p. 10). Raske 1966 (p. 106) cites Dodd (1927) stating that the cactus longhorn beetle has one reproductive cycle per year; however, a noted cactus expert, Alan Zimmerman, believes that increased warming in recent decades facilitates longer breeding cycles and more reproduction in both the cactus longhorn beetle and cactus weevil (Rutman 2007, p. 6).

Other insects with lesser impact on the acuña cactus are snout moth (*Yosemitia graciella*) larvae and unknown ant species. Snout moth larvae are noted to feed internally on cacti (Simonsen and Brown 2009, entire) and on fruits, thus reducing seed set (Johnson 1992, p. 405). Johnson (1992, p. 405) noted snout moth predation accounted for a reduction in seed set of 35 percent in 50 monitored plants at OPCNM. Ants have been noted in greenhouse conditions and in the wild to consume and transport the acuña cactus seeds (Butterwick 1982–1992, entire; Rutman 1996b, pers. comm.; Rutman 2001, pers. comm., p. 1; Anderson 2011, p. 1). In a similar species, *Coryphantha robustispina* ssp. *robustispina* (Pima pineapple cactus), ants have been documented eating fruits and transporting seeds (Baker 2011, pp. ii, 23). While ants do consume seed, they also scatter seed away from the mother plant thereby reducing predation by small mammals (O'Dowd and Hay 1980, p. 536; Vander Wall *et al.* 2005, p. 802). Ants may also aid in reducing the seedbank of competing plant species (O'Dowd and Hay 1980, p. 539). All of the above-mentioned insects have been documented at OPCNM near or on acuña cactus individuals (Johnson 1989, p. 10; Johnson 1992, p. 405; Rutman 1996b, pers. comm.; Rutman 2001, pers. comm., p. 1), with ants documented at Coffeepot Mountain (Butterwick 1982–1992, entire). It is likely that insect depredation occurs in other populations as well, though studies have not been conducted, and insects have not been collected in these populations. No diseases have been documented in the acuña cactus, though plants are exceptionally susceptible to bacterial rot after minor stem damage (Rutman 2007, p. 3). In 2011 site visits across the species' range, a majority of living adult acuña cacti were in various stages of decline, with stems blackening from the base upward and resulting in eventual cactus death. The cause of this blackening is unknown; it could be natural aging of the plants or the result of stress, insect damage, or disease.

A variety of small mammals, such as native ground squirrels, pack rats, rabbits, and mice, can severely damage or kill both mature and young cacti during times of drought (Kelly and Olsen 2011, pp. 8–9). There have been reports of loss of the acuña cactus due to small mammal depredation evidenced by scattered spines and rooted bases at OPCNM (Buskirk 1981, p. 5; Buskirk and Phillips, 1983 pers. comm.; Heil and Melton 1994, p. 15; Holm 2006, pp. 2–3). It is likely that small mammal depredation occurs in other populations outside of OPCNM as well, though studies have not been conducted and small mammal occurrence in these populations has not been documented.

In 2011, nearly all populations of the acuña cactus on BLM, State, and some private lands were visited by Service staff (Service 2011a, entire; Service 2011b, entire). In every population, some partially living and dead plants were found uprooted and toppled over. In 1996, there was a high mortality event associated with many live, reproductive plants found uprooted and lying on the ground in the Coffeepot Mountain population and the populations around Ajo (Rutman 2007, p. 3). There has been no explanation for this episode; however, there have been various hypotheses including vandalism, thrashers (birds) digging them up, and javelinas uprooting the plants. Given the severing of stem from root commenced when plants had been infested with cactus longhorn beetle, it is entirely possible that episodes of plants falling over occur following peak years for these insects, possibly in association with birds or other animals hearing and attempting to remove the insects within. There were above average temperatures in Ajo the 2 years preceding the 1996 uprooting event; this uprooting may have been correlated to increased insect activity and uprooting. There have been above average annual temperatures recorded at the Ajo Weather Station 15 times during 25 years of record keeping between 1975 and 2010 (WRCC 2012, entire). This trend is consistent both at OPCNM and in Florence, where 21 of 25 recent years and 19 of 25 recent years, respectively, had above average temperatures (WRCC 2012, entire). The increased warming in recent decades is likely benefiting insects and stressing acuña cactus plants, resulting in significantly increased mortality rangewide.

Between 1982 and 1992, both recruitment and mortality were recorded within and outside of the established BLM plots at the Coffeepot Mountain acuña cactus population. Field notes from throughout the 10-year period of study indicate insect damage to individual plants has been ongoing within this population. Field notes included the following comments: tubercles with holes, damage on apex, exposed root, numerous ants, plant dying, insect damage to fruit, hollow inside, uprooted, chlorotic (yellowing), beetle wounds on side, unhealthy, damaged meristem, appears dying at the base, base rotting, sickly, and not rooted (Butterwick 1982–1992). In 1987, the

BLM reported high mortality in this population with more dead plants observed (332) than living (310) (Rutman *et al.* 1987, p. 1). In 1989, the BLM reported a precipitous decline of this population (Johnson 1989, p. 18) with low or no recruitment since that time (Anderson 2011, entire). Within the monitoring plots at OPCNM, datasheets from 1986 categorized cacti as being: uprooted from the base, shell of spines, dead with upright carcass, stepped on, and missing, among others (Buskirk 1986, pers. comm., entire). Within these plots, adult recruitment has been observed in every year of monitoring since 1989; mortality has been observed in all but 2 years during this same period (NPS 2011a, p. 1). On average, the annual adult mortality within these plots is 12 percent, exceeding the annual recruitment of 7.7 percent (NPS 2011a, p. 1). The decrease in reproduction, increase in mortality, or a combination of both have resulted in the decline in plants within (NPS 2011a, p. 1) and outside of the plots at OPCNM. Across this population, the previous estimate of acuña cactus numbers were greater than 10,000 individuals (Buskirk 1981, p. 3); current estimates are between 1,000 and 2,000 plants total (Rutman 2011, pers. comm.).

Within monitoring plots at Coffeepot Mountain, population decline has been dramatic with at least two episodes of 50 percent reductions reported from individuals in and around monitoring plots (Butterwick 1982–1992, entire; Rutman *et al.* 1987, p. 2; Anderson 2011, p. 2; Anderson 2012b, pers. comm.); at OPCNM, there has been a documented decline in the number of individuals on all six monitoring plots in all but 2 years since 1989 (NPS 2011a, p. 1), and in total population estimates between 1981 and 2011 (Buskirk 1981, p. 3; Rutman 2011, pers. comm.). In 2011, site visits to most of the remaining populations on BLM, State, and private lands indicated large proportions of the populations were dead with many plants uprooted, hollow plants, and many individuals in all size classes reported to be unhealthy or blackening from the base (Service 2011a, entire; Service 2011b, entire). Also in 2011, researchers in Mexico reported that 58.8 percent of the 1,601 total plants found were dead (Pate 2012b, pers. comm.).

In conclusion, uprooting and depredation have been ongoing for at least several decades at OPCNM, at Coffeepot Mountain, and in all other populations. The pronounced decline in the acuña cactus numbers over the last three decades documented throughout the species' range on BLM, State, private, and lands in Sonora, Mexico, is of serious concern. It appears that the combination of drought stress and insect attack have reduced adult plant numbers and that warmer winters may be increasing insect numbers attacking acuña cacti. Most, if not all, of the populations are significantly impacted by predation; predation, in the form of insect attacks, occurs throughout the range of the acuña cactus. We also believe that the extent to which this threat affects the acuña cactus populations is interactive with the occurrence of drought and other climatic variables such as warmer winters. The ability of the acuña cactus populations to recover from insect attacks depends on the successful germination and survival of seedlings. However, these populations are also experiencing decreased reproduction, which may render the populations unable to recover as they continue to lose mature individuals, with low levels of seedling recruitment and survival. Therefore, based on our review of the available information, we conclude that predation is a threat that is resulting in significant population impacts to the acuña cactus, and this threat is expected to continue into the future.

Factor D. The Inadequacy of Existing Regulatory Mechanisms

Under this factor, we examine whether existing regulatory mechanisms are inadequate to address the threats to the species discussed under the other factors. Section 4(b)(1)(A) of the Act requires the Service to take into account ''those efforts, if any, being made by any State or foreign nation, or any political subdivision of a State or foreign nation, to protect such species * * *.'' We interpret this language to require the Service to consider relevant Federal, State, and Tribal laws, plans, regulations, cooperative agreements, and other such mechanisms that may minimize any of the threats we describe in threat analyses under the other four factors, or otherwise enhance conservation of the species. We give strongest weight to statutes and their implementing regulations and management direction that stems from those laws and regulations. An example would be State governmental actions enforced under a State statute or constitution, or Federal action under statute.

Having evaluated the significance of the threat as mitigated by any such conservation efforts, we analyze under Factor D the extent to which existing regulatory mechanisms are inadequate to address the specific threats to the species. Regulatory mechanisms, if they exist, may reduce or eliminate the impacts from one or more identified threats. In this section, we review existing State and Federal regulatory mechanisms to determine whether they effectively reduce or remove threats to the acuña cactus.

Regarding the threat of unauthorized collection, the acuña cactus is protected by the Arizona Native Plants Law, which prohibits collection without obtaining a permit on all public lands, and directs that plants may not be moved off of private property without contacting the Arizona Department of Agriculture. Due to the difficulty in implementing this law, it has not been effective in reducing impacts from collection, nor does it protect habitat. However, no documented cases of unauthorized collection of this cactus have been found in any of the known populations in recent decades. There is little threat of collection on private lands due to restricted public access (see Factor B); the majority of the acuña cactus populations are on State and Federal lands. In addition, NPS regulations prohibit the collection or removal of the acuña cactus on NPS lands, where the largest known acuña cactus population occurs. The main road accessing the acuña cactus population in Acuña Valley in OPCNM is closed to the public, thus reducing impacts from collection to this population. Although the remoteness of many populations limits both visitation and enforcement of the existing regulatory mechanisms, unauthorized collection is reported to result in a relatively minor impact to this species. We conclude that the regulations that exist to protect against the impacts from over collection of the species, primarily the NPS regulation prohibiting removal and the closure of the primary access route in OPCNM, are serving to reduce the impacts from collection.

There are no regulations in place that address threats to acuña cactus and its habitat from site degradation or that address the primary threats to acuña cactus of insect predation, drought, and the effects of climate change. Urban development; livestock grazing; nonnative, invasive plant species; unauthorized collection, and mining are not identified to occur at a level that is a threat to acuña cactus populations. However, without management of impacts from these activities, impacts could rise significantly. There are special management prescriptions in place to address some of these concerns on Federal lands. For example, the Sonoran Desert National Monument and OPCNM exclude livestock grazing and mining; promote the reduction of

nonnative, invasive plant species; and are unlikely to support urban development. In Mexico, a portion of the known population is within the boundary of Pinacate Biosphere Reserve, which may afford some protections. While management prescriptions with regard to these stressors may be applied opportunistically across different land management agencies within the region, they do afford some protection and minimize impacts to the species and its habitat.

With respect to threats to the species caused by activities along the U.S.-Mexico border, there are a number of Memorandum of Understanding and Biological Opinion documents that dictate certain actions be taken by CBP to reduce effects to resources in the United States and Mexico border region. These documents are primarily associated with habitat of the federally listed Sonoran pronghorn antelope (*Antilocapra americana* ssp. *sonoriensis*) and off-road activity, specifically identifying sensitive areas to avoid. These Memorandum of Understanding and Biological Opinions do provide some relief from the threats caused to the species resulting from cross-border violators and CBP enforcement activities because the acuña cactus shares a portion of the pronghorn habitat and these documents limit some direct impact to habitat. Likewise, CBP-sponsored projects, including the mapping of off-road tracks and revegetating unauthorized roads, may also benefit the species (Holm 2012a, pers. comm.). In cooperation with Service staff, CBP has begun efforts to educate Border Patrol agents on the locations and appearance of acuña cactus so that areas that support the species can be avoided to the maximum extent possible. Designated critical habitat in OPCNM will be marked on road atlases being prepared by OPCNM staff and provided to the agents patrolling in the OPCNM area. In addition, the efforts of CBP to stop cross-border violators in recent years by means of traffic barriers and other infrastructure has greatly reduced cross-border violator activities and afforded some protection to the habitat. However, due to the difficulty and ever-changing status of border issues, compliance with these agreements has been difficult. Reports indicate a two-track road and associated cross-border violator clothing were found in 2010 within one of the six long-term monitoring plots at OPCNM. The cross-border violator activities are, by their very nature, in violation of the law and regulations. Therefore, we believe that regulations designed to protect the species and its habitat will be generally of little impact to alleviate the threats caused by activities of cross-border violators. As noted above, the interdiction efforts of the U.S. Border Patrol (USBP), including patrols, electronic surveillance and fence construction have contributed to a significant reduction in cross-border violator off-road traffic that has benefited the acuña cactus and other species. However, we do not find regulatory mechanisms to be adequate to directly address these threats discussed in Factor A.

Factor E. Other Natural or Manmade Factors Affecting Its Continued Existence

We have evaluated the best available scientific information, and we did not find any indication of potential threats related to this factor. We considered such threats as small population size and overall rarity of the acuña cactus, but we did not find any indication that these are threats to the species. Therefore, we conclude that other natural or manmade factors are not threats to the acuña cactus.

Proposed Determination for the Acuña Cactus

We have carefully assessed the best scientific and commercial information available regarding the past, present, and future threats to the acuña cactus. We find that the species is in danger of extinction due to the current and ongoing modification and destruction of its habitat and range (Factor A) from long-term drought, effects of climate change, and ongoing and future border activities. The acuña cactus habitat is impacted across its range by long-term drought, warmer winters occurring in the past several decades and projected to continue with climate change, and insect predation. In addition, the majority of the acuña cactus individuals (78 percent) occur within 16.5 km (10.25 mi) of the border in either OPCNM or Sonora, Mexico. As described above, the complexities of addressing off-road excursions by cross-border violators result in unpredictable actions on the part of CBP and LE and threatens acuña cactus and its habitat. The primary threats to the species are due to drought, climate change, and insect predation. These threats are exacerbated at local scales by off-road excursions by cross-border violators and CBP and LE response. We do not find any threats to the species from unauthorized collection (Factor B). We find that predation, in combination with drought and heat stress, exacerbates the threats to this species (Factor C). Although mechanisms are in place that afford some protection to the species and its habitat with regard to potential stressors to the species, there are no regulations in place to address insect predation, drought, and the effects of climate change. With regard to off-road border activity, although the interdiction efforts of CBP, including patrols, electronic surveillance and fence construction have contributed to a significant reduction in cross-border violator off-road traffic that has benefited the acuña cactus and other species, regulations have little impact to alleviate these threats. Therefore, we do not find regulatory mechanisms to be adequate to directly address these threats discussed in Factor A. Finally, we find other natural or manmade factors are not threats to the acuña cactus (Factor E).

The elevated risk of extinction of the acuña cactus is a result of the cumulative stressors on the species and its habitat. Mortality of more than 80 percent of individuals has been documented within populations that have been surveyed more than once. This loss has also occurred on protected lands with ongoing management efforts for the acuña cactus, showing both a rapid and a severe decline to the species. In the acuña cactus, water and heat stress reduce flower and seed production, and seedling survival is dependent on summer precipitation and soil moisture. Warmer and drier winters combined with increased insect attack, negatively impacts the survivorship of reproductive adults. Of the remaining living individuals across the species' range, a large portion were in various stages of deteriorating health, primarily blackening from the base upward, when visited by a botanist in 2011. Across populations, minimal or no recruitment has been seen in recent years. Throughout the species' range, rainfall has been declining, and drought conditions have been dominant for several decades; climate change is anticipated to increase drought periods and warming winters. This combination is expected to continue the documented trend of mortality exceeding recruitment across all populations. When mortality exceeds recruitment in a population, the result is often a declining population. Given this, we consider none of the populations to be stable or secure. The factors significantly threatening the species are not expected to be abated in the foreseeable future, and some populations may have decreased to levels where they are no longer viable. All of the threats, combined with high

levels of mortality and low recruitment in the populations, contribute to a substantial risk of extinction and lead to our finding that the acuña cactus is in danger of extinction throughout its range; therefore, the species meets the definition of endangered.

The Act defines an endangered species as any species that is ''in danger of extinction throughout all or a significant portion of its range'' and a threatened species as any species ''that is likely to become endangered throughout all or a significant portion of its range within the foreseeable future.'' We find that the acuña cactus is presently in danger of extinction throughout its entire range based on rangewide documented rapid loss of individuals, decline in the health of many remaining individuals, little to no recruitment, and continuation of the threats, as described above. Therefore, on the basis of the best available scientific and commercial information, we propose listing the acuña cactus as an endangered species in accordance with sections 3(6) and 4(a)(1) of the Act.

Listing the acuña cactus as a threatened species is not the appropriate determination because the ongoing threats described above are severe enough to create the immediate risk of extinction. The continued loss of reproductive adults and juveniles poses a significant and immediate risk of extinction to the species throughout the species' range, and are not restricted to any particular significant portion of that range. All of these factors combined lead us to conclude that the threat of extinction is high and immediate; thus, we conclude that the acuña cactus meets the definition of an endangered species.

Under the Act and our implementing regulations, a species may warrant listing if it is an endangered or threatened species throughout all or a significant portion of its range. The threats to the survival of the species occur throughout the acuña cactus' range and are not restricted to any particular significant portion of that range. Accordingly, our assessment and proposed determination applies to the species throughout its entire range.

Fickeisen Plains Cactus

It is our intent to discuss below only those topics directly relevant to the listing of the Fickeisen plains cactus as endangered in this section of the proposed rule.

Species Description

The Fickeisen plains cactus is a small, unbranched to occasionally branched, globose (globular) cactus that retracts into the soil after flowering and fruiting. Stems of mature Fickeisen plains cactus are 2.5 to 6.0 cm (1.0 to 2.4 in) tall and up to 5.5 cm (2.2 in) in diameter (Benson 1982, p. 749; Arizona Rare Plant Guide Committee 2001, unpaginated). The stems are covered with tubercles; each tubercle has 3 to 7 radial spines, 4 to 7 millimeters (mm) (0.15 to 0.27 in) in length, and 1 central spine (15 to 18 mm (0.59 to 0.70 in) long) that distinguishes the variety *fickeiseniae* from the variety *peeblesianus* (Benson 1982, p. 765). The central spine is whitish and curved upward. All spines are corky (spongy). The flowers are 2.5 cm (0.98 in) in diameter, cream-yellow or yellowish-green in color, and produced on the apex of the stem. Flowers bloom from mid-April to mid-May, opening in the mid-morning for 1 to 2 days. An entire population generally completes anthesis (the period when the flower is open and functional) in 7 to 14 days (Travis 1987, p. 6), depending on the weather conditions (Navajo Natural Heritage Program (NNHP) 1994, p. 4). Fruits are produced in mid-May, are turbinate (top-shaped), and turn reddish-brown at maturity (AGFD 2011a, p. 1). The seeds are dark brown to black, 3 mm (0.11 in) long, and 2 mm (0.08 in) wide (AGFD 2011a, p. 1). The life span of the Fickeisen plains cactus is estimated to be between 10 to 15 years (Phillips *et al.* 1982, p. 9).

Taxonomy

The Fickeisen plains cactus was discovered near Cameron, Arizona, in the late 1950s, and was described in the scientific literature by Heil *et al.* (1981, pp. 28–31).

The name *Pediocactus peeblesianus* var. *fickeiseniae* had not been validly published. Heil *et al.* (1981, p. 31) recognized the name and taxon in a review of the genus *Pediocactus,* and this name is accepted in the Flora of North America (Heil and Porter 2003, p. 213). Based on these references, we consider *Pediocactus peeblesianus* var. *fickeiseniae* to be a valid taxon. Other synonyms of *Pediocactus peeblesianus* var. *fickeiseniae* that have been used are *Navajoa fickeisenii* and *Toumeya fickeisenii* (Benson 1982, p. 955).

The genus *Pediocactus* contains seven species; six of these are rare endemics of the Colorado Plateau region in Arizona, Colorado, New Mexico, and Utah (Benson 1982, p. 749). There are two recognized varieties of *Pediocactus peeblesianus,* variety *peeblesianus* (Peebles Navajo cactus) and variety *fickeiseniae* (Porter 2002, pp. 15–16). According to Benson, the structural differences exhibited by *Pediocacti* among various sites, coupled with a poor seed dispersal mechanism and specializations to specific geology or soil type, indicate that the existing plants are probably relicts of a once widespread genus with a distribution fractured by climatic conditions (Benson 1982, p. 750).

Biology

The general biology of the Fickeisen plains cactus is similar to other species in the genus *Pediocactus.* The Fickeisen plains cactus is a cold-adapted plant that retracts into the soil during the winter (cold) and summer (dry) seasons, as well as during drought conditions. Plants may be completely buried underground or shrink down into the soil until the crown sits flushed with the soil surface (Phillips *et al.* 1982, p. 4). When temperatures rise in the spring and with adequate rainfall, plants emerge from beneath the surface to flower in mid-April. Spring flowering is believed to be influenced by cold temperatures and precipitation from the preceding winter months (Brack 2012, pers. comm.). After flowering and prior to the summer heat, plants set seed in June and shrink into the soil, losing one-half their height above ground. Some plants may re-emerge in the autumn following monsoonal rains. The length of time a plant remains retracted can vary between individual plants. Hughes (2000a, p. 2) has documented some plants remaining retracted underground for at least 3 years. The Fickeisen plains cactus is also subject to root rot during very wet years and frost heaving. Locating individuals of the Fickeisen plains cactus can be difficult, even when their exact location is known, and therefore, searches are best done during their flowering period.

Reproduction has not been specifically studied on the Fickeisen plains cactus. However, reproduction for plant species in the genus *Pediocactus* occurs by cross-pollination (Pimienta-Barrios and del Castillo 2002, p. 79). Species of small native bees are the primary pollinators. Species of hover flies and bee flies have also been observed visiting flowers of the Fickeisen plains cactus (Milne 1987, p. 21; NNHP 1994, p. 3; Peach *et al.* 1993, pp. 312–314; Tepedino 2000, p. 7; Tepedino 2012, pers. comm.). Hughes (1996a, p. 50) found that flowering and fruiting in the Fickeisen plains cactus occurs once an individual plant grows to 10 mm (0.39 in) in diameter and as an individual increases in size more fruit are produced. Specifically, he documented individuals less than 20.9 mm (0.82 in) in diameter produced 1.37 fruit on average (range of fruit produced

1 to 3) compared to individuals at 50 mm (1.97 in) and larger, which produced 3.60 fruits on average (range of fruit produced 2 to 5). This correlation between larger sized individuals and increased fruit production has also been found in other *Pediocactus* species (Phillips *et al.* 1989, p. 4; Hreha and Meyer 2001, p. 86). This information suggests that larger, older individuals contribute more to the population growth rate by potentially having a greater influence on seed output than smaller, younger plants. Based on long-term monitoring information for the Fickeisen plains cactus, the majority of individuals observed tend to range between 20 mm (0.79 in) and 30 mm (1.18 in) in diameter.

Population monitoring of the Fickeisen plains cactus suggests that this variety has a low reproductive capacity. In examining long-term monitoring information by the BLM, fruit production occurred irregularly over a 22-year period with 35 percent, on average, of the population reproducing. Hughes (2011, pers. comm.) found that 30 to 40 seeds are generally produced from a single fruit, and believed that low seed production hinders substantial increases in plant abundance from occurring, even during favorable weather conditions that would support germination (Hughes 1996a, p. 50). Thus, significant episodes of recruitment within populations on BLM lands reportedly occurred two to three times over a 9-year period from 1986 to 1995 (Hughes 1996a, p. 50). Phillips and Phillips (1995, p. 12) reported similar results for the Peebles Navajo cactus in which they documented moderate increases in population numbers roughly two to three times every 10 years. Episodic recruitment may play a role in increasing the threats to the species because adult mortality may continue at a high rate between periods of recruitment, lowering the reproductive potential of the population when conditions are favorable for seed germination.

The mechanisms of seed dispersal in the Fickeisen plains cactus have not been investigated and are poorly understood. Most site visits to populations of the Fickeisen plains cactus have observed seedlings established very close to the adult plant (Goodwin 2011a, p. 9; NNHP 1994, p. 4). The general shared belief is that most species of *Pediocactus,* including the Fickeisen plains cactus, lack a good mechanism for seed dispersal, which is a contributing factor to its endemism and widely scattered, isolated populations (Benson 1982, p. 750; Milne 1987, p. 4).

Habitat

The Fickeisen plains cactus is a narrow endemic restricted to exposed layers of Kaibab limestone on the Colorado Plateau. Plants are found in shallow, gravelly loam soils formed from alluvium, colluvium, or Aeolian deposits derived from limestone of the Harrisburg member of the Kaibab Formation and Toroweap Formation; Coconino Sandstone; and the Moenkopi Formation (Travis 1987, pp. 2–3; Arizona Geological Survey (AZGS) 2011; Natural Resources Conservation Service (NRCS) 2012). Most populations occur on the margins of canyon rims, on flat terraces or benches, or on the toe of well-drained hills with less than 20 percent slope; at elevations between 1,280 to 1,814 m (4,200 to 5,950 ft) (Arizona Rare Plant Guide Committee 2001, unpaginated; AGFD 2011b, entire; Hazelton 2012a, pers. comm.). Habitat of the Fickeisen plains cactus is within the Plains and Great Basin grasslands and Great Basin desert scrub vegetation communities (Benson 1982, p. 764; NatureServe 2011). Dominant native plant species that are commonly associated with these biotic communities include: *Artemisia tridentata* (sagebrush), *Atriplex canescens* (four-wing saltbush), *Atriplex confertifolia* (shadscale), *Bouteloua eriopoda* (black grama), *Bouteloua gracilis* (blue grama), *Bromus* spp. (brome), *Chrysothamnus* spp. (rabbit-bush), *Ephedra torreyana* (Mormon tea), *Eurotia lanata* (winterfat), *Gutierrezia sarothrae* (broom snakeweed), *Pleuraphis jamesii* (James's galleta), *Oryzopsis hymenoides* (Indian ricegrass), *Sphaeralcea* spp. (globe-mallow), and *Stipa* spp. (needlegrass). Other native cactus species that are commonly found include *Agave utahensis* (century plants) and *Echinocactus polycephalus* spp. (Brown 1994, pp. 115–121; Turner 1994, pp. 145–155; Hughes 1996b, p. 2; Goodwin 2011a, p. 4; NatureServe 2011). The *Escobaria vivipara* var. *rosea* (foxtail cactus) is typically found in close association with the Fickeisen plains cactus (Hughes 1996a, p. 47).

The climate of the Great Basin Desert and on the Colorado Plateau is highly variable. The climate of the region is influenced by events in the tropical Pacific and northern Pacific Ocean (United States Geological Survey (USGS) 2002, p. 2). The amount of precipitation received locally varies by elevation and topography, and is patchy in its distribution. Precipitation is bimodal, occurring in the winter (January to March) and summer (July to September) months. The average annual precipitation ranges from 15.2 to 35.5 cm (6 to 14 in) per year; snowfall accumulation averages 22.9 cm (9 in), primarily from January to February (WRCC 2012, entire). Winter precipitation is thought to be critical for the region to ensure soil moisture recharge and a reliable spring growing season (Travis 1987, p. 3; Comstock and Ehleringer 1992, pp. 196–199).

Biological soil crusts are found on the Colorado Plateau in or near the Fickeisen plains cactus' habitat (United States Forest Service (USFS) 1999, entire; BLM 2007a, p. 3–15). Biological soil crusts are formed by a community of living organisms that can include cyanobacteria, green algae, microfungi, mosses, liverworts, and lichens (Belnap 2006, pp. 361–362). These crusts provide many positive benefits to the larger vegetation community by providing fixed carbon and nitrogen on sparsely vegetated soils, soil stabilization and erosion control, water infiltration, improved plant growth, and seedling germination (Rychert *et al.* 1978, entire; NRCS 1997, pp. 8–10; Floyd *et al.* 2003, p. 1704; Belnap 2006, entire).

Distribution and Range

The Fickeisen plains cactus is found only on the Colorado Plateau in Coconino and Mohave Counties. The range of the Fickeisen plains cactus encompasses the Arizona Strip (i.e., the area north of the Colorado River to the Arizona-Utah border) from Mainstreet Valley in Mohave County to House Rock Valley in Coconino County, along the canyon rims of the Colorado River and Little Colorado River, to the area of Gray Mountain, and along the canyon rims of Cataract Canyon on the Coconino Plateau. The majority of the populations are small; some consisting of a few individuals (Table 3). Populations are widely scattered over a broad range and separated by topography. There seems to be abundant suitable habitat that is unoccupied by the plant for reasons unknown. One estimate of the range of the Fickeisen plains cactus is 12,750 square kilometers (sq km) (4,922 square miles (sq mi)) (NatureServe 2011, p. 2). We do not know what information was used to derive this estimate, and, therefore, it may not accurately reflect the current known range. The range of the Fickeisen plains cactus converges with the range of the endangered *Pediocactus bradyi* (Brady pincushion cactus) in House Rock Valley, and overlaps with the range of the threatened *Pediocactus sileri* (Siler pincushion cactus), and the *Pediocactus*

paradinei (Kaibab plains cactus), which is protected by a conservation agreement on the Arizona Strip (BLM 2011a, Figure 3.8–1).

Very little is known about the historical range of the Fickeisen plains cactus. Benson (1982, p. 765) described the range as northern Arizona from the hills in northeast Mohave County to the vicinity of the Colorado and Little Colorado rivers near the Grand Canyon National Park and southeast Coconino County. He estimated the known range to be about 200 km (125 mi) of land. Based on the current spatial distribution of the Fickeisen plains cactus, the plant's range has expanded roughly 72 km (45 mi) west of the Kaibab Plateau in Mohave County to include occupied areas in Mainstreet Valley, Hurricane Cliffs, and Clayhole Ridge on the Arizona Strip.

The Fickeisen plains cactus population near Cataract Canyon was recently documented in 2006. The population is located below the Colorado River and south of the Grand Canyon National Park on the Cataract Ranch but does not appear to represent a range expansion for the species. Benson had identified two areas as occupied by *Pediocactus peeblesianus* varieties that correspond to the location of this population (Benson 1982, p. 765). One area, located below the Colorado River, was identified as a Fickeisen plains cactus occurrence. The second occupied area was located farther south of there but identified as a Peebles Navajo cactus occurrence. Both of these areas were later inventoried as part of a floristic survey in 2006, and the variety of *Pediocactus peeblesianus* observed was documented as the Fickeisen plains cactus (Goodwin 2006, p. 4; Goodwin 2011a, pp. 5–6).

The Fickeisen plains cactus has also been documented on State land within the Boquillas Ranch, which is located to the west of the Cataract Ranch and is privately owned by the Navajo Nation (Goodwin 2006, p. 5; Chapman 2012, pers. comm.). Besides location coordinates, we do not have information describing the status of the Fickeisen plains cactus there. According to Goodwin (2006, pp. 4–5), two German botanists had discovered plants of *Pediocactus peeblesianus* on the Coconino Plateau in 1979, but the plants were thought to be of the variety *maianus.* Based on their field notes, visits to the area between 1980 and 2006 confirmed the locations of three occupied sites by the *Pediocactus peeblesianus,* later documented as the Fickeisen plains cactus. Two of these sites were on the Cataract Ranch while the third site is on State land leased to the Boquillas Ranch (Chapman 2012, pers. comm.). This area was revisited in 2012, but no documentation describing the site visit is available (Goodman 2012, pers. comm.; Hazelton 2012b, pers. comm.). Anecdotal information suggests that additional Fickeisen plains cacti and an abundant suitable habitat occur on the Boquillas Ranch (Chapman 2012, pers. comm. Goodwin 2012, pers. comm.). If additional Fickeisen plains cacti do exist here, it would increase the known range and distribution of the plant.

Abundance and Trends

About 1,150 Fickeisen plains cacti among 33 populations have ever been documented rangewide from 1962 to 2011 (Table 3) (AGFD 2011b, entire; Goodwin 2011a, p. 19; NNHP 2011a, entire). However, 504 individuals among 6 populations have been recently documented and are a subset of the 1,150 individuals. This difference in the number of individuals does not necessarily represent a decline; survey information for the remaining 27 populations is absent, and therefore their status is unknown. Additionally, the increase in plant numbers in the Cataract Canyon population from 2007 to 2011 is due to better detection between years and not to greater abundance. Based on these six documented populations, the breakout of the land ownership follows: BLM (26 percent), Kaibab National Forest (status unknown), State of Arizona (32 percent), the Navajo Nation (14 percent), and privately-owned lands (29 percent).

TABLE 3—TOTAL DOCUMENTED FICKEISEN PLAINS CACTUS NUMBERS

[1962 to 2011]

Population	Land owner	First visited	First count	Last visited	Last count
Beanhole Well	BLM	1979	3	1979	3
Marble Canyon	BLM	1979	8	1979	8
Gray Mountain (Mays Wash)	BLM	1981	29	1981	29
South Canyon	BLM	1979	41	1987	52
Toquer Tank	BLM	1986	8	1994	7
Navajo	BLM	1986	4	2001	10
Salaratus Draw I and II	BLM	1986	17	2001	0
Temple Trail	BLM	1986	7	2001	7
Ward	BLM	1986	12	2001	10
Sunshine Ridge II	BLM	1986	9	2004	35
Clayhole Ridge	BLM	1987	23	2011	42
Dutchman Draw	BLM	1986	167	2011	12
North Canyon	BLM	1987	16	2011	39
Sunshine Ridge	BLM	1987	12	2011	34
Kaibab National Forest	Forest Service	Unknown		2004	Unknown
Shinumo Wash	NN	1993	9	1993	9
Tiger Wash 2	NN	1993	11	1993	11
Little Colorado River Overlook	NN	1956	Unknown	1997	15
Little Colorado River Gauging Station	NN	1999	1 (survey out of season).	1999	1
29 mile Canyon	NN	2000	2	2000	2
Big Canyon	NN	2002	15	2002	15
West of Hellhole Bend	NN	2002	5	2002	5
Small Ridge	NN	2004	1 (survey out of season).	2004	1
Little Colorado River Gravel pit	NN	1956	Unknown	2005	21
Shinumo Altar	NN	1991	Unknown	2005	7
Tiger Wash 1	NN	1993	30	2005	2
Gray Mountain (South of Cameron)	NN	1962	4	2009	3

TABLE 3—TOTAL DOCUMENTED FICKEISEN PLAINS CACTUS NUMBERS—Continued

[1962 to 2011]

Population	Land owner	First visited	First count	Last visited	Last count
Hellhole Bend	NN	2009	314	2009	314
Salt Trail Canyon	NN	2006	119	2011	70
Blue Spring	NN	2005	30	2005	30
Gray Mountain (Sewage Disposal Pond)	Private	1984		1984	4
Cataract Canyon	Private	2007	54	2011	146
Cataract Canyon	State	2007	98	2011	161
TOTAL					1, 105

Notes: Navajo Nation (NN).

TABLE 4—NUMBERS OF FICKEISEN PLAINS CACTI RECORDED IN BLM MONITORING PLOTS AND CLUSTER PLOTS

[1986 to 2011]

Year	Dutchman	Clayhole	Sunshine Ridge	North Canyon	Navajo	Sunshine Ridge II	Salaratus I and II	Temple Trail	Toquer Tank**	Ward	Total
1986 Plants outside plots*.	167	8	9				17				201
1986	21		6	14	4	2		5	8	10	70
1987	107	23	12	16					7		165
1988	102	35		27					9		173
1989	185	31	8	28					9		261
1990	186	32	33	33					6		290
1991	194	37	43	36					13		323
1992	219	44	44	7					7		321
1993	168	34	32	13	0		13	1		0	261
1994	168	38	35	16			44		7		308
1995	188	30	25	11							254
1997	122	21	7	21							171
1998	49	16	6	26							97
1999	45	17	5	28							95
2000	37	20	Not Observed.	22							79
2001	40	63	3	34	10	23	0	7	0	10	190
2002	30	60	12	24							126
2003	50	56	Not Observed.	24							130
2004	45	59	7	40							151
2005	34	59	33	40							166
2006	36	48	26	32							142
2007	32	38	30	39							139
2008	23	40	23	33							119
2009	33	37	33	31							134
2011	12	42	34	39							127

Notes: * BLM reported counts of Fickeisen plains cacti outside of established monitoring plots for 1986 only. No monitoring occurred in 1996 by the BLM due to dry conditions resulting in plants retracted underground. No monitoring reports were submitted to the Service for the years 2010 and 2012.

Our knowledge of abundance and trend information was assessed from annual monitoring reports by the BLM (1986 to 2011) and Navajo Nation (2006 to 2011). Each agency has monitoring plans that are set up to track specific information in each of their populations. However, there are differences in data collection, and this inconsistency makes it difficult to compare trends across the landscape and ownerships. Therefore, results are presented for each landowner separately. No monitoring program has been established for the Fickeisen plains cactus on the Kaibab National Forest and the Cataract Ranch.

Trend information from the five monitored plots indicates that these populations have experienced significant declines in plant numbers. Plant numbers in the four BLM plots increased by approximately 98 percent from 1987 to 1992, but declined by 59.5 percent from 1993 to 2011 (Table 4). The reported decline is based on the number of tagged Fickeisen plains cactus that are present (emergent and alive) during the monitoring period. If an individual tagged plant is retracted underground during the monitoring period, it is counted as missing or retracted but is not included in the live plant count. If that plant does not emerge after 3 consecutive years, the BLM will mark the plant as dead. The Salt Trail Canyon plot on the Navajo Nation plot shows a 49 percent decline over the last 5 years. This decline is also based on the number of live, emergent plants counted during the monitoring period. Plants that are reportedly dead or missing are tallied separately in each successive year that monitoring occurs.

Bureau of Land Management Lands—The BLM manages habitat for 13 documented Fickeisen plains cactus populations (Table 3) that occupy an estimated 36.9-ha (91.3-ac) area (BLM 2007b, p. 67) on the Arizona Strip. The total known population on the Arizona

Strip has declined from 323 individuals in 1991 to 127 individuals in 2011 (Table 4).

The Fickeisen plains cactus was first documented on the Arizona Strip in 1977 at Sunshine Ridge with the remaining populations discovered up through 1986 (Phillips 1979, entire; AGFD 2011b, entire). The populations are widely separated from one another (roughly 31 km (19 mi) apart) in geographically disjunct locations. In Mohave County, populations have been documented in Mainstreet Valley near Dutchman Draw, in Hurricane Valley near Toquer Tank, in Lower Hurricane Valley near Temple Trail, in Salaratus Draw in the Hurricane Cliffs, on Clayhole Ridge, and on Sunshine Ridge. Populations have also been documented in Coconino County near the canyon rims of Marble Canyon, South Canyon, and North Canyon Wash in House Rock Valley. Searches for the Fickeisen plains cactus after 1987 have not located any additional occurrences despite the abundance of suitable habitat present (Hughes 1996a, p. 47; Hughes 2011, pers. comm.).

In 1986, the BLM established long-term monitoring at the Dutchman Draw, North Canyon wash, Clayhole Ridge, and Sunshine Ridge populations (Hughes 1996a, p. 47). The plots were located in populations that contained the densest number of Fickeisen plains cacti and were easily accessible (Hughes 2009, p. 28; Hughes 2011, pers. comm.). They were visited each year from 1986 to 2009, and in 2011, to record information on abundance, size (diameter), reproduction, recruitment, mortality, and missing or retracted plants. BLM classified plants into five different size classes based on measured width between 1987 and 1995. After 1997, two size classes were used to reflect the juvenile (0 to 15 mm (0.6 in)) and adult (16 to 31 mm and greater (0.63 to 1.22 in)) size classes. The changes to the size classes prevents comparing the data among years; however, it does provide some information regarding the proportion of the population in the small and larger size classes that can be used to describe recruitment. Besides the four plots, BLM established seven cluster plots: Navajo, Ward, Salaratus Draw 1, Salaratus Draw 2, Sunshine Ridge 2, Temple Trail, and Toquer Tank. Cluster plots consist of rebar centered among a small number of scattered individuals. These are visited once every 5 to 10 years for the purpose of recording presence/absence.

Dutchman Draw—The Dutchman Draw plot is the largest plot, situated within tall, dense grass in Mainstreet Valley. It has experienced a 95 percent decline in the last 18 years. Up until 1999, plant numbers in the plot accounted for 64 to 74 percent of the total reported numbers for the Arizona Strip population. Abundance in this plot increased during the late 1980s from 167 individuals to a high of 219 plants in 1992. As of 2011, only 12 plants occur in the plot. The plot experienced its highest number of seedlings from 1989 to 1992, a period when the BLM recorded plants in the smallest size class. Only one other seedling was detected in 1994. Between 1997 and 2005, the two size classes were relatively equal. After 2007, the larger size class showed an upward trend, while a significant drop occurred in the smaller size class. This gap between the two size classes has continued through 2011, in which 83 percent of the plot's individuals are adult plants. There were a total of 111 plants counted as recruitment (plants with a diameter less than 20 mm (0.79 in)) with an average of 7 individuals per year; 94 percent of those were reported from 1994 to 2004. On average, 31 percent of tagged plants fruited in 5 of the 22 years of percent fruiting was recorded. From 2001 to 2011, 174 plants were reported missing or retracted (average 35 plants per year). Mortality totaled 257 plants over a 15-year period from 1987 to 2011 with 144 of those occurring in the year 2000. The BLM stated that the 144 mortalities included tagged plants that that were previously counted as retracted plants but because they had not been seen since the late nineties, they were assumed to be dead (Hughes 2000a, p. 2). In summary, this plot has shown a continued decline since 1992. Although many plants are within reproductive age, there have not been any significant increases in plant numbers. Mortality and the number of plants missing or retracted have been higher than the number of new recruits. With only 12 plants in 2011, we believe this plot could be extirpated in the near future.

Clayhole Ridge—The Clayhole Ridge plot occurs on top of a limestone ridge (BLM 2007b, p. 67). Plant numbers have varied with a high of 63 individuals (2001) and a low of 16 individuals (1998). Since 2001, plant numbers have declined by 33 percent. As of 2011, the plot has 42 plants. No seedlings were reported from 1987 to 1995, when the small size classes were measured. During that period, 76 percent of the individuals were greater than 20.1 mm (0.79 in) in diameter, while 9 percent were less than 10 mm (0.39 in) in diameter. The gap between the small and larger size classes has continued through 2011, with 88 percent of the individuals in the larger size class. Hughes (1996b, p. 17) attributed this division to the lack of intensive surveys for seedlings. This plot had the highest percent of cactus producing fruit and in the most years compared to the other plots. Fruiting production occurred in 16 of the 22 years reported with 6 to 85 percent of tagged cactus fruiting in any given year. New recruits, however, appeared to be low, with a total of 34 new plants (average of 2 per year) reported in 11 of the 16 years. There were a total of 40 mortalities between 1988 and 2005, and 251 plants were reported missing or retracted from 1998 to 2009 (average of 21 plants per year). In summary, abundance has varied in this plot overall. Since 2001, plant numbers have declined by 33 percent. Even with the high number of plants that produced fruit and considering that larger individuals produced multiple fruit, recruitment appears to be poor. Mortalities, in combination with the number of plants missing or retracted, are substantially high in light of overall plant numbers. The years between 2000 and 2001 are the exception, when plant numbers increased from 20 to 63. Reasons attributed for the sharp increase are unknown and do not appear to be correlated to weather, as the spring of 2000 was very dry (Hughes 2000a, p. 1).

Sunshine Ridge—The Sunshine Ridge plot is located along a ridgeline and downslope on a bench next to Toroweap Road (Hughes 1996b, p. 17). This plot has experienced great variations in plant numbers. Monitoring began with six plants in 1986, and as of 2011, the plot contained 34 plants. Plant numbers fluctuated from a high of 44 (1992) to none being observed in 2000, because they were either retracted or dead (Hughes 2000a, p. 1; Hughes 2005a, pers. comm.), possibly in response to below-average precipitation that year. The plot had two distinct periods of relatively high numbers; from 1990 to 1995, with an average of 35 plants, and from 2005 to 2011, with an average of 29 plants. The worst years occurred in between these peaks. The plot was vandalized in 1996, which may have contributed to the significant decline, although plants were not observed to have been damaged by the vandalism (Hughes 2005a, pers. comm.). From 1987 to 1995, 77 percent of individuals were greater than 10.1 mm (0.40 in) in diameter, while only two very small plants were discovered during this period. From 1997 through 2011, the majority of the plants were in the larger size class which currently includes 85 percent of the individuals in this plot.

Fruit production occurred in 10 of the 22 years, with 16 to 79 percent of tagged cacti fruiting. A total of 26 new recruits (average 1.7 per year) occurred in 7 of the 16 years reported. A total of 43 plants died, with 74 percent of those mortalities occurring from 1989 to 1995. There was also a total of 45 plants reported missing or retracted (average of 4 per year), with 82 percent of these reports occurring from 2006 to 2009. In summary, this plot has experienced great fluctuations in numbers but has maintained an average of 21 plants over the years. Reasons for the fluctuations have not been fully investigated. Despite a high percentage of plants fruiting, only two seedlings were documented over a 16-year period. Both mortality and the number of plants missing or retracted exceeds the number of new recruits. The status of the species in the plot appears to be unstable and trending towards decline.

North Canyon—The North Canyon Plot occurs in House Rock Valley on two small hills near North Canyon wash. As of 2011, the plot contained 39 plants. Plant numbers have also varied and have not been investigated. From 1987 to 1991, plant numbers increased by approximately 55 percent, then declined by approximately 81 percent in 1992. The sharp decline was attributed to a high number of plants lost from rodent predation in 1992. Post 1992, plant numbers have gradually increased to a high of 40 in 2004 and 2005, and currently fluctuate between 31 and 39 individuals. Size structure has been dominated by larger individuals since 2000; few to no seedlings have been reported. From 1988 to 1995, 85 percent of plants were greater than 10.1 mm (0.40 in) in diameter. No small-sized plants were found during these years. From 1997 through 2002, the size class distribution was relatively equal. After 2002, a shift occurred, with an increase in the number of individuals in the larger size class and a decrease in the number in the smaller size class. Currently, 90 percent of plants are in the larger size class. Fruit production occurred in 11 of the 22 years reported, with 8 to 64 percent of tagged cactus fruiting. There were 31 new recruits (average of 2 plants per year) in 10 of 16 years reported. There were a total of 37 mortalities, including the 26 deaths in 1992. A total of 72 plants were reported missing or retracted (about 6 plants per year); 65 percent of those occurred from 2002 to 2005, when the plot also increased in numbers. In summary, the plot has maintained between 31 and 39 individuals since 2004. Given the size structure, the plot appears to be dominated by aging adult cactus. Very few small plants were documented between 1986 and 1995. In addition, mortality, combined with the number of plants missing or retracted, exceeds recruitment. This plot is trending towards decline due to poor recruitment and the current size-class distribution.

Information collected on the seven cluster plots was reported in BLM's 2001 annual monitoring report and is limited to count data (Roaque 2012, pers. comm.). The Navajo and Ward clusters plots are located in proximity to the Dutchman Draw population. In 1986, 4 plants were found at Navajo and 12 at Ward. Visits to these sites in 1993 reported zero plants in both plots. These sites were last visited in 2001 and 10 plants each were found in both plots. No information describing the 1993 visit was provided in the monitoring report. Reported numbers for Salaratus Draw 1 and Salaratus Draw 2 were 5 and 12, respectively in 1986 (BLM 1986, p. 2) and, 2 and 11 plants, respectively in 1993. In 1994, the Service visited Salaratus Draw sites and counted 14 plants in Salaratus Draw I and 30 plants in Salaratus Draw II (Brooks 1995, p.1). Both of these sites were last visited in 2001 and zero plants were reported (Roaque 2012, pers. comm.). We do not have locations of these sites, in relation to the other, on file. Because the BLM referred to these sites as simply Salaratus Draw in their 1986 annual monitoring report and we do the same in this document unless specificity between the two sites is called for. The Sunshine Ridge II cluster plot had 9 plants in 1986 and 23 plants in 2001. The Temple Trail cluster plot had 5 plants in 1986, 1 plant in 1993, and 7 plants in 2001.

The Toquer Tank cluster plot was visited regularly from 1986 to 1991. The reported number of plants found during that time ranged from 8 in 1986, up to 13 in 1991, to 7 in 1994 (Table 4) (Roaque 2012, pers. comm.; AGFD 2011b, entire). Information from BLM's annual monitoring reports for the years 1995 through 2000 noted ''no observations'' for the Toquer Tank cluster plot but did not provide an explanation to what this meant. We do not know if this signifies that the cluster plot was not visited or whether a visit did occur but no Fickeisen plains cacti were observed at the time. Subsequently, the BLM no longer included Toquer Tank in their monitoring reports.

Despite the confusion with Toquer Tank and the length of time since the Salaratus Draw cluster plots were last visited, we believe these areas may still be occupied by the species. When Hughes last visited Salaratus Draw I and II in 2001, he noted that both sites were very dry (Roaque 2012, pers. comm.) and plants may have been retracted at the time. Hughes further noted that the cluster plots are located in areas with dense grass in which, the plants are difficult to find if they are not in bloom. We do not have any additional information to describe the conditions at the Toquer Tank cluster plot; however a visit to the area is warranted. We are seeking any information about the status of the Fickeisen plains cactus at these three areas, specifically information to describe abundance, health, and age-class diversity of the plants. We also seek information describing the status of its habitat and any land use activities occurring within occupied areas (see Information Requested).

We also have limited information about the three populations located in House Rock Valley where the Fickeisen plains cactus has been documented, but these areas have not been visited in over 18 years. The populations are located at Beanhole Well, Marble Canyon, and South Canyon in House Rock Valley near the North Rim of the Grand Canyon National Park. The Beanhole Well population is located north of the South Canyon site and just south of Highway 89A near the Vermillion Cliffs. This is a small population that was discovered in 1979, and contained only three plants (Anderson and Gierisch 1979, p.1; AGFD 2011b, entire). Field notes described the plants as healthy, scarce, and with several size classes present. The site had been revisited by Hughes, and while occupied habitat was observed, no plant numbers were reported to us (Calico 2012, pers. comm.). The only available information about the Marble Canyon site was that 8 plants were documented there in 1979 within a 100-by 100-m area (0.06-by 0.06-mi) (Phillips 1979, p. 3). Near the canyon rim of South Canyon, a total of 41 plants among three populations were observed in 1979 within a 1,000-by 200-m (0.62-by 0.12-mi) area. Only three plants were noted having several size classes present; plants appeared healthy but scarce. In 1987, 52 plants were observed during a soil study at the South Canyon site (AGFD 2011b, entire). Travis (1987, p.4) observed animal burrows at the site with the Fickeisen plains cactus found in the disturbed ground. A short-term monitoring plot was established there from 1982 until 1989 (Phillips *et al.* 1982, p. 7). The only available information described poor recruitment

in the plot, which was attributed to below average precipitation (Service 2001a, p. 1). The site was last visited in 1993 by Hughes (Roaque 2012, pers. comm.), who had observed several Fickeisen plains cacti but did not provide specific information on plant numbers. We are seeking any information about the status of the populations at these three areas, specifically information to describe abundance, health, and age-class diversity of Fickeisen plains cactus. We also seek information describing the status of its habitat and any land use activities occurring within occupied areas (see Information Requested).

Navajo Nation Lands— The Navajo Nation lists the Fickeisen plains cactus as a Group 3 species on the Navajo Endangered Species List, which is a ''species or subspecies whose prospects of survival or recruitment are likely to be in jeopardy in the foreseeable future'' (Navajo Nation Division of Natural Resources 2008). There are 15 known populations of the Fickeisen plains cactus on the Navajo Nation (NNHP 2011a, p. 1). Eleven populations contain fewer than 20 plants, while three and possibly five populations contain only two to three individuals (Table 3). Three hundred and fourteen plants occur in a single population discovered in 2009. This site was visited in February 2012 with monitoring planned in the near future. Only 4 of the 15 populations have been visited more than one time by the Navajo Nation Heritage Program staff (NNHP 2011a, p. 1). They reported substantial decreases in plant numbers recorded during their most recent visits to two of these populations; the other two populations appeared stable. We do not have information on the total amount of occupied habitat of the Fickeisen plains cactus on the Navajo Nation.

Surveys for the Fickeisen plains cactus on the Navajo Nation occurred in 1994, when 280 individuals were located (NNHP 1994, p. 3). Re-surveying of known populations between 2004 and 2005 resulted in only half of the 15 populations located and substantially fewer plant numbers than the 280 previously reported (Roth 2005, pers. comm.). In 2006, a monitoring plot was established at one of their largest populations (Salt Trail Canyon) (Roth 2007, p. 3). The plot has been monitored annually except for 2010, to estimate population trends and record reproductive efforts.

In 2006, 119 plants were recorded within the plot. Plant numbers increased to 143 individuals in 2007, but this rise was primarily due to increased survey efforts that year (Roth 2008, p. 6). Since 2007, plant numbers have declined by 49 percent with 70 plants found as of 2011 (NNHP 2011b, p. 2). In 2009, 31 plants were found dead or could not be relocated with 8 new recruits. In 2011, 28 plants were found dead or were not located with one new seedling observed (NNHP 2011b, p. 3). Of the remaining plant in the plot, their observed condition, mean diameter, and reproductive output declined as well. From 2006 to 2008, the majority of plants were rated in excellent condition. The number of plants rated fair or poor increased from 4 in 2008, to 23 in 2009. These patterns may have been influenced by above-average rainfall in 2005 and 2007, but below-average precipitation in 2008 through 2010, on the Navajo Nation (NNHP 2011b, p. 3). The mean diameter of plants between 2008 and 2009 was 28 mm (1.10 in). By 2011, the mean diameter declined by 5 mm (0.20 in) as a result of the cactus shrinking rather than a loss of plants in that size class. The plot has been dominated by the larger size classes with 1 percent of the plants recorded as seedlings. Reproductive structures observed in 2009 and 2011 were flower buds, flowers both at and past their peak, and aborted flower buds, an observation which was similar to phenological results in 2008. In general, reproductive effort in 2009 was moderate, while in 2011 it was extremely low compared to 2008. In 2008, 205 reproductive structures were observed on 98 plants, and this was attributed to above-average rainfall in 2007, whereas 2008 and 2010 had below-average rainfall (NNHP 2011b, p. 3). In summary, short-term results demonstrate a continued decline over the last 5 years. Mortality, combined with the number of plants missing between years, is exceeding the number of smaller, young plants observed. In addition, the reproductive output appears to be low, in that no fruit were observed, and was likely influenced by below-normal precipitation.

Kaibab National Forest Lands—The Kaibab National Forest has recorded two limited occurrences of the Fickeisen plains cactus (USFS 2005, p. 148; AGFD 2011b, entire). These occur near the National Forest boundary of the North Kaibab Ranger District below the eastern and western edges of the Kaibab Plateau. The total number of plants that occur is unknown, but the population is considered to be small with only a few individuals (Phillips 2005, pers. comm.). Additionally, the amount of habitat is considered to be very limited and located in remote areas far removed from management actions. Beyond their discovery, the Kaibab National Forest has not monitored these plants. Occupied areas are managed for multiple uses but the predominant uses are wildlife habitat, livestock grazing, and recreation. Additional suitable habitat is believed to exist in the Lower and Upper Basin areas on the Tusayan Ranger District. Surveys for the Fickeisen plains cactus are needed in order to verify this (USFS 2009, p. 72).

State and Private Lands—A large occurrence of the Fickeisen plains cactus was documented in 2006, near the rim of Cataract Canyon on Cataract and Espee Ranches, which is owned and managed by Babbitt Ranches, LLC. These ranches are located on the Coconino Plateau south of the Grand Canyon National Park. The land within Cataract Ranch includes 18,210 ha (45,000 ac) of private land and 53,823 ha (133,000 ac) of land leased from the State of Arizona (The Nature Conservancy (TNC) 2000, p. 4). On December 7, 2000, TNC acquired 13, 953 ha (34,480 ac) of the privately owned parcels and placed these lands under a conservation easement; TNC refers to the easement land as the Cataract Natural Reserve Land (TNC 2000, p. 22). The easement land forms a large contiguous block in the southern portion of Cataract Ranch, but is interspersed among numerous parcels of State land in the northern portion of the ranch (TNC 2000, p. 3). The Espee Ranch is adjacent to the western boundary of the Cataract Ranch and includes State and private lands. Surveys for the Fickeisen plains cactus on the Espee Ranch were planned for spring of 2012; the status of that survey is unknown.

From 2006 to 2011, Goodwin located 307 Fickeisen plains cacti at 37 sites while conducting a general floristic inventory on the Cataract and Espee Ranches (Goodwin 2006, p. 7; Goodwin 2008, pp. 8–10; Goodwin 2011a, pp. 1–9). The number of plants recorded at each site was detected using a 5–10 minute visual search of the area (Goodwin 2011b, pers. comm.). About 146 Fickeisen plains cacti are located on the Cataract Natural Reserve Land, and 161 plants are on State land (Goodwin 2011a, pp. 18–20). Only two mature plants were located on the Espee Ranch. Goodwin defined sites as physical breaks in the habitat separating one occupied area from another (Goodwin 2011b, pers. comm.). Occupied sites had an average of 8.3 plants (range of 1 to 32 individuals) within a 0.10-ha (0.25-ac) or smaller sized area. About 30 percent (92 of 307 plants) of the plants observed were classified as immature

plants that appear to be of less than breeding age. The distribution of the plants appears to be loosely associated with the Cataract drainage. Most occupied areas occurred no farther than 3.22 to 4.83 km (2 to 3 mi) from the rim of the canyon and covered a 48-km (30-mi) linear area (Goodwin 2011a, p. 7). No formal surveys or permanent monitoring plots have been established.

The Fickeisen plains cactus has been documented on a mix of Federal, tribal, and private land near the vicinity of Gray Mountain. These areas have not been visited for many years, and the status of the plants is unknown. Information from the AGFD Heritage Data Management System noted that a Fickeisen plains cactus found on the Navajo Nation near the town of Gray Mountain was collected as a herbarium specimen in 1962 (AGFD 2011b, entire). This site was believed to have been revisited in 1977, but location information provided from that visit was too vague. The area was last visited in 2009 by the Navajo Nation botanist and three plants were found (NNHP 2011a, p. 2). In 1984, four Fickeisen plains cacti were found in the same vicinity, south of the Navajo Nation but on private land near a sewage disposal pond on the western side of Highway 89. This site has not been revisited since 1984. Across the highway on the eastern side, 29 live and 4 dead Fickeisen plains cacti were found in 1981. The AGFD Heritage Data Management System noted that plants were scattered near Mays Wash where BLM, State, and privately owned lands occur (AGFD 2011b, entire); however the location information suggests most plants are found on BLM lands. In 1983, a monitoring plot was established but there is no information that describes those efforts or results. The area was last visited in 1984, and four plants were observed, three of which were in bloom.

In summary, of the 1,150 Fickeisen plains cacti among 33 populations that have been documented since 1962, we only have recent information pertaining to the status of 504 individuals among 6 populations. We acknowledge that additional Fickeisen plains cacti may be present in the other 27 known populations, but these have not been visited for over 18 years, and the status of the plant is unknown. Of the six populations, five are currently monitored. These five plots are within the largest populations on the Arizona Strip and one of the largest populations on the Navajo Nation. Long-term results from the BLM show a 59.5 percent decline in plant numbers for the four monitored plots combined since 1992. The decline appears to be a result of higher rates of missing or retracted plants and mortality over several consecutive years and low seedling recruitment. Adult plants, which produce more fruit and have a greater reproductive output then immature plants have been removed from the BLM populations and are not being replaced by new recruits. Short-term monitoring results from the Salt Trail Canyon population on the Navajo Nation indicate plant numbers have declined by 49 percent in the last 5 years. This population is also dominated by older adult individuals that appear to have low reproductive output based on aborted reproductive structures observed in 4 of the 5 years monitoring occurred, with high mortality compared to recruitment.

Of these five populations, the observed decline in seedling recruitment and survival is difficult to attribute to a single cause; it is more likely associated with a combination of environmental factors that are acting together. The reproductive capacity for the Fickeisen plains cactus is considered to be naturally low (e.g., low seed production and poor dispersal mechanism), in which, introducing external factors that may place additional stress on the life history characteristics of these populations may further inhibit population growth. Because these five monitoring plots are located in large populations and have demonstrated significant decreases in plant numbers, it is likely that the smaller, isolated populations whose status is unknown are experiencing similar declines. The Fickeisen plains cactus on the Cataract Ranch is the exception. This population is the only location showing relatively good age-class diversity (30 percent of the population is considered to be immature); however, there is no long-term monitoring information for this area to draw conclusions. This area has the largest population of the Fickeisen plains cactus, but only 29 percent of those individuals are protected under the conservation easement.

Based on the best available information on the species, the known numbers of the Fickeisen plains cactus have declined. It is likely that the species will continue to decline, for the reasons described below, as mature plants die and few seedlings are present to replace them. The viability of the five monitored populations has been reduced due to low recruitment and the loss of mature, reproductive plants. If the threats described below continue to affect these populations, the long-term viability of the populations may be compromised. We acknowledge that the observed declines are restricted to monitoring plots that may not accurately reflect rangewide trends. In addition, our inability to say with certainty that plants that have been recorded as missing or retracted are dead may mean that we have underestimated the decline. However, we conclude, based on the information analyzed, that the largest populations have declined, and that recruitment is reduced or nonexistent for the monitored populations.

Summary of Factors Affecting the Fickeisen Plains Cactus

Factor A. The Present or Threatened Destruction, Modification, or Curtailment of Its Habitat or Range

Based on the habitat characteristics described above, potential factors that may affect the habitat or range of the Fickeisen plains cactus are discussed in this section, including: (1) Livestock grazing; (2) nonnative, invasive species; (3) uranium mining; (4) road construction and maintenance; (5) ORV use and recreation; (6) commercial development; and (7) drought and climate change.

Livestock Grazing

The habitat of the Fickeisen plains cactus has been grazed since the late 1800s, and continues to be used for grazing by cattle, domestic sheep, and feral horses. In general, livestock grazing may result in direct loss or damage to the Fickeisen plains cactus and the habitat that supports its persistence as a result of trampling, compacting soil, increasing erosion, losing the soil seed bank, introducing invasive species, and disturbing native pollinators (Klemmedson 1956, p. 137; Ellison 1960, p. 24; Fleischner 1994, entire; Trimble and Mendel 1995, pp. 234–240; Kearns *et al.* 1998, p. 90; DiTomaso 2000, p. 257). For the Fickeisen plains cactus, the risk of trampling is greatest when plants emerge above ground at the same time that cattle occupy the area. Given their small size and lack of hard spines, plants are vulnerable to being stepped on and may be killed or damaged as a result (Phillips and Phillips 1995, p. 6). During the wet winter months when rainfall is sufficient, water may collect in pockets of bedrock on the canyon rims, attracting livestock to these areas. Although most plants retract in winter, those plants whose crown sits above the surface are still vulnerable to trampling and risk damage to their meristem. Plants can also be dislodged by cattle as they wander through an occupied area. Increased grazing pressure can

negatively impact Fickeisen plains cactus habitat. The soil where plants occur is shallow, sandy, and easily compactible, and may be covered by biological soil crusts, which are easily damaged by trampling (NRCS 1997, p. 10; Evans and Johansen 1999, p. 185). Livestock concentrating within occupied areas can lead to soil compaction and erosion that may decrease the ability of the soil to store seed and support seedling establishment, and may prevent plants from seasonally retracting underground (BLM 2007b, p. 74).

Bureau of Land Management Lands—Livestock grazing has occurred on the Arizona Strip and within the habitat of the Fickeisen plains cactus since the mid-1800s (BLM 2007a, p. 3–123). Unregulated use of the rangeland between the late 1880s and early 1900s resulted in overgrazing and rangeland deterioration. The passage of the Taylor Grazing Act (43 U.S.C. 315) in 1934 led to grazing reform and the establishment of allotments, kind and number of livestock, and seasons-of-use. Between the late 1950s and 1980s, the BLM made further adjustments in livestock numbers and the season-of-use, and implemented regulated grazing systems and management plans. Compared to 1900s, the current permitted level of grazing has been substantially reduced. The land and the vegetation community is slowly recovering, with habitat improvements noted by the BLM over the last several decades. Although populations of the Fickeisen plains cactus persisted during past years of overgrazing, we do not have information to describe any historical effects grazing may have had to the plant.

All habitat occupied by the Fickeisen plains cactus on the Arizona Strip occurs within active grazing allotments (BLM 2007b, p. 67). The Dutchman Draw plot is located in the Mainstreet Allotment and within a transitional pasture that is used in May for 2 to 4 weeks; the Clayhole Ridge plot is located within a single pasture of the White Pockets Allotment and has season-long grazing from mid-October to June; the Sunshine Ridge plot is within the Wildband pasture of the Wildband Allotment that is used from mid-June to September; and the North Canyon plot is within Rider Point pasture of the Soap Creek Allotment that has winter-spring use. The Salaratus Draw population is in the Salaratus pasture that is used in the winter season. Plants in the Temple Trail cluster plot are in the Temple Trail Allotment, Beanhole Well plants are in the Beanhole Allotment, and Toquer Tank plants are in the Toquer Tank Allotment (BLM 2008a, Appendix C). The Beanhole, Soap Creek, Temple Trail, and Wildband Allotments are categorized as ''improve allotments.'' These are ''managed to improve resource conditions or conflicts and receive the highest priority for funding and management actions'' (BLM 2007a, p. 3–124). The Mainstreet, Toquer Tank, and White Pockets Allotments are managed as ''maintain allotments.'' These allotments are managed ''to maintain current satisfactory resource conditions and are actively managed to ensure that resource values do not decline'' (BLM 2007a, p. 3–124). The Mainstreet Allotment is managed under a best pasture system, which attempts to match cattle movements with variable precipitation patterns and seasonal forage production rather than strict rotational schedules (Howery *et al.* 2000, entire). Forage utilization levels for key species are authorized at the 50 percent average of the current years' growth (BLM 2007a, 3–125). We do not have trend information describing rangeland conditions for the pastures occupied by the Fickeisen plains cactus. Available information indicates varying levels of grazing use across occupied habitat on the Arizona Strip (Brooks 1995, p.1; Roaque 2011, pers. comm.).

Impacts associated with livestock grazing have documented direct mortality to the Fickeisen plains cactus from trampling. Over a 17-year period, monitoring by the BLM detected 12 Fickeisen plains cacti killed from trampling. Three plants died at Clayhole Ridge following heavy spring rains. Hughes (1988, p. 2) documented cattle had congregated in the area of the Fickeisen plains cactus, and it appeared that considerable bull fighting occurred, resulting in disturbance to the plant and the soil. Seven plants died from trampling at Sunshine Ridge, including a large mature plant and five seedlings in 2001 (Hughes 2004, p. 2), and two plants died from trampling at Dutchman Draw (Hughes 2000a, p. 2). In House Rock Valley, the risk of trampling to the Fickeisen plains cactus may be greatest during the wet winter months when rainfall is sufficient to provide water for cattle on the canyon rims and into occupied habitat (Hughes 2001, pers. comm.). Because not all plants retract completely underground, directly stepping on the plant can damage the meristem and prevent flower production in the future.

There is evidence from other monitored *Pediocactus* species that trampling can impact numerous plants and often results in direct mortality. The BLM conducts similar monitoring for the *Pediocactus bradyi* (Brady pincushion cactus) as they do for the Fickeisen plains cactus. Over a 14-year period, Hughes (2005b, p. 17) reported two plants killed in the monitored plots from trampling. However, in response to the Service's concern for grazing impacts to the Brady pincushion cactus, the BLM established linear transects to determine livestock damage to the Brady pincushion cactus along the rim of Marble Canyon (Service 2001b, entire). The results showed that 15 Brady pincushion cacti were killed from trampling in the 3 years the transects were monitored (Hughes 2005b, p. 17). Hughes commented that the soil was wet and hoof prints were deep in the soil. Clark and Clark (2008, p. 3), monitoring the *Pediocactus winkleri* (Winkler pincushion cactus), found that 58 of 107 (54 percent) plants were stepped on directly by cattle over a 13-year period, with some plants stepped on more than once. Thirty-five of those plants died immediately from being trampled, while of those that survived, 60 percent eventually died within 4 years of their trampling injury. This provides some evidence that damage caused to plants from trampling may not be readily apparent immediately after the event. We anticipate that more Fickeisen plains cacti have died from being stepped on, either immediately or later in time, but are not being detected through the current monitoring methods (Service 2000, p. 2; Service 2007a, p. 8).

In the House Rock Valley, past heavy use of the range, in conjunction with arid conditions and drought, has resulted in degradation of the rangeland (Grand Canyon Trust (GCT) 2011) and slowed grassland regeneration. The North Canyon population was located in the Cram Allotment, which has been conjoined into the Soap Creek Allotment within the Kane Ranch. The BLM had identified the western half of the Cram Allotment as having a severe overgrazing problem historically and up until 1996. The North Canyon population occurred in the area heavily grazed (Hughes 2000b, p. 21). An October 1995 site visit to the Cram Allotment by Service staff reported that the number of cattle had been reduced from 150 head yearlong to 50 head in the winter-spring season due to the poor condition of the allotment (Brooks 1995, p. 1). In 1995, the BLM installed new water sources on the eastern half of the allotment and blocked water tanks from filling up on the western half. This was anticipated to reduce livestock use on the western half and help to alleviate grazing pressure within occupied Fickeisen plains cactus habitat (Hughes 2000b, p. 22). In 2003 to 2004, the

permittee of the Cram Allotment, now Soap Creek Allotment sold all of the livestock and grazing ceased on the Kane Ranch until 2005. During the period from 2003 to 2005, the Fickeisen plains cactus in the North Canyon plot experienced the greatest increase in the number of plants observed in the plot since 1986.

In 2005, the GCT and Conservation Fund purchased the grazing lease and currently maintain a reduced number of cattle on the allotment compared to previous levels (GCT 2011). They conducted a baseline ecological assessment and found nonnative, invasive species, particularly cheatgrass, abundant on the Kane Ranch in House Rock Valley and the range in poor quality likely from past heavy winter grazing. In addition, rangeland recovery has been slow due of the arid climate and drought conditions, such that forage productivity, vegetative cover, and soil stability are low (GCT 2011). The GCT began an experimental reseeding project and is investigating restoration techniques of the desert grassland community. These efforts, if successful, would improve the quality of habitat for the Fickeisen plains cactus.

In summary, the Fickeisen plains cactus populations on BLM lands are within active grazing allotments. The timing of when cattle are present within occupied Fickeisen plains cactus habitat varies among the four populations but corresponds to the periods when the plants are emergent, and also when they flower and produce fruit. Direct mortality from trampling has resulted in the documented loss of 12 plants, but more plants have likely been affected. Over time, losses to mature individuals or damage caused by trampling that prevents future reproduction will result in population declines. The rangeland that supports habitat for the Fickeisen plains cactus experienced past overgrazing. Although current grazing levels are far reduced from historic levels, the rangeland continues to be grazed during periods of drought. Information from the BLM and GCT suggests that the seasonal variation and changes in the timing of precipitation have resulted in slowed recovery of the rangelands from historic overgrazing and heavy, winter grazing over the past few years. These effects have likely diminished the quality of suitable habitat, particular in the Sunshine Ridge and North Canyon wash plots that are being managed to improve resource conditions or conflicts. Both of these plots have shown great fluctuations in plant numbers that may be correlated with habitat deterioration from livestock grazing coupled with climate conditions. In addition, heavy use in occupied Fickeisen plains cactus habitat during times when the plant may already be stressed from drought may be contributing to the plant's poor or nonexistent germination and recruitment. The Fickeisen plains cactus appears to be able to rebound when the grazing pressure has been removed, as demonstrated in the North Canyon plot. However, if the population numbers are too low—such as the Dutchman Draw plot—recovery may be very slow, or may not occur.

Navajo Nation Lands—Livestock grazing on the Navajo Nation has occurred since the 1880s, primary by domestic sheep and cattle. Stocking rates and the impact of grazing on the landscape have varied over the years (NNHP 2011a, p. 2). Overgrazing was documented in the past (Libecap and Johnson 1980, pp. 71–75; Richmond and Baron 1989, entire) and remained problematic through the mid-1990s (HCN 1996, p. 2). We do not have information on the current grazing levels, but similar to the BLM land, drought conditions have compounded rangeland recovery from past heavy use necessitating balancing rangeland capacity, family-owned herd sizes, and local economies (Redsteer *et al.* 2010, pp. 5–6, 11). Navajo Nation also supports an estimated 30,000 feral horses that contribute to and cause overgrazing problems (Navajo Times 2012). Attempts to control the feral horse population continue to be an ongoing issue on the Navajo Nation.

Livestock grazing is managed by the District Grazing Committees, Farm Boards, and Eastern Navajo Land Board members. Oversight and technical assistance is provided by the Grazing Management Office under the Navajo Nation Department of Agriculture. In general, grazing permits are authorized year round on the west side of the Navajo Nation, while the Eastern Navajo authorizes seasonal permits for the mountainous areas (Hazelton 2012c, pers. comm.). Grazing permits are held by individuals for a certain number of animal units. The grazing permits are generally considered permanent and are inherited by the spouse or children within a family. Livestock rotation is at the discretion of the families that own the livestock.

All areas occupied by the Fickeisen plains cactus on the Navajo Nation are potentially subjected to impacts associated with this grazing (NNHP 2011a, p. 1). However, monitoring has not been conducted in such a way to assess the overall impacts of grazing to the Fickeisen plains cactus and its habitat. Notes from the Navajo Nation Heritage Program pertaining to the 15 known Fickeisen plains cactus populations indicate some livestock impacts have been observed within the 3 largest populations (Hellhole Bend, Salt Trail Canyon, and Blue Spring) (NNHP 2011a, p. 4). A 2012 site visit to the Hellhole Bend population observed habitat disturbance by feral horses and sheep, but no impacts to plants were observed (Robertson 2012, p. 1). Some of the native vegetation within occupied habitat appeared to have been heavily grazed, likely attributable to animals seeking forage following a dry winter.

Livestock damage by sheep was observed at the Salt Trail Canyon population in 2005 (Roth 2007, p. 2) and again in 2008, with nine livestock-related mortalities. Roth (2008, p. 2) documented six dead plants located within a depression in the ground that was believed to have been dug by sheep that bedded down on top of the plants. Monitoring of the plot in 2011 found some evidence that the plot had been disturbed by animals (i.e., one plant appeared to have been partly eaten) and may have contributed to the high mortality that year (NNHP 2011b, p. 4). An October 2011 site visit by the Service observed the habitat had been disturbed by feral horses and sheep concentrating in the area. We do not know at this time how frequent or how long this site may be used by livestock. The only other available information documented hoof prints of cattle and sheep near a cluster of the Fickeisen plains cactus at Shinumo Altar in 1991; one cactus had been partially uprooted and was lying in a hoof print (NNHP 1994, p. 5).

Kaibab National Forest Lands—On the North Kaibab Ranger District, the Fickeisen plains cactus occurs in the Slide Pasture of the Central Winter Allotment that is also part of the Kane Ranch. The Slide Pasture has not been grazed since 2002 (Phillips 2012, p. 1). In addition, the Central Winter Allotment was closed to grazing from 1996 to 2001 due to the 21,448-ha (53,000-ac) Bridger-Knoll wildfire. The habitat type within 3.2 km (2 mi) of the Fickeisen plains cactus population is not suitable for livestock; there are occasional sagebrush, but no understory grasses. A 2011 Kane Ranch Environmental Assessment is currently in process that would address the impacts of livestock grazing to the Fickeisen plains cactus. Populations on the eastern side of the forest boundary are within the Grand Canyon National Game Preserve, which has no livestock grazing.

State and Private Lands—The Cataract Ranch has been utilized for

livestock grazing for well over 100 years. Livestock grazing, by cattle and horses, occurs within occupied Fickeisen plains cactus habitat but is managed differently than grazing on the BLM and Navajo Nation and is not comparable. While the cattle operations are vital to the Cataract Ranch, livestock grazing is managed in a manner that is consistent with the philosophies, values, and conservation ethic of the Babbitt Ranches. For example, cattle operations are one component of the Cataract Ranch, but the Ranch and the other Babbitt Ranches are managed in a holistic manner that incorporates ecology (wildlife habitat, vegetation diversity, watershed health, historical preservation, cultural values, and recreation), the local and regional economies, and the local and regional human community (Babbitt Ranches 2012, entire). Therefore, herd sizes are not adjusted in response to seasonal availability of water and forage due to drought but are managed together with rangeland health, watershed, and wildlife habitat. More specific to the Fickeisen plains cactus, Goodwin (2011a, p. 8) noted no habitat impacts from grazing in this population while conducting searches for the plant from 2006–2011. Additionally, a land assessment by TNC determined that much of Cataract Ranch remains in an undisturbed, natural state (TNC 2000, p. 1), and the general ecological conditions of the land are excellent (TNC 2011, p. 9). While the Fickeisen plains cactus remains vulnerable to being stepped on by cattle or horses, we anticipate that livestock grazing would not rise to a population-level threat based on habitat conditions. We, therefore, do not anticipate livestock grazing on the Cataract Ranch to be a threat to the Fickeisen plains cactus and its habitat.

In summary, all habitat for the Fickeisen plains cactus occurs in areas that have been grazed and will continue to be grazed in the future. Heavy grazing has been documented on approximately 40 percent of its range, including the Arizona Strip and Navajo Nations lands, with the latter being largely unregulated grazing management. Although current grazing pressures across the range of the Fickeisen plains cactus are far below the levels of the late 1800s, the continued presence of Fickeisen plains cactus does not suggest grazing has no effect on the plant. Based on available information, the rangelands are still recovering from past heavy grazing across the range of the Fickeisen plains cactus. Continued grazing on the BLM and Navajo Nation during the prolonged drought in the late 1990s and local droughts in the 2000s has added to rangeland deterioration and changes to the vegetation community, while the drier climate is compounding recovery of the grasslands that support habitat for the Fickeisen plains cactus.

Long-term monitoring has documented direct mortality to the Fickeisen plains cactus from livestock. More plants on the BLM lands have likely been killed or damaged from trampling, especially given evidence of trampling on other *Pediocactus* species, but for which the effects are not captured during the monitoring period. Trampling has removed adult individuals from the population. While this occurs infrequently and affects a few plants, it contributes to population declines and may exacerbate the effects of small population size (see *Factor E. Other Natural or Manmade Factors Affecting Its Continued Existence* section). Thus, livestock grazing, in and of itself, may not rise to a population-level threat for the Fickeisen plains cactus, but when combined with additional stressors such as nonnative species, drought, and climate change, rodent and rabbit predation (discussed below), the combined effect will likely produce population-level impacts to the Fickeisen plains cactus. Therefore, we believe that livestock grazing, in conjunction with other factors, is a threat to the Fickeisen plains cactus and its habitat.

Nonnative, Invasive Plant Species

A potential threat to the Fickeisen plains cactus and its habitat is nonnative, invasive species. The spread of nonnative, invasive species is considered the second largest threat to imperiled plants in the United States (Wilcove *et al.* 1998, p. 608). Invasive plants—specifically exotic annuals—negatively affect native vegetation, including rare plants. One of the most substantial effects is the change in vegetation fuel properties that, in turn, alter fire frequency, intensity, extent, type, and seasonality (Menakis *et al.* 2003, pp. 282–283; Brooks *et al.* 2004, p. 677; McKenzie *et al.* 2004, p. 898). Shortened fire return intervals make it difficult for native plants to reestablish or compete with invasive plants (D'Antonio and Vitousek 1992, p. 73).

Invasive plants can exclude native plants and alter pollinator behaviors (D'Antonio and Vitousek 1992, pp. 74–75; DiTomaso 2000, p. 257; Traveset and Richardson 2006, pp. 211–213; Cane 2011, pp. 27–28). For example, cheatgrass and red brome outcompete native species for soil nutrients and water (Aguirre and Johnson 1991, pp. 352–353; Brooks 2000, p. 92), as well as modify the activity of pollinators through producing different nectar from native species (Levine *et al.* 2003, p. 776) or introducing nonnative pollinators (Traveset and Richardson 2006, pp. 208–209). Introduction of nonnative pollinators or production of different nectar can lead to disruption of normal pollinator interactions for the Fickeisen plains cactus.

Within the range of the Fickeisen plains cactus habitat, the BLM identified 15 nonnative, invasive species: 9 that are designated as noxious weeds in Arizona and 6 nonnative species that are not listed as noxious weeds on the Arizona Strip (BLM 2007a, pp. 3–34). The Cataract Ranch identified 26 nonnative, invasive species on their land. Some of these species are the same species that are also found on the BLM (Goodwin 2011a, p. 11). Those nonnative, invasive species that are common to both landowners include *Acroptilon repens* (Russian knapweed), *Alhagi maurorum* (camelthorn), *Bromus tectorum* (cheatgrass), *B. rubens* (red brome), *Halogeton glomeratus* (halogeton), *Salsola tragus* (Russian thistle), and *Taeniatherum caput-medusae* (medusahead). In addition, Roth (2007, p. 2) documented *Erodium cicutarium* (redstem filaree) within Fickeisen plains cactus habitat on the Navajo Nation.

On the Arizona Strip, we have some information on the distribution of nonnative, invasive species relative to the Fickeisen plains cactus. Generally, the majority of nonnatives occur near areas between Mainstreet Valley and just east of Hurricane Cliffs (BLM 2007a, Figure 3–12), where Fickeisen plains cactus populations are scattered. During a site visit in 2011, Russian thistle was identified in the Dutchman Draw plot, but any negative effects the species may have on the plant have not been documented by the BLM. Cheatgrass, at varying levels of abundance, is found on the Kane Ranch in House Rock Valley. Based on preliminary modeling results that predict the probability of cheatgrass occurrence, the probability of cheatgrass occurrence appears to be low within in the vicinity of the Fickeisen plains cactus at North Canyon wash, although cheatgrass is present within proximity to the canyon rims.

On the Kaibab National Forest, cheatgrass is the only nonnative, invasive species known to exist in the Fickeisen plains cactus habitat (USFS 2005, p. 139). According to the Forest, cheatgrass occurs in very low densities and is not expected to increase due to lack of available substrate and minimal habitat disturbance. However, the GCT, through their modeling, identified a

high probability of cheatgrass occurrence just south of occupied Fickeisen plains cactus habitat (GCT 2011). If this patch is ignited by a lightning strike, there is the potential for cheatgrass to carry a fire into the area where the Fickeisen plains cactus occurs. Another concern would be if a high density patch of cheatgrass were ignited but the fire stops short of Fickeisen plains cactus habitat, the areas burned could facilitate the spread of cheatgrass towards occupied Fickeisen plains cactus habitat, where the cactus could potentially decrease in density and cheatgrass become a prolific competitor.

On the Navajo Nation, the presence of invasive, annual grasses may have contributed to the decline of the Fickeisen plains cactus within the Salt Trail Canyon (Roth 2007, p. 2). During high rainfall years, high densities of red brome and redstem filaree have dominated the habitat in the Salt Trail Canyon monitoring site (Roth 2008, p. 4). Roth (2005, p. 1) observed an overall decline in the Fickeisen plains cactus population at that time, finding more numbers of the Fickeisen plains cacti in areas where fewer exotic grasses occurred. Red brome is known to deplete soil water faster and at greater depths than native annual species (Brooks 2009, p. 118), and can germinate before native annuals in years with low precipitation and earlier in the season (Salo 2004, p. 293). Higher densities of red brome may also reduce the germination of native plant species (Brooks and Esque 2000, p. 40). Red brome is an early flowering, winter annual species that utilizes winter precipitation (Rice *et al.* 1992, pp. 32, 38; Salo 2004, p. 291). Fickeisen plains cactus is also a species that germinates early in the spring, and, although no studies have investigated the relationship of nonnative, invasive annuals on the seed germination of the plant (Roth 2008, p. 4), the occurrence of red brome and redstem filaree are likely to result in competition for resources the Fickeisen plains cactus depends on.

Cheatgrass and red brome can increase in abundance after a wildfire and increase the chance for more frequent fires (D'Antonio and Vitousek 1992, pp. 74–75; Brooks 2000, p. 92; Brooks and Pyke 2001, p. 5). In addition, cheatgrass invades areas in response to surface disturbances (Hobbs and Huenneke 1992, pp. 324–325, 329, 330). Cheatgrass and red brome are likely to increase due to climate change (see ''Drought and Climate Change'' discussion, below) because nonnative, invasive annuals increase biomass and seed production at elevated levels of carbon dioxide (Smith *et al.* 2000, pp. 80–81; Ziska *et al.* 2005, p. 1328).

The Fickeisen plains cactus has likely evolved adaptions to low intensity, frequent grass fires but may not survive high intensity fires even at low fire return intervals. Some of the Fickeisen plains cacti populations occur on ledges and in areas with sparse vegetation away from annual grasses and would likely not be impacted. However, there are some populations, such as Dutchman Draw, Sunshine Ridge, and the Salt Trail Canyon, where invasive, annual grasses could facilitate the spread of fire into occupied habitat and impact the population. It is difficult to know for certain if cheatgrass could affect the Fickeisen plains cactus or its habitat on the Kaibab National Forest. With the probability of high densities of the species surrounding the plant, the potential for negative impacts does exist. In other species of *Pediocactus,* monitoring of the *Pediocactus paradinei* (Kaibab plains cactus) exposed to different fire intensities indicated high intensity fires resulted in plant mortality (Warren *et al.* 1992, abstract). There is also evidence suggesting that invasion and dominance of cheatgrass following a past fire may have contributed to the decline or loss of some Kaibab plains cactus in the House Rock Valley (USFS 2007, p. 47), suggesting that fire could impact the Fickeisen plains cactus in a similar manner. At this time, however, we do not have sufficient information to evaluate whether the presence of nonnative, invasive species would facilitate the spread of wildfires into Fickeisen plains cactus habitat.

In summary, nonnative, invasive species such as cheatgrass, red brome, and redstem filaree grow rapidly and are prolific seed producers in wet years. Although we lack site-specific information on where nonnative, invasive species occur, we do know they occur in varying densities within or near the Fickeisen plains cactus. Invasion of these species may contribute to the low recruitment of the Fickeisen plains cactus by inhibiting seedling germination due to competition and increasing the plant's risk of exposure to high intensity fires. Densities of the nonnative, invasive species may increase due to climate change (see ''Drought and Climate Change'' section, below) because invasive annuals increase biomass and seed production at elevated levels of carbon dioxide (Brooks and Pyke 2001, p. 42; Bradley 2009, p. 203). Based on available information, we anticipate that densities of nonnative, invasive species will increase in the future. Therefore, we consider nonnative, invasive species to be a threat to the Fickeisen plains cactus.

Uranium Mining

High-quality uranium ore deposits are found on the Arizona Strip and on the Coconino Plateau. Interest in the region's uranium deposits increased in 2008, as the price for uranium ore rose, and applications for new mining claims were sought on public lands surrounding the Grand Canyon. In response, the Secretary of the Interior signed Public Land Order Number 7787 (PLO 7787) effectively withdrawing 407,335 ha (1,006,545 ac) of Federal mineral estates within three parcels from any individual or company making a new mining claim under the Mining Law of 1872 (30 U.S.C. 22 *et seq.*) for a 20-year period (BLM 2012a, pp. 1–4). Existing locatable mineral operations in the withdrawal area will continue to be managed under the current Federal land agency regulations.

However, notices of intent or plans of operations submitted after the effective date of the withdrawal for mineral exploration or development on BLM and the National Forest System lands on claims pre-dating the withdrawal would not be able to proceed unless the mining claim was determined to be valid under the Mining Law of 1872 as of the date of the segregation from new mining claims (July 21, 2009). Sampling may still occur on claims pre-dating the withdrawal to support the mineral examination. In the event the claims are determined to be valid, mining activities could occur at some point in the future (BLM 2011a, 2–14).

There are three Fickeisen plains cactus populations in two parcels of the withdrawal area boundary. The Sunshine Ridge population is in the North parcel; the North Canyon wash and the Kaibab National Forest populations are in the East parcel (BLM 2011a, Figure 3–8.1). The mineral withdrawal essentially removed the potential for negative effects on the Fickeisen plains cactus and its habitat that would be associated with the location and development of new mining claims for the longevity of PLO 7787. Although, if the development of existing valid mining claims in the East parcel were to proceed, we anticipate that the potential for adverse effects from the mine on the North Canyon wash population would be low. This is primarily due to plants growing on ledges and along the rim of the wash, where mineral activity would not likely occur. We also anticipate this low impact scenario to be likely for the

Kaibab National Forest population due to its proximate location near canyon rims.

On the North Parcel, there are six mines surrounding the Sunshine Ridge population (BLM 2011a, Figure 2.4–2). Two mines (Hack Canyon and Hermit mines) are located in close proximity to the Sunshine Ridge population but are currently in reclamation status and no impacts to the population are anticipated. Three mines (Arizona 1, Kanab North, and Pinenut) have an approved plan of operation and pre-date the withdrawal. All three are located well outside of occupied Fickeisen plains cactus habitat. The Arizona 1 mine has been operating since late 2009 (BLM 2012b, p. 6), and no impacts to the plants have been documented by the BLM. The Pinenut mine is scheduled to begin operations in 2012 (McKernan 2012, pers. comm.), but due to its distance from the Sunshine Ridge population, no impacts are anticipated. The Kanab North mine is operating under interim management (e.g., standby status) and will begin reclamation activities in the summer of 2012. The sixth mine, EZ Mine, is located to the west of the population and proposed for development. The potential direct and indirect effects to the Fickeisen plains cactus would be the loss, removal, or injury of plants and loss of habitat from the development of the mine but also habitat degradation or fragmentation from road construction, material transport, and new power lines (Payne *et al.* 2010, pp. 8–9; BLM 2011a, p. 2–15). The BLM, however, will complete a project-specific environmental analysis in the near future that addresses site-specific analysis, findings, and decisions regarding the EZ Mine, and what plan of operations will be made (BLM 2011a, pp. 2–29–2–30). We anticipate the opportunity to work with BLM and address any potential negative impacts from this mine on the Fickeisen plains cactus at that time. In addition, the North Parcel has seven breccia pipes that are confirmed to have uranium resources, and those uranium resources have been estimated (BLM 2011a, pp. 3–35–3–36; BLM 2012b, p. 7). Any mining claim containing these seven breccia pipes would be able to demonstrate valid existing rights and would be mined. If one of the claims were to be developed into a mine, the BLM would take measures to minimize impacts to the Fickeisen plains cactus, such as conducting preconstruction surveys to flag avoidance areas and minimize impacts to the species (BLM 2007b, pp. 74–76).

Lands on the Arizona Strip that are outside of the withdrawal area boundary are open to uranium mineral development (BLM 2008a, pp. 1–20). Because the Fickeisen plains cactus occurs in small, isolated areas on particular soil types, small disturbances to the vegetation and soils may reduce suitable habitat; increase the erosion potential; enable invasion of nonnative, invasive plants; and increase the risk of mortality from clearing, crushing, or trampling associated with developing mining sites (Service 2007a, p. 90; BLM 2011a, p. 4–154). The BLM anticipates a very low likelihood that any such project would be proposed within the habitat of the Fickeisen plains cactus. If such a project is proposed, the BLM would take measures to minimize impacts to the Fickeisen plains cactus as described above (BLM 2007b, pp. 74–76).

On the Coconino Plateau, just south of the Grand Canyon National Park, there is a continued interest in uranium mining on State land. The company VANE Minerals holds mineral rights (or mineral interest to mine uranium) on a large number of properties that are spread over an area of approximately 16,187 sq km (6,250 sq mi) (VANE Minerals 2012) and that include occupied Fickeisen plains cactus habitat on State land within the Cataract Ranch. The company has completed surface drilling for their Wate Uranium Breccia Pipe—located 9 miles south of the Grand Canyon National Park and near the Hualapai Indian Reservation. The company is pursuing a mineral lease from the Arizona State Land Department for ''uranium exploitation'' of the Wate deposit and for preliminary efforts regarding development of the mine. No Fickeisen plains cactus has been documented in this general area, and therefore the plant would not be affected by development of a mine. Exploration drilling has been conducted for twelve additional uranium mineralized breccia pipes that are located within 32 km (20 mi) of the Wate deposit (SRK Consulting 2011, p. 14–1). No mineral resources for these have been established as of 2011, but if a uranium resource is confirmed, a potential exists for a mine to be developed. If that occurs and depending on location information, there is a potential for construction and operations to impact the Fickeisen plains cactus on State land within Cataract Ranch. Direct and indirect impacts would be the same as those identified for the Sunshine Ridge population. However, any development, including mining and associated roads from State land that would need to cross onto land in the Cataract Natural Reserve Land, would be prohibited. Additionally, the location of some Fickeisen plains cacti growing near the rim of Cataract Canyon may be protected from development activities, but those located 4.8 km (3 mi) from the rim could potentially be impacted. Loss of individual plants would lead to declines in the Cataract Ranch population, which is currently the largest known population, and hinder the ability of the Fickeisen plains cactus to increase its distribution in this area. It would also contribute to the further decline of the rangewide population.

In summary, PLO 7787 effectively withdrew over 407,335 ha (1,006,545 ac) of federal mineral estates for a 20-year period; this action removes the immediate threat of habitat loss or degradation associated with development of new uranium mines to the Fickeisen plains cactus populations in House Rock Valley, in the Kaibab National Forest, and on Sunshine Ridge. We acknowledge the possibilities that valid existing mining claims in the withdrawal area boundary could result in the development of a uranium mine in the future. If that happens, we are less concerned with the three populations being adversely affected because of the specific location of the plants near canyon rims. For land on the Arizona Strip that is outside of the withdrawal boundary area, we anticipate a low probability that Fickeisen plains cactus populations would be impacted by future uranium development. If a mine were to be developed near occupied habitat, the BLM would implement avoidance measures to reduce or minimize impacts to the Fickeisen plains cactus, which we anticipate would be incorporated into their analyses for the development of the EZ Mine. On State land, the potential for uranium mining could result in direct mortality and loss of habitat within the Cataract Ranch population. However, most plants are located in close proximity to the rim of Cataract Canyon and would not likely be affected by mining construction or operations. Additional protection to the plant is provided through the terms of the conservation easement, which prohibits new development, including mining, on those parcels, thus preventing new roads or right-of-ways from State lands crossing onto private lands. Therefore, based on available information, we do not anticipate that development of a uranium mine would rise to the level of significance and meaningfully impact the Fickeisen

plains cactus and its habitat. Thus, we conclude that uranium mining is not a threat to the Fickeisen plains cactus or its habitat.

Road Construction and Road Maintenance

Roads can destroy or modify habitat and increase human access that may lead to trampling (discussed below). Additionally, road construction can lead to increased erosion, and vehicle traffic on unimproved roads can result in increased atmospheric dust and dust deposition on vegetation. Road maintenance on U.S. Highway 64 near the Navajo Nation resulted in three Fickeisen plains cacti being salvaged from the existing right-of-way and a fourth cactus protected by fencing (Arizona Department of Transportation 1992, p. 1). Road maintenance also contributed to an unknown amount of habitat loss or disturbance, which was likely small in size.

We analyzed road maintenance and considered it a potential threat to the Fickeisen plains cactus in the November 9, 2009, Candidate Notice of Review (74 FR 57804). On the Arizona Strip, the Fickeisen plains cactus occurs next to roads that receive routine maintenance. The cactus grows close to and, in some cases, in the middle of existing unpaved but well-maintained roads, making it highly vulnerable to becoming crushed or injured by motorized vehicles. Road maintenance activities had resulted in the mortality of a few individuals of the Fickeisen plains cactus on BLM land. These appear to have been isolated occurrences that happen infrequently and impacted a small number of individual plants. Future road construction associated with both uranium and urban development may impact plants that occur on non-BLM lands. However, future road construction is anticipated to be localized in time and space, and would not rise to the level of becoming a significant threat to the Fickeisen plains cactus. Therefore, we do not consider road construction and road maintenance to be a threat to the Fickeisen plains cactus.

Off-Road Vehicle Use and Recreation

Off-road vehicles are a means of transportation and a form of recreation in the range of the Fickeisen plains cactus. On the Arizona Strip, the BLM limits motorized and mechanized vehicle use within Fickeisen plains cactus habitat to existing routes and trails. However, motorized vehicles may pull off a designated route up to 30.5 m (100 ft) on either side of the centerline to camp. There is the potential for vehicles to injure or kill a Fickeisen plains cactus and impact its habitat by pulling off the roadway to park or turn around (BLM 2007b, p. 75). Plants growing along the Navajo Trail near Mainstreet Valley have been affected by drivers pulling off designated routes in the past (Hughes 2005, pers. comm.). Disturbance from ORV use associated with unauthorized camping was documented in House Rock Valley, where a driver drove off-road towards the canyon rim near the South Canyon population (Service 2007b, p. 1). These are the two documented reports that we have of the Fickeisen plains cactus being impacted by ORV use on BLM lands since 2005. In reviewing the BLM's monitoring reports, there were no documented mortalities associated with ORV use to the Fickeisen plains cactus over the 23 years the plant was monitored.

Most of the Fickeisen plains cactus habitat on the Navajo Nation is accessible by dirt two-track roads. Although traffic in these areas is light, and there is an extensive network of existing dirt roads, new roads are continually being created, presumably by locals herding livestock (NNHP 2011a, p.1). No plants have reportedly been impacted, but there is potential for habitat degradation as a result. In addition, 9 of the known 15 populations are located along the scenic canyon rims of Marble Canyon and the Little Colorado River gorge, where tourist traffic is concentrated. Car tires and foot traffic have been documented as damaging the Fickeisen plains cactus at some of these sites (NNHP 1994, p. 5; NNHP 2011a, p. 1). These impacts are likely to increase in the future as there are future plans to develop tourist activities on Navajo land near Marble Canyon and the Little Colorado River gorge (NNHP 2011a, p. 1).

On the Cataract Ranch, increased recreation, primarily associated with hunting, has been observed since 2006. Hunting relies on the use of ORV to retrieve wildlife and access camp sites. However, no impacts to the Fickeisen plains cactus related to recreational activities or ORV use have been observed while conducting searches for the plant on the Cataract Ranch (Goodwin 2011a, p. 8).

In summary, the habitat of the Fickeisen plains cactus is mostly open with flat topography. With most plants growing along scenic canyon rims, there is an increased risk of plants being destroyed or damaged by vehicles driving off-road for recreational purposes. We identified ORV use as a potential threat to the Fickeisen plains cactus in our annual assessment for candidate species (most recently at 75 FR 69222, November 10, 2012). At this time, however, we cannot quantify the extent of ORV-use impacts on the taxon or its habitat, but they continue at some unknown level. Most documented occurrences happened in the past and were isolated occurrences. ORV use may become a threat to the Fickeisen plains cactus in the future but at this time, we do not consider it to be a threat to the plant or its habitat.

Commercial Development

The Navajo Nation is currently interested in developing its land along the canyon rims of Marble Canyon and the Little Colorado River gorge to increase tourism and create more jobs that would boost their local economy (NNHP 2011a, p. 1; Navajo-Hopi Observer 2012). The Navajo Nation President recently signed a nonbinding agreement with a local Arizona developer that lists a resort hotel and spa, restaurant, half-mile river walk, and recreational vehicle park among the attractions that would enable tourists to easily descend into the Grand Canyon. While we do not have specific information about these plans, development along the rim of the Little Colorado River has the potential to impact the Salt Trail Canyon population located nearby. Trampling of plants by people and loss of plants and habitat to make way for development are both of concern. Available information suggests that plans for the proposed development have not begun (NNHP 2011a, p. 1) and may still be in the early design phase.

The Salt Trail Canyon is a known recreational site located to the north of the Fickeisen plains cactus population. Aside from use by hikers, the area is used by Federal and State agencies as a point of entry to conduct native fish surveys in the Little Colorado River. Overall use of the area appears to be minimal, and no recreational impacts to the Fickeisen plains cactus have been observed.

A popular tourist destination that has existed for many years occurs within the Fickeisen plains cactus population that is adjacent to a Little Colorado River overlook. This population was last visited in 1997, and contained 15 plants distributed among two ridges (NNHP 2011a, p. 4). Abundant foot traffic within occupied habitat was identified as a threat to the population by the Navajo Nation Heritage Program. Although the tourism at this site will continue in the future, most foot traffic is confined to paved sidewalks leading towards the canyon rim and outside of occupied habitat. An additional population occurs east of the overlook

area that is also well known among plant enthusiasts and, as a consequence, frequently visited (NNHP 1994, p. 5). This population was last visited in 1999, and one individual was located (Table 3). The timing of the visit was outside of the flowering season, making it difficult to locate plants (NNHP 2011a, p. 4). Both of these areas are easily accessible from the highway and receive a large number of visitors. Trampling of plants and habitat disturbance associated with tourism may increase in the future simply due to the popularity of this site and the accessibility of plants next to the highway. Although habitat disturbances to the Fickeisen plains cactus have occurred here in the past and may be occurring presently, we have no information to be able to quantify this threat.

There is also a potential for human development to expand into or next to the Fickeisen plains cactus habitat on the Navajo Nation. A land dispute between the Navajo and Hopi Tribes resulted in the implementation of a construction ban in 1966 that limited development (Maxx 2012, p. 2). That ban was lifted in 2009, but no development has occurred due to the poor economy. The land has remained mostly undeveloped, but the ability to construct new homes or make improvements provides Tribal members access to areas previously restricted. If this occurs, we do not anticipate the Fickeisen plains cactus to be significantly impacted because new home locations would not be near the canyon rim where the plant occurs. Additionally, the Fickeisen plains cactus is listed as a Group 3 species on the Navajo Endangered Species List, which is a ''species or subspecies whose prospects of survival or recruitment are likely to be in jeopardy in the foreseeable future'' (Navajo Nation Division of Natural Resources 2008, entire). Its listed status on tribal land, in addition to the location of the Salt Trail Canyon population within an area designated as a Preserve, would likely reduce or minimize impacts to the population (see *Factor D. The Inadequacy of Existing Regulatory Mechanisms,* below).

In summary, commercial development associated with tourism activities has impacted the Fickeisen plains cactus' habitat. Impacts to occupied habitat near the Little Colorado River overlook were documented in the past and are ongoing. This population is small and would benefit from a current site visit. Plans for future commercial development near Marble Canyon and the Little Colorado River gorge may substantially impact the Salt Trail Canyon population through potential habitat loss or disturbance. The Salt Trail Canyon population is one of the larger populations on the Navajo Nation and rangewide. Losses to this population would result in further declines to the rangewide population. However, the protected status of the Fickeisen plains cactus and its occurrence within a designated Preserve would to minimize or reduce potential impacts from future commercial development. In addition, we do not have any information to indicate whether plans to develop commercial properties will occur in the future. Therefore, the threat of commercial development is not impending, and we do not consider this a threat at this time or within the near future.

Drought and Climate Change

For background information, please refer to the first paragraph of the ''Drought and Climate Change'' discussion under *Factor A. The Present or Threatened Destruction, Modification, or Curtailment of its Habitat or Range* in the *Summary of Factors Affecting the Acuña Cactus.* As previously discussed, the Fickeisen plains cactus is an endemic species with localized, small populations. In addition, these populations are restricted to very specific soil types. Global climate change exacerbates the risk of extinction for species that are already vulnerable due to low population numbers and restricted habitat requirements. Predicted changes in climatic conditions include increases in temperature, decreases in rainfall, and increases in atmospheric carbon dioxide in the American Southwest (Easterling *et al.* 2000, pp. 2072–2073; IPCC 2007, p. 48; Archer and Predick 2008, pp. 23–24; Karl *et al.* 2009, p. 129). Although we have no information on how the Fickeisen plains cactus will respond to effects related to climate change, persistent or prolonged drought conditions are likely to reduce the frequency and duration of flowering and germination events; lower the recruitment of individual plants; compromise the viability of populations; and impact pollinator availability, as pollinators have been documented to become locally extinct during periods of drought (Memmott *et al.* 2007, pp. 713–715). The smallest change in environmental factors, especially precipitation, plays a decisive role in plant survival in arid regions (Jordan and Nobel 1981, pp. 904–905; Nobel 1984, pp. 310, 316).

In the last 30 years, the Colorado Plateau has experienced a 0.2 to 0.5 °C (32.36 to 32.9 °F) increase in average temperature, particularly in average fall-winter temperatures. Future climate projections forecast increases in both the average and extreme temperatures that are expected to result in less available soil moisture for plants (Schwinning *et al.* 2008, p. 14). In addition, the Colorado Plateau may be shifting towards a climate of reduced winter precipitation over the next 20 to 30 years. Winter accumulation, which recharges the soil moisture needed for spring vegetative growth, was below average in 11 years from 1996 to 2007. Similarly, spring precipitation was below average in 8 years from 1996 to 2006 (Hereford 2007, p. 6). By 2090, precipitation is predicted to decline by as much as 5 percent across the Colorado Plateau, placing greater stress on native plants and resulting in a greater susceptibility of existing ecosystems to be replaced by nonnative, invasive plant species (BLM 2011b, entire).

The Fickeisen plains cactus is adapted to the semi-arid climate of the Colorado Plateau by retracting underground in response to dry and cold climatic conditions. Weather patterns, timing of precipitation, and cool nighttime lows influence germination and seedling establishment of the Fickeisen plains cactus (Brack 2012, pers. comm.). If climate patterns move towards more aridity, the reproductive output of the Fickeisen plains cactus may be reduced. Increases in summer temperatures may lead to longer periods of time that the plant remains retracted underground, and temperatures may rise to a level that is beyond the plants' natural threshold for survival. Studies on cacti seedling survival have shown that seedlings are able to survive long periods of drought when they are larger and have the capacity to store enough water to endure their first dry season (Nobel 1984, p. 316). Seedlings of the Fickeisen plains cactus have been observed under mature plants, which act as nurse plants; the shading provided by a parent or nurse rock may increase their survival (NNHP 1994, p. 4). Increases in soil temperatures, coupled with below-average precipitation, may increase seedling mortality.

A study published in 2012 modeled the species' distribution of endemic plants on the Colorado Plateau (Krause and Pennington 2012, entire). It identified limiting factors that define the habitat needs of the species and the top-five predictor variables that influence their distribution. In level of

importance, the model included the Fickeisen plains cactus' and ranked the minimum temperature of the coldest month second, precipitation of driest quarter third, and isothermality fourth in predicting Fickeisen plains cactus distribution (Krause and Pennington 2012, p. 140). Of emphasis was the variable isothermality, the mean day-to-night temperature range compared to the annual temperature range, in predicting endemism on the Colorado Plateau. As nighttime lows during the winter season are predicted to increase, isothermality or the reduction in daily temperature variance may hinder seedling germination for the Fickeisen plains cactus for reasons discussed above.

On BLM lands, observed trend information from the four monitoring plots appear to correlate with changes in climate patterns. Increases in plant numbers and observed seedlings were documented between 1986 and roughly 1992. These years were characterized as a wet period where the annual precipitation was above the regional median on the Colorado Plateau (USGS 2002, p. 2). After 1992 through approximately 2005, when the region experienced a prolonged drought, the Fickeisen plains cactus among the plots experienced variable decreases in plant numbers. Monitoring of the Fickeisen plains cactus during years with below-average precipitation documented low recruitment, increased rodent predation, and an increase in the number of plants retracted or missing (Hughes 1988, p. 1; Hughes 1996c, p. 1; Roaque 2012, pers. comm.). In total, 817 plants were recorded as missing or retracted over the 13 years when this parameter was recorded. The years with the highest number of missing plants were from 1999 to 2007, the time period that corresponds to the drought in the Southwest. We do not believe all 817 missing plants are attributed solely to drought, but drought is likely a significant contributing factor to the observed decline in the populations.

The Navajo Nation is in one of these driest areas in the State. About 45 percent of all annual precipitation occurs during the warmer months of July through September. Climate data are variable on the reservation, but long-term information shows a drying trend has occurred since 1944, and a warming trend has occurred since the mid-1970s (Navajo Times 2011). The drought in the Four Corners region was officially recorded from 1999 to 2009, although many residents believe it began in 1996, which would make it the longest drought in Navajo history. The effects of the last drought have been particularly extreme on the population. For example, from 2001 to 2002, Navajo officials reported 30,000 cattle mortalities from lack of water and forage. Many traditional people on the reservation live in subsistence lifestyles. Over half of the population lives without indoor plumbing and are dependent on hauling water. Their water supplies are derived from shallow aquifers and are sensitive to dry conditions. When availability is low, families often use water supplies intended for livestock (Redsteer *et al.* 2010, p. 2).

In interviews with 50 tribal elders, Redsteer *et al.* (2010, p. 7) summarized the most common observations regarding drought: (1) Long-term decreases in the amount of annual snowfall over the past century; (2) decline in surface water features and water availability; (3) disappearance of springs and of plant and animal populations; and (4) changes in the frequency of wind, sand, and dust storms. These have been corroborated with other findings. Weiss *et al.* (2009, p. 5923) found that a significant increase in evapotranspiration occurred during the warmer months of the 2000s drought due to higher temperatures. It is likely that above-average spring temperatures are linked to a decrease in the amount of new growth among plants. It has been suggested that warmer spring temperatures lead to early germination. Plants respond by ending dormancy and begin using available soil moisture earlier and more quickly in the season. Then, they must survive longer dry periods before the start of the monsoons (Redsteer *et al.* 2010, p. 7).

Seasonal increases in temperature and changes in the timing of precipitation have likely influenced the observed 49 percent decline in the Salt Trail Canyon population. The observed low recruitment, high number of plants missing between years, and mortality can be thus be partly attributed to the drought (NNHP 2011b, pp. 4–5). Corresponding with regional climate patterns, annual precipitation during the monitoring period was below average for each year except for 2007. Winter precipitation was uncommonly high during 2005, the year before the monitoring plots were installed, and in 2010, the year that the plots were not monitored. While several winter storms came through the region, total rainfall accumulation was still below average during the 2011 monitoring period. Many of the plants that could not be located in 2011 were assumed dead because their vigor during previous surveys was rated as ''poor'' in 2009 (NNHP 2011b, p. 3). Some of these plants may have been retracted at the time. However, many plants observed between 2008 and 2011 failed to produce fruit or flower, and fruit buds were observed to be aborted. This suggests low seed production, which would cause that population to decline over time.

In summary, the climate on the Colorado Plateau and Navajo Nation is predicted to become warmer with reduced precipitation in the future. We have strong evidence to suggest that the Fickeisen plains cactus is being impacted by drought coupled with increased annual temperatures. We believe that the high number of dead and missing or retracted plants in all plots monitored is influenced by below-average winter or spring precipitation at the time when plants need soil moisture to flower. Poor reproduction in the Fickeisen plains cactus is likely to worsen in the future if climatic patterns shift towards becoming more arid with increased winter nighttime temperatures. With climatic models predicting future regional droughts, it is likely that all populations of the Fickeisen plains cactus will continue to be affected by drought and climate change. However, it is not clear if drought or climate change, of themselves, present population-level threats of extinction. It appears that drought and climate change in combination with rodent predation (see *Factor C. Disease or Predation,* below), as a combined effect, is the more likely scenario for population-level impacts to the plant. Additionally, the small and declining populations of the Fickeisen plains cactus make the species susceptible to natural environmental variability, including climate conditions. Therefore, based on our review of the available information, we conclude that climate change and drought are threats to the Fickeisen plains cactus populations.

Summary of Factor A

Based on our review of the best available scientific and commercial information, we conclude that fire associated with nonnative, invasive plant species; uranium mining; road construction and road maintenance; ORV use; and commercial development are not threats to the Fickeisen plains cactus and its habitat. We have determined that direct loss of plants and habitat loss and modification due to the direct and indirect effects of livestock grazing; nonnative, invasive plant species; and drought and climate change are threats to the Fickeisen plains cactus. These threats, in and of

themselves, may not result in significant population-level impacts to the Fickeisen plains cactus. However, the above factors appear to be acting synergistically, placing a major stress on the known plants monitored rangewide with little indication of population growth and age-class diversity. The populations for which we do not have reliable and current information on their status are likely in decline. These populations are also being impacted by drought and are also susceptible to the same level of threats as the monitored populations. Thus, the combined effects of each threat elevate the intensity and scope of impacts to the Fickeisen plains cactus and its habitat to where these threats are significant over time. Therefore, based on our review of the available information, we conclude that the present or threatened destruction, modification, or curtailment of the Fickeisen plains cactus habitat or range is a threat to the species.

Factor B. Overutilization for Commercial, Recreational, Scientific, or Educational Purposes

Unauthorized collection is a potential threat for all species of cacti, but it is a specific and definite threat for the genus *Pediocactus.* Their small size, large attractive flower, and rarity make *Pediocactus* species in general highly sought by collectors, growers, or gardens (Benson 1982, p. 243). *Pediocactus* are difficult to grow and maintain in cultivation. As plants grown in backyard gardens die, there is more demand for replacement plants. Unauthorized collection is currently a continuing problem for populations of the threatened *Pediocactus winkleri* (Winkler cactus) in south-central Utah (NPS 2004, p. 1; Borthwick 2012, pers. comm.).

We identified unauthorized collection of the Fickeisen plains cactus as a potential threat in our 2006 Candidate Notice of Review (71 FR 53756) and as a minor threat in our 2010 Species Assessment and Listing Priority Assignment Form. Phillips *et al.* (1982, p. 5) considered the Fickeisen plains cactus to be highly sought after and collected by commercial cactus collectors or hobbyists wherever it was found. For the period 1994 to 1997, the Convention on International Trade in Endangered Species (CITES) annual report documented a total of 5 specimens and 5015 seeds of Fickeisen plains cactus exported (Service 2001a, p. 4). However, we do not know what impact the unauthorized collection had on the Fickeisen plains cactus during that time. We are not aware of any evidence of unauthorized collection of the Fickeisen plains cactus within the last ten years. The BLM and the Navajo Nation have not observed or documented incidences of Fickeisen plains cacti being collected on their lands. In addition, we do not have information from the Arizona Native Plant Division indicating that unauthorized collection of Fickeisen plains cactus from their natural habitat has occurred (Reimer 2012, pers. comm.). Furthermore, apprehension of collectors or enforcement of the law is difficult for *Pediocactus* species considering they occur in remote areas that are not regularly patrolled.

Currently, collection pressure on the Fickeisen plains cactus and demand for plants in the wild appears to be low for several reasons. Over the past 20 years, there has been increased sensitivity towards collection of rare plants from their natural populations among collectors who are satisfied with taking photographs rather than live specimens (Brack 2005, pers. comm.; Brack 2012, pers. comm.). Secondly, the Fickeisen plains cactus has been difficult to grow in cultivation mainly because of its specificity to particular climate conditions (cold winter temperatures) (Brack 2012, pers. comm.). However, more experienced growers have successfully propagated seeds and grown seedlings in captivity. Growers in Europe have successfully gown the Fickeisen plains cactus in cultivation because their climate is similar to that of the Colorado Plateau (Brack 2012, pers. comm.). Currently, the Fickeisen plains cactus is available from commercial vendors who can meet the market demand for this rare plant which has helped alleviate collection pressures. Seeds of the Fickeisen plains cactus are also readily available for sale on the Internet to cactus hobbyists.

In summary, unauthorized collection is a threat for some *Pediocactus* species and a potential threat for the Fickeisen plains cactus. Based on the best available information, we have no evidence suggesting that overutilization of the Fickeisen plains cactus for recreational, scientific, or educational purposes has occurred or is negatively affecting individuals or populations within the species' range. We also have no evidence to suggest that overutilization of the Fickeisen plains cactus will occur in the future to such an extent that the survival of the species would be compromised. Therefore, overutilization for commercial, recreational, scientific, or educational purposes is not considered to be a threat to the Fickeisen plains cactus now, nor do we expect it to be in the future.

Factor C. Disease or Predation

We are aware of a single report of a potential diseased plant in the Shinumo Altar population on the Navajo Nation. In 1991, a mature plant in poor condition was observed to have a large hole through its caudex with orange-red material there. We have no further information regarding disease in other Fickeisen plains cactus populations. Therefore, we do not consider disease to be a threat to the Fickeisen plains cactus.

Rodent and Rabbit Predation

Small mammal herbivory on cactus species is known to occur during dry conditions when animals seek available moisture from the plant or available food from cactus fruit (Butterwick 1987, p. 3; Phillips and Phillips 2004, pp. 14–15; Sivinski and McDonald 2007, p. 104). Because of their small size and spongy spines, the Fickeisen plains cactus may be less protected from animals than other spiny cactus species. Herbivory, primarily by rodents, on the Fickeisen plains cactus has been reported only on BLM lands; however, it likely occurs throughout the range.

The BLM reported a total of 56 plant mortalities associated with rodent predation in the years 1988, 1989, 1990, and 1992. All of the four plots have had reported rodent predation. The greatest losses were reported at Dutchman Draw plot, with 21 plants lost between 1988 and 1990 (Hughes 1988, p. 2; Hughes 1989, p. 2; Hughes 1990, p. 2), and 26 plants at the North Canyon plot in 1992 (Roaque 2012, pers. comm.). Correspondingly, the winter-spring precipitation in 1992 was below average. Small mammal burrows have been observed at the Dutchman Draw, Clayhole Ridge (Robertson 2011, p. 1), and South Canyon (Travis 1987, p. 4) populations. We do not have information about these burrows; however, they may be contributing to the high number of missing or retracted plants within plots. Hughes (1996a, p. 51) believed that heavy cattle grazing may in some part contribute to high incidences of rodent predation through competition for available forage, particularly during periods of drought that, in turn, cause rodents to eat the cactus. While the relationship between drought and rodent predation is less obvious on BLM lands, mortality associated with rodent herbivory on other *Pediocactus* species suggests that the Fickeisen plains cactus is likely being impacted rangewide in a similar fashion.

Monitoring efforts on other *Pediocactus* species reported high rates

of plant mortality associated with rodent herbivory. The BLM found that rodent predation resulted in 81 Brady pincushion cactus mortalities over a 15-year period (BLM 2007b, p. 55). Phillips and Phillips (1995, p. 7) reported 23 Peebles Navajo cactus individuals were lost due to herbivory in 1989, which was attributed to a dry and warmer than normal winter. Sivinski and McDonald (Service 2010, p. 5) identified rabbit and rodent predation as a significant cause of mortality on the *Pediocactus knowltonii* (Knowlton's cactus). They also found that predation rates increase during periods of drought, and no significant germination events had been observed over a 14-year period (Service 2010, p. 12). They infer that low recruitment may be due to high seed predation by rodents in 1993, and they find that seeds of mature fruit are readily eaten by rodents as the fruit ripens, resulting in little seed left to mature.

We acknowledge that small mammal herbivory is natural under drought conditions. While the data are variable for the Fickeisen plains cactus, there is adequate evidence from monitoring studies on this species and other *Pediocactus* species that rodent predation is high in drought years. Climatic conditions throughout the Southwest are predicted to continue to warm with less precipitation in the future as previously discussed. We, therefore, anticipate that rodent or rabbit herbivory may increase in the future as a result of predicted changes in climate. In addition, rodent predation results in the mortality of a large number of individuals, effectively causing population declines in a population that is already small in number. Although we lack clear evidence of the scope of the impact that rodent predation has had on the Fickeisen plains cactus and its seeds, taken in conjunction with other habitat disturbances occurring across its range, low recruitment, and small population size, rodent predation is likely to rise to the level where it becomes a threat to the plant.

Factor D. The Inadequacy of Existing Regulatory Mechanisms

Please refer to the two introductory paragraphs of the Factor D discussion presented above for the acuña cactus. There are no existing laws or regulations in place that address the primary threats to the Fickeisen plains cactus and its habitat from livestock grazing; nonnative, invasive species; rodent predation; drought; or climate change. Those legal and regulatory mechanisms that are in place appear to be adequate to protect the plant.

The Fickeisen plains cactus is listed as a highly safeguarded native plant under the Arizona Native Plant Law (Arizona Revised Statutes, Chapter 7, 2007, entire). Removal of highly safeguarded native plants and their parts is prohibited on public land except by permit. They are also protected from international trade by CITES; however, CITES does not regulate take or domestic trade. While these measures lessen the impact from regulated collection, as described above, there is no indication that an active trade for this plant exists or poses a threat to this plant.

The BLM lists the Fickeisen plains cactus as a sensitive species (BLM 2007a, p. 3–87). As described in the BLM Manual section 6840 (BLM 2008b, pp. 37–38), the BLM will focus sensitive species management on maintaining species' habitat in functional ecosystems, ensuring the species is considered in land management decisions, and prioritizing conservation that emphasizes habitat needs for the species, thereby preventing the need to list the species under the Act. The BLM has the ability to implement conservation measures and best management practices to reduce the threats to the Fickeisen plains cactus from livestock grazing, but we are not aware of any efforts to minimize cattle impacts to the plant or its habitat. In their approved 2008 Resource Management Plan, the BLM designated vegetative habitat areas at Twist Hills and Upper Clayhole Valley for the Fickeisen plains cactus (BLM 2008a, p. 2–41). Management actions that apply to vegetative habitat areas include increased emphasis on protection of the species; increased consideration during National Environmental Policy Act (NEPA; 42 U.S.C. 4321 *et seq.*) analyses; and the ability to modify, mitigate, postpone, or restrict proposed actions to minimize effects to the species. Species-specific conservation measures will apply to management of these and all other areas of occupied and unoccupied habitat for special status species. Because these vegetative habitat areas were recently designated, beneficial effects to the plant and its habitat have yet to be documented.

On the Navajo Nation, the Fickeisen plains cactus is a Group 3 species on the Navajo Endangered Species List. Group 3 species are those ''species or subspecies whose prospects of survival or recruitment are likely to be in jeopardy in the foreseeable future'' (Navajo Nation Division of Natural Resources 2008, entire). Species listed pursuant to the Navajo Nation Tribal Code 17, Subsection 507 are protected by take (17 N.N.C. § 507). In addition to its listed species protection, 9 of the 15 populations are within areas designated as a Preserve, including the three largest populations. No new activity or development is allowed within these Preserves, unless it is compatible with management goals established by the Navajo Nation Department of Fish and Wildlife for that area. Any development project proposed within a Preserve requires a biological evaluation be prepared. The biological evaluation must demonstrate that the development activity is compatible with management goals for the Preserve, as defined by the Navajo Nation Department of Fish and Wildlife Resource Land Use Clearance Policies. These policies are also used by Navajo Nation Department of Fish and Wildlife to ensure that proposed development activity in a Preserve will not negatively affect any listed species, including the Fickeisen plains cactus. It does not, however, apply to daily activities, such as livestock herding and any tourist activities that cannot be easily regulated (e.g., driving and parking at unofficial overlooks) (Hazelton 2012c, pers. comm.). It also does not include approved pre-existing activities.

On the Cataract Ranch, privately owned parcels occupied by the Fickeisen plains cactus are under a conservation easement held by TNC (TNC 2000, entire). These deeded lands prohibit any development activities from occurring on these parcels and protect the inherent value of the land for perpetuity. Daily activities such as livestock grazing and range improvements are permitted. Approximately 29 percent of the known Fickeisen plains cactus population is protected by the conservation easement.

In summary, there are no existing legal or regulatory mechanisms in place to address the primary threats to the Fickeisen plains cactus and its habitat. While the BLM has the ability to provide habitat protection for the Fickeisen plains cactus, any actions would be voluntary under conservation measures aimed to improve the status of sensitive species. The existing legal or regulatory mechanisms that are currently in place do appear to provide adequate protection to the Fickeisen plains cactus and its habitat in the manner they were intended to provide.

Factor E. Other Natural or Manmade Factors Affecting Its Continued Existence

Small Population Size

The Fickeisen plains cactus is a rare, endemic cactus that is restricted to a particular soil type. Factors such as the small population size, low population density, the isolation of populations between occurrences, and a poor mechanism for seed dispersal renders this cactus vulnerable to extinction from human and natural disturbances. We recognize that this species appears to have always been rare, yet continues to survive, and could be well equipped to continue to exist into the future. Many naturally rare species have persisted for long periods within small geographic areas, and many naturally rare species exhibit traits that allow them to persist despite their small population sizes. Consequently, the fact that a species is rare does not necessarily predispose it to being an endangered or threatened species.

However, this species has shown a marked decline in recent years, and populations across its range do not appear to be recovering. This indicates that there is a heightened risk of extinction, and the contributing factors of ever decreasing population size, coupled with poor seed dispersal, increase the extinction risk. Small populations that are restricted by habitat requirements are more vulnerable to the effects of climate change, such as prolonged droughts and increased fire frequencies. Although small population size and climate change make the species intrinsically more vulnerable, we are uncertain whether they would rise to the level of threat by themselves. However, when combined with the threats from livestock grazing, rodent and rabbit predation, and nonnative, invasive species, small population size likely exacerbates the effects of these threats on the Fickeisen plains cactus.

Proposed Determination for the Fickeisen Plains Cactus

We have carefully assessed the best scientific and commercial information available regarding the past, present, and future threats to the Fickeisen plains cactus. We find that the species is in danger of extinction due to the current and ongoing modification and destruction of its habitat and range (Factor A) from ongoing and future livestock grazing; nonnative, invasive species; and long-term drought. The most significant factors threatening the Fickeisen plains cactus across its range are long-term drought and warmer winters occurring in the past several decades and projected to continue with the effects of climate change. We find that livestock grazing and nonnative species, in combination with drought and climate change, exacerbate the threats to this species (Factor A). We also find predation (Factor C) and other natural or manmade factors are threats to the Fickeisen plains cactus (Factor E). We do not find any threats to the species from unauthorized collection (Factor B). We find no inadequate existing regulatory mechanisms (Factor D).

The Act defines an endangered species as any species that is ''in danger of extinction throughout all or a significant portion of its range'' and a threatened species as any species ''that is likely to become endangered throughout all or a significant portion of its range within the foreseeable future.'' We find that the Fickeisen plains cactus is presently in danger of extinction throughout its entire range based on documented loss of individuals on the majority of its range, little to no recruitment, and continuation of the threats, as described above. Therefore, on the basis of the best available scientific and commercial information, we propose listing the Fickeisen plains cactus as an endangered species in accordance with sections 3(6) and 4(a)(1) of the Act.

The elevated risk of extinction of the Fickeisen plains cactus is a result of the cumulative stressors on the species and its habitat. We have detailed information about population trends from 5 large populations, all of which show a significant decline in overall population, reduction in reproductive adults, little to no seedlings, and low representation of age-class diversity. The decline of these 5 populations is likely indicative of what is occurring in other populations that are smaller, more isolated and not as well studied. Some of these smaller populations have already shown declines in plants numbers; at some sites, plants no longer are found. Information from the 27 populations would increase our knowledge of the species, but it is uncertain if these populations will be monitored in the future due to resource limitations and access to the land. Losses of adult plants in a naturally rare, endemic species exacerbate the species vulnerability to extinction because the older, larger adults contribute more to the population's growth. In the Fickeisen plains cactus, water and heat stress results in reduced flower and seed production, and seedling survival is dependent on winter precipitation and soil moisture. Climate change is anticipated to increase drought periods and warming winters. This combination is expected to continue the documented trend of mortality exceeding recruitment across all populations. All of these factors contribute together to heighten the risk of extinction and lead to our finding that the Fickeisen plains cactus is in danger of extinction, and thus meets the definition of an endangered species.

Listing the Fickeisen plains cactus as a threatened species is not the appropriate determination because the ongoing threats described above are severe enough to create the immediate risk of extinction. The continued loss of reproductive adults without adequate recruitment poses a significant and immediate risk of extinction to the species throughout the species' range, and is not restricted to any particular significant portion of that range. All of these factors combined lead us to conclude that the threat of extinction is high and immediate, thus warranting a determination of endangered species status rather than threatened species status for the Fickeisen plains cactus.

Under the Act and our implementing regulations, a species may warrant listing if it is an endangered species or a threatened species throughout all or a significant portion of its range. The threats to the survival of the species occur throughout the Fickeisen plains cactus' range and are not restricted to any particular significant portion of that range. Accordingly, our assessment and proposed determination applies to the species throughout its entire range.

Available Conservation Measures for the Acuña Cactus and the Fickeisen Plains Cactus

Conservation measures provided to species listed as endangered or threatened under the Act include recognition, recovery actions, requirements for Federal protection, and prohibitions against certain practices. Recognition through listing results in public awareness and conservation by Federal, State, Tribal, and local agencies; private organizations; and individuals. The Act encourages cooperation with the States and requires that recovery actions be carried out for all listed species. The protection required by Federal agencies and the prohibitions against certain activities are discussed, in part, below.

The primary purpose of the Act is the conservation of endangered and threatened species and the ecosystems upon which they depend. The ultimate goal of such conservation efforts is the recovery of these listed species, so that they no longer need the protective measures of the Act. Subsection 4(f) of

the Act requires the Service to develop and implement recovery plans for the conservation of endangered and threatened species. The recovery planning process involves the identification of actions that are necessary to halt or reverse the species' decline by addressing the threats to its survival and recovery. The goal of this process is to restore listed species to a point where they are secure, self-sustaining, and functioning components of their ecosystems.

Recovery planning includes the development of a recovery outline shortly after a species is listed, preparation of a draft and final recovery plan, and revisions to the plan as significant new information becomes available. The recovery outline guides the immediate implementation of urgent recovery actions and describes the process to be used to develop a recovery plan. The recovery plan identifies site-specific management actions that will achieve recovery of the species, measurable criteria that determine when a species may be downlisted or delisted, and methods for monitoring recovery progress. Recovery plans also establish a framework for agencies to coordinate their recovery efforts and provide estimates of the cost of implementing recovery tasks. Recovery teams (comprised of species experts, Federal and State agencies, nongovernment organizations, and stakeholders) are often established to develop recovery plans. When completed, the recovery outline, draft recovery plan, and the final recovery plan will be available on our Web site (*http://www.fws.gov/endangered*), or from our Arizona Ecological Services Field Office (see **FOR FURTHER INFORMATION CONTACT**).

Implementation of recovery actions generally requires the participation of a broad range of partners, including other Federal agencies, States, Tribes, nongovernmental organizations, businesses, and private landowners. Examples of recovery actions include habitat restoration (e.g., restoration of native vegetation), research, captive propagation and reintroduction, and outreach and education. The recovery of many listed species cannot be accomplished solely on Federal lands because their range may occur primarily or solely on non-Federal lands. To achieve recovery of these species requires cooperative conservation efforts on private, State, and Tribal lands.

If these species are listed, funding for recovery actions will be available from a variety of sources, including Federal budgets, State programs, and cost share grants for non-Federal landowners, the academic community, and nongovernmental organizations. In addition, under section 6 of the Act, the State of Arizona would be eligible for Federal funds to implement management actions that promote the protection and recovery of the acuña cactus and the Fickeisen plains cactus. Information on our grant programs that are available to aid species recovery can be found at: *http://www.fws.gov/grants.*

Although the acuña cactus and the Fickeisen plains cactus are only proposed for listing under the Act at this time, please let us know if you are interested in participating in recovery efforts for either of these species. Additionally, we invite you to submit any new information on these species whenever it becomes available and any information you may have for recovery planning purposes (see **FOR FURTHER INFORMATION CONTACT**).

Section 7(a) of the Act requires Federal agencies to evaluate their actions with respect to any species that is proposed or listed as endangered or threatened and with respect to its critical habitat, if any is designated. Regulations implementing this interagency cooperation provision of the Act are codified at 50 CFR part 402. Section 7(a)(4) of the Act requires Federal agencies to confer with the Service on any action that is likely to jeopardize the continued existence of a species proposed for listing or result in destruction or adverse modification of proposed critical habitat. If a species is listed subsequently, section 7(a)(2) of the Act requires Federal agencies to ensure that activities they authorize, fund, or carry out are not likely to jeopardize the continued existence of the species or destroy or adversely modify its critical habitat. If a Federal action may affect a listed species or its critical habitat, the responsible Federal agency must enter into formal consultation with the Service.

Federal agency actions within both species' habitat that may require conference or consultation, or both, as described in the preceding paragraph include any management actions that could result in impacts to soil characteristics or seedbank viability, pollinators or their habitat, and associated native vegetation community, and any other landscape-altering activities on Federal lands administered by Federal agencies, such as: Issuance of section 404 Clean Water Act (33 U.S.C. 1251 et seq.) permits by the U.S. Army Corps of Engineers; construction and management of gas pipeline and power line rights-of-way by the Federal Energy Regulatory Commission; reauthorization of grazing permits by the BLM and the U.S. Forest Service, and construction and maintenance of roads or highways by the Federal Highway Administration.

The Act and its implementing regulations set forth a series of general prohibitions and exceptions that apply to endangered plants. All prohibitions of section 9(a)(2) of the Act, implemented by 50 CFR 17.61, apply. These prohibitions, in part, make it illegal for any person subject to the jurisdiction of the United States to import or export, transport in interstate or foreign commerce in the course of a commercial activity, sell or offer for sale in interstate or foreign commerce, or remove and reduce the species to possession from areas under Federal jurisdiction. In addition, for plants listed as an endangered species, the Act prohibits the malicious damage or destruction on areas under Federal jurisdiction and the removal, cutting, digging up, or damaging or destroying of such plants in knowing violation of any State law or regulation, including State criminal trespass law. Certain exceptions to the prohibitions apply to agents of the Service and State conservation agencies. The acuña cactus and the Fickeisen plains cactus are protected under the Arizona Native Plant Law as a highly safeguarded plant, which makes it unlawful for any person to destroy, dig up, cut, collect, mutilate, harvest or take, and place into possession any of these plants on public lands (Arizona Revised Statutes, Chapter 7, 2007, entire). However, the Arizona Native Plant Law does not prohibit landowners from removing or destroying protected plants on their property. They are required to notify the Arizona Department of Agriculture 20 to 60 days prior to destruction of a protected native plant on their private property. However, the Arizona Native Plant Law does not afford protection to the habitat of either cactus species, and there is no protection for the acuña cactus or the Fickeisen plains cactus on State lands, above what is allowable under the Arizona Native Plant Law.

We may issue permits to carry out otherwise prohibited activities involving endangered and threatened plant species under certain circumstances. Regulations governing permits are codified at 50 CFR 17.62 for endangered plants, and at 17.72 for threatened plants. With regard to endangered plants, a permit must be issued for the following purposes: For scientific purposes, or for the enhancement of propagation or survival of the species.

It is our policy, as published in the **Federal Register** on July 1, 1994 (59 FR 34272), to identify to the maximum extent practicable at the time a species

is listed, those activities that would or would not constitute a violation of section 9 of the Act. The intent of this policy is to increase public awareness of the effect of a proposed listing on proposed and ongoing activities within the range of species proposed for listing. The following activities could potentially result in a violation of section 9 of the Act. Unauthorized collecting, handling, possessing, selling, delivering, carrying, or transporting of the species, including import or export across State lines and international boundaries, except for properly documented antique specimens of these taxa at least 100 years old, as defined by section 10(h)(1) of the Act.

Questions regarding whether specific activities would constitute a violation of section 9 of the Act should be directed to the Arizona Ecological Services Field Office (see **FOR FURTHER INFORMATION CONTACT**).

Critical Habitat

Background

Critical habitat is defined in section 3 of the Act as:

(1) The specific areas within the geographical area occupied by the species, at the time it is listed in accordance with the Act, on which are found those physical or biological features

(a) Essential to the conservation of the species and

(b) Which may require special management considerations or protection; and

(2) Specific areas outside the geographical area occupied by the species at the time it is listed, upon a determination that such areas are essential for the conservation of the species.

Conservation, as defined under section 3 of the Act, means to use and the use of all methods and procedures that are necessary to bring an endangered or threatened species to the point at which the measures provided pursuant to the Act are no longer necessary. Such methods and procedures include, but are not limited to, all activities associated with scientific resources management such as research, census, law enforcement, habitat acquisition and maintenance, propagation, live trapping, and transplantation, and, in the extraordinary case where population pressures within a given ecosystem cannot be otherwise relieved, may include regulated taking.

Critical habitat receives protection under section 7 of the Act through the requirement that Federal agencies ensure, in consultation with the Service, that any action they authorize, fund, or carry out is not likely to result in the destruction or adverse modification of critical habitat. The designation of critical habitat does not affect land ownership or establish a refuge, wilderness, reserve, preserve, or other conservation area. Such designation does not allow the government or public to access private lands. Such designation does not require implementation of restoration, recovery, or enhancement measures by non-Federal landowners. Where a landowner requests Federal agency funding or authorization for an action that may affect a listed species or critical habitat, the consultation requirements of section 7(a)(2) of the Act would apply, but even in the event of a destruction or adverse modification finding, the obligation of the Federal action agency and the landowner is not to restore or recover the species, but to implement reasonable and prudent alternatives to avoid destruction or adverse modification of critical habitat.

Under the first prong of the Act's definition of critical habitat, areas within the geographical area occupied by the species at the time it was listed are included in a critical habitat designation if they contain physical or biological features (1) essential to the conservation of the species and (2) which may require special management considerations or protection. For these areas, critical habitat designations identify, to the extent known using the best scientific and commercial data available, those physical or biological features that are essential to the conservation of the species (such as space, food, cover, and protected habitat). In identifying those physical and biological features within an area, we focus on the principal biological or physical constituent elements (primary constituent elements such as roost sites, nesting grounds, seasonal wetlands, water quality, tide, soil type) that are essential to the conservation of the species. Primary constituent elements are the specific elements of physical or biological features that provide for a species' life-history processes, and are essential to the conservation of the species.

Under the second prong of the Act's definition of critical habitat, we can designate critical habitat in areas outside the geographical area occupied by the species at the time it is listed, upon a determination that such areas are essential for the conservation of the species. We designate critical habitat in areas outside the geographical area occupied by a species only when a designation limited to its range would be inadequate to ensure the conservation of the species.

Section 4 of the Act requires that we designate critical habitat on the basis of the best scientific data available. Further, our Policy on Information Standards Under the Endangered Species Act (published in the **Federal Register** on July 1, 1994 (59 FR 34271)), the Information Quality Act (section 515 of the Treasury and General Government Appropriations Act for Fiscal Year 2001 (Pub. L. 106–554; H.R. 5658)), and our associated Information Quality Guidelines, provide criteria, establish procedures, and provide guidance to ensure that our decisions are based on the best scientific data available. They require our biologists, to the extent consistent with the Act and with the use of the best scientific data available, to use primary and original sources of information as the basis for recommendations to designate critical habitat.

When we are determining which areas should be designated as critical habitat, our primary source of information is generally the information developed during the listing process for the species. Additional information sources may include the recovery plan for the species, articles in peer-reviewed journals, conservation plans developed by States and counties, scientific status surveys and studies, biological assessments, other unpublished materials, or experts' opinions or personal knowledge.

Habitat is dynamic, and species may move from one area to another over time. We recognize that critical habitat designated at a particular point in time may not include all of the habitat areas that we may later determine are necessary for the recovery of the species. For these reasons, a critical habitat designation does not signal that habitat outside the designated area is unimportant or may not be needed for recovery of the species. Areas that are important to the conservation of the species, both inside and outside the critical habitat designation, will continue to be subject to: (1) Conservation actions implemented under section 7(a)(1) of the Act, (2) regulatory protections afforded by the requirement in section 7(a)(2) of the Act for Federal agencies to ensure their actions are not likely to jeopardize the continued existence of any endangered or threatened species, and (3) the prohibitions of section 9 of the Act if actions occurring in these areas may affect the species. Federally funded or permitted projects affecting listed species outside their designated critical

habitat areas may still result in jeopardy findings in some cases. These protections and conservation tools will continue to contribute to recovery of this species. Similarly, critical habitat designations made on the basis of the best available information at the time of designation will not control the direction and substance of future recovery plans, habitat conservation plans (HCPs), or other species conservation planning efforts if new information available at the time of these planning efforts calls for a different outcome.

Prudency Determination for the Acuña Cactus and the Fickeisen Plains Cactus

Section 4(a)(3) of the Act, as amended, and implementing regulations (50 CFR 424.12), require that, to the maximum extent prudent and determinable, the Secretary designate critical habitat at the time the species is determined to be an endangered or threatened species. Our regulations (50 CFR 424.12(a)(1)) state that the designation of critical habitat is not prudent when one or both of the following situations exist: (1) The species is threatened by taking or other human activity, and identification of critical habitat can be expected to increase the degree of threat to the species; or (2) such designation of critical habitat would not be beneficial to the species.

There is no documentation that the acuña cactus and the Fickeisen plains cactus are threatened by collection. Therefore, they are unlikely to experience increased threats by the identification and mapping of critical habitat. In the absence of a finding that the designation of critical habitat would increase threats to a species, if there are any benefits to a critical habitat designation, then a prudent finding is warranted. The potential benefits of designation include: (1) Triggering consultation under section 7 of the Act, in new areas for actions in which there may be a Federal nexus where it would not otherwise occur because, for example, it is or has become unoccupied or the occupancy is in question; (2) focusing conservation activities on the most essential features and areas; (3) providing educational benefits to State or county governments or private entities; and (4) preventing people from causing inadvertent harm to the species.

The primary regulatory effect of critical habitat is the Act's section 7(a)(2) requirement that Federal agencies refrain from taking any action that destroys or adversely modifies critical habitat. At present, the acuña cactus and the Fickeisen plains cactus occurs on Federal, State, Tribal, and private lands in Arizona. Lands proposed for designation as critical habitat would be subject to Federal actions that trigger the section 7 consultation requirements. These include land management actions and permitting by the BLM, OPCNM, and BMGR for the acuña cactus; and by the BLM and Kaibab National Forest for the Fickeisen plains cactus. In addition, lands proposed for designation as critical habitat, whether or not under Federal jurisdiction, may be subject to Federal actions that trigger the section 7 consultation requirement, such as the granting of Federal monies or Federal permits.

There may also be some educational or informational benefits to the designation of critical habitat. Educational benefits include the notification of lessees and the general public of the importance of protecting habitat.

Although we make a detailed determination of the habitat needs of a listed species during the recovery planning process, the Act has no provision to delay designation of critical habitat until such time as a recovery plan is prepared. We reviewed the available information pertaining to habitat characteristics where these two species are located. This and other information represent the best scientific data available and lead us to conclude that the designation of critical habitat is prudent for the acuña cactus and the Fickeisen plains cactus.

Critical Habitat Determinability for the Acuña Cactus and the Fickeisen Plains Cactus

As stated above, section 4(a)(3) of the Act requires the designation of critical habitat concurrently with the species' listing ''to the maximum extent prudent and determinable.'' Our regulations at 50 CFR 424.12(a)(2) state that critical habitat is not determinable when one or both of the following situations exist:

(i) Information sufficient to perform required analyses of the impacts of the designation is lacking, or

(ii) The biological needs of the species are not sufficiently well known to permit identification of an area as critical habitat.

When critical habitat is not determinable, the Act provides for an additional year to publish a critical habitat designation (16 U.S.C. 1533(b)(6)(C)(ii)).

We reviewed the available information pertaining to the biological needs of the species and habitat characteristics where this species is located. This and other information represent the best scientific data available and led us to conclude that the designation of critical habitat is determinable for the acuña cactus and the Fickeisen plains cactus.

Acuña Cactus

Physical or Biological Features

In accordance with section 3(5)(A)(i) and 4(b)(1)(A) of the Act and regulations at 50 CFR 424.12, in determining which areas within the geographical area occupied by the species at the time of listing to designate as critical habitat, we consider the physical or biological features that are essential to the conservation of the species and which may require special management considerations or protection. These include, but are not limited to:

(1) Space for individual and population growth and for normal behavior;

(2) Food, water, air, light, minerals, or other nutritional or physiological requirements;

(3) Cover or shelter;

(4) Sites for breeding, reproduction, or rearing (or development) of offspring; and

(5) Habitats that are protected from disturbance or are representative of the historical, geographic, and ecological distributions of a species.

We derive the specific physical or biological features required for the acuña cactus from studies of this species' habitat, ecology, and life history as described below. We have determined that the physical or biological features described below are essential for the acuña cactus.

Habitat for Individual and Population Growth, Including Sites for Germination, Pollination, Reproduction, Pollen and Seed Dispersal, and Seed Banks

Pollination and Pollen Dispersal—Preservation of the mix of species and interspecific interactions they encompass greatly improves the chances for on-site survival of rare species (Tepedino *et al.* 1996, p. 245). Bee nesting habitat, foraging plants, and corridors must be preserved to protect the acuña cactus (Buchmann 2012, pers. comm.; McDonald 2007, p. 4). The acuña cactus relies solely on the production of seeds for reproduction, with pollination highly linked to the acuña cactus' survival. A lack of pollinators would lead to a reduction of seed production that would lead, in turn, to a gradual reduction in the seed bank (Wilcock and Neiland 2002, p. 276). Although viability of seed in the

seed bank is unknown, germination trials in the greenhouse suggest the seeds are short-lived (Rutman 2007, p. 7), thus this could result in decrease in the acuña cactus population's persistence.

Successful pollination depends on the pollinator species needed and the distance the pollinator can travel between flowers (McDonald 2005, p. 15). Acuña cacti are pollinated by a suite of bees from the Andrenidae, Anthophoridae, Anthophorinae, Halictidae, and Megachilidae families; however, the most abundant, robust, and consistent visitors in a 2-year study at OPCNM were leafcutter bee (*Megachile palmensis*) and cactus bee (*Diadasia rinconis*) (Johnson 1992, p. 406). Leafcutter and cactus bees are native cactus specialist bees requiring a sufficient quantity of the acuña and other cacti pollen throughout their foraging season to provide a continuous source of pollen to provision their nests and support their own survivorship (Blair and Williamson 2008, p. 428).

No studies of pollinator dispersal distance have been conducted for the acuña cactus; however, in a study of a similar rare cactus of Arizona's Sonoran Desert, the Pima pineapple cactus, McDonald (2005, p. 29) determined that the maximum distance that the cactus bees travelled between Pima pineapple cactus individuals was 900 m (2,953 ft). The maximum distance travelled by the leafcutter bee is thought to be less than this (Buchmann 2012, pers. comm.). This distance around individual cacti is needed to support pollinator foraging, nesting, and survivorship.

Therefore, based on our review of the best available information, we identify a pollination area with a radius of 900 m (2,953 ft) around each reproducing acuña cactus plant as a physical or biological feature of acuña cactus habitat.

Seed Dispersal, Germination, Growth, and Seed Banks—Bare soils within the seed dispersal range of the acuña cactus are necessary for recruitment and soil seed banking. Primary and secondary dispersal of these seeds can occur via a number of mechanisms including gravity, ants, wind, or rain (Butterwick 1982–1992, entire; Rutman 1996b, pers. comm.; Rutman 2001, pers. comm.; Anderson 2011, p. 1). Primary dispersal is the movement of seeds short distances from the plant, whereas secondary dispersal involves the redistribution of seeds by living (e.g., insects) or non-living (e.g., wind) factors (van Rheede van Oudtshorrn and van Rooyen 1999, pp. 186–187).

As evidenced by their commonly clumped habit, the majority of the acuña cactus seeds are dispersed by gravity; that is, they fall very close to the mother plant, which serves as a nurse plant for germination (Johnson *et al.* 1993, p. 178). Although with this type of dispersal the distance seeds travel is limited, the immediate environment of the mother plant is typically very suitable for establishment, and these seeds have a better chance of germination, establishment, and survival than seeds dispersed by other mechanisms (van Rheede van Oudtshorrn and van Rooyen 1999, p. 91).

Ants have been reported to both transport and consume the seeds of the acuña cactus (Butterwick 1982–1992, entire; Rutman 1996b, pers. comm.; Rutman 2001, pers. comm.; Anderson 2011, p. 1). Transported seeds may be dropped, discarded, or buried at either an appropriate or inappropriate depth for germination and emergence (van Rheede van Oudtshorrn and van Rooyen 1999, p. 15). Transported seed has the benefit of reduced competition from other seeds and reduced rodent predation found near the mother plant (O'Dowd and Hay 1980, p. 536; Vander Wall *et al.* 2005, p. 802). The maximum distance seeds are dispersed by ants is typically less than 3 m (9.8 ft) and rarely more than 10 m (32.8 ft) (van Rheede van Oudtshorrn and van Rooyen 1999, p. 186).

The maximum distance seeds are dispersed by wind depends on many factors including the height of the plant, characteristics of the surrounding vegetation, seed mass and size, and wind conditions (van Rheede van Oudtshorrn and van Rooyen 1999, p. 186). Secondary dispersal by wind can be farther in deserts, where vegetation is widely spaced and interspaces between trees and shrubs support wind velocities as much as four times higher than under trees and shrubs (van Rheede van Oudtshorrn and van Rooyen 1999, p. 187). Wind-blown soil, litter, and small seeds accumulate under shrubs and trees, or in soil surface depressions (Shreve 1942, p. 205; van Rheede van Oudtshorrn and van Rooyen 1999, p. 187).

Dispersal of seed from rain wash or sheet flow over the ground is considered to occur across a relatively short distance; in hot deserts, many plants disperse seed by rain (van Rheede van Oudtshorrn and van Rooyen 1999, pp. 69, 76). The distance that the acuña cactus seeds travel by either wind or water is not known; however, spacing of associated nurse trees and shrubs where soil, litter, and seed could accumulate is roughly 8 m (26.2 ft). This number was determined by using the average height of the largest tree associate, palo verde, as height and density are closely related (Shreve 1942, pp. 202–203; Kearney and Peebles 1951, p. 407).

Therefore, based on our review of the best available information regarding the maximum distance that seed may be expected to disperse, and within which the acuña cactus seed banks, seedling establishment, and seedling growth can occur, we identify bare soils immediately adjacent to and within 10 m (32.8 ft) of existing reproductive acuña cactus plants as a physical or biological feature of acuña cactus habitat.

Appropriate Geological Layers and Topography That Support Individual Acuña Cactus Plants

Geology—Bedrock and soil chemistry could help explain the current distribution of the acuña cactus across small islands of habitat in southern Arizona. Various reports describe the acuña cactus occurring on both fine and course textured soils derived from volcanic, granitic, and metamorphic rocks (Geraghty and Miller 1997, p. 3; Rutman 2007, pp. 1–2). Specifically, parent rock materials of preferred habitat include extrusive felsic volcanic rocks of rhyolite, andesite, and tuff, and intrusive igneous rocks composed of granite, granodiorite, diorite, and quartz monzonite (Rutman 2007, pp. 1–2).

We applied this knowledge of the acuña cactus geologic habitat preference by analyzing geology features and known plant locations attained for populations occurring within the United States using Geographic Information Systems (GIS). We determined 11 geologic feature classes that occur within the known locations of the acuña cactus in the United States (Arizona State Land Department 2012, GIS data layer). These feature classes can be summarized as Volcanic rocks from the middle Miocene to Oligocene and from the Jurassic; Granitoid rocks from the early Tertiary to Late Cretaceous and from the Jurassic; Granitic rocks from the early Tertiary to Late Cretaceous; Metamorphic rocks from the early Proterozoic; and surficial deposits from the Holocene to the latest Pliocene. Therefore, based on our review of the best available information regarding bedrock geology and associated soils required by the acuña cacti, we identify the presence of any one of these 11 feature classes as a physical or biological feature of acuña cactus habitat. These feature classes can be further summarized to include the following rock types as identified in the literature for this species: rhyolite, andesite, tuff, granite, granodiorite,

diorite, or Cornelia quartz monzonite (Rutman 2007, pp. 1, 2).

Topography—The acuña cactus is known to occur in valley bottoms and on ridge tops or small knolls, on slopes up to 30 percent (Phillips *et al.* 1982, p. 4; Geraghty and Miller 1997, p. 3). We applied this knowledge of the acuña topographic habitat preference by analyzing topography features using a digital elevation model in GIS. Therefore, based on our review of the best available information regarding topography, we identify valley bottoms, ridge tops, and small knolls with slopes of 30 percent or less as a physical or biological feature of acuña cactus habitat.

Appropriate Vegetation Community and Elevation Range That Support Individual Acuña Cactus Plants

Nurse Plants—Known populations of the acuña cactus have been reported from between 365 and 1,150 m (1,198 to 3,773 ft) elevation within the paloverde-cacti-mixed scrub series of the Arizona Upland Subdivision of the Sonoran Desert-scrub (Brown 1994, p. 200; Arizona Rare Plant Guide Committee 2001, unnumbered pages; AGFD 2011, entire). This scrubland or low woodland contains leguminous trees, shrubs, and succulents including *Cercidium microphyllum* (palo verde), *Olneya tesota* (ironwood), *Larrea tridentata* var. *tridentata* (creosote bush), *Ambrosia* spp. (bursage), and *Carnegia gigantea* (saguaro). The acuña cactus seedlings benefit from the protection of these native Sonoran Desert trees and shrubs, as well as other larger acuña cacti that act as nurse plants by providing protection from temperature extremes and physical damage (Felger 2000, p. 208; Johnson *et al.* 1993, p. 178). The acuña cactus individuals are generally more robust in these situations, as opposed to in open, exposed locations (Felger 2000, p. 208). Therefore, based on the information above, we identify the presence of creosote bush, ironwood, palo verde, and other native protective plants to be a physical or biological feature necessary for acuña cactus survival.

Native Vegetation Dominance—The acuña cactus habitat should be relatively free from perennial grass invaders as these alter structure, function, dominance, and disturbance regimes, and have been shown to drastically lower species diversity, within the Sonoran Desert (Olsson *et al.* 2012, p. 10). Such changes have great potential to impact acuña cacti and their pollinators. In addition, such introduced grasses as buffelgrass form continuous mats and remove open bare ground for nesting bees such as *Diadasia* spp. (Buchmann 2007, p. 13). These bees move nesting sites yearly to shed parasites, therefore requiring the continued availability of sandy, well-drained, bare ground available to create nests (Buchmann 2012, pers. comm.). Therefore, based on our review of the best available information, we identify Sonoran Desert-scrub habitat dominated by native plant species to be a physical or biological feature necessary for acuña cactus survival.

Primary Constituent Elements for the Acuña Cactus

Under the Act and its implementing regulations, we are required to identify the physical or biological features essential to the conservation of acuña cactus in areas occupied at the time of listing, focusing on the features' primary constituent elements. We consider primary constituent elements to be the elements of physical or biological features that provide for a species' life-history processes and are essential to the conservation of the species.

Based on our current knowledge of the physical or biological features and habitat characteristics required to sustain the species' life-history processes, we determine that the primary constituent elements specific to the acuña cactus are:

(i) Native vegetation within the Paloverde-Cacti-Mixed Scrub Series of the Arizona Upland Subdivision of the Sonoran Desert-scrub at elevations between 365 to 1,150 m (1,198 to 3,773 ft). This vegetation must contain predominantly native plant species that:

a. Provide protection to the acuña cactus. Examples of such plants are creosote bush, ironwood, and palo verde;

b. Provide for pollinator habitat with a radius of 900 m (2,953 ft) around each individual, reproducing acuña cactus;

c. Allow for seed dispersal through the presence of bare soils immediately adjacent to and within 10 m (32.8 ft) of individual, reproducing acuña cactus.

(ii) Soils overlying rhyolite, andesite, tuff, granite, granodiorite, diorite, or Cornelia quartz monzonite bedrock that are in valley bottoms, on small knolls, or on ridgetops, and are generally on slopes of less than 30 percent.

Special Management Considerations or Protection

When designating critical habitat, we assess whether the specific areas within the geographical area occupied by the species at the time of listing contain features which are essential to the conservation of the species and which may require special management considerations or protection. The features essential to the conservation of the acuña cactus may require special management considerations or protection to reduce the following threats: livestock grazing; border activities; ORV use; mining; and nonnative, invasive plant species. Currently some of these threats are not identified to occur at a level that threatens populations with extinction; however without management of these threats, they could rise to this level. Refer to the five-factor analysis above for more information on these threats. Management activities that could ameliorate these threats include, but are not limited to, improving habitats and potentially increasing plant population numbers on lands the BLM, NPS, or the State of Arizona currently holds or may hold in the future. Special management to protect the features essential to the conservation of the species include conservation measures and actions to minimize effects of livestock grazing, road and trail building; construction of new border control facilities, towers or fences, ORV use, and mining, and to control nonnative, invasive plants on these lands. These management activities will protect the essential physical or biological features for the species by maintaining native vegetation communities, preserving soil characteristics, and providing habitat for the acuña cactus and its pollinators.

Criteria Used To Identify Critical Habitat

As required by section 4(b)(2) of the Act, we use the best scientific data available to designate critical habitat. We review available information pertaining to the habitat requirements of the species. In accordance with the Act and its implementing regulation at 50 CFR 424.12(e), we consider whether designating additional areas—outside those currently occupied as well as those occupied at the time of listing—are necessary to ensure the conservation of the species. We are proposing to designate critical habitat in areas within the geographical area occupied by the species at the time of listing, as described above in the proposed rule to list the acuña cactus, and contain sufficient elements of physical or biological features to support life-history processes essential for the conservation of the species. We also are proposing to designate specific areas outside the geographical area occupied by the species at the time of listing that we have determined to be essential to the conservation of the species.

We reviewed available information and supporting data that pertain to the

habitat requirements of the acuña cactus. This information included research published in peer-reviewed articles and presented in academic theses and agency reports, as well as data collected from long-term monitoring plots, interviews with experts, and regional climate data and GIS coverage. Sources of information include, but are not limited to, Brown 1994, Buchmann 2007, Butterwick 1982–1992, Felger 2000, Holm 2006, Johnson 1992, Johnson *et al.* 1993, McDonald 2007, Olsson *et al.* 2012, Phillips *et al.* 1982, NPS 2011a, NPS 2011b, Rutman 2007, Van Rheede van Oudtshorrn, K. and M.W. van Rooyen 1999, and WRCC 2012. Based on this information, we developed a strategy for determining which areas meet the definition of critical habitat for acuña cactus.

Occupied Area at the Time of Listing

In identifying proposed critical habitat units for acuña cactus, we proceeded through a multi-step process. We obtained all records for acuña cactus distribution from AGFD, as well as both published and unpublished documentation from our files. There is no information on the historical range of this species; survey results confirm that plant distribution is comprised of disjunct occupied habitat in two general areas of south-central Arizona.

Our approach to delineating critical habitat units was applied in the following manner:

(1) We overlaid acuña cactus locations into a GIS database. This provided us with the ability to examine slope, aspect, elevation, geologic type, vegetation community, and topographic features. These data points verified and slightly expanded the previously recorded elevation ranges for acuña cactus.

(2) In addition to the GIS layers listed above, we then included a 900-m (2,953-ft) buffer around known populations to ensure that all potential pollinators would have a sufficient land base to establish nesting sites and to provide pollinating services for acuña cactus, as described in *Physical or Biological Features* for the Acuña cactus above.

(3) We then drew critical habitat boundaries that captured the locations elucidated under (1) and (2) above. Critical habitat designations were then mapped using Albers Equal Area (Albers) North American Datum 83 (NAD 83) coordinates.

We defined six units within the current distribution of the species in two general areas of south-central Arizona. Two of the subunits are not occupied at the time of listing; the remaining units and subunits contain approximately 2,730 individuals. Within these units and subunits, several geologic, topographic, elevation, slope, and vegetation community features have been defined which, in combination, create appropriate acuña cactus habitat that is essential to the conservation of the species, though not all lands containing this combination support the acuña cacti.

Areas Essential for the Conservation of Acuña Cactus Outside of Occupied Areas

As discussed above in the five-factor analysis and ''Drought and Climate Change'' section, with reduced annual precipitation over the past 30 years, mature acuña cactus plants produce fewer flowers and seeds, and seedling establishment and survival does not offset mortality. Increased insect attack, possibly due to warmer winter temperatures throughout the region, in combination with water and heat stresses, have resulted in a documented mortality of more than 80 percent of individuals within populations that have been visited more than once.

Although the specific water needs of the species are unknown, acuña cactus seedlings require adequate precipitation for survival, and adults require precipitation for flowering and fruit set. To determine what amount of precipitation is adequate, we analyzed precipitation monitoring records from OPCNM. Through our analysis, we determined the acuña cactus flower production and recruitment peaked in 1992, when 902 flowers were produced (Holm 2006, p. 2–10) following a winter period with total precipitation of 29.7 cm (11.66 in) (WRCC 2012, entire). Flower production reached measured lows in 1999, 2002, and 2006 (NPS 2011a, p. 2), years when total winter precipitation ranged between 2.2 and 3.3 cm (0.85 and 1.3 in) (WRCC 2012, entire). Similarly, recruitment peaked in the early 1990s (Holm 2006, p. 2–6; NPS 2011a, p. 1), following a 1990 summer period with 24.6 cm (9.7 in) of precipitation (WRCC 2012, entire). Therefore, based on our review of the best available information, we identify that areas that currently receive 29.7 cm (11.66 in) or higher total yearly precipitation are necessary for the acuña cactus reproduction and survival due to the continuing and impending region-wide drought.

Following determination of critical habitat as outlined in the previous section, we then used an overlay of the areas containing appropriate geology, vegetation community, percent slope, and elevation, as defined in the physical and biological features, plus Parameter-elevation Regressions on Independent Slopes Model (PRISM) climate data, to map areas that contain the correct geology, vegetation community, elevation range, and slope range, and that receive 29.7 cm (11.66 in) or more annual precipitation over a 30-year average (see the *Physical or Biological Features* for the Acuña catus above). The result was additional polygons representing suitable habitat which are not known to be occupied at the time of listing, but that contain appropriate habitat for the species, and are more northerly, higher in elevation, and receive higher mean annual precipitation than other acuña cactus habitat. It is generally recognized that as climate change progresses, species will move both north and upslope to adapt to hotter and dryer climate (Lesica and McCune 2004, p. 687). Our reasoning in defining these two additional areas as critical habitat is that they will provide the greatest probability of higher precipitation and cooler temperatures of the available acuña cactus habitat throughout south-central Arizona, and thus provide an avenue for natural expansion of the species' range (small mammals and birds likely disperse the red fruits) and for off-site conservation efforts (transplant populations). Areas that currently support the cactus will, hopefully, continue to support the cactus in the future; however, given the ongoing drought and the predictions for reduced precipitation throughout the region, we conclude that additional areas are essential to the conservation of the species.

When determining proposed critical habitat boundaries, we made every effort to avoid including developed areas such as lands covered by buildings, pavement, and other structures because such lands lack physical or biological features for the acuña cactus. The scale of the maps we prepared under the parameters for publication within the Code of Federal Regulations may not reflect the exclusion of such developed lands. Any such lands inadvertently left inside critical habitat boundaries shown on the maps of this proposed rule have been excluded by text in the proposed rule and are not proposed for designation as critical habitat. Therefore, if the critical habitat is finalized as proposed, a Federal action involving these lands would not trigger section 7 consultation with respect to critical habitat and the requirement of no adverse modification unless the specific action would affect the physical or biological features in the adjacent critical habitat.

The critical habitat designation is defined by the map or maps, as modified by any accompanying regulatory text, presented at the end of this document in the rule portion. We include more detailed information on the boundaries of the critical habitat designation in the preamble of this document. We will make the coordinates or plot points or both on which each map is based available to the public on *http://www.regulations.gov* at Docket No. FWS–R2–ES–2012–0061, on our Internet sites *http://www.fws.gov/southwest/es/arizona/,* and at the field office responsible for the designation (see **FOR FURTHER INFORMATION CONTACT** above).

Proposed Critical Habitat Designation for Acuña Cactus

We are proposing six units as critical habitat for the acuña cactus. The critical habitat areas we describe below constitute our current best assessment of areas that meet the definition of critical habitat for the acuña cactus. The six units we propose as critical habitat are: (1) Organ Pipe Cactus National Monument, (2) Ajo, (3) the Sauceda Mountains, (4) the Sand Tank Mountains, (5) Mineral Mountain, and (6) Box O Wash. Table 5 shows the occupied units.

TABLE 5—OCCUPANCY OF THE ACUÑA CACTUS BY PROPOSED CRITICAL HABITAT UNITS

Unit	Occupied at time of listing?
1. Organ Pipe Cactus National Monument Unit:	
Dripping Spring	Yes.
Acuña Valley	Yes.
2. Ajo Unit:	
Townsites	Yes.
Little Ajo Mountains	Yes.
3. Sauceda Mountains Unit:	
Coffeepot Mountain	Yes.
Cimarron Mountain	No.
4. Sand Tank Mountains Unit:	
Javelina Mountain	Yes.
Sand Tank Mountain	No.
5. Mineral Mountain Unit	Yes.
6. Box O Wash Unit	Yes.

The approximate area of each proposed critical habitat unit is shown in Table 6.

TABLE 6—PROPOSED CRITICAL HABITAT UNITS FOR THE ACUÑA CACTUS

Unit	Subunit	Federal	State	Tribal	Private	Total
		Ha (Ac)	Ha (Ac)	Ha (Ac)	Ha (Ac)	Ha (Ac)
1. Organ Pipe Cactus National Monument.	Dripping Spring	1,591 (3,931)	0	0	0	1,591 (3,931)
	Acuña Valley	2,416 (5,971)	0	0	0	2,416 (5,971)
Unit Total		4,007 (9,902)	0	0	0	4,007 (9,902)
2. Ajo	Townsites	89 (220)	0	0	330 (815)	419 (1,035)
	Little Ajo Mountains.	106 (263)	0	0	141 (347)	247 (610)
Unit Total		195 (483)	0	0	470 (1,162)	666 (1,645)
3. Sauceda Mountains.	Coffeepot Mountain.	1,481 (3,659)	0	156 (385)	0	1,637 (4,044)
	Cimarron Mountain.	0	0	2,100 (5,190)	0	2,100 (5,190)
Unit Total		1,481 (3,659)	0	2,256 (5,575)	0	3,737 (9,234)
4. Sand Tank Mountains.	Javelina Mountain	911 (2,251)	0	0	0	911 (2,251)
	Sand Tank Mountain.	3,107 (7,677)	0	0	0	3,107 (7,677)
Unit Total		4,018 (9,928)	0	0	0	4,018 (9,928)
5. Mineral Mountain.		874 (2,160)	217 (537)	0	0	1,092 (2,697)
6. Box O Wash		1,378 (3,404)	5,556 (13,729)	0	1,287 (3,180)	8,221 (20,314)
Grand Total		11,953 (29,536)	5,773 (14,266)	2,256 (5,575)	1,757 (4,342)	21,740 (53,720)

Note: Area sizes may not sum due to rounding.

We present brief descriptions of all units, and reasons why they meet the definition of critical habitat for the acuña cactus, below.

Unit 1: Organ Pipe Cactus National Monument

Unit 1 is located within OPCNM, in southwestern Pima County, Arizona. The unit consists of two subunits totaling 4,007 ha (9,902 ac), of which all is federally owned land. The Federal land is administered by the NPS.

Unit 1a: Acuña Valley—Unit 1a consists of 2,416 ha (5,971 ac) in central OPCNM. Lands within this subunit are occupied at the time of listing with the largest known population of the acuña

cactus, approximately 2,000 individuals. This subunit contains all of the primary constituent elements of the physical or biological features essential to the conservation of the acuña cactus.

Unit 1b: Dripping Spring—Unit 1b consists of 1,591 ha (3,931ac) in southern OPCNM. An acuña cactus herbarium specimen was collected from within this unit in 1952. A general location was recorded on this specimen, and from this information, a GIS map was created by the AGFD. Because OPCNM personnel were not aware that an acuña cactus had been collected in this area, they did not revisit the area to survey for the species and are not able to survey now due to security issues along the border. We believe there is a possibility this population remains extant because: (1) We know of no other acuña cactus population that has been extirpated. This unit is in the center between the two largest known populations, which are located in the United States and Mexico. There have been no natural, environmental changes from climate change, drought, or insect predation that have caused an acuña cactus population in the two largest known populations to be extirpated. Because this unit is centered between the two largest known populations, we have no evidence to indicate that climate change, drought, or insect predation have extirpated this population. (2) Episodic recruitment events during years of higher than average precipitation may have occurred in this population since the time of its discovery. The acuña cactus may not have been reproducing offspring in periods of drought years, but there have been periods since 1952 there was enough precipitation that would have resulted in higher than average reproduction. In his 3-year study of the reproductive ecology of the acuña cactus in Unit 1a, Johnson (1992, pp. 403, 405) concluded that the positive association of rainfall and annual variation in the number of flowers produced indicates that water availability limits flower production in this species. Within monitoring plots established by Buskirk in 1977 (Buskirk 1981, p. 1), total flowers counted peaked at 902 in 1992 (Holm 2006, p. 10); corresponding precipitation during the winter of 1992–1993 was 29.7 cm (11.66 in) (WRCC 2012, entire). Even though cacti in this unit were not monitored, it is likely that recruitment events during years of higher than average precipitation may have occurred in this population. (3) This species appears to be fairly long-lived. The OPCNM has been monitoring individuals for 35 years in Unit 1a, and it is likely that individuals have a life span that is much longer. Even though this plant has not been looked for in this unit since 1952, it is likely that some individuals, or their offspring, that were alive in 1952 remain in this unit today. (4) Even though illegal border activities may have potentially caused damage to the acuña cactus and its habitat in this unit, we have no evidence to indicate that these activities have occurred at such a level the acuña cactus population in this unit has been extirpated. Therefore, for the reasons stated above, we consider this subunit occupied at the time of listing. This subunit contains all of the primary constituent elements of the physical or biological features essential to the conservation of the acuña cactus.

Grazing and mining are not permitted within OPCNM; however, off-road border-related activities do occur in OPCNM. Special management considerations or protections may be required within each subunit to address off-road border-related human disturbances, invasive plant removal, and insect predation in acuña cactus habitat.

Unit 2: Ajo

Unit 2 is located in and near the town of Ajo in southwestern Pima County, Arizona. The unit consists of two subunits totaling 666 ha (1,645 ac). This unit contains 195 ha (483 ac) of federally owned land and 470 ha (1,162 ac) of private land. The Federal land is administered by the BLM.

Subunit 2a: Townsites—Subunit 2a consists of 330 ha (815 ac) of private land and 89 ha (220 ac) of BLM land in and around the town of Ajo, Arizona. This subunit is comprised of three separate populations of the acuña cactus on private and BLM lands, which are close enough in proximity to be combined within the 900 m (2,953 ft) radius defined for pollinators. Lands within this subunit are occupied at the time of listing; the combined number of plants occurring within this subunit is 33. This subunit contains all of the primary constituent elements of the physical or biological features essential to the conservation of the acuña cactus.

Subunit 2b: Little Ajo Mountains—Subunit 2b consists of 106 ha (263 ac) of BLM lands and 141 ha (347 ac) of private lands south of the town of Ajo, Arizona. Lands within this subunit are occupied at the time of listing, containing seven individual plants. This subunit contains all of the primary constituent elements of the physical or biological features essential to the conservation of the acuña cactus.

The features essential to the conservation of the species within both subunits are threatened by mining, urban development, off-road border activities, and exotic plant invasion. Special management considerations or protections may be required within the subunits to minimize habitat fragmentation; to minimize disturbance to acuña cactus individuals, soil, and associated native vegetation; and to prevent or remove invasive, exotic plants within the acuña cactus habitat.

Unit 3: Sauceda Mountains

Unit 3 is located in the Sauceda Mountains of northwestern Pima and southwestern Maricopa Counties, Arizona. This unit consists of two subunits totaling 3,737 ha (9,234 ac). This unit contains 1,481 ha (3,659 ac) of federally owned land and 2,256 ha (5,575 ac) of Tribally owned land. The Federal land is administered by the BLM and BMGR; the Tribal land is administered by the Tohono O'odham Nation. We will coordinate with the Tribe and examine what conservation actions, management plans, and commitments and assurances for the acuña cactus occur on these lands for potential exclusion from the final designation of critical habitat under section 4(b)(2) of the Act.

Subunit 3a: Coffeepot Mountain—Subunit 3a consists of 1,637 ha (4,044 ac) in the Sauceda Mountains of northwestern Pima and southwestern Maricopa Counties, on and near Coffeepot Mountain. This subunit is comprised of four separate populations on lands administered by the BLM (1,102 ha (2,724 ac)), the BMGR (378 ha (935 ac)), and the Tohono O'odham Nation (156 ha (385 ac)), which are close enough in proximity as to be combined within the 900 m (2,953 ft) radius defined for pollinators. Lands within this subunit are occupied at the time of listing; the combined number of plants occurring within this subunit is 445. This subunit contains all of the primary constituent elements of the physical or biological features essential to the conservation of the acuña cactus.

The features essential to the conservation of the species within subunit 3a are threatened by mining, grazing, and off-road border activities. Special management considerations or protections may be required within the unit to minimize habitat fragmentation; to minimize disturbance to individual acuña cactus individuals, soil, and associated native vegetation; and to prevent or remove invasive, exotic plants within acuña cactus habitat.

Subunit 3b: Cimarron Mountain—Subunit 3b consists of 2,100 ha (5,190

ac) of potential acuña cactus habitat all on land owned by the Tohono O'odham Nation. This unit has not been surveyed for the acuña cactus, and no acuña cacti are known to occur here at the time of listing. Modeling demonstrated that this subunit contains suitable habitat for the species. In addition, the area receives higher mean annual precipitation (greater than 29.7 cm/year (3.82 in/year)), a factor found to be essential for the conservation of the species (see the Acuña Cactus *Physical or Biological Features* section above). Therefore, this subunit provides space for the growth and expansion of the species, particularly in the face of ongoing drought and climate change model predictions, and is essential for the conservation of the species.

Unit 4: Sand Tank Mountains

Unit 4 is located in the Sand Tank Mountains of southwestern Maricopa County, Arizona. This unit consists of two subunits totaling 4,018 ha (9,928 ac), all of which is federally owned land. The Federal land is administered by the BLM and BMGR.

Subunit 4a: Javelina Mountain—Subunit 4a consists of 911 ha (2,251 ac) of land within the Sonoran Desert National Monument administered by the BLM. This subunit contains three separate populations totaling 200 individuals. This subunit contains all of the primary constituent elements of the physical or biological features essential to the conservation of the acuña cactus.

Grazing and mining are not permitted within the Sonoran Desert National Monument and the BMGR; however, off-road border-related activities and trespass livestock grazing may occur in Subunit 4a. Special management considerations or protections may be required within Subunit 4a to address increased off-road border-related human disturbances; to minimize disturbance to acuña cactus individuals, the soil, and associated native vegetation; and to prevent or remove invasive, exotic plants within acuña cactus habitat.

Subunit 4b: Sand Tank Mountain—Subunit 4b consists of 3,107 ha (7,677 ac) of potential acuña cactus habitat within the Sonoran Desert National Monument (140 ha (347 ac)) and the BMGR (2,967 ha (7,331 ac)). This unit has not been surveyed for the acuña cactus, and no acuña cacti are known to occur there at the time of listing. Modeling demonstrated that this subunit contains suitable habitat for the species. The area also receives higher mean annual precipitation (greater than 29.7 cm/year (11.69 in/year)), a factor found to be necessary for the conservation of the species. Therefore, this subunit is essential for the conservation of the acuña cactus because it provides space for the growth and expansion of the species, especially in the face of ongoing drought and climate change model predictions.

Unit 5: Mineral Mountain

Unit 5 consists of 1,092 ha (2,697 ac) on Mineral Mountain of north-central Pinal County, Arizona. This unit contains 874 ha (2,160 ac) of federally owned land and 217 ha (537 ac) of State-owned land. The Federal land is administered by the BLM (873 ha (2,158 ac)) and the Bureau of Reclamation (BOR) (1 ha (2 ac)).

This unit contains five separate known populations totaling at least 30 individuals on lands administered by the BLM and the State of Arizona. This unit contains all of the primary constituent elements of the physical or biological features essential to the conservation of the acuña cactus.

Livestock grazing and ORV activity occur on this unit, and mining occurs nearby. Special management considerations or protections may be required within the unit to minimize habitat fragmentation; to minimize disturbance to acuña cactus individuals, soil, and associated native vegetation; and to prevent or remove invasive, exotic plants within acuña cactus habitat.

Unit 6: Box O Wash

Unit 6 consists of 8,221 ha (20,314 ac) near Box O Wash of north-central Pinal County, Arizona. This unit contains 1,378 ha (3,404 ac) of federally owned land, 5,556 ha (13,729 ac) of State-owned land, and 1,287 ha (3,180 ac) of privately owned land. The Federal land is administered by the BLM (1,058 ha (2,615 ac)) and BOR (320 ha (790 ac)).

This unit contains three separate populations totaling at least 11 individuals. This unit contains all of the primary constituent elements of the physical or biological features essential to the conservation of the acuña cactus.

Livestock grazing and ORV activity occur on this unit, and mining occurs nearby. Special management considerations or protections may be required within the unit to minimize habitat fragmentation; to minimize disturbance to acuña cactus individuals, soil, and associated native vegetation; and to prevent or remove invasive, exotic plants within acuña cactus habitat.

Fickeisen Plains Cactus

Physical or Biological Features

We derive the specific physical or biological features required for the Fickeisen plains cactus from studies of the species' habitat, ecology, and life history as described below. We have determined that the Fickeisen plains cactus requires the following physical and biological features:

Space for Individual and Population Growth, and for Normal Behavior and Food, Water, Air, Light, Minerals or Other Nutritional or Physiological Requirements

The Fickeisen plains cactus is a narrow endemic with a limited distribution in northern Arizona on the Colorado Plateau. Within its range, the Fickeisen plains cactus requires the appropriate soils, associated geologic formations, slope, drainage, and plant community within the landscape to provide space for individual growth and population growth and to provide food, water, air, light, minerals or other nutritional or physiological requirements. The Fickeisen plains cactus is found on soils formed from alluvium, colluvium, or Aeolian deposits derived from limestone of the Harrisburg member of the Kaibab Formation and Toroweap Formation, underlain with Coconino Sandstone, and sandstone and mudstone of the Moenkopi Formation (Billingsley *et al.* 2001, entire; AZGS 2011). Several occurrences are located on or in close proximity to active or quaternary faults.

TABLE 7—SOIL CLASS ASSOCIATED WITH THE FICKEISEN PLAINS CACTUS HABITAT

Soil class associations	Percent slope
Strych very gravelly loam	2–10 percent slope.
Mellenthin-Rock outcrop-Torriorthents complex	10–70 percent slope
Mellenthin-Tanbark complex	5–50 percent slope.
Moenkopie-Goblin complex	5–50 percent slope.
Dutchman-McCullan complex	1–10 percent slope.
Twist sandy loam	2–10 percent slope.

TABLE 7—SOIL CLASS ASSOCIATED WITH THE FICKEISEN PLAINS CACTUS HABITAT—Continued

Soil class associations	Percent slope
Mellenthin very gravelly loam	1–25 percent slope.
Saido-Brinkerhoff complex	1–5 percent slope.
Kinan gravelly loam	1–15 percent slope.
Mellenthin-Progresso complex	1–7 percent slope.
Kinan-Pennell complex	4–15 percent slope.
Pennell cobbly loam	3–10 percent slope.
Pennell gravelly sandy loam	20–45 percent slope.
Monierco clay loam	2–15 percent slope.
Monue-Seeg complex	1–6 percent slope.
Hajisho-Cataract family-Shinume complex	4–15 percent slope.
Hajisho-Seeg complex	2–15 percent slope.
Salten-Meriwhitica-Wayneco-Tassi family, complex	5–30 percent slope.
Winona gravelly loam	0–8 percent slope.
Winon stony loam	0–8 percent slope.
Winon-Boysag gravelly loam	0–8 percent slope.
Winona-Rock outcrop	15–30 percent and 30–70 percent slope.

The Fickeisen plains cactus is affiliated with several soil series across its range (Table 7). The Fickeisen plains cactus is found on nonsaline to slightly saline soils that are shallow to moderately deep; well-drained; and consisting of gravelly loam, fine sandy loam, gravelly sandy loam, clay loam, and cobbly loam (NRCS 2012), with a soil pH between 7.9 to 8.4 (NatureServe 2011; NRCS 2012). The fine textured and very loose soil texture may enable the plant to be completely buried once retracted (NNHP 1994, p. 3), thereby protecting the apex from exposure to low temperatures during the winter season. The Fickeisen plains cactus is found at elevations from 1,310 to 1,813 m (4,200 to 5,950 ft). These elevations support between 15.25 and 35.56 cm (6 to 14 in) of annual rainfall, although precipitation patterns and monthly amounts are highly variable within the range of the Fickeisen plains cactus. Plants are found growing on mesa tops or plateaus and depositional areas consisting of flat terraces and benches, along the margins of canyon rims or on the toe of well-drained hills. Individuals are found on the western, southwestern, and southern-facing exposures with slopes of 0 to 20 percent (Arizona Rare Plant Committee 2001, unpaginated; AGFD 2011a, p. 2), although most plants are observed on slopes less than 10 percent.

The Fickeisen plains cactus occurs within the Plains and Great Basin grasslands and Great Basin desert scrub vegetation communities (Benson 1982, p. 764; NatureServe 2011). Dominate native plant species that are commonly associated with these biotic communities include: *Artemisia tridentata* (sagebrush), *Atriplex canescens* (four-wing saltbush), *Atriplex confertifolia* (shadscale), *Bouteloua eriopoda* (black grama), *Bouteloua gracilis* (blue grama), *Bromus* spp. (brome), *Chrysothamnus* spp. (rabbit-bush), *Ephedra torreyana* (Mormon tea), *Eurotia lanata* (winterfat), *Gutierrezia sarothrae* (broom snakeweed), *Pleuraphis jamesii* (James's galleta), *Oryzopsis hymenoides* (Indian ricegrass), *Sphaeralcea* spp. (globe-mallow), and *Stipa* spp. (needlegrass). Other native cactus species that are commonly found include *Agave utahensis* (century plants), *Echinocactus polycephalus* spp. and *Escobaria vivipara* var. *rosea* (foxtail cactus) (Brown 1994, pp. 115–121; Turner 1994, pp. 145–155; Hughes 1996b, p. 2; Goodwin 2011a, p. 4; NatureServe 2011).

The Fickeisen plains cactus is found growing in open, sparsely vegetated areas in full sun but also in areas of dense grass cover. Seedlings and adult Fickeisen plains cacti observed growing underneath a shrub canopy or from clumps of grama grass appeared to be larger and fuller than those in open areas. Some type and amount of canopy cover may create suitable microhabitat conditions that enhance Fickeisen plains cactus' survival by providing protection from the sun and wind, and by decreasing the rate of evapotranspiration (Milne 1987, p. 34). In order for the Fickeisen plains cactus to produce flower and set seed in the spring, adequate soil moisture during the winter is necessary (Brack 2012, pers. comm.). The general soil moisture recharge period across its range is from December to March (Travis 1987, p. 3), when temperatures and soil evaporation are low. Accumulated soil moisture is usually depleted by the summer months in which the Fickeisen plains cactus will retract underground but may emerge following summer monsoon thunderstorms. Therefore, based on the information presented above, we identify limestone soils derived from the appropriate formations; gravelly, shallow, and well-drained soils; the appropriate elevation range; and adequate precipitation to be essential physical or biological features for this species.

Sites for Breeding, Reproduction, Rearing, Germination, Seed Dispersal or Pollination

The Fickeisen plains cactus does not require areas for breeding or reproduction other than the areas they occupy and any area necessary for pollinators and seed dispersal (refer to Pollination and Pollen Dispersal section in Acuña Cactus above). Reproduction sites accommodate all life-history phases of the Fickeisen plains cactus. Like other native plants within the Colorado Plateau region, adequate precipitation and low temperatures during the winter season, which reduce evaporation, favor seedling germination (Comstock and Ehleringer 1992, pp. 196–199).

The Fickeisen plains cactus is found in areas of sparse vegetation and in tall, dense grass. Seeds of the Fickeisen plains cactus would likely require certain soil conditions to germinate, such as adequate amounts of soil moisture and nutrients, and temperatures conducive to germination, but we do not have any information regarding those specific requirements. Seed production in the Fickeisen plains cactus is considered to be low (Hughes 2011, pers. comm.), and most species of *Pediocactus* have poor seed dispersal mechanisms (Benson 1982, p. 750). Seedlings are often observed near the parent plant (Goodwin 2011a, p. 9) and do better when shade is provided by a

parent or nurse rock (Nobel 1984, p. 316; Milne 1987, p. 34). The Fickeisen plains cactus relies solely on the production of seed for reproduction (Pimienta-Barrios and del Castillo 2002, p. 79). Optimal seed set occurs through visitation and pollination by native bees.

Pollinators observed visiting flowers of the Fickeisen plains cactus include hover flies (family Syrphidae), bee flies (family Bombyliidae), mining bees (family Andrenidae), and sweat bees (family Halictidae) (Milne 1987, p. 21; NNHP 1994, p. 3). However, the primary pollinators for the Fickeisen plains cactus are believed to be halictid bees from the genera *Lasioglossum, Halictus,* and *Agapostemon,* based on several studied species of *Pediocactus* (Tepedino 2012, pers. comm.). Additionally, although flies may pollinate flowers of the Fickeisen plains cactus when they eat pollen or nectar, bees are considered to be the essential pollinators for native plants and likely for the Fickeisen plains cactus. Foraging distances vary by species and body size (Greenleaf *et al.* 2007, p. 592*),* but the typical flight distances of halictid bees in the genera *Lasioglossum* are 10 to 410 m (33 to 1,345 ft). The foraging distance for the largest bodied bee in the genera *Agapostemon* is approximately 1,000 m (3,280 ft) (Tepedino 2012, pers. comm.).

For the Fickeisen plains cactus, because of its endemism, small population size, and disjunct occurrence, maintaining genetic diversity is essential for its persistence (Tepedino *et al.* 1996, p. 245). In general, maintaining adequate populations of the Fickeisen plains cactus' primary pollinators, which likely depends on the presence and diversity of other native plant species in sufficient numbers within, near, and between populations (''stepping stones''), is essential to facilitate gene flow (NatureServe 2011). Therefore, maintaining areas with a high diversity of native plant species is necessary to sustain populations of native pollinators (Peach *et al.* 1993, p. 314). Low numbers of abundant flowers offering little reward can lead to low rates of plants visited by pollinators (Wilcox and Neiland 2002, pp. 272–273). The Fickeisen plains cactus relies solely on the production of seeds for reproduction, with pollination highly linked to their survival. A lack of pollinators would gradually decrease the number of seeds in the seed bank and the conservation potential for the Fickeisen plains cactus (Wilcock and Neiland 2002, p. 276). Therefore, based on the information above, we identify a pollination area-with a radius of 1,000 m (3,280 ft) around each reproducing Fickeisen plains cactus and containing native vegetation as a physical or biological feature of Fickeisen plains cactus habitat.

Habitats That are Protected From Disturbance or Representative of the Historical, Geographical, and Ecological Distribution of the Species

The Fickeisen plains cactus has a restricted geographical distribution. Endemic species whose populations exhibit a high degree of isolation are extremely susceptible to extinction from random and non-random, catastrophic, natural or human-caused events. Therefore, the conservation of the Fickeisen plains cactus is dependent on several factors, including but not limited to: (1) Maintenance of areas of sufficient size and configuration to sustain natural ecosystem components, functions, and processes (such as sun exposure, native shrubs or grasses that provide microhabitats for seedlings, natural fire and hydrologic regimes, preservation of biological soil crusts that support the surrounding vegetation community, and adequate biotic balance to prevent excessive herbivory); (2) protection of the existing substrate continuity and structure; (3) connectivity among clusters of plants within geographic proximity to facilitate gene flow among these sites through pollination activity and seed dispersal; and (4) sufficient adjacent suitable habitat for reproduction and population expansion.

A natural, generally intact surface and subsurface that is free of inappropriate disturbance associated with land use activities (such as trampling and soil compaction from livestock grazing) and associated physical processes such as the hydrologic regime are necessary to provide water, minerals, and other physiological needs for the Fickeisen plains cactus. A natural intact surface and subsurface includes the preservation of soil qualities (texture, slope, rooting depth) to enable the seasonal ability of plants to retract below the subsurface to enter dormancy but emerge when conditions are favorable. A natural hydrologic regime includes the seasonal retention of soil moisture followed by the drying out of the substrate to promote growth of plants for the following season. These processes enable populations to develop and maintain seed banks, and to provide for success seedling survival, adult growth, and expansion of populations. The Fickeisen plains cactus must sustain and expand in number if ecological representation of this species is to be ensured. Therefore, based on the information above, we identify natural, generally intact surface and subsurface that preserves the physical processes, such as soil quality and the natural hydrology of a natural vegetation community, to be physical or biological features for this species.

Primary Constituent Elements for the Fickeisen Plains Cactus

Based on our current knowledge of the physical or biological features and habitat characteristics required to sustain the species' life-history processes, we determine that the primary constituent elements specific to the Fickeisen plains cactus are:

(i) Soils in northern Arizona on the Colorado Plateau that are:

a. Formed from alluvium, colluvium, or Aeolian deposits;

b. Derived from limestone of the Harrisburg member of the Kaibab Formation and Toroweap Formation;

c. Underlain with Coconino Sandstone, and sandstone and mudstone of the Moenkopi Formation;

d. At an elevation of 1,310 to 1,813 m (4,200 to 5,950 ft);

e. Are gravelly-loam, fine-textured, well drained, and shallow;

f. On terraces, benches, tops of mesas and plateaus, toe-slope of hills with a 0 to 20 percent slope;

g. Supportive of biological soil crusts;

h. Within the Plains and Great Basin grassland and Great Basin desert scrub vegetation communities;

(ii) Native vegetation in areas that have natural, generally intact surface and subsurface features that provide habitat and suitable nesting substrate for the cactus' pollinators and space for seed dispersal and germination; and

(iii) Provide for pollinator habitat with a radius of 1,000 m (3,280 ft) around each individual, reproducing Fickeisen plains cactus.

Special Management Considerations or Protection

When designating critical habitat, we assess whether the specific areas within the geographical area occupied by the species at the time of listing contain features which are essential to the conservation of the species and which may require special management considerations or protection. The features essential to the conservation of this species may require special management considerations or protection to reduce the following threats: (1) Livestock grazing; (2) nonnative, invasive plant species; (3) rodent and rabbit predation; and (4) long-term drought. Special management considerations or protection are required within critical habitat areas to

address these threats. Management activities that could ameliorate these threats include (but are not limited to) improving habitats and potentially increasing plant population numbers on lands the BLM, Forest Service, or the State currently holds or may hold in the future. Special management to protect the features essential to the conservation of the species include conservation measures and actions to minimize effects of livestock grazing; control nonnative, invasive plants; reduce rodent and rabbit predation, and manage activities in response to drought conditions on these lands. These management activities will protect the features essential to the conservation of the species by maintaining native vegetation communities, preserving soil characteristics, and providing habitat for the Fickeisen plains cactus and its pollinators.

Criteria Used To Identify Critical Habitat

As required by section 4(b)(2) of the Act, we use the best scientific data available to designate critical habitat. We review available information pertaining to the habitat requirements of the species. In accordance with the Act and its implementing regulation at 50 CFR 424.12(e), we consider whether designating additional areas—outside those currently occupied as well as those occupied at the time of listing—are necessary to ensure the conservation of the species. We have determined that all areas we are proposing to designate as critical habitat are within the geographical area occupied by the species at the time of listing (see the ''Abundance and Trends'' section, above, for more information).

Based on the best available information, we conclude that the nine proposed units are occupied by the Fickeisen plains cactus. We acknowledge that several of the populations have not been visited for many years, but our rationale for including them within occupied units is described below.

The Salaratus Draw (which includes Salaratus Draw I and Salaratus Draw II) and Toquer Tank sites were within the BLM's ''seldom'' monitored cluster plots and contain a few, widely spaced individuals. These cluster plots were for the purpose of tracking presence or absence and not intended to be intensively searched or to establish a population estimate. They were originally created to be visited every 5 to 10 years in which, the Toquer Tank plot was last visited in 1994 and the Salaratus Draw plots in 2001. We have very little information about the Fickeisen plains cactus in the Toquer Tank plot. A fair number of plants were documented there for several consecutive years and the site was occupied in 1994. When the Salaratus Draw plots were last visited in 2001, the sites were reported to be dry. Climate data for 2001 recorded below-average precipitation, and the region was experiencing a prolonged drought. Given that the Fickeisen plains cactus can be difficult to locate, particularly when plants are not flowering, it is likely that they were retracted below ground and missed during the count. In addition, plants may remain underground for several years in a row, as has been documented in the plots that are regularly monitored by the BLM. Even plants that have their crown exposed just above the soil surface can be difficult to locate. When conditions are ideal (adequate precipitation), plants will emerge above ground and are easier to detect. Additionally, BLM documented one instance when the Sunshine Ridge population had declined to zero plants in 2000, but three of the tagged plants were detected the following year. This provides basis for our assumption that the Salaratus Draw and Toquer Tank may still be occupied as of 2012.

Furthermore, the Fickeisen plains cactus was documented at six sites that have never been monitored and have not been visited in over 18 years. These unmonitored sites (Beanhole Well, Marble Canyon, South Canyon, Tiger Wash1, Tiger Wash 2, and Shinumo Wash) are within 6 km (4 mi) of the monitored sites in House Rock Valley where the Fickeisen plains cactus has been documented within the last 6 years. Livestock grazing has been reported in the area of the South Canyon site, but there is no evidence that the grazing resulted in the Fickeisen plains cactus being removed from the population. Similarly, there have been no large-scale, surface-disturbing activities occurring in proximity to the monitored or unmonitored areas that would lead us to believe that the Fickeisen plains cactus is no longer viable at the sites. Also, the life span of the Fickeisen plains cactus is estimated to be between 10 to 15 years (Phillips *et al.* 1982, p. 9). Because these six unmonitored sites are within close proximity to the monitored sites that contain the Fickeisen plains cactus, the environmental conditions have not been severe enough to extirpate the cactus from nearby monitored sites, impacts to the habitat from livestock grazing have not removed plants from the monitored populations, and the cactus has a lifespan of 10 to 15 years, we believe that the six unmonitored subunits are still occupied by the Fickeisen plains cactus.

To further our assumption that unsurveyed areas may still be occupied, the Fickeisen plains cactus exhibits episodic recruitment when climatic conditions are ideal. Based on BLM's monitoring information, a few small plants do emerge, perhaps not each year, but at least every 2 to 4 years. Information that describes the habitat of these sites is very limited. Livestock grazing is the primary surface-disturbing activity. Based on our evaluation of grazing for the regular monitored plots, we anticipate that the habitat has been degraded and impacted by other identified threats to the plant. We also acknowledge that these small populations are being affected by drought and climate change, and when coupled with surface disturbance, this likely results in increased mortality. But based on the best available information, there is no indication that leads us to believe that the Fickeisen plains cactus is no longer viable at the unsurveyed sites.

We considered areas outside the geographical area occupied by the Fickeisen plains cactus at the time of listing, but we are not proposing to designate any areas outside the geographical area occupied by the Fickeisen plains cactus. In our review, the Fickeisen plains cactus occurs across a broad range with different topography, large elevational gradients, and vegetation communities (Grahame and Sisk 2002, entire; USGS 2002, entire). Due to the vastness and diversity of the range, there are areas within its geographical range that provides for *in-situ* conservation if needed in the future. Therefore, we determined that a subset of occupied lands within the species' current range is adequate to ensure the conservation of the Fickeisen plains cactus.

We reviewed available information and supporting data that pertains to the habitat requirements of the Fickeisen plains cactus. This information included research published in peer-reviewed articles, soil surveys, agency reports, special land assessments, and data collected from long-term monitoring plots, interviews with experts, and regional climate data and GIS coverage. Sources of information include, but are not limited to: AGFD 2011b, AZGS 2011, Billingsley 2000, Billingsley and Dyer 2003, BLM 2007a, Calico 2012, Goodwin 2011a, Hazelton 2012a, Milne 1987, NNHP 2011a, NRCS 2012, Phillips *et al.* 1982, Travis 1987, and WRCC 2012. Based on this

information, we developed a strategy for determining which areas meet the definition of critical habitat for the Fickeisen plains cactus.

In identifying proposed critical habitat units for the Fickeisen plains cactus, we proceeded through a multi-step process. We obtained all records for the distribution of the Fickeisen plains cactus from AGFD, as well as both published and unpublished documentation from our files. Recent survey results confirm that plant distribution is similar to known distributions with the exception that additional populations have been found following survey efforts.

Our approach to delineating critical habitat units was applied in the following manner:

(1) We overlaid locations of the Fickeisen plains cactus into a GIS database. This provided us with the ability to examine slope, elevation, geologic type, vegetation community, and topographic features. These data points verified and slightly expanded the previously recorded elevation ranges for the Fickeisen plains cactus.

(2) In addition to the GIS layers listed above, we then included a 1,000 m (3,280 ft) pollination area around known populations to encompass native vegetation surrounding individual Fickeisen plains cacti, as described in *Primary Constituent Elements for the Fickeisen Plains Cactus,* above.

(3) We then drew critical habitat boundaries that captured the locations elucidated under (1) and (2) above. Critical habitat designations were then mapped using Albers Equal Area (Albers) North American Datum 83 (NAD 83) coordinates.

Occupied Area at the Time of Listing

Areas where plants are or have been documented within the species' described range were considered to be occupied at the time of listing. The known range of the Fickeisen plains cactus is from Mainstreet Valley and Hurricane Valley in Mohave County to House Rock Valley in Coconino County on the Arizona Strip; along the canyon rims of the Colorado River and Little Colorado River, to the area of Gray Mountain; and along the rims of Cataract Canyon on the Coconino Plateau.

Occupied occurrences of the Fickeisen plains cactus located in close proximity were grouped into one unit (e.g., Hurricane Cliffs). Areas where plants are distributed over a large distance (e.g., Cataract Ranch) were also categorized into one unit. All of the units contained all of the identified elements of physical or biological features and supported multiple life-history processes.

The critical habitat designation is defined by the map or maps, as modified by any accompanying regulatory text, presented at the end of this document in the rule portion. We include more detailed information on the boundaries of the critical habitat designation in the preamble of this document. We will make the coordinates or plot points or both on which each map is based available to the public on *http://www.regulations.gov* at Docket No. FWS–R2–ES–2012–0061, on our Internet sites *http://www.fws.gov/southwest/es/arizona/,* and at the field office responsible for the designation (see **FOR FURTHER INFORMATION CONTACT** above).

Proposed Critical Habitat Designation for the Fickeisen Plains Cactus

We are proposing nine units as critical habitat for the Fickeisen plains cactus. The critical habitat areas we describe below constitute our current best assessment of areas that meet the definition of critical habitat for the Fickeisen plains cactus. The nine areas we propose as critical habitat are: (1) Hurricane Cliffs; (2) Sunshine Ridge; (3) Clayhole Valley; (4) Snake Gulch; (5) House Rock Valley; (6) Tiger Wash; (7) Little Colorado River Overlook; (8) Gray Mountain; and (9) Cataract Canyon. All of the nine critical habitat units are occupied by the Fickeisen plains cactus.

The approximate area of each proposed critical habitat unit is shown in Table 8.

TABLE 8—PROPOSED CRITICAL HABITAT UNITS FOR THE FICKEISEN PLAINS CACTUS

Unit	Subunit	Federal	State	Tribal	Private	Total
		Ha (Ac)	Ha (Ac)	Ha (Ac)	Ha (Ac)	Ha (Ac)
1. Hurricane Cliffs	Dutchman Draw	1,525 (3,769)	0	0	2 (5)	1,527 (3,774)
	Salaratus Draw	445 (1,098)	266 (658)	0	13 (33)	724 (1,789)
	Temple Trail	443 (1,096)	0	0	0	443 (1,096)
	Toquer Tank	350 (865)	0	0	0	350 (865)
Unit Total	.....	2,763 (6,828)	266 (658)	0	15 (38)	3,044 (7,524)
2. Sunshine Ridge	Sunshine Ridge	612 (1,512)	142 (351)	0	0	754 (1,863)
3. Clayhole Valley	Clayhole Ridge	338 (836)	76 (188)	0	0	414 (1,024)
4. Snake Gulch	Snake Gulch	945 (2,335)	0	0	0	945 (2,335)
5. House Rock Valley	Beanhole Well	745 (1,841)	126 (312)	0	0	871 (2,153)
	North Canyon Wash	472 (1,166)	0	0	0	472 (1,166)
	Marble Canyon	214 (528)	0	0	0	214 (528)
	South Canyon	336 (831)	0	0	0	336 (831)
Unit Total	.....	1,767 (4,366)	126 (312)	0	0	1,893 (4,678)
6. Tiger Wash	Tiger Wash 1	0	0	380 (940)	0	380 (940)
	Tiger Wash 2	0	0	1,497 (3,700)	0	1,497 (3,700)
	Shinumo Wash	0	0	380 (940)	0	380 (940)
Unit Total	.....	0	0	2,257 (5,580)	0	2,257 (5,580)

TABLE 8—PROPOSED CRITICAL HABITAT UNITS FOR THE FICKEISEN PLAINS CACTUS—Continued

Unit	Subunit	Federal	State	Tribal	Private	Total
		Ha (Ac)	Ha (Ac)	Ha (Ac)	Ha (Ac)	Ha (Ac)
7. Little Colorado River (LCR) Overlook	LCR Overlook	0	0	1,170 (2,891)	0	1,170 (2,891)
8. Gray Mountain	Mays Wash	246 (609)	80 (198)	0 0	371 (917)	697 (1,724)
	Gray Mountain	0	7 (17)	438 (1,083)	514 (1,271)	960 (2,371)
Unit Total		246 (609)	87 (215)	438 (1,083)	885 (2,188)	1,656 (4,095)
9. Cataract Canyon	Cataract Canyon	0	4,920 (12,159)	0 0	2,848 (7,037)	7,768 (19,196)
Grand Total		6,671 (16,486)	5,617 (13,883)	3,865 (9,554)	3,748 (9,263)	19,901 (49,186)

Note: Area sizes may not sum due to rounding.

We present below brief descriptions of all units, and reasons why they meet the definition of critical habitat for the Fickeisen plains cactus.

Unit 1: Hurricane Cliffs

The Hurricane Cliffs Unit is located within the Hurricane Cliffs geographic area that is bounded to the west by Mainstreet Valley and to the east by Hurricane Cliffs. The unit consists of four subunits totaling 3,044 ha (7,524 ac) on the Arizona Strip in Mohave County. The unit includes private land, lands owned by the State of Arizona, and federally owned land managed by the BLM. This subunit contains all of the primary constituent elements of the physical or biological features essential to the conservation of the Fickeisen plains cactus. Occupancy of the Hurricane Cliffs Unit by the Fickeisen plains cactus has been documented since 1986 (BLM 1986, p. 1). The species was considered generally rare but in abundant numbers at Dutchman Draw with scattered individuals located in small clusters adjacent to the Dutchman Draw populations. These smaller clusters include the Navajo, Ward, Salaratus Draw I and Salaratus Draw II, Temple Trail, and Toquer Tank populations.

Subunit 1a: Dutchman Draw—Subunit 1a consists of 1,527 ha (3,774 ac) in Mainstreet Valley next to Dutchman Draw. Lands within this subunit are occupied at the time of listing. This site has been monitored regularly since 1986, and contains 12 plants as of 2011. This subunit also includes the Navajo and Ward cluster plots. These small plots were last visited in 2001 and 10 plants were found at both of the sites. This subunit contains all of the primary constituent elements of the physical or biological features essential to the conservation of the Fickeisen plains cactus.

Subunit 1b: Salaratus Draw—Subunit 1b consists of 724 ha (1,789 ac) in Mainstreet Valley. Lands within this subunit are occupied at the time of listing. This site was visited only three times between 1986 and 2001. This subunit includes Salaratus Draw I and Salaratus Draw II populations. At most, 44 plants were located in these areas in 19994. This subunit contains all of the primary constituent elements of the physical or biological features essential to the conservation of the Fickeisen plains cactus.

Subunit 1c: Temple Trail—Subunit 1c consists of 443 ha (1,096 ac) in Lower Hurricane Valley. Lands within this subunit are occupied at the time of listing. This site was last visited in 2001 when seven individuals were found. This subunit contains all of the primary constituent elements of the physical or biological features essential to the conservation of the Fickeisen plains cactus.

Subunit 1d: Toquer Tank—Subunit 1d consists of 350 ha (865 ac) in Mainstreet Valley. Lands within this subunit are occupied at the time of listing. This site was regularly monitored from 1986 to 1991, when abundance counts ranged from 7 to 13 plants. This site was last visited in 1994 and seven individuals were found. This subunit contains all of the primary constituent elements of the physical or biological features essential to the conservation of the Fickeisen plains cactus.

In all subunits of Unit 1, the features essential to the conservation of the species may require special management considerations to address threats from livestock grazing; nonnative, invasive species; rodent or rabbit predation, and long-term drought.

Unit 2: Sunshine Ridge Unit

The unit includes lands owned by the State and federally owned land that is managed by the BLM. Plants are located east of the Uinkaret Plateau and east of the range of the *Pediocactus sileri* (Siler pincushion cactus). Occupancy of the Sunshine Ridge Unit by the Fickeisen plains cactus has been documented since 1977 (AGFD 2011b, entire). This population has been regularly monitored since 1986, and has 34 plants as of 2011. Land within this unit is occupied at the time of listing and contains all of the primary constituent elements of the physical or biological features essential to the conservation of the Fickeisen plains cactus.

The features essential to the conservation of the species may require special management considerations to address threats from livestock grazing; nonnative, invasive species; rodent or rabbit predation, and long-term drought.

Unit 3: Clayhole Valley

Unit 3 is located in Upper Clayhole Valley on the Uinkaret Plateau. The unit consists of the Clayhole Ridge subunit totaling 414 ha (1,024 ac) on the Arizona Strip in Mohave County. The unit includes land owned by the State and federally owned land that is managed by the BLM. Occupancy of the Clayhole Valley Unit by the Fickeisen plains cactus has been documented since 1980 (AGFD 2011b, entire). The population has been monitored annually since 1986. As of 2011, the population contains 42 plants. Land within this unit is occupied at the time of listing and contains all of the primary constituent elements of the physical or biological features essential to the conservation of the Fickeisen plains cactus.

The features essential to the conservation of the species may require

special management considerations to address threats from livestock grazing; nonnative, invasive species; rodent or rabbit predation, and long-term drought.

Unit 4: Snake Gulch Unit

Unit 4 is located on the western boundary of the Kaibab National Forest in Coconino County. The unit consists of 945 ha (2,335 ac) on the North Kaibab Ranger District. The entire unit consists of federally owned land that is managed by the U.S. Forest Service. Occupancy was confirmed in 2004, by the Kaibab National Forest. The number of plants occurring here has not been documented except in general terms of presence/absence. This unit is occupied at the time of listing and contains all of the primary constituent elements of the physical or biological features essential to the conservation of the Fickeisen plains cactus.

The features essential to the conservation of the species may require special management considerations to address threats from nonnative, invasive species and long-term drought. Livestock grazing is permitted in this subunit during the winter, but is not considered a threat to the features essential to the conservation of the Fickeisen plains cactus.

Unit 5: House Rock Valley

Unit 5 is located on the eastern edge of the Arizona Strip in Coconino County and near the North Rim of the Grand Canyon National Park. The unit consists of four subunits totaling 1,893 ha (4,678 ac). The unit consists of land owned by the State and federally owned land that is managed by the BLM. Lands within this unit are occupied at the time of listing and contain all of the primary constituent elements of the physical or biological features essential to the conservation of the Fickeisen plains cactus.

Occupancy of the Fickeisen plains cactus in the House Rock Valley Unit was first documented in 1979 (Phillips 1979, entire; AGFD 2011b, entire), at Beanhole Well, Marble Canyon, and South Canyon. These sites have not been visited for many years. However, we have no reason to believe these sites are not occupied at the time of listing for the before-mentioned reasons. Occupancy at the North Canyon Wash site was documented in 1986, and it has been regularly monitored. The House Rock Valley Unit is bounded by the Colorado River that runs northwest to southwest, U.S. Highway 89A to the north, and the Kaibab National Forest to the west.

Subunit 5a: Beanhole Well—Subunit 5a consists of 745 ha (1,841 ac) of federally owned land that is managed by the BLM, and 126 ha (312 ac) of State-owned land. Lands within this subunit are occupied at the time of listing. Three plants were documented at Beanhole Well in 1979, and the site has been visited since then, but we do not have information available regarding numbers of plants. This subunit contains all of the primary constituent elements of the physical or biological features essential to the conservation of the Fickeisen plains cactus.

Subunit 5b: North Canyon Wash—Subunit 1b consists of 472 ha (1,166 ac) of federally owned land that is managed by the BLM. Lands within this subunit are occupied at the time of listing. This site has been regularly monitored since 1986. As of 2011, the site contains 39 Fickeisen plains cactus. This subunit contains all of the primary constituent elements of the physical or biological features essential to the conservation of the Fickeisen plains cactus.

Subunit 5c: Marble Canyon—Subunit 5c consists of 214 ha (528 ac) of federally owned land that is managed by the BLM. Lands within this subunit are occupied at the time of listing. Eight plants were documented at Marble Canyon in 1979. This site has not been visited for many years. This subunit contains all of the primary constituent elements of the physical or biological features essential to the conservation of the Fickeisen plains cactus.

Subunit 5d: South Canyon—Subunit 5d consists of 336 ha (831 ac) of Federal Land in House Rock Valley along the rim of Marble Canyon. Lands within this subunit are occupied at the time of listing. A total of 52 plants have been documented at this site historically. This subunit contains all of the primary constituent elements of the physical or biological features essential to the conservation of the Fickeisen plains cactus.

In all subunits of Unit 5, the features essential to the conservation of the species may require special management considerations to address threats from livestock grazing; nonnative, invasive species; rodent and rabbit predation, and long-term drought.

Unit 6: Tiger Wash

Unit 6 is located near the rim of Marble Canyon on the Navajo Nation. The unit consists of three subunits totaling 2,257 ha (5,580 ac) in Coconino County. The entire unit is managed by the Navajo Nation. Occupancy of the Tiger Wash Unit by the Fickeisen plains cactus was first documented in 1991 (NNHP 2011a, p. 3). At that time, it contained 41 plants that were observed to be in good-to-excellent condition and reproductive (NNHP 1994, p. 6). We will coordinate with the Tribe and examine what conservation actions, management plans, and commitments and assurances for the Fickeisen plains cactus occur on these lands for potential exclusion from the final designation of critical habitat under section 4(b)(2) of the Act.

Subunit 6a: Tiger Wash 1—Subunit 6a consists of 380 ha (940 ac) on the Navajo Nation near the Marble Canyon. Lands within this subunit are occupied at the time of listing. This site was visited in 2005, and two plants were found. This subunit contains all of the primary constituent elements of the physical or biological features essential to the conservation of the Fickeisen plains cactus.

Subunit 6b: Tiger Wash 2—Subunit 6b consists of 1,497 ha (3,700 ac) on the Navajo Nation near the Marble Canyon. Lands in this subunit are considered occupied at the time of listing. This site was visited in 1993, when 11 plants were found among 3 areas within this site. This subunit contains all of the primary constituent elements of the physical or biological features essential to the conservation of the Fickeisen plains cactus.

Subunit 6c: Shinumo Wash—Subunit 6c consists of 380 ha (940 ac) on the Navajo Nation near the Marble Canyon. This subunit is considered occupied at the time of listing. This site was visited in 1993, and seven plants were found. This subunit contains all of the primary constituent elements of the physical or biological features essential to the conservation of the Fickeisen plains cactus.

In all subunits of Unit 6, the features essential to the conservation of the species may require special management considerations to address threats from livestock grazing, nonnative, invasive species, and long-term drought.

Unit 7: Little Colorado River Overlook

Unit 7 is located on the rim of the Little Colorado River on the Navajo Nation in Coconino County. The unit consists of 1,170 ha (2,891 ac). The entire unit is managed by the Navajo Nation. Lands in this subunit are considered occupied at the time of listing. Occupancy of the Little Colorado River Overlook Unit by the Fickeisen plains cactus has been documented since 1956 (AGFD 2011b, entire; NNHP 2011a, p. 3). This unit was visited between 1997 and 2005, and a total of 36 plants have been documented among three areas. This unit contains all of the primary constituent elements of the physical or biological features essential

to the conservation of the Fickeisen plains cactus. We will coordinate with the Tribe and examine what conservation actions, management plans, and commitments and assurances for the Fickeisen plains cactus occur on these lands for potential exclusion from the final designation of critical habitat under section 4(b)(2) of the Act.

The features essential to the conservation of the species may require special management considerations to address threats from livestock grazing, nonnative, invasive species, and long-term drought.

Unit 8: Gray Mountain

Unit 8 is located in the vicinity of Gray Mountain in Coconino County. The unit consists of two subunits totaling 1,656 ha (4,095 ac). The unit includes private land, lands owned by the State, tribal lands, and federally owned land managed by the BLM. Lands within this unit are considered occupied at the time of listing. Occupancy at the Gray Mountain unit was first documented in 1962, and consists of two very small populations on both sides Highway 89 near the town of Gray Mountain. This unit contains all of the primary constituent elements of the physical or biological features essential to the conservation of the Fickeisen plains cactus. Portions of the Gray Mountain subunit occur on the Navajo Nation. We will coordinate with the Tribe and examine what conservation actions, management plans, and commitments and assurances for the Fickeisen plains cactus occur on these lands for potential exclusion from the final designation of critical habitat under section 4(b)(2) of the Act.

Subunit 8a: Mays Wash—Subunit 8a consists of 697 ha (1,724 ac) near the near the town of Gray Mountain. The unit includes private land, land owned by the State, and federally owned land managed by the BLM. Lands in this subunit are considered occupied at the time of listing. Occupancy at this site was documented in 1981 and 1984, when 31 plants were found (AGFD 2011b, entire). This subunit contains all of the primary constituent elements of the physical or biological features essential to the conservation of the Fickeisen plains cactus.

Subunit 8b: Gray Mountain—Subunit 8b consists of 960 ha (2,371 ac) on near the near the town of Gray Mountain. This unit includes private land, tribal land, and land owned by the State. Lands in this subunit are considered occupied at the time of listing. Occupancy was last documented in 2009 and three individuals were found (NNHP 2011a, p. 2). This subunit contains all of the primary constituent elements of the physical or biological features essential to the conservation of the Fickeisen plains cactus.

In all subunits of Unit 8, the features essential to the conservation of the species may require special management considerations to address threats from livestock grazing, nonnative, invasive species, and long-term drought.

Unit 9: Cataract Canyon

Unit 9 is located along the Cataract Canyon drainage, a tributary of the Colorado River, on the Coconino Plateau. The unit consists of the Cataract Canyon population totaling 7,768 ha (19,196 ac) and includes private land and land owned by State. The private parcels are within a conservation easement and are referred to as the Cataract Natural Reserve Land (TNC 2000, p. 22). Lands in this unit are considered occupied at the time of listing. Occupancy of the Cataract Canyon Unit by the Fickeisen plains cactus was documented between 2006 and 2011 (Goodwin 2006, pp. 5–7; Goodwin 2008, pp. 8–10; Goodwin 2011a, pp. 18–20). There are 146 plants on private lands, and 161 plants on State land. The unit contains all of the primary constituent elements of the physical or biological features essential to the conservation of the Fickeisen plains cactus.

The features essential to the conservation of the species may require special management considerations to address threats from nonnative, invasive species.

Effects of Critical Habitat Designation for Acuña Cactus and Fickeisen Plains Cactus

Section 7 Consultation

Section 7(a)(2) of the Act requires Federal agencies, including the Service, to ensure that any action they fund, authorize, or carry out is not likely to jeopardize the continued existence of any endangered species or threatened species or result in the destruction or adverse modification of designated critical habitat of such species. In addition, section 7(a)(4) of the Act requires Federal agencies to confer with the Service on any agency action which is likely to jeopardize the continued existence of any species proposed to be listed under the Act or result in the destruction or adverse modification of proposed critical habitat.

Decisions by the 5th and 9th Circuit Courts of Appeals have invalidated our regulatory definition of ''destruction or adverse modification'' (50 CFR 402.02) (see *Gifford Pinchot Task Force* v. *U.S. Fish and Wildlife Service,* 378 F.3d 1059 (9th Cir. 2004) and *Sierra Club* v. *U.S. Fish and Wildlife Service et al.,* 245 F.3d 434, 442 (5th Cir. 2001)), and we do not rely on this regulatory definition when analyzing whether an action is likely to destroy or adversely modify critical habitat. Under the statutory provisions of the Act, we determine destruction or adverse modification on the basis of whether, with implementation of the proposed Federal action, the affected critical habitat would continue to serve its intended conservation role for the species.

If a Federal action may affect a listed species or its critical habitat, the responsible Federal agency (action agency) must enter into consultation with us. Examples of actions that are subject to the section 7 consultation process are actions on State, Tribal, local, or private lands that require a Federal permit (such as a permit from the U.S. Army Corps of Engineers under section 404 of the Clean Water Act (33 U.S.C. 1251 *et seq.*) or a permit from the Service under section 10 of the Act) or that involve some other Federal action (such as funding from the Federal Highway Administration, Federal Aviation Administration, or the Federal Emergency Management Agency). Federal actions not affecting listed species or critical habitat, and actions on State, Tribal, local, or private lands that are not federally funded or authorized, do not require section 7 consultation.

As a result of section 7 consultation, we document compliance with the requirements of section 7(a)(2) through our issuance of:

(1) A concurrence letter for Federal actions that may affect, but are not likely to adversely affect, listed species or critical habitat; or

(2) A biological opinion for Federal actions that may affect, or are likely to adversely affect, listed species or critical habitat.

When we issue a biological opinion concluding that a project is likely to jeopardize the continued existence of a listed species and/or destroy or adversely modify critical habitat, we provide reasonable and prudent alternatives to the project, if any are identifiable, that would avoid the likelihood of jeopardy and/or destruction or adverse modification of critical habitat. We define ''reasonable and prudent alternatives'' (at 50 CFR 402.02) as alternative actions identified during consultation that:

(1) Can be implemented in a manner consistent with the intended purpose of the action,

(2) Can be implemented consistent with the scope of the Federal agency's legal authority and jurisdiction,

(3) Are economically and technologically feasible, and

(4) Would, in the Director's opinion, avoid the likelihood of jeopardizing the continued existence of the listed species and/or avoid the likelihood of destroying or adversely modifying critical habitat.

Reasonable and prudent alternatives can vary from slight project modifications to extensive redesign or relocation of the project. Costs associated with implementing a reasonable and prudent alternative are similarly variable.

Regulations at 50 CFR 402.16 require Federal agencies to reinitiate consultation on previously reviewed actions in instances where we have listed a new species or subsequently designated critical habitat that may be affected and the Federal agency has retained discretionary involvement or control over the action (or the agency's discretionary involvement or control is authorized by law). Consequently, Federal agencies sometimes may need to request reinitiation of consultation with us on actions for which formal consultation has been completed, if those actions with discretionary involvement or control may affect subsequently listed species or designated critical habitat.

Application of the ''Adverse Modification'' Standard

The key factor related to the adverse modification determination is whether, with implementation of the proposed Federal action, the affected critical habitat would continue to serve its intended conservation role for the species. Activities that may destroy or adversely modify critical habitat are those that alter the physical or biological features to an extent that appreciably reduces the conservation value of critical habitat for the acuña cactus or for the Fickeisen plains cactus. As discussed above, the role of critical habitat is to support life-history needs of the species and provide for the conservation of the species.

Section 4(b)(8) of the Act requires us to briefly evaluate and describe, in any proposed or final regulation that designates critical habitat, activities involving a Federal action that may destroy or adversely modify such habitat, or that may be affected by such designation.

Activities that may affect critical habitat, when carried out, funded, or authorized by a Federal agency, should result in consultation for the acuña cactus or the Fickeisen plains cactus. These activities include, but are not limited to, actions that would adversely affect the composition and structure of soil within the designated critical habitat for acuña cactus or the Fickeisen plains cactus through land disturbances that result in soil compaction or erosion, removal or degradation of native vegetation, or fragmentation of the acuña cactus or the Fickeisen plains cactus populations or their pollinators. Such activities within the designated critical habitat for acuña cactus or the Fickeisen plains cactus could include, but are not limited to, road and trail building; construction of new border control facilities, towers or fences; mining; ORV activity; cattle or burro grazing; and permitting actions that would result in any of the above effects. These activities could result in the loss of individuals or populations through reduction in productivity, the depletion of seedbanks, or the destruction or degradation of habitat for these cacti or their pollinators.

Exemptions

Application of Section 4(a)(3) of the Act

The Sikes Act Improvement Act of 1997 (Sikes Act) (16 U.S.C. 670a) required each military installation that includes land and water suitable for the conservation and management of natural resources to complete an integrated natural resources management plan (INRMP) by November 17, 2001. An INRMP integrates implementation of the military mission of the installation with stewardship of the natural resources found on the base. Each INRMP includes:

(1) An assessment of the ecological needs on the installation, including the need to provide for the conservation of listed species;

(2) A statement of goals and priorities;

(3) A detailed description of management actions to be implemented to provide for these ecological needs; and

(4) A monitoring and adaptive management plan.

Among other things, each INRMP must, to the extent appropriate and applicable, provide for fish and wildlife management; fish and wildlife habitat enhancement or modification; wetland protection, enhancement, and restoration where necessary to support fish and wildlife; and enforcement of applicable natural resource laws.

The National Defense Authorization Act for Fiscal Year 2004 (Pub. L. 108–136) amended the Act to limit areas eligible for designation as critical habitat. Specifically, section 4(a)(3)(B)(i) of the Act (16 U.S.C. 1533(a)(3)(B)(i)) now provides: ''The Secretary shall not designate as critical habitat any lands or other geographic areas owned or controlled by the Department of Defense, or designated for its use, that are subject to an integrated natural resources management plan prepared under section 101 of the Sikes Act (16 U.S.C. 670a), if the Secretary determines in writing that such plan provides a benefit to the species for which critical habitat is proposed for designation.''

Within the proposed critical habitat designation area, there are no Department of Defense lands with a completed INRMP that includes the acuña cactus. The BMGR has a completed INRMP that addresses other endangered and threatened species, but it does not include management actions specific to the acuña cactus or its habitat. Therefore the BMGR lands are not exempt from the potential designation of critical habitat for acuña cactus at this time. No Department of Defense lands are being proposed for designated critical habitat for the Fickeisen plains cactus.

Exclusions

Application of Section 4(b)(2) of the Act

Section 4(b)(2) of the Act states that the Secretary shall designate and make revisions to critical habitat on the basis of the best available scientific data after taking into consideration the economic impact, national security impact, and any other relevant impact of specifying any particular area as critical habitat. The Secretary may exclude an area from critical habitat if he determines that the benefits of such exclusion outweigh the benefits of specifying such area as part of the critical habitat, unless he determines, based on the best scientific data available, that the failure to designate such area as critical habitat will result in the extinction of the species. In making that determination, the statute on its face, as well as the legislative history, are clear that the Secretary has broad discretion regarding which factor(s) to use and how much weight to give to any factor.

Under section 4(b)(2) of the Act, we may exclude an area from designated critical habitat based on economic impacts, impacts on national security, or any other relevant impacts. In considering whether to exclude a particular area from the designation, we identify the benefits of including the area in the designation, identify the benefits of excluding the area from the designation, and evaluate whether the benefits of exclusion outweigh the

benefits of inclusion. If the analysis indicates that the benefits of exclusion outweigh the benefits of inclusion, the Secretary may exercise his discretion to exclude the area only if such exclusion would not result in the extinction of the species.

Exclusions Based on Economic Impacts

Under section 4(b)(2) of the Act, we consider the economic impacts of specifying any particular area as critical habitat. In order to consider economic impacts, we are preparing an analysis of the economic impacts of the proposed critical habitat designation and related factors.

We will announce the availability of the draft economic analysis as soon as it is completed. At that time, copies of the draft economic analysis will be available for downloading from the Internet at *http://www.regulations.gov,* or by contacting the Arizona Ecological Services Field Office directly (see **FOR FURTHER INFORMATION CONTACT**). During the development of a final designation, we will consider economic impacts based on information in our economic analysis, public comments, and other new information, and areas may be excluded from the final critical habitat designation under section 4(b)(2) of the Act and our implementing regulations at 50 CFR 424.19.

Exclusions Based on National Security Impacts

Under section 4(b)(2) of the Act, we consider whether there are lands where a national security impact might exist. Department of Defense lands that are included in this proposed rule include the BMGR, as discussed above in *Application of Section 4(a)(3) of the Act*. Additionally, there are specific areas included in this proposed rule that are not owned or managed by the Department of Defense, but on which the CBP operates along the U.S.-Mexico border. CBP is tasked with maintaining national security interests along the nation's international borders. In order to achieve and maintain effective control of the United States border, CBP, through its component, the USBP, requires continuing and regular access to certain portions of the area proposed for designation as critical habitat. Because CBP's border security mission has an important link to national security, CBP may identify impacts to national security that may result from designating critical habitat. We do not have information currently indicating that lands within the proposed designation of critical habitat for the acuña cactus will have an impact on national security. However, we may consider excluding certain lands in the final rule if we receive specific, reasonable justification for that basis of a national security concern that would result from the incremental regulatory burden of critical habitat during the comment period.

We have also determined that lands within the proposed designation of critical habitat for the Fickeisen plains cactus are not owned or managed by the Department of Defense, and, therefore, we anticipate no impact on national security. Consequently, the Secretary does not propose to exert his discretion to exclude any areas from the final designation based on impacts on national security. However, should BMGR or another entity identify potential impacts to national security that may result from incremental regulatory burden of critical habitat on lands owned and managed by the BMGR, or on the lands within the critical habitat footprint for the acuña cactus we may consider excluding those lands in the final critical habitat designation under section 4(b)(2) of the Act and our implementing regulations at 50 CFR 424.19.

Exclusions Based on Other Relevant Impacts

Under section 4(b)(2) of the Act, we consider any other relevant impacts, in addition to economic impacts and impacts on national security. We consider a number of factors, including whether the landowners have developed any HCPs or other management plans for the area, or whether there are conservation partnerships that would be encouraged by designation of, or exclusion from, critical habitat. In addition, we look at any Tribal issues, and consider the government-to-government relationship of the United States with Tribal entities. We also consider any social impacts that might occur because of the designation.

The Secretary is not considering exerting his discretion to exclude any particular areas from final critical habitat for either of these species at this time under section 4(b)(2) of the Act based on partnerships, management, or protection afforded by cooperative management efforts. In this proposed rule, we are seeking input from the public as to whether or not the Secretary should exclude specific areas covered under a conservation plan, agreements based on conservation partnerships, or other such areas under management that benefit the acuña cactus and the Fickeisen plains cactus from the final revised critical habitat designation. In addition, there are Tribal lands included in the proposed designation of critical habitat for the acuña cactus and the Fickeisen plains cactus. Using the criteria found in the *Criteria Used To Identify Critical Habitat* section for both species, we have determined that tribal lands that are occupied by the acuña cactus and the Fickeisen plains cactus contain the features essential for the conservation of both species, as well as tribal lands unoccupied by the acuña cactus are essential for the conservation of the species. We will seek government-to-government consultation with these tribes throughout the public comment period and during development of the final designations of critical habitat for the acuña cactus and Fickeisen plains cactus. We will consider these areas for exclusion from the final critical habitat designation to the extent consistent with the requirements of 4(b)(2) of the Act. The Navajo Nation and the Tohono O'odham Nation are the main tribes affected by this proposed rule. (Please see the Information Requested section of this proposed revised rule for instructions on how to submit comments).

Peer Review

In accordance with our joint policy on peer review published in the **Federal Register** on July 1, 1994 (59 FR 34270), we will seek the expert opinions of at least three appropriate and independent specialists regarding this proposed rule. The purpose of peer review is to ensure that our listing determination and critical habitat designation are based on scientifically sound data, assumptions, and analyses. We have invited these peer reviewers to comment during the public comment period on our proposed listing designations of critical habitat for these two species.

We will consider all comments and information we receive during the comment period on this proposed rule during our preparation of a final determination. Accordingly, the final decision may differ from this proposal.

Public Hearings

Section 4(b)(5) of the Act provides for one or more public hearings on this proposal, if requested. Requests must be received within 45 days after the date of publication of this proposed rule in the **Federal Register**. Such requests must be sent to the address shown in the **FOR FURTHER INFORMATION CONTACT** section. We will schedule public hearings on this proposal, if any are requested, and announce the dates, times, and places of those hearings, as well as how to obtain reasonable accommodations, in the **Federal Register** and local newspapers at least 15 days before the hearing.

Required Determinations

Regulatory Planning and Review—Executive Orders 12866 and 13563

Executive Order 12866 provides that the Office of Information and Regulatory Affairs (OIRA) will review all significant rules. The Office of Information and Regulatory Affairs has determined that this rule is not significant.

Executive Order 13563 reaffirms the principles of E.O. 12866 while calling for improvements in the nation's regulatory system to promote predictability, to reduce uncertainty, and to use the best, most innovative, and least burdensome tools for achieving regulatory ends. The executive order directs agencies to consider regulatory approaches that reduce burdens and maintain flexibility and freedom of choice for the public where these approaches are relevant, feasible, and consistent with regulatory objectives. E.O. 13563 emphasizes further that regulations must be based on the best available science and that the rulemaking process must allow for public participation and an open exchange of ideas. We have developed this rule in a manner consistent with these requirements.

Regulatory Flexibility Act (5 U.S.C. 601 et seq.)

Under the Regulatory Flexibility Act (RFA; 5 U.S.C. 601 *et seq.*) as amended by the Small Business Regulatory Enforcement Fairness Act (SBREFA) of 1996 (5 U.S.C 801 *et seq.*), whenever an agency must publish a notice of rulemaking for any proposed or final rule, it must prepare and make available for public comment a regulatory flexibility analysis that describes the effects of the rule on small entities (small businesses, small organizations, and small government jurisdictions). However, no regulatory flexibility analysis is required if the head of the agency certifies the rule will not have a significant economic impact on a substantial number of small entities. The SBREFA amended the RFA to require Federal agencies to provide a certification statement of the factual basis for certifying that the rule will not have a significant economic impact on a substantial number of small entities.

At this time, we lack the available economic information necessary to provide an adequate factual basis for the required RFA finding. Therefore, we defer the RFA finding until completion of the draft economic analysis prepared under section 4(b)(2) of the Act and Executive Order 12866. This draft economic analysis will provide the required factual basis for the RFA finding. Upon completion of the draft economic analysis, we will announce availability of the draft economic analysis of the proposed designation in the **Federal Register** and reopen the public comment period for the proposed designation. We will include with this announcement, as appropriate, an initial regulatory flexibility analysis or a certification that the rule will not have a significant economic impact on a substantial number of small entities accompanied by the factual basis for that determination. The proposed critical habitat areas include Federal, State, military, Tribal, and private lands, some of which are used for mining and recreation (such as hiking, camping, horseback riding, and hunting). We have concluded that deferring the RFA finding until completion of the draft economic analysis is necessary to meet the purposes and requirements of the RFA. Deferring the RFA finding in this manner will ensure that we make a sufficiently informed determination based on adequate economic information and provide the necessary opportunity for public comment.

Energy Supply, Distribution, or Use—Executive Order 13211

Executive Order 13211 (Actions Concerning Regulations That Significantly Affect Energy Supply, Distribution, or Use) requires agencies to prepare Statements of Energy Effects when undertaking certain actions. Because there are no energy facilities within the footprint of the proposed critical habitat boundaries, and we are unaware of energy projects currently proposed within the boundaries, we do not expect the designation of this proposed critical habitat to significantly affect energy supplies, distribution, or use. Therefore, this action is not a significant energy action, and no Statement of Energy Effects is required. However, we will further evaluate this issue as we conduct our economic analysis, and review and revise this assessment as warranted.

Unfunded Mandates Reform Act (2 U.S.C. 1501 et seq.)

In accordance with the Unfunded Mandates Reform Act (2 U.S.C. 1501 *et seq.*), we make the following findings:

(1) This rule would not produce a Federal mandate. In general, a Federal mandate is a provision in legislation, statute, or regulation that would impose an enforceable duty upon State, local, or Tribal governments, or the private sector, and includes both ''Federal intergovernmental mandates'' and ''Federal private sector mandates.'' These terms are defined in 2 U.S.C. 658(5)–(7). ''Federal intergovernmental mandate'' includes a regulation that ''would impose an enforceable duty upon State, local, or tribal governments'' with two exceptions. It excludes ''a condition of Federal assistance.'' It also excludes ''a duty arising from participation in a voluntary Federal program,'' unless the regulation ''relates to a then-existing Federal program under which $500,000,000 or more is provided annually to State, local, and Tribal governments under entitlement authority,'' if the provision would ''increase the stringency of conditions of assistance'' or ''place caps upon, or otherwise decrease, the Federal Government's responsibility to provide funding,'' and the State, local, or Tribal governments ''lack authority'' to adjust accordingly. At the time of enactment, these entitlement programs were: Medicaid; Aid to Families with Dependent Children work programs; Child Nutrition; Food Stamps; Social Services Block Grants; Vocational Rehabilitation State Grants; Foster Care, Adoption Assistance, and Independent Living; Family Support Welfare Services; and Child Support Enforcement. ''Federal private sector mandate'' includes a regulation that ''would impose an enforceable duty upon the private sector, except (i) a condition of Federal assistance or (ii) a duty arising from participation in a voluntary Federal program.''

The designation of critical habitat does not impose a legally binding duty on non-Federal Government entities or private parties. Under the Act, the only regulatory effect is that Federal agencies must ensure that their actions do not destroy or adversely modify critical habitat under section 7. While non-Federal entities that receive Federal funding, assistance, or permits, or that otherwise require approval or authorization from a Federal agency for an action, may be indirectly impacted by the designation of critical habitat, the legally binding duty to avoid destruction or adverse modification of critical habitat rests squarely on the Federal agency. Furthermore, to the extent that non-Federal entities are indirectly impacted because they receive Federal assistance or participate in a voluntary Federal aid program, the Unfunded Mandates Reform Act would not apply, nor would critical habitat shift the costs of the large entitlement programs listed above onto State governments.

(2) We do not believe that this rule would significantly or uniquely affect small governments. The lands being proposed for critical habitat designation are predominantly owned by the Bureau

of Land Management, the Bureau of Reclamation, the U.S. Military, the U.S. Forest Service, the National Park Service, the State of Arizona, and the Tohono O'odham and Navajo Nations. None of these government entities fit the definition of ''small governmental jurisdiction.'' Therefore, a Small Government Agency Plan is not required. However, we will further evaluate this issue as we conduct our economic analysis, and review and revise this assessment if appropriate.

Takings—Executive Order 12630

In accordance with Executive Order 12630 (Government Actions and Interference with Constitutionally Protected Private Property Rights), we have analyzed the potential takings implications of designating critical habitat for the acuña cactus and the Fickeisen plains cactus in a takings implications assessment. Critical habitat designation does not affect landowner actions that do not require Federal funding or permits, nor does it preclude development of habitat conservation programs or issuance of incidental take permits to permit actions that do require Federal funding or permits to go forward. The takings implications assessment concludes that this designation of critical habitat for the acuña cactus and the Fickeisen plains cactus does not pose significant takings implications for lands within or affected by the designation. However, we have not yet completed the economic analysis for this proposed rule. Once the economic analysis is available, we will review and revise this preliminary assessment as warranted, and prepare a takings implication assessment.

Federalism—Executive Order 13132

In accordance with Executive Order 13132 (Federalism), this proposed rule does not have significant Federalism effects. A Federalism summary impact statement is not required. In keeping with Department of the Interior and Department of Commerce policy, we requested information from, and coordinated development of, this proposed critical habitat designation with appropriate State resource agencies in Arizona. The designation of critical habitat in areas currently occupied by the acuña cactus or the Fickeisen plains cactus may impose nominal additional regulatory restrictions to those currently in place and, therefore, may have little incremental impact on State and local governments and their activities. The designation may have some benefit to these governments because the areas that contain the physical or biological features essential to the conservation of the species are more clearly defined, and the elements of the features of the habitat necessary to the conservation of the species are specifically identified. This information does not alter where and what federally sponsored activities may occur. However, it may assist local governments in long-range planning (rather than having them wait for case-by-case section 7 consultations to occur).

Where State and local governments require approval or authorization from a Federal agency for actions that may affect critical habitat, consultation under section 7(a)(2) would be required. While non-Federal entities that receive Federal funding, assistance, or permits, or that otherwise require approval or authorization from a Federal agency for an action, may be indirectly impacted by the designation of critical habitat, the legally binding duty to avoid destruction or adverse modification of critical habitat rests squarely on the Federal agency.

Civil Justice Reform—Executive Order 12988

In accordance with Executive Order 12988 (Civil Justice Reform), the Office of the Solicitor has determined that the rule does not unduly burden the judicial system and that it meets the requirements of sections 3(a) and 3(b)(2) of the Order. We have proposed designating critical habitat in accordance with the provisions of the Act. This proposed rule uses standard property descriptions and identifies the elements of physical or biological features essential to the conservation of the acuña cactus and the Fickeisen plains cactus within the designated areas to assist the public in understanding the habitat needs of the species.

Paperwork Reduction Act of 1995 (44 U.S.C. 3501 et seq.)

This rule does not contain any new collections of information that require approval by OMB under the Paperwork Reduction Act of 1995 (44 U.S.C. 3501 *et seq.*). This rule will not impose recordkeeping or reporting requirements on State or local governments, individuals, businesses, or organizations. An agency may not conduct or sponsor, and a person is not required to respond to, a collection of information unless it displays a currently valid OMB control number.

National Environmental Policy Act (42 U.S.C. 4321 et seq.)

We have determined that environmental assessments and environmental impact statements, as defined under the authority of NEPA (42 U.S.C. 4321 *et seq.*), need not be prepared in connection with listing a species as an endangered or a threatened species under the Act. We published a notice outlining our reasons for this determination in the **Federal Register** on October 25, 1983 (48 FR 49244).

It is our position that, outside the jurisdiction of the U.S. Court of Appeals for the Tenth Circuit, we do not need to prepare environmental analyses pursuant to NEPA in connection with designating critical habitat under the Act. We published a notice outlining our reasons for this determination in the **Federal Register** on October 25, 1983 (48 FR 49244). This position was upheld by the U.S. Court of Appeals for the Ninth Circuit (*Douglas County* v. *Babbitt,* 48 F.3d 1495 (9th Cir. 1995), cert. denied 516 U.S. 1042 (1996)).

Clarity of the Rule

We are required by Executive Orders 12866 and 12988 and by the Presidential Memorandum of June 1, 1998, to write all rules in plain language. This means that each rule we publish must:

(1) Be logically organized;

(2) Use the active voice to address readers directly;

(3) Use clear language rather than jargon;

(4) Be divided into short sections and sentences; and

(5) Use lists and tables wherever possible.

If you feel that we have not met these requirements, send us comments by one of the methods listed in the **ADDRESSES** section. To better help us revise the rule, your comments should be as specific as possible. For example, you should tell us the numbers of the sections or paragraphs that are unclearly written, which sections or sentences are too long, the sections where you feel lists or tables would be useful, etc.

Government-to-Government Relationship With Tribes

In accordance with the President's memorandum of April 29, 1994 (Government-to-Government Relations with Native American Tribal Governments; 59 FR 22951), Executive Order 13175 (Consultation and Coordination With Indian Tribal Governments), and the Department of the Interior's manual at 512 DM 2, we readily acknowledge our responsibility to communicate meaningfully with recognized Federal Tribes on a government-to-government basis. In accordance with Secretarial Order 3206 of June 5, 1997 (American Indian Tribal

Rights, Federal-Tribal Trust Responsibilities, and the Endangered Species Act), we readily acknowledge our responsibilities to work directly with tribes in developing programs for healthy ecosystems, to acknowledge that Tribal lands are not subject to the same controls as Federal public lands, to remain sensitive to Indian culture, and to make information available to tribes.

There are Tribal lands included in the proposed designation of critical habitat for the acuña cactus and the Fickeisen plains cactus. Using the criteria found in the *Criteria Used To Identify Critical Habitat* section for both species, we have determined that tribal lands that are occupied by the acuña cactus and the Fickeisen plains cactus contain the features essential for the conservation of both species, as well as tribal lands unoccupied by the acuña cactus are essential for the conservation of the species. We will seek government-to-government consultation with these tribes throughout the public comment period and during development of the final designations of critical habitat for the acuña cactus and Fickeisen plains cactus. We will consider these areas for exclusion from the final critical habitat designation to the extent consistent with the requirements of 4(b)(2) of the Act. The Navajo Nation and the Tohono O'odham Nation are the main tribes affected by this proposed rule. We recently sent a notification letter to the Navajo Nation and the Tohono O'odham Nation describing the exclusion process under section 4(b)(2) of the Act, and we have engaged in conversations with the Tribes about the proposal to the extent possible without disclosing pre-decisional information. In addition, we have engaged in informal conservations with representatives of the Navajo Nation and the Tohono O'odham Nation during the listing process and so the tribes has been made aware that the Service is working on critical habitat proposals for the two species. We will schedule a meeting with the Navajo Nation and Tohono O'odham Nation and any other interested tribes shortly after publication of this proposed rule so that we can give them as much time as possible to comment. We will also send letters to all other tribes with interest in the general geographical areas of the acuña cactus and Fickeisen plains cactus range, including the following: Ak Chin Indian Community; Chemehuevi Indian Tribe; Cocopah Tribe; Colorado River Indian Tribes; Havasupai Tribe; Hopi Tribe; Kaibab Band of Paiute Indians; Pascua Yaqui Tribe; Salt River Pima-Maricopa Indian Community; San Carlos Apache Tribe; White Mountain Apache Tribe; Yavapai-Apache Nation; Yavapai-Prescott Tribe; and Pueblo of Zuni Tribe.

References Cited

A complete list of references cited in this proposed rulemaking is available on the Internet at *http://www.regulations.gov* and upon request from the Arizona Ecological Services Field Office (see **FOR FURTHER INFORMATION CONTACT**).

Authors

The primary authors of this package are the staff members of the Arizona Ecological Services Field Office.

List of Subjects in 50 CFR Part 17

Endangered and threatened species, Exports, Imports, Reporting and recordkeeping requirements, Transportation.

Proposed Regulation Promulgation

Accordingly, we propose to amend part 17, subchapter B of chapter I, title 50 of the Code of Federal Regulations, as set forth below:

PART 17—[AMENDED]

1. The authority citation for part 17 continues to read as follows:

Authority: 16 U.S.C. 1361–1407; 16 U.S.C. 1531–1544; 16 U.S.C. 4201–4245; Pub. L. 99–625, 100 Stat. 3500; unless otherwise noted.

2. Amend § 17.12(h) by adding entries for ''*Echinomastus erectocentrus* var. *acunensis*'' and ''*Pediocactus peeblesianus* var. *fickeiseniae*'' in alphabetical order under FLOWERING PLANTS, to the List of Endangered and Threatened Plants, as follows:.

§ 17.12 Endangered and threatened plants.

* * * * *

(h) * * *

Species		Historic range	Family	Status	When listed	Critical habitat	Special rules
Scientific name	Common name						
FLOWERING PLANTS							
*	*	*	*	*	*		*
Echinomastus erectocentrus var. *acunensis*.	Acuña cactus	U.S.A. (AZ), Mexico	Cactaceae	E		17.96(a)	NA
*	*	*	*	*	*		*
Pediocactus peeblesianus var. *fickeiseniae*.	Fickeisen plains cactus.	U.S.A. (AZ)	Cactaceae	E		17.96(a)	NA
*	*	*	*	*	*		*

3. Amend § 17.96 by adding entries for ''*Echinomastus erectocentrus* var. *acunensis* (acuña cactus) and ''*Pediocactus peeblesianus* var. *fickeiseniae* (Fickeisen plains cactus),'' in alphabetical order under the family Cactaceae, to read as follows.

§ 17.96 Critical habitat—plants.

(a) *Flowering plants.*

* * * * *

Family Cactaceae: *Echinomastus erectocentrus* var. *acunensis* (acuña cactus)

(1) Critical habitat units are depicted for Maricopa, Pima, and Pinal Counties, Arizona, on the maps below.

(2) Within these areas, the primary constituent elements of the physical or biological features essential to the conservation of the acuña cactus consist of:

(i) Native vegetation within the Paloverde-Cacti-Mixed Scrub Series of the Arizona Upland Subdivision of the Sonoran Desert-scrub at elevations between 365 to 1,150 m (1,198 to 3,773 ft). This vegetation must contain predominantly native plant species that:

a. Provide protection to the acuña cactus. Examples of such plants are creosote bush, ironwood, and palo verde;

b. Provide for pollinator habitat with a radius of 900 m (2,953 ft) around each individual, reproducing acuña cactus;

c. Allow for seed dispersal through the presence of bare soils immediately adjacent to and within 10 m (32.8 ft) of individual, reproducing acuña cactus.

(ii) Soils overlying rhyolite, andesite, tuff, granite, granodiorite, diorite, or Cornelia quartz monzonite bedrock that are in valley bottoms, on small knolls, or on ridgetops, and are generally on slopes of less than 30 percent.

(3) Critical habitat does not include manmade structures (such as buildings, aqueducts, runways, roads, and other paved areas) and the land on which they are located existing within the legal boundaries on the effective date of this rule.

(4) *Critical habitat map units.* Digital data layers defining map units were created using geology, topography, elevation, vegetation community, mean annual precipitation from the 1971 to 2000 period of record, and acuña cactus herbarium and site visit records from 1952 to the present; these were mapped using Universal Transverse Mercator (UTM) coordinates. The maps in this entry, as modified by any accompanying regulatory text, establish the boundaries of the critical habitat designation. The coordinates or plot points or both on which each map is based are available to the public at the Service's internet site, (*http://www.fws.gov/southwest/es/arizona/*), (*http://www.regulations.gov* at Docket No. FWS–RX–ES–2012–0061 and at the field office responsible for this designation. You may obtain field office location information by contacting one of the Service regional offices, the addresses of which are listed at 50 CFR 2.2.

(5) Index map follows:

BILLING CODE 4310–55–P

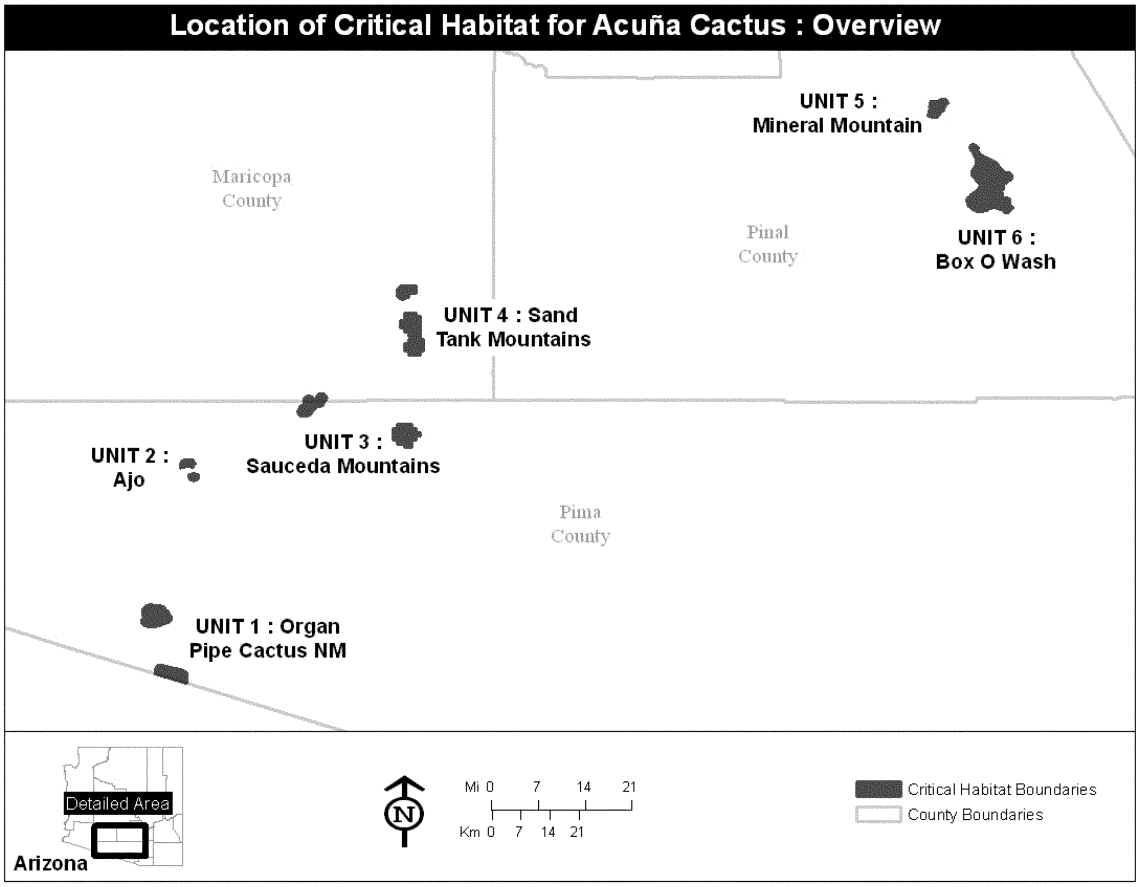

(6) Unit 1: Organ Pipe Cactus National Monument, Pima County, AZ. Map of Unit 1 follows:

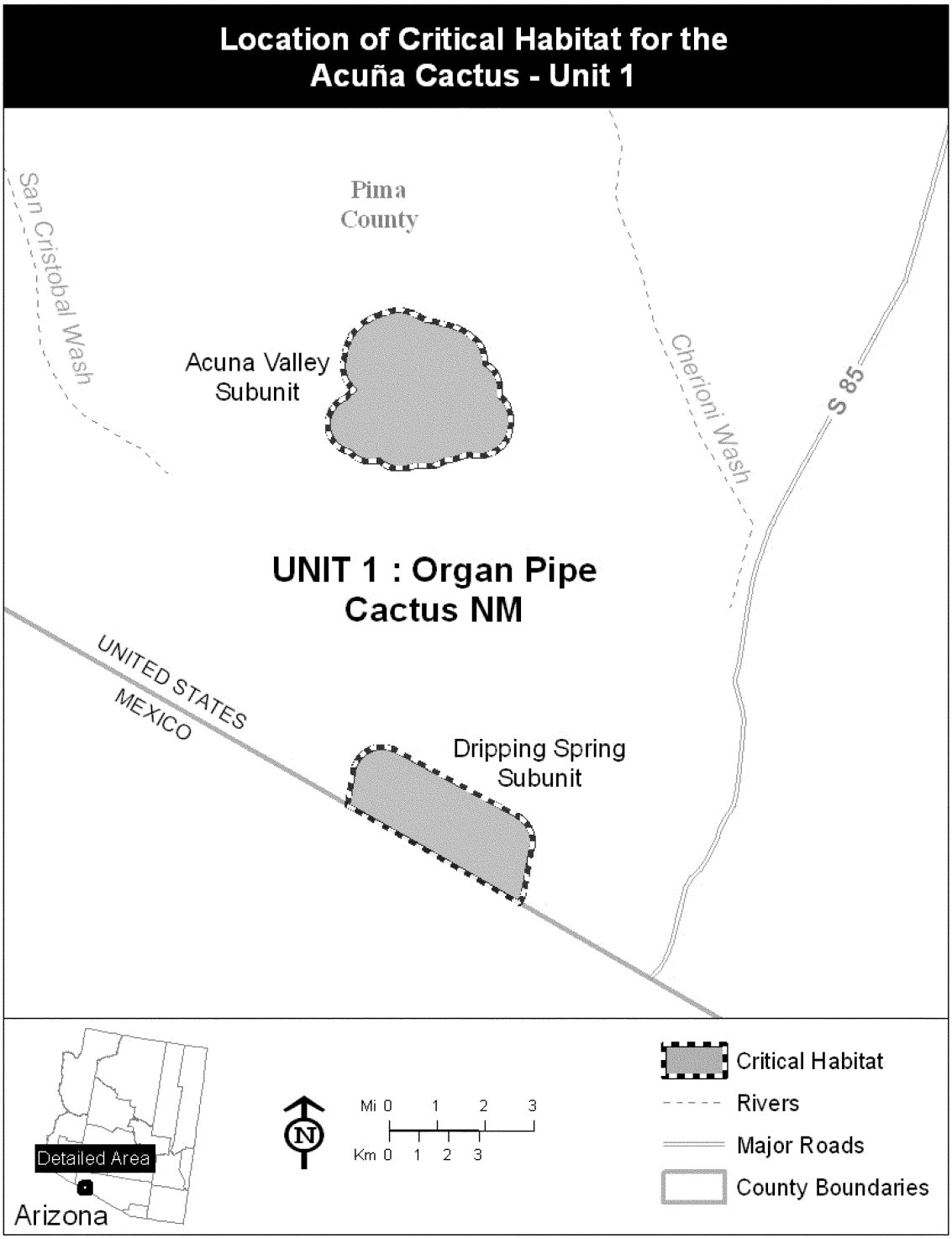

(7) Unit 2: Ajo Unit, Pima County, AZ.
Map of Unit 2 follows:

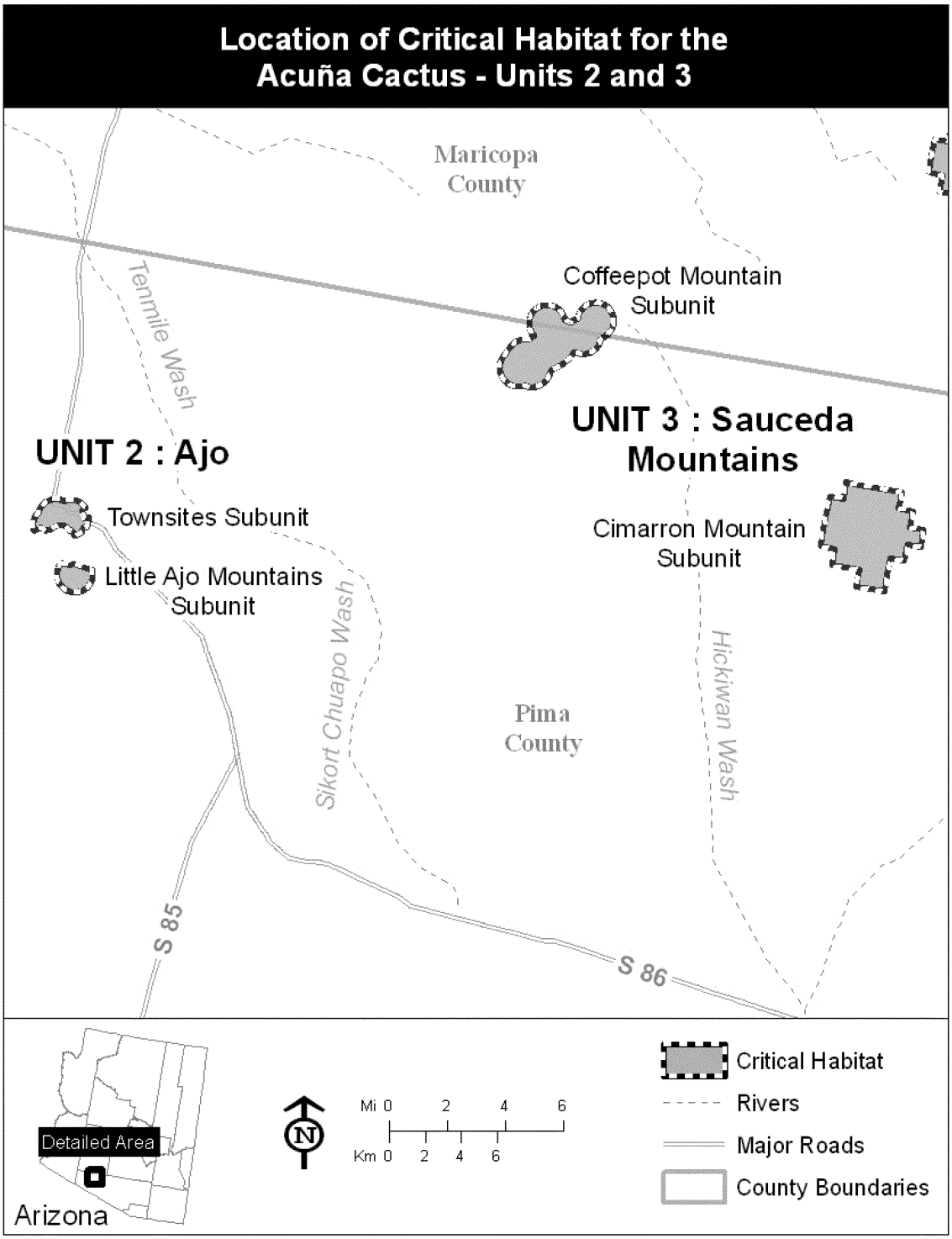

(8) Unit 3: Sauceda Mountains Unit, Maricopa and Pima Counties, AZ. Map of Unit 3 is provided at paragraph (7) of this entry.

(9) Unit 4: Sand Tank Mountains Unit, Maricopa County, AZ. Map of Unit 4 follows:

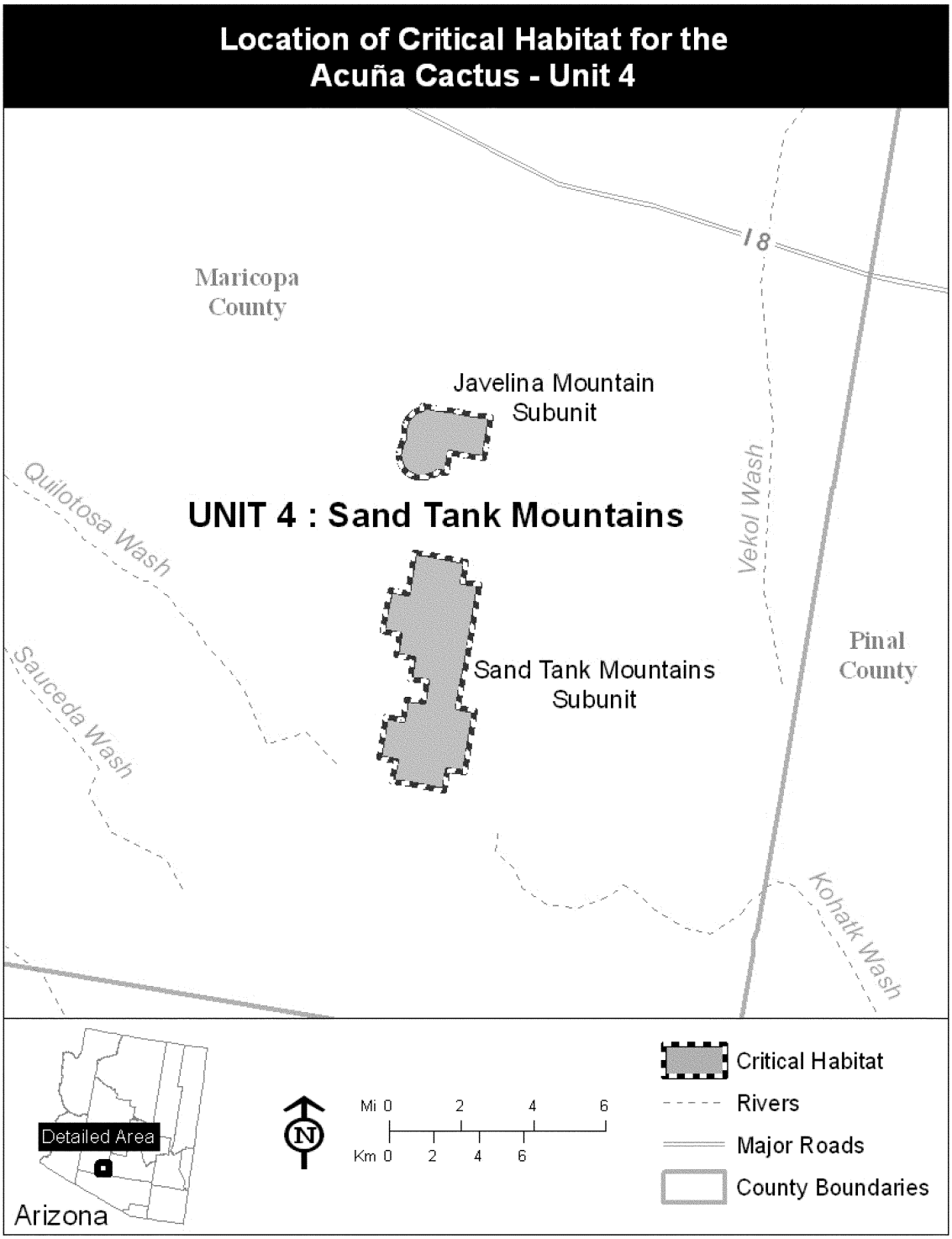

(10) Unit 5: Mineral Mountain Unit and Unit, Pinal County, AZ. Map of Units 5 and 6 follows:

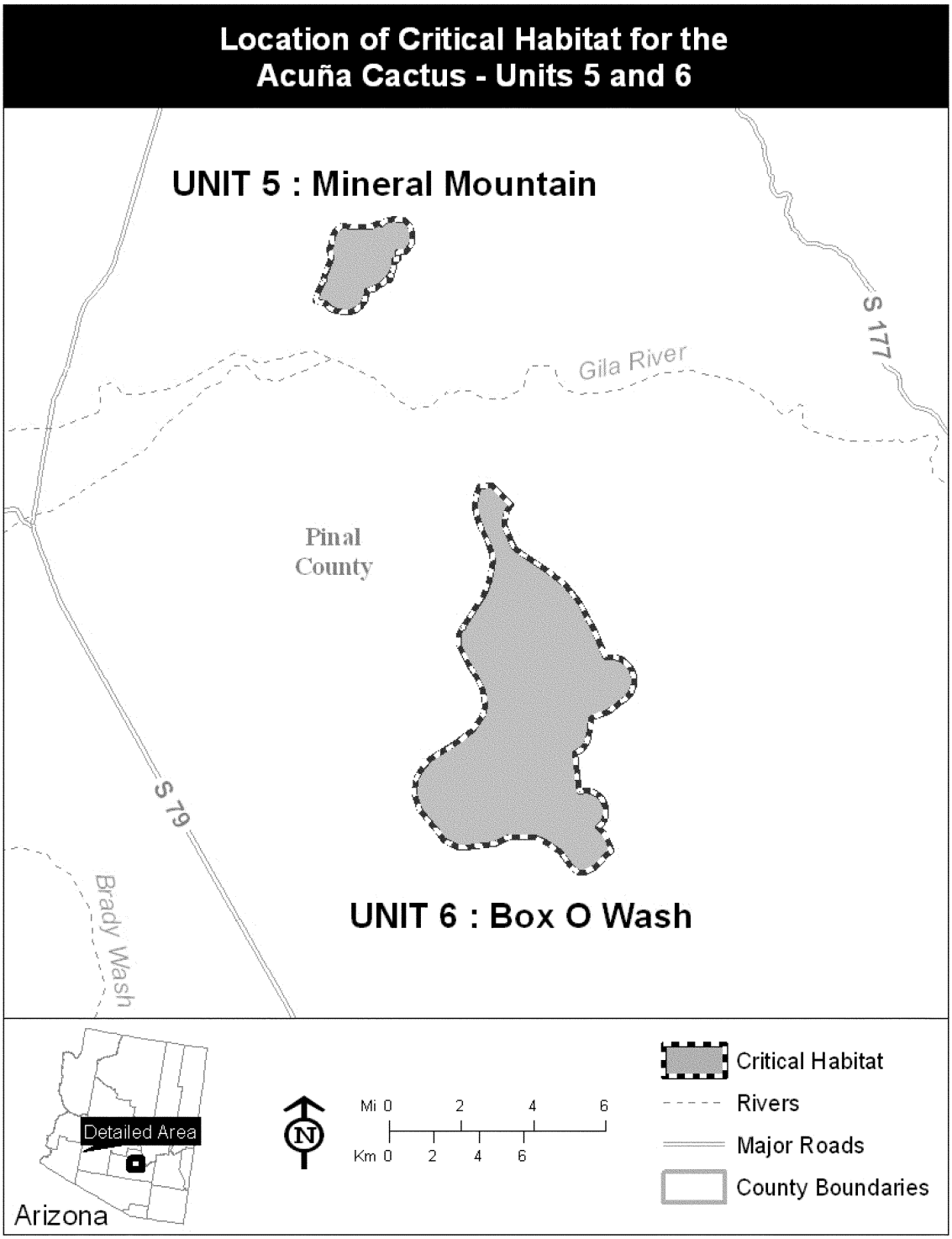

BILLING CODE 4310–55–P

(11) Unit 6: Box O Wash Unit, Pinal County, AZ. Map of Unit 6 is provided at paragraph (10) of this entry.

Family Cactaceae: *Pediocactus peeblesianus* var. *fickeiseniae* (Fickeisen plains cactus)

(1) Critical habitat units are depicted for Mohave and Coconino Counties, Arizona, on the maps below.

(2) Within these areas, the primary constituent elements of the physical or biological features essential to the conservation of the Fickeisen plains cactus consist of:

(i) Soils in northern Arizona on the Colorado Plateau that are:

a. Formed from alluvium, colluvium, or Aeolian deposits;

b. Derived from limestone of the Harrisburg member of the Kaibab Formation and Toroweap Formation;

c. Underlain with Coconino Sandstone, and sandstone and mudstone of the Moenkopi Formation;

d. At an elevation of 1,310 to 1,813 m (4,200 to 5,950 ft);

e. Are gravelly-loam, fine-textured, well drained, and shallow;

f. On terraces, benches, tops of mesas and plateaus, toe-slope of hills with a 0 to 20 percent slope;

g. Supportive of biological soil crusts;

h. Within the Plains and Great Basin grassland and Great Basin desert scrub vegetation communities;

(ii) Native vegetation in areas that have natural, generally intact surface and subsurface features that provide habitat and suitable nesting substrate for the cactus' pollinators and space for seed dispersal and germination; and

(iii) Provide for pollinator habitat with a radius of 1,000 m (3,280 ft) around each individual, reproducing Fickeisen plains cactus.

(3) Critical habitat does not include manmade structures (such as buildings, aqueducts, runways, roads, and other paved areas) and the land on which they are located existing within the legal boundaries on the effective date of this rule.

(4) *Critical habitat map units.* Data layers defining map units were created using a base of U.S. Geological Survey 7.5' quadrangle maps. Critical habitat units were then mapped using Universal Transverse Mercator (UTM) zone 11, North American Datum (NAD) 1983 coordinates.

(5) **Note:** Index map follows:

BILLING CODE 4310–55–P

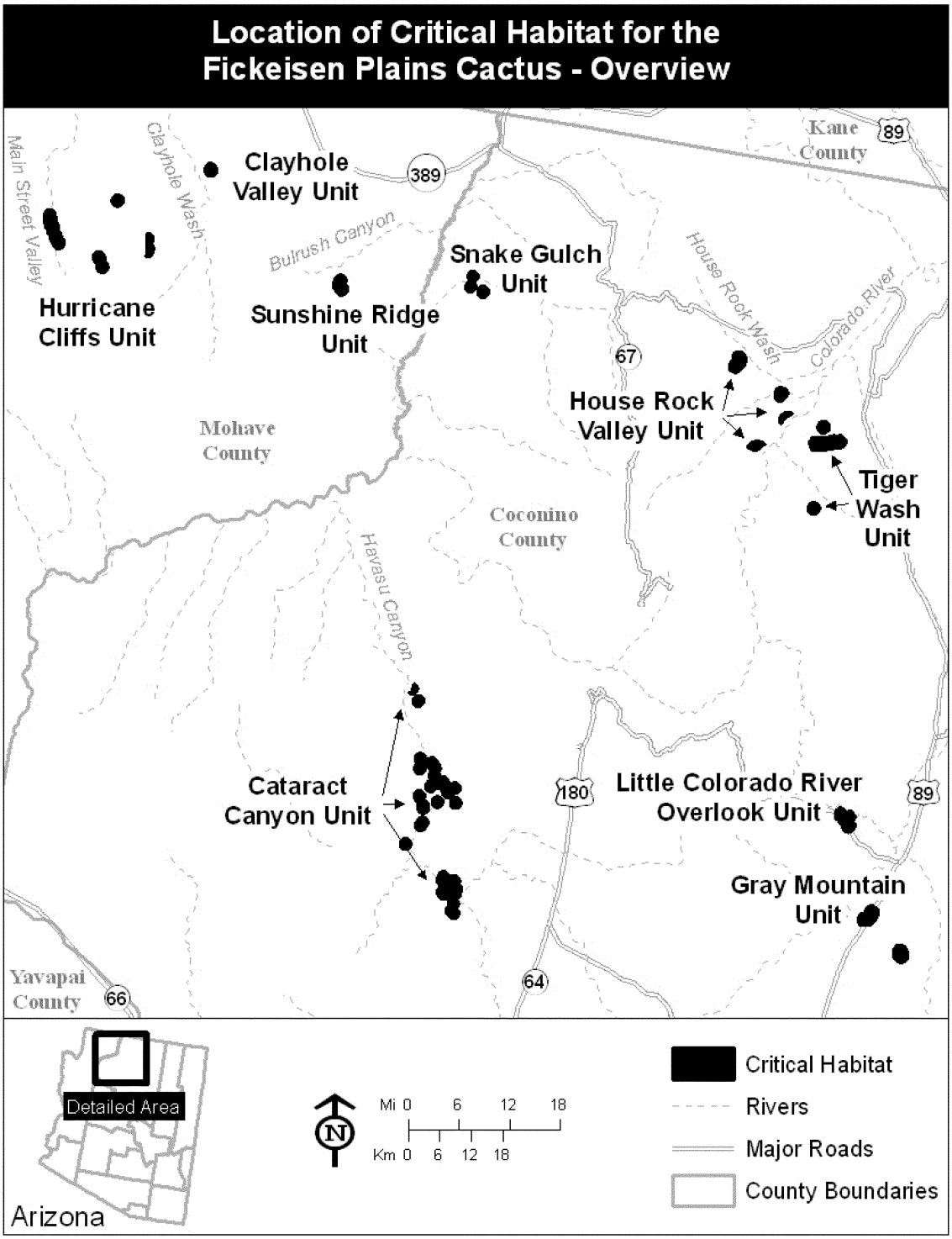

(6) Unit 1: Hurricane Cliffs Unit, Mohave County, AZ. Map of Unit 1 follows:

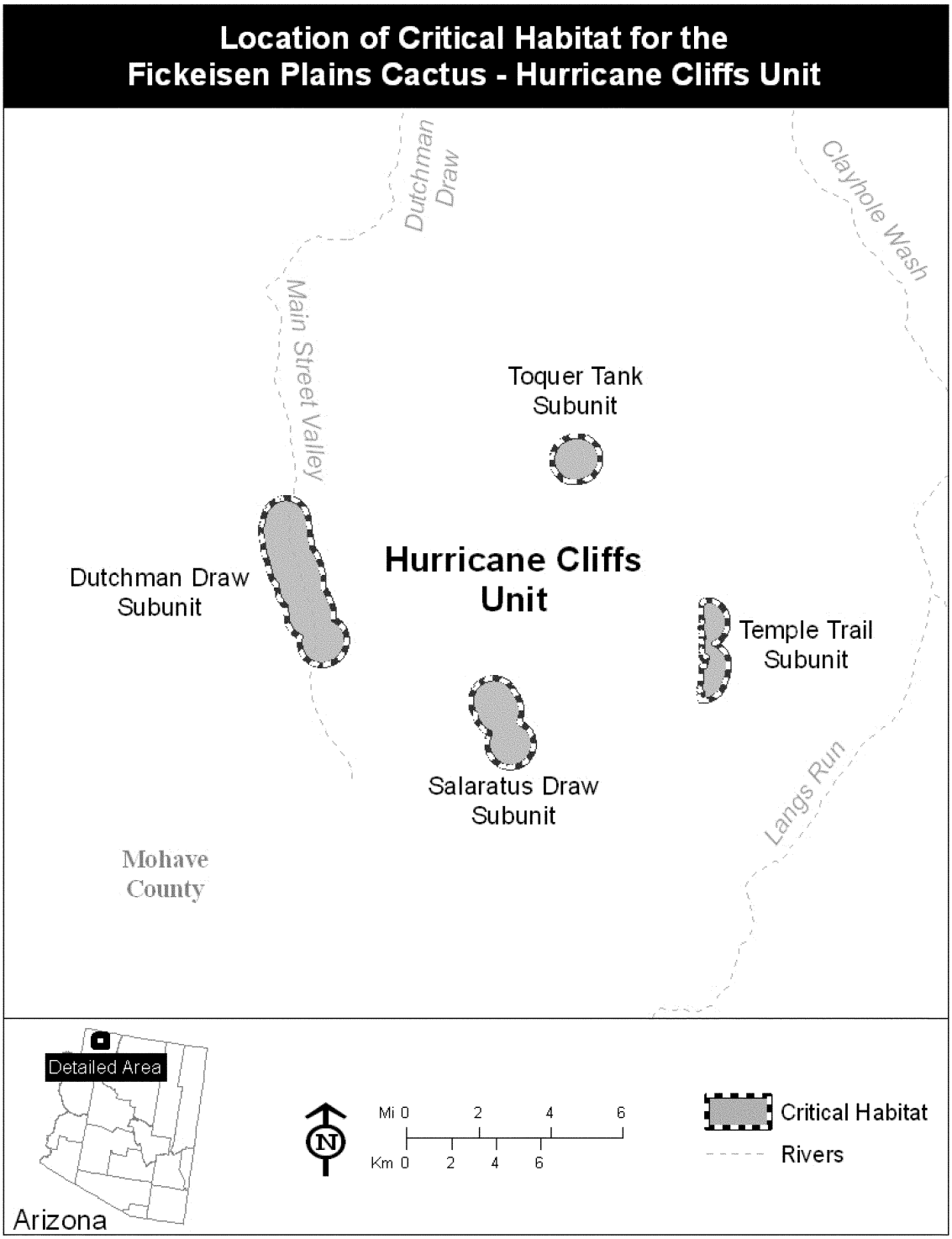

(7) Unit 2: Sunshine Ridge Unit, Mohave County, AZ. Map of Units 2 and 3 follow:

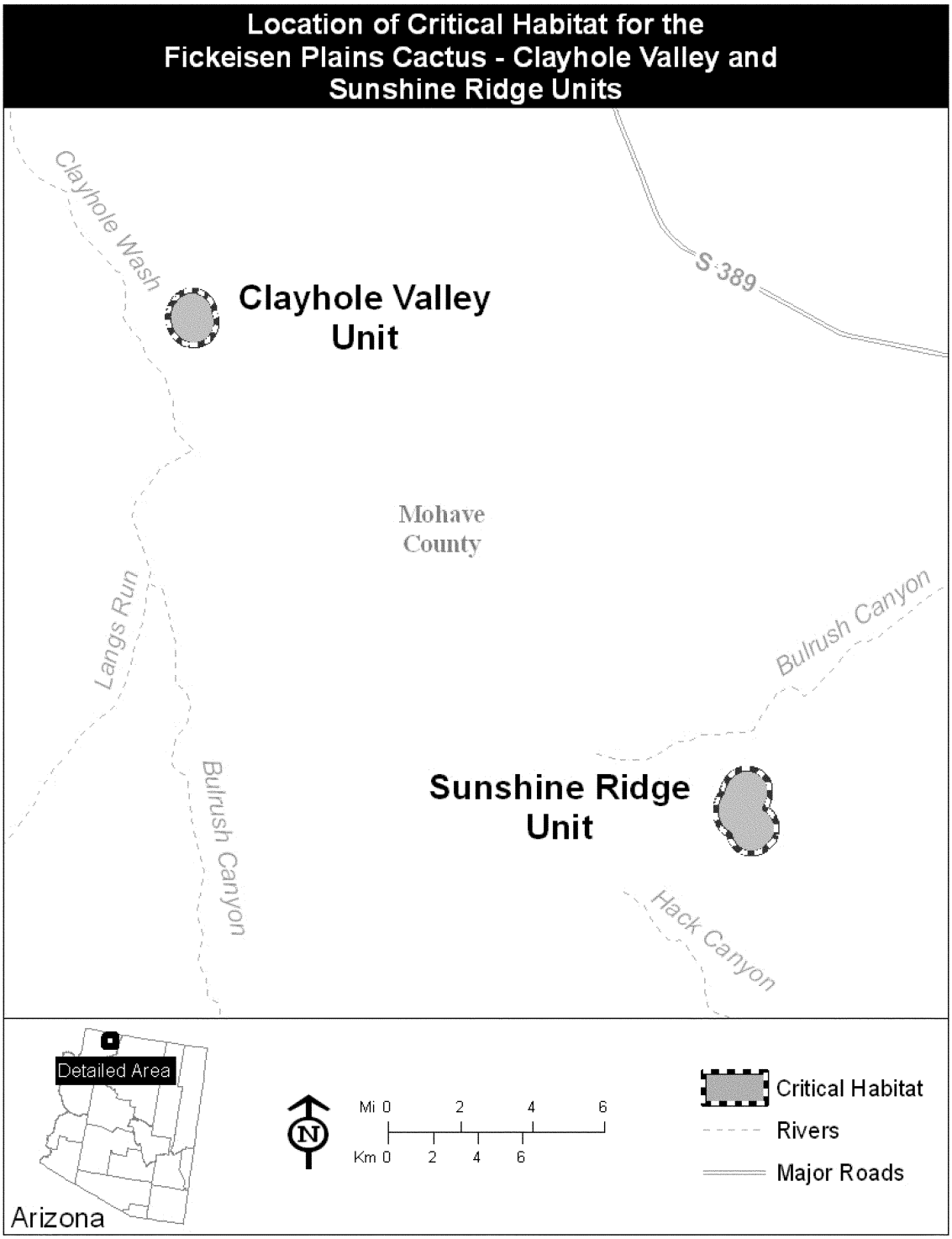

(8) Unit 3: Clayhole Valley Unit, Mohave County, AZ. Map of Unit 3 is provided at paragraph (7) of this entry.

(9) Unit 4: Snake Gulch Unit, Coconino County, AZ. Map of Unit 4 follows:

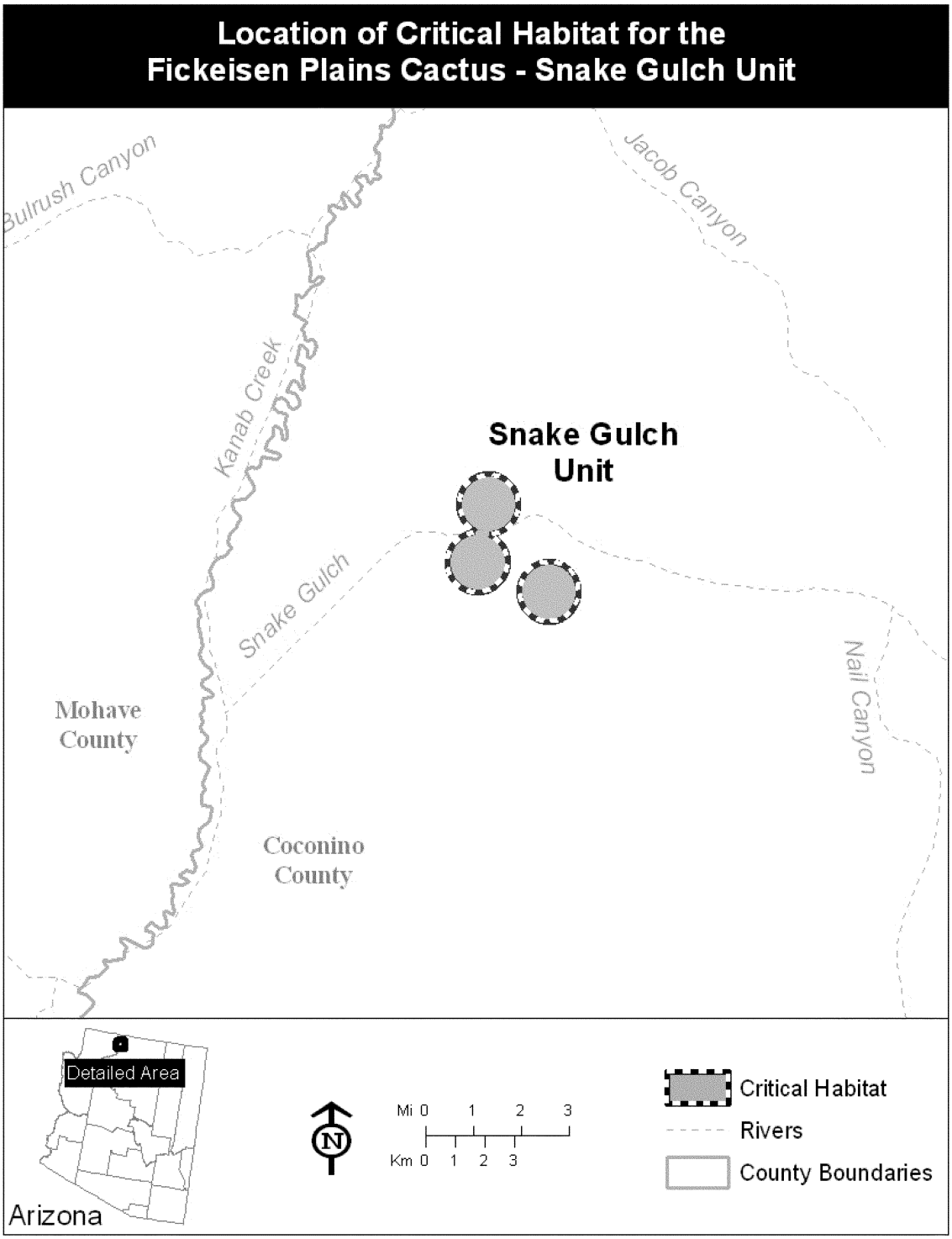

(10) Unit 5: House Rock Valley Unit, Coconino County, AZ. Maps of Unit 5 and 6 follows:

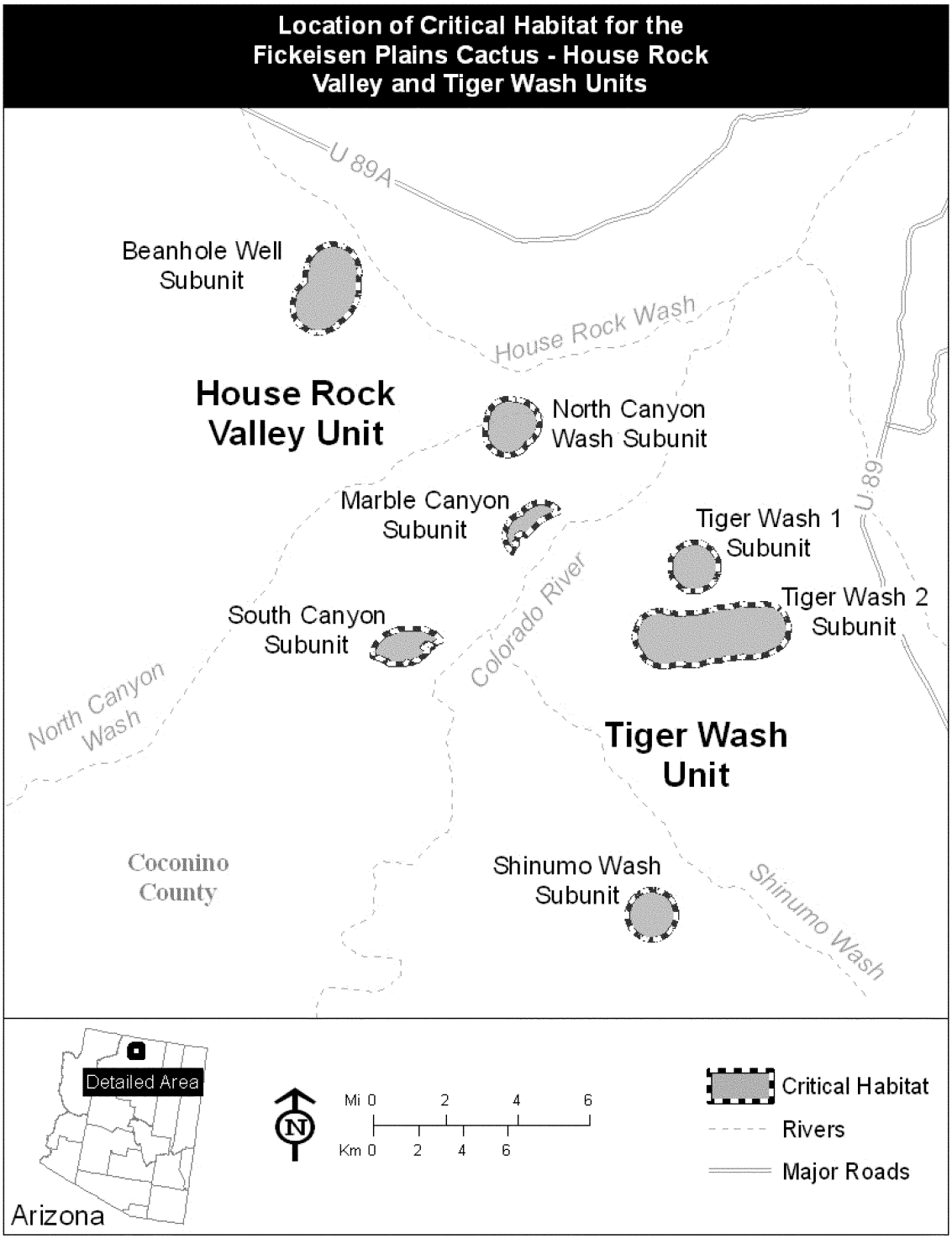

(11) Unit 6: Tiger Wash Unit, Coconino County, AZ. Map of Unit 6 is provided at paragraph (10) of this entry.

(12) Unit 7: Little Colorado River Overlook Unit, Coconino County, AZ. Map of Units 7 and 8 follows:

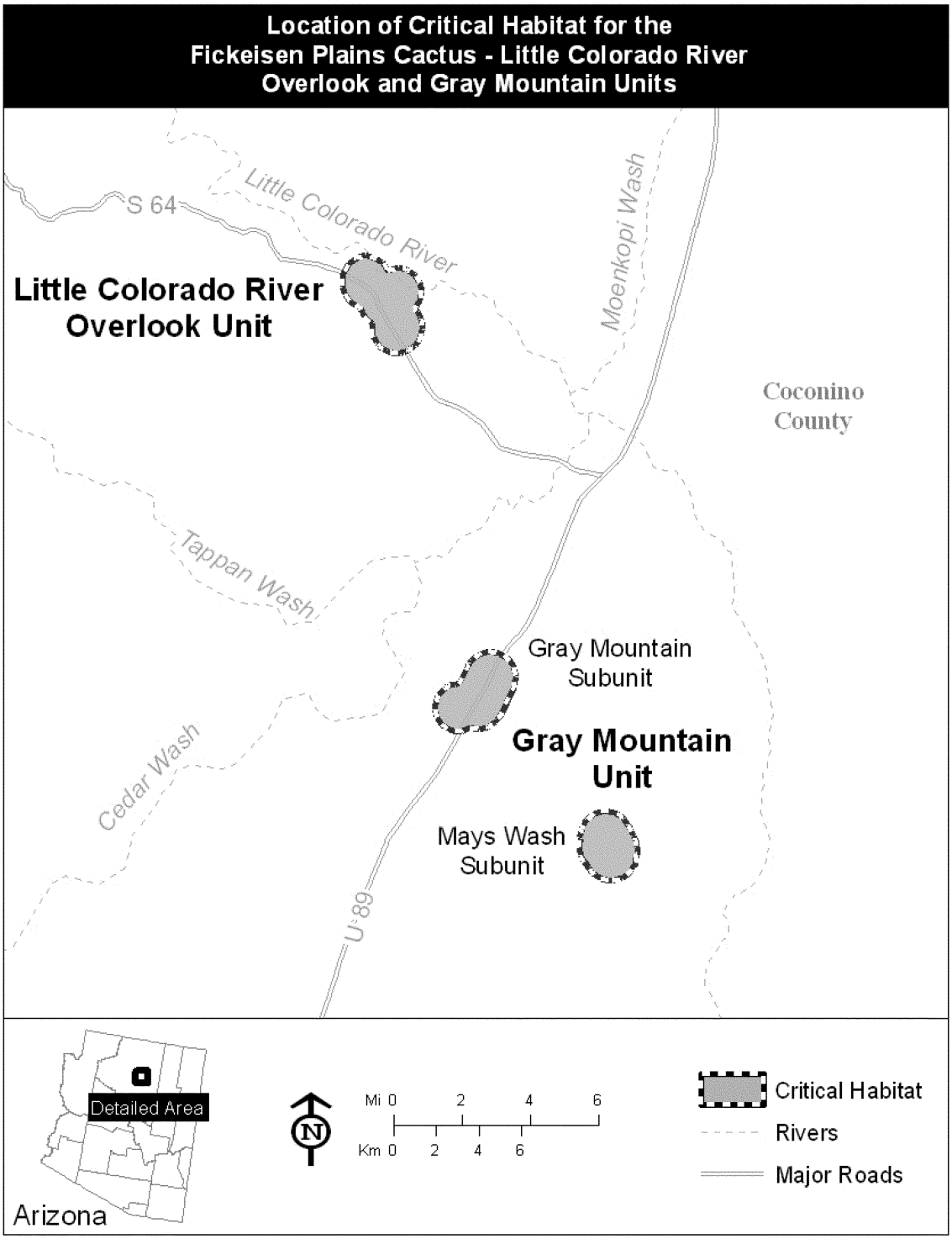

(13) Unit 8: Gray Mountain Unit, Coconino County, AZ. Map of Unit 8 is provided at paragraph (12) of this entry.

(14) Unit 9: Cataract Canyon Unit, Coconino County, AZ. Map of Unit 9 follows:

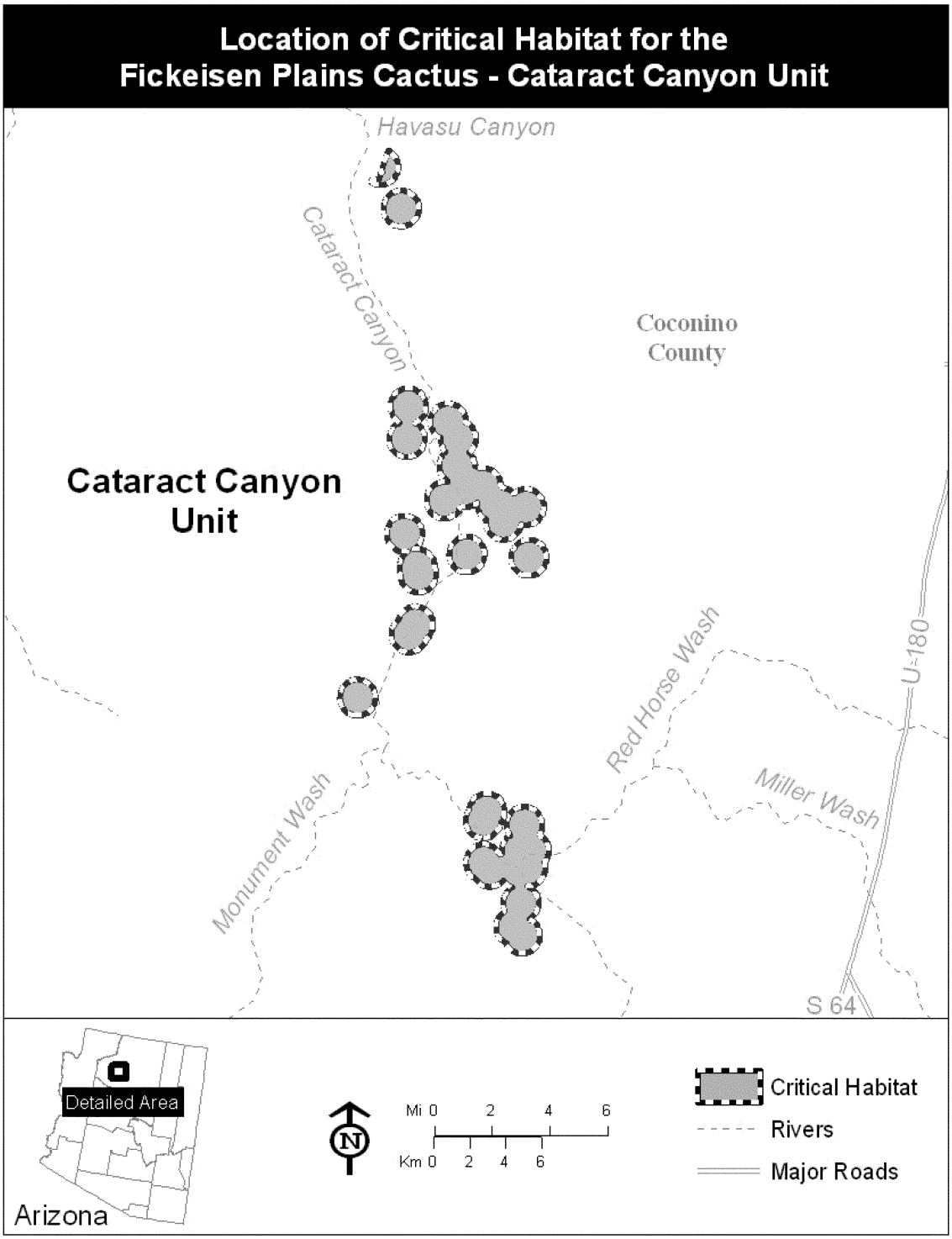

* * * * *

Dated: September 17, 2012.

Michael J. Bean,

Acting Principal Deputy Assistant Secretary for Fish and Wildlife and Parks.

[FR Doc. 2012–23853 Filed 10–2–12; 8:45 am]

BILLING CODE 4310–55–C

FEDERAL REGISTER

Vol. 77 Wednesday,

No. 192 October 3, 2012

Part III

Farm Credit Administration

12 CFR Parts 611, 612, 619 et al.

Compensation, Retirement Programs, and Related Benefits; Final Rule

FARM CREDIT ADMINISTRATION

12 CFR Parts 611, 612, 619, 620 and 630

RIN 3052–AC41

Compensation, Retirement Programs, and Related Benefits

AGENCY: Farm Credit Administration.

ACTION: Final rule.

SUMMARY: The Farm Credit Administration (FCA, us, we, or our) amends our regulations for Farm Credit System (System) banks and associations to require disclosure of pension benefit and supplemental retirement plans and a discussion of the link between senior officer compensation and performance. Also, we are amending our regulations to require timely reporting of significant or material events that occur at System institutions between annual reporting periods. We believe these requirements will promote transparency of and consistency in disclosures and ensure timely reporting to shareholders. In addition, the final rule establishes minimum responsibilities that a compensation committee must perform. Further, the final rule requires that System banks and associations provide for a non-binding, advisory vote on senior officer compensation by shareholders. Also, the final rule bifurcates existing annual reporting requirements at § 620.5 and makes other technical changes.

DATES: *Effective Date*—This regulation will be effective 30 days after publication in the **Federal Register** during which either or both Houses of Congress are in session. We will publish a notice of the effective date in the **Federal Register**.

Compliance Date—All provisions of this rule require compliance on the effective date, except advisory votes on compensation increases under § 611.410(b). Advisory votes on compensation increases of 15 percent or more are not required until 2014.

FOR FURTHER INFORMATION CONTACT:
Deborah Wilson, Senior Accountant, Office of Regulatory Policy, Farm Credit Administration, McLean, VA 22102–5090, (703) 883–4414, TTY (703) 883–4434,
or
Laura McFarland, Senior Counsel, Office of General Counsel, Farm Credit Administration, McLean, VA 22102–5090, (703) 883–4020, TTY (703) 883–4020.

SUPPLEMENTARY INFORMATION:

Table of Contents

I. Objective
II. Background
III. Comments and Our Responses
A. General Issues
1. FCA Policy Statement and Executive Orders
2. The Farm Credit Act
3. Examination and Enforcement
4. Informal Guidance
B. Specific Issues
1. Bifurcation of Annual Reporting Requirements Sections [existing § 620.5(h) through (k); new § 620.6]
2. Enhanced Disclosures of Senior Officer Compensation [new § 620.6(c)]
a. Pension Benefits Table [§ 620.6(c)(4)]
b. Discussion Related to Compensation Programs of Senior Officers [§ 620.6(c)(5)]
c. Tax Reimbursements [§ 620.6(c)(3)]
d. Disclosure of Plans [§ 620.6(c)(5)]
3. Compensation Committee Responsibilities [§§ 620.31 and 630.6(b)]
4. Notice to Shareholders [§§ 620.10, 620.11, 620.15, and 620.17]
5. Non-binding, Advisory Vote by Shareholders on Senior Officer Compensation [§§ 611.100, 620.5(a)(11) and 630.20(i); new §§ 611.360, 611.410 and 620.6(c)(6)]
a. Advisory Votes Based on Increase in Compensation
b. Advisory Votes Based on Petitions
c. Advisory Voting Procedures
d. Reporting and Disclosure of Advisory Votes
6. Disclosure of Supplemental Retirement Plans to Employees [§ 620.5(e)]
7. Miscellaneous [§§ 611.330(c), 611.400, 620.2(c) and (d), 620.4(c), 620.10(c), and 620.11]
C. Compliance Date
IV. Regulatory Flexibility Act

I. Objective

The objectives of the final rule are to:

- Improve the transparency and completeness of senior officer compensation and retirement benefits disclosures;
- Promote the continued safety and soundness of System institutions by establishing minimum responsibilities to be performed by an institution's compensation committee;
- Ensure timely communication with System shareholders on significant or material events that occur at institutions between annual reporting periods;
- Provide shareholders with a clear and complete understanding of their institution's obligations and commitments related to supplemental retirement benefit plans (SRP) for all employees; and
- Encourage member participation in the control and management of their institution by establishing criteria under which an institution must provide its voting shareholders the opportunity to cast a non-binding, advisory vote on senior officer compensation.

II. Background

The Farm Credit Act of 1971, as amended (Act),[1] authorizes the FCA to issue regulations implementing the Act's provisions.[2] Our regulations are intended to ensure the safe and sound operations of System institutions and to govern the disclosure of financial information to shareholders of, and investors in, the System. Congress explained in section 514 of the Farm Credit Banks and Associations Safety and Soundness Act of 1992 (1992 Act)[3] that disclosures of financial information and compensation paid to senior officers, among other disclosures, provide System shareholders with information necessary to better manage their institution and make informed decisions regarding the operation of their institution.

In addition, the FCA Board declared its commitment to support the cooperative business model and structure of System banks and associations in its October 14, 2010, resolution.[4] We emphasize the cooperative principles of a farmer-owned, Government-sponsored enterprise by advancing regulatory proposals that encourage farmer- and rancher-borrowers to participate in the management, control, and ownership of their institutions.

On November 18, 2010, we issued an advance notice of proposed rulemaking (ANPRM) to gather information for the development of a proposed rulemaking on disclosures of senior officer compensation and other related topics.[5] In consideration of the responses received, the FCA issued a proposed rule on January 23, 2012, to amend our regulations governing:

- Enhanced disclosures of senior officer compensation and retirement benefits and supplemental retirement plans for all employees;
- Timely notices to shareholders of significant or material events occurring at their institution;
- Minimum responsibilities to be performed by compensation committees; and
- A non-binding, advisory vote by shareholders on senior officer compensation.[6]

[1] Public Law 92–181, 85 Stat. 583 (1971), 12 U.S.C. 2001, *et seq.*

[2] 12 U.S.C. 2252(a)(8), (9) and (10).

[3] Public Law 102–552, 106 Stat. 4131 (1992).

[4] Copies of the resolution may be obtained by contacting the FCA.

[5] *See* 75 FR 70619 (Nov. 18, 2010).

[6] *See* 77 FR 3172 (Jan. 23, 2012).

III. Comments and Our Responses

The comment period for the proposed rule closed on April 16, 2012.[7] We received 458 comment letters to the proposed rule from individuals and entities associated with the System, including each of the four Farm Credit banks, System associations, and the Farm Credit Council (Council), responding on behalf of its members. The majority of the comment letters supported the Council's comments. We discuss the comments to our proposed rule and our responses below. Unless otherwise discussed in this preamble, areas of the proposed rule that did not receive comment are finalized as proposed.

A. General Issues

In this section of the preamble, we address comments questioning our authority to issue this rule, those making reference to policy statements, laws and our examination authority, and those suggesting non-regulatory methods to address the subjects within this rulemaking.

1. FCA Policy Statement and Executive Orders

A few commenters stated that the proposed rule was inconsistent with FCA Board Policy Statement FCA–PS–59.[8] FCA–PS–59 sets out our regulatory philosophy on developing and issuing regulations necessary to carry out the Act and the strategies to accomplish that philosophy. Commenters asserted they found no reasoned determination of the beneficial value of the proposed rule relative to the cost. Other commenters stated that our rule may not comply with the instructions of Executive Orders 13563 and 13579 that agencies consider quantitative and qualitative costs and benefits of a rulemaking.[9] Also, commenters remarked that we did not specifically identify risks or problems that needed to be addressed in a rulemaking and that current compensation practices within the System are not excessive and do not pose undue risk. Other commenters stated we had not completed a cost-benefit analysis before proposing the rule. A few commenters expressed concern at the implementation efforts that would be required if the rule became final. Many commenters remarked that we should not impose regulatory requirements that restrict individual institution discretion in compensation practices. Several commenters expressed concern that the rule does not give sufficient consideration to the varied asset size and operations of System institutions. A few commenters stated the rule was a regulatory burden.

We believe that this rulemaking is consistent with FCA–PS–59 and the objectives of Executive Orders 13563 and 13579.[10] FCA–PS–59 incorporates the provisions of the Executive Orders. It states that the FCA will develop regulations based on a reasoned determination that the benefits justify the cost of regulating an issue and that preambles to regulations will explain the rationale for the regulatory approach adopted. The FCA is the independent Federal agency in the executive branch of the Government responsible for examining and regulating System institutions. When issuing regulations, we consider if the rulemaking duplicates other requirements, would be ineffective, or impose burdens greater than the benefits received. We promulgate rules necessary to implement the expectations and requirements of the Act, which in the case of compensation practices within the System, is to support shareholder participation in the management, control, and ownership of the System and, more broadly, to protect and promote the safety and soundness of System institutions through oversight of management. We believe this rule clarifies the intended meaning of certain existing rules, eliminates confusion through reorganization of the rules, enhances the consistency, transparency, and timeliness of disclosures to shareholders and investors, helps ensure safe and sound compensation practices, and enhances communication with and encourages participation by shareholders in the management and control of their institution. Therefore, in light of these benefits, we do not believe this rule is inconsistent with FCA–PS–59 or Executive Orders 13563 and 13579 and does not result in a significant adjustment of or burden to individual institution operations.

The provisions of FCA–PS–59 and the Executive Orders do not limit us to issuing regulations only when there is an existing adverse risk or problem. Our responsibilities as a safety and soundness regulator require us to be proactive and prudent in our rulemaking, as well as reactive by providing standards that help avert potential problems. This rulemaking is intended to ensure that appropriate compensation practices and consistent and transparent disclosure standards exist for all System institutions. We considered the size, complexity, risks, interrelationships, and resources of System institutions when developing this rule. While we believe it is important to preserve individual institution flexibility when possible, our regulatory responsibility requires us to issue regulations that we determine appropriate for safety and soundness. In keeping with today's changing economic and business environments, and in accordance with the findings of Congress under section 514 of the 1992 Act and FCA Board Policy Statement FCA–PS–80, ''Cooperative Operating Philosophy—Serving the Members of Farm Credit System Institutions,'' [11] we believed it was appropriate to review and update our rules on senior officer compensation disclosures and other related topics.

2. The Farm Credit Act

Commenters claimed we did not consider the approach taken by other financial regulators. They questioned if this rulemaking is consistent with the requirements of other regulators, given the provisions of section 5.17(a)(8) of the Act.[12] Section 5.17(a)(8) of the Act authorizes us to regulate the preparation and dissemination by System institutions of information on financial condition and operations to shareholders and investors. This section of the Act instructs the FCA to establish regulations on the dissemination of financial statements that are not more burdensome or costly than those of national banks. Commenters asserted that we need a compelling business justification to exceed the disclosure requirements of other regulated entities.

We believe this rulemaking is consistent with the requirements of other regulators. Commenters referencing section 5.17(a)(8) of the Act stated that the FCA is to follow the disclosure requirements of financial entities that are not publicly traded. However, section 5.17(a)(8) of the Act makes no distinction between the financial regulation of publicly traded and non-publicly traded national banks. The Act incorporates all financial regulations of commercial banks, regardless of whether or not the banks are publicly traded. Therefore, the FCA

[7] The FCA extended the original 60-day comment period at the request of interested parties. *See* 77 FR 16485 (Mar. 21, 2012).

[8] Regulatory Philosophy, 76 FR 54638 (Sept. 1, 2011), effective July 8, 2011.

[9] E.O. 13563, ''Improving Regulation and Regulatory Review,'' dated January 18, 2011, and E.O. 13579, ''Regulation and Independent Regulatory Agencies,'' dated July 11, 2011.

[10] Executive Order 13563 does not apply to independent agencies, but Executive Order 13579 requests independent regulatory agencies to follow the principles contained in Executive Order 13563.

[11] *See* 75 FR 64728, Oct. 20, 2010.

[12] 12 U.S.C. 2252(a)(8).

uses all financial industry regulations as the parameters for financial disclosures, while also considering the cooperative structure of the System, and has done so in this rulemaking. Further, while FCA requirements governing the dissemination to shareholders of quarterly reports may not be more burdensome or costly than the requirements applicable to national banks, as an independent regulator of the System we are not required by section 5.17(a)(8) of the Act to mirror the actions of other regulators. Instead, we consider those policy positions and decide if we should follow them or take a different approach. Also, the commenters did not incorporate the admonition of the 1992 Act regarding compensation disclosures of System directors, officers, and employees. The 1992 Act requires that FCA regulations ensure compensation disclosures provide information necessary to assist shareholders in making informed decisions regarding the operation of their institutions.

A few commenters asserted that we had violated the provisions in the Act, which provide for bank and association boards of directors to establish compensation for senior officers and staff. We are not regulating the amount or manner in which bank and association senior officers and employees are compensated. Instead, many of the provisions in the rule relate to the disclosure of that compensation. Provisions in the rule also address safety and soundness concerns that an institution must consider when establishing compensation plans. Our general authority at section 5.17(a)(9) and (10) of the Act empower us to issue regulations for the safety and soundness of the System and to carry out the provisions of the Act. Finally, we are promoting cooperative principles by providing additional avenues for shareholders to have a greater voice in how senior officer compensation is distributed. None of these actions violates provisions in the Act, especially those relating to determining compensation.

Some commenters stated that our rulemaking efforts conflict with section 5.17(b) of the Act. This section of the Act precludes the FCA from approving institution bylaws. The prohibition on bylaw approval doesn't preclude rulemaking on matters affecting an institution's bylaws or the safe and sound operations of System institutions. In fact, section 5.17(a)(9) of the Act directs us to issue rules and regulations ''necessary or appropriate'' to carry out the Act. As we have explained in other rulemakings, issuing rules affecting bylaws does not mean we are approving bylaws in violation of section 5.17(b) of the Act. In pursuit of ensuring a safe and sound System and carrying out the Act, institution bylaws are necessarily impacted by our rules. Consequently, we may regulate the terms and conditions by which institutions exercise their powers through their bylaws, while not approving the bylaws themselves, and then examine compliance with our regulations.

3. Examination and Enforcement

Many commenters cited our examination and enforcement authorities as a sufficient means to address disclosure issues, concluding that additional regulations are unnecessary. Commenters stated that because there is no significant safety and soundness concern currently in the System, the suggested approach would be to minimize the burden of regulatory requirements and target individual institutions with possible problems, rather than address the issue at the System level.

We examine to ensure the safety and soundness of System institutions and their compliance with laws and regulations. This function is not a substitute for our responsibility to issue regulations implementing the Act and ensuring the safety and soundness of System institutions. Our regulations provide minimum standards of performance by System institutions. Our examiners use our rules as the basis for compliance determinations and to require any necessary corrective actions. Regulations reduce the likelihood that examinations will uncover unsafe and unsound practices and provide a minimum standard of performance to assure stakeholders of the safe and sound operations of System institutions.

Also, commenters stated that we have enforcement powers necessary to correct any unsafe or unsound compensation practices without adopting this rule. Commenters asserted that the rule undermines a risk-based examination approach. However, the commenters did not elaborate on how that examination approach is compromised by this rulemaking. While we agree with the commenters that we have enforcement authority, we do not view it as our only tool for ensuring the safety and soundness of System institutions. Safe and sound operations of individual System institutions are supported by a clear set of rules, compliance with those rules and thorough examinations.

4. Informal Guidance

Commenters supported our objective of improving System disclosures, agreeing that existing regulations needed updating. However, they questioned the need for additional regulations on shareholder involvement and the activities of the compensation committees. Commenters also remarked that adoption of the rule could carry unintended consequences and undermine the stated objectives of the rule. The commenters explained that a compensation committee could manipulate compensation in order to avoid the proposed non-binding, advisory vote on chief executive officer (CEO) or other senior officer compensation. We address comments on the non-binding, advisory vote in that section of this preamble.

Commenters asked that we withdraw the rule and work with the System to find a non-regulatory approach to strengthen institution disclosures and compensation practices. Many of these commenters remarked that the rule is contrary to the guidance contained in ''The Director's Role'' handbook issued by FCA,[13] pointing out that the handbook emphasizes the board's governance responsibilities for member-owners and that the responsibility is undermined by excessive regulation.

The guidance in ''The Director's Role'' is not contradicted by this rulemaking. ''The Director's Role'' emphasizes the boards of directors' responsibilities to member-owners and the use of good governance practices in fulfilling those responsibilities. This rulemaking recognizes those responsibilities and promotes good governance through transparent, timely and consistent disclosures, enhancing the fiduciary role of the compensation committee, and providing for communication with and engagement by member-owners. The ''Director's Role'' emphasizes, as does this rulemaking, the cooperative structure of the System and the related accountability of directors to shareholders. This rulemaking supports accountability through enhanced disclosures and advisory votes, while setting a minimum set of responsibilities for the compensation committee. A voluntary or non-regulatory approach to strengthening disclosures and compensation is valuable, but it does not replace the consistency and stability that rules provide in assuring System stakeholders of complete, consistent and transparent disclosures and good governance practices over compensation. An effective compensation and disclosure process is critical to good governance,

[13] ''The Director's Role: A Guide to Leading Your Institution Effectively,'' (FCA publication, *www.fca.gov*).

which in turn is essential for institution safety and soundness.

One commenter added that cooperatives are historically given great deference by State regulators in setting policy. The comment did not account for the fact that the System is a Government-sponsored Enterprise (GSE) with a public policy mission.[14] In the 1992 Act, Congress reiterated the need for adherence to this mission, particularly in the area of compensation disclosures, through FCA regulation.

We have analyzed the comments received and have amended certain provisions in this final rulemaking. We discuss comments specific to certain provisions in the following section of the preamble.

B. Specific Issues

1. Bifurcation of Annual Reporting Requirements Sections [existing § 620.5(h) through (k); new § 620.6]

We proposed moving the disclosure requirements for directors and senior officers to new § 620.6. Also, we proposed that § 620.5(h) contain a reference to § 620.6, stating that the presentation of the § 620.6 disclosures would continue to be required in the annual report. No changes to the current requirements of existing § 620.5(h), (j), and (k) were made, except to remove redundancy and enhance clarity in the regulatory language in existing § 620.5(i). We also clarified where to disclose the required statement that the information on compensation for any individual senior officer, as disclosed in the Summary Compensation Table (Compensation Table), is available to shareholders upon request. As conforming technical changes, we proposed changing references to the disclosures in the annual report related to director and senior officer compensation and conflicts of interest, and addressed in other sections of our rules, to their location in new § 620.6. We received no comments on these organizational changes and finalize them as proposed. However, we received comments on existing provisions in this section, and discuss those comments below.

Existing regulations require that the aggregate senior officer group reported in the Compensation Table include all senior officers plus employees whose compensation is among the five highest paid during the fiscal year, regardless of whether or not those employees are senior officers (the aggregate group). One commenter requested clarification on what compensation measures should be used to determine which employees are among the five highest paid. The commenter stated that if compensation included all elements identified in the Compensation Table, the aggregate group would be more than just senior officers. We clarify that compensation measures used to determine which employees are among the five highest paid includes all amounts included in the ''total'' column of the Compensation Table. We remind the commenter that this is not a new provision.[15]

Also, existing regulations provide that shareholders may request information on the compensation of any individual included in the aggregate group.[16] Commenters objected to our clarifying that the request for information on compensation could be made on any employee reported in the aggregate group. Commenters asserted that the clarification ''expanded'' shareholder access to compensation information on highly compensated employees reported in the aggregate group. They requested that we limit shareholder access solely to the information on the compensation of senior officers. Commenters asserted that employees included in the aggregate group who are not covered by the § 619.9310 definition of ''senior officer'' should not have their individual compensation accessible by shareholders. Commenters stated that release of this information would result in personnel issues, including ''poaching'' of employees. However, several commenters acknowledged that most institutions have never received a request by a shareholder for information on any individual's compensation reported in the aggregate group.

We continue to believe that it is important for shareholders to have access, without restriction, to individual compensation information of the aggregate group. We proposed no changes to the requirement and are not persuaded to change it now, especially as commenters to this rulemaking stated their institutions have never had a shareholder make a request under the provision. Institutions may neither question the reason for a shareholder request, nor record the request in the shareholder's files. Institutions must promptly provide the information to their shareholders.

A few commenters requested we change compensation disclosures from a ''paid'' to an ''earned'' basis to more closely resemble generally accepted accounting principles (GAAP). We did not propose changes to this area, but may consider the matter in a future rulemaking. Deferred compensation reported under § 620.6(c) continues to be reported on an earned basis.

A few commenters asked that we remove deferred compensation from the Compensation Table because it is already included in reported salary or bonus amounts. The commenters suggested reporting deferred compensation only when the employee bears a risk in the investment or the institution provides enhanced benefits. These comments relate to an existing provision that requires reporting of deferred compensation in the Compensation Table, which has been a requirement since 1994.[17] As is currently required, amounts reported in the deferred compensation/perquisites column of the Compensation Table include the dollar value of other annual compensation not properly categorized as salary or bonus. Therefore, the existing rule addresses commenters' issues and, if followed, prevents duplicative reporting.

A few commenters objected to the Compensation Table including disclosure of severance pay to senior officers and requested we allow institutions discretion on disclosing this information. Commenters noted that disclosure of this information may result in litigation for the institution and may limit the use of severance plans. This required disclosure is not a new disclosure and changes to it were not part of the proposed rule. In addition, we do not believe that this provision should be changed since severance plans continue to be used by institutions, notwithstanding their disclosure in the annual report. The final rule retains the existing requirement to include severance in the ''Other'' column of the Compensation Table.

We proposed a definition of supplemental retirement plans in § 619.9335 of our general definition section. We received no comments on the proposed definition, but in reviewing comments on disclosure of these retirement plans we identified a

[14] Section 1.1 of the Act (12 U.S.C. 2001).

[15] This provision was added in a 1986 rulemaking. We explained that the rule ''* * * required that the aggregate compensation of senior officers (and at a minimum the top five most highly paid officers, whether or not designated as senior officers) be disclosed without naming the individuals included.'' *See* 51 FR 21336 (June 12, 1986).

[16] The 1986 final rulemaking preamble stated disclosure of the salaries of individual senior officers or anyone else included in the aggregate is available to shareholders upon request. The 1986 rulemaking only limited the ''upon request'' availability to those whose total compensation exceeded $50,000. *See* 51 FR 21336 (June 12, 1986). This threshold limit was removed in the 2006 governance rulemaking. *See* 71 FR 5740 (February 2, 2006).

[17] 59 FR 37406 (July 22, 1994).

technical issue with the proposed definition. The proposed rule clearly explains the definition applies to all supplemental retirement plans funded by System institutions, not just those of the Farm Credit banks or associations. We are therefore making a technical correction in the final rule to replace the term ''Farm Credit bank or association'' with ''Farm Credit institution'' in the § 619.9335 definition of supplemental retirement plans.

2. Enhanced Disclosures of Senior Officer Compensation [new § 620.6(c)]

We proposed requiring disclosure of:

- Institution obligations related to SRPs and supplemental executive retirement plans (SERPs);
- The overall risk and reward structure of compensation, pension benefit and retirement plans;
- The link between institution performance and senior officer compensation as reported in the Compensation Table; and
- The dollar amount of tax reimbursements or tax payments provided by the institution to senior officers.

The final rule incorporates many suggestions offered by commenters to clarify provisions of the rule and enhance the value of the disclosures.

Commenters stated their support for updating existing FCA regulations on compensation disclosures to ensure consistency, transparency, and clarity. One commenter asked that the required disclosures conform to its existing practices. Some commenters also stated existing disclosures already are more detailed than necessary, reducing the value of the annual report. A few others remarked that compensation is a sensitive subject that should not be overly publicized. Others remarked that disclosure requirements should be limited to those that are material and meaningful, stating the current rulemaking creates excessive disclosures that lack materiality.

The FCA weighs the cost and burden of making disclosures against the value the disclosures provide shareholders and investors. Our rules must factor in the varied and increasingly complex compensation and retirement programs at all institutions. We believe the additional disclosures are necessary to ensure that shareholders are informed of all the key elements of senior officer compensation and retirement, and facilitate consistent disclosures among System institutions. Also, we remind commenters expressing concern over publicizing System compensation practices that, in addition to the requirement in the 1992 Act for disclosure of compensation paid to senior officers, the System is a GSE with responsibility for public accountability.

One commenter stated that reporting senior officers in the aggregate for both the Compensation and Pension Benefits Tables could produce misleading results. The commenter explained that because the compensation of a single member of the aggregate group might change, the aggregate reporting might give results not representative of the entire group. The commenter did not suggest an alternative reporting method. In this rulemaking, we did not propose disclosing compensation on an individual basis and the final rule does not require it. However, any institution may voluntarily provide clarity and transparency to the quantitative data by including a qualitative discussion on the compensation of each member of the aggregate group.

One commenter asked that we change the definition of ''senior officer'' in § 619.9130 to only include the CEO [18] and the most senior level of officers reporting to the CEO. We proposed no changes to this definition and the final rule does not make one. We continue to believe the existing definition of senior officer, developed in consideration of the Securities and Exchange Commission (SEC) definition for ''executive officer,'' accurately captures senior staff at institutions.[19] It includes those senior officer positions found in most lending institutions and includes other employees involved in setting institution policy. Therefore, the final rule retains the existing definition of senior officer.

Commenters suggested having disclosure provisions vary by the size of the institution. Other commenters endorsed consistency in disclosures at all sizes of institutions. We continue to believe the required disclosures are relevant information for shareholders regardless of the size of the institution. This belief is expressed in FCA–PS–80, where we explain that System institutions are member-focused cooperatives deriving benefit from members participating in the management, control, and ownership of their institutions. Irrespective of size, shareholders need relevant information in order to engage in any meaningful way in the management and control of their institutions. We continue to believe that compensation information on the CEO and other senior officers is relevant information. Subject to applicable law and regulations, the quality and quantity of that information should be based on the compensation policies and practices of the institution and not driven by size.

a. Pension Benefits Table [§ 620.6(c)(4)]

We proposed a new § 620.6(c)(4) that would have required institutions to disclose certain information on pension benefit plans in tabular format, including disclosure of SERPs in a Pension Benefit Table. The information proposed to be disclosed included:

- Funded and unfunded present value of accumulated benefits for CEO and other senior officer pension and retirement benefit plans;
- Years of credited service; and
- Vested and unvested dollar amounts.

Also, the proposed rule would have required the reporting of off-balance sheet commitments related to senior officer compensation and pension benefits, such as benefits earned but not yet vested.

Commenters stated support for improved annual report disclosures on SRPs, but made several suggested changes to enhance the disclosures. Commenters noted that allocations to the benefit programs are done on a macro basis and suggested aggregate plan reporting, which would be in accordance with GAAP. Commenters explained that institutions are unable to break out the data into vested and unvested amounts. They stated that individual reporting would be overly burdensome and goes beyond reporting required by GAAP and SEC requirements. Also, commenters noted that plan assets used to fund the benefits are fungible and not specifically assigned to individual participants. We did not intend that § 620.6(c)(4) require disclosure by individual employee. The final rule clarifies that the requirement to separately report pension benefits was intended to separate CEO benefits from other senior officers in the aggregate, similar to the reporting requirements in the Compensation Table. Also, commenters suggested that we align the disclosures in the Pension Benefits Table to similar System disclosures and that institutions report payments made during the fiscal year and the present value of accumulated benefits, in lieu of funded and unfunded and vested and unvested amounts.

We agree that many of these suggested changes provide more meaningful disclosures to shareholders and investors on pension benefits and are consistent with disclosure in the combined System-wide report to

[18] Use of the title ''Chief Executive Officer'' includes all persons occupying that position or similar positions, regardless of the actual title used. *See* 12 CFR 619.9130.

[19] *See* governance rulemaking adding definition, 71 FR 5740 (Feb. 2, 2006).

investors. Therefore, the final rule at § 620.6(c)(4) replaces the proposed disclosures in the Pension Benefits Table with the:

- Plan name;
- Years of credited service for the CEO and the average years of credited service for the other senior officers;
- Present value of accumulated benefits; and
- Payments made during the reporting period.

Also, the final rule removes the ''Total'' column from the Pension Benefits Table and makes corresponding changes to § 620.6(c)(4)(i), (ii), (iii), and (iv), which describe the required Pension Benefits Table disclosures. Also, we are moving the requirement that institutions disclose off-balance sheet commitments of compensation earned but not yet vested from this section to § 620.5(e)(4)(v).

Also, commenters responded that assumptions used to determine the present value of pension benefits could vary significantly among institutions and between reporting periods. Commenters suggested disclosing changes in pension value and the reason(s) for the change. Disclosure of the assumptions used to determine the present value was not a specific requirement of the proposed rule and is not part of the final rule. However, we refer commenters suggesting disclosure of the assumptions used to determine the present value of pension benefits or the reason for a change in the pension value to existing § 620.5(g). Section 620.5(g) requires disclosure of information necessary to an understanding of the institution's financial condition, changes in financial condition, results of operations, known trends, uncertainties, commitments, etc.

Commenters asked how information in the Pension Benefits Table is included in the Compensation Table. We considered the recommendations, the formats currently used by System institutions, and that used in the combined System-wide report to investors. For consistency with industry practice and the reporting practices of the System, the final rule requires that the change in pension value be included in the Compensation Table. The final rule removes the proposed language in § 620.6(c)(3)(iii) discussing the inclusion of the Pension Benefit Table in the ''Other'' column of the Compensation Table to eliminate potential confusion in compensation reported. This change does not remove the existing requirement to include retirement paid or contributions made by the institution to a defined contribution plan in the Compensation Table.

A few commenters requested that the header on the Pension Benefits Table not refer to ''annual'' but did not explain the reason for the request. To enhance clarity, the final rule requires that the information reported in the Pension Benefits Table be as of the most recent fiscal year end.

A few commenters asked us to clarify the provision in § 620.6(c)(3) exempting disclosure of contributions by an institution to a defined contribution plan if the plan is made available to all employees on the same basis. These commenters asked when the ''available to all employees'' is determined and explained that some plans were previously available to all employees, but are now available only to senior officers. We decline to make this clarification. If the plans are not open to all employees during the reporting period they must be reported in the Compensation Table.

b. Discussion Related to Compensation Programs of Senior Officers [§ 620.6(c)(5)]

We proposed requiring a discussion of the overall risk and reward structure of compensation, pension benefit and retirement plans, and the link between institution performance and CEO and other senior officer compensation as reported in the Compensation Table. We received comments supporting the requirement to discuss the relationship of compensation and benefit plans to an institution's business goals and the link between pay and performance. Commenters explained that existing disclosures on compensation plans do not characterize their risk to the overall operations of the institution. They specifically supported adding incentive pay disclosure to the annual report and stated that the additional disclosures would benefit the System, shareholders, and bond investors. However, a few commenters remarked that the requirement was unreasonable because it was too much information for the institution to summarize and too much information for the shareholder to digest. Several commenters expressed concern that the proposed disclosures would not materially improve the disclosures and that existing disclosures were fair to employees and transparent to shareholders.

The intent of the requirement is to provide shareholders with the information necessary to better manage their institution. We believe the data currently required to be disclosed and presented in the Compensation Table must have meaning beyond merely reporting numbers. Also, we believe the qualitative disclosures will provide shareholders with information that links pay with performance and will better enable them to make informed decisions regarding the operation of their institution. In making these disclosures, we expect institutions to discuss the criteria used to determine overall performance (*e.g.,* capital and risk management, credit risk and risk exposure to earnings, liquidity management, and compliance with financing agreements). In addition, we expect a discussion of the benchmarks or other factors used to determine compensation, including incentive-based compensation. We reiterate that the discussions can be succinct, but should also be specific to the institution rather than general or boilerplate discussions.

Also, in § 620.6(c)(6) we proposed that the institution disclose in the vicinity of the Compensation Table the authority of shareholders to petition for an advisory vote on CEO and senior officer compensation. In the final rule, we are making grammatical changes to the language. We are not changing the intent of the rule.

c. Tax Reimbursements [§ 620.6(c)(3)]

We proposed that tax reimbursements provided by the institution to senior officers be reported in the ''Deferred/Perquisite'' column in the Compensation Table as other personal benefits. Overall, commenters did not object to reporting tax reimbursements as part of senior officer compensation. However, commenters responded that such reimbursements are not naturally thought of as perquisites and should instead be included in the ''Other'' column in the Compensation Table. We do not object to reporting these reimbursements in the ''Other'' column of the Table. There is no de minimis exception for items required to be reported in the ''Other'' column and any item reported in the ''Other'' column must be described in a footnote to the Compensation Table. Our intent is to provide a more transparent disclosure of all tax reimbursements to CEOs and other senior officers, regardless of the dollar amount. Since the requested change fulfills this intent, the final rule requires tax reimbursements be reported in the ''Other'' column of the Compensation Table.

Commenters requested that we revise the ''Other'' column of the Compensation Table to exempt de minimis items from reporting requirements, similar to that for perquisites. We decline to adopt this suggestion because we did not propose

a de minimis level for other compensation. We believe other compensation is generally of a nature requiring full disclosure.

Also, commenters requested clarification on whether amounts reported in the perquisites and other compensation columns are reported by subcategory or by lump sum. The amounts reported in the ''Other'' column may be reported lump sum, but must also be described in a footnote. Compensation Table columns represent the entire amount for the reporting period. For example, if $11,600 were reported in the ''Other'' column, existing regulations require that a footnote describe the dollar amount of each item comprising the $11,600, such as $4,600 for tax reimbursements and $7,000 for severance pay. In addition, the $5,000 de minimis reporting exemption allowed for perquisites applies to the total of all perquisites for the reporting period, rather than each reportable perquisite. For example, if $3,100 was provided in the form of personal use of a company car and premiums of $2,200 were paid for life insurance by the institution, the $5,000 perquisite de minimis is exceeded and the lump sum of $5,300 would be reported in the Compensation Table.

d. Disclosure of Plans [§ 620.6(c)(5)]

Existing disclosure regulations require that an institution describe ''all'' plans offered to senior officers and highly compensated employees reported in the aggregate pursuant to which cash or noncash compensation was paid or distributed during the last fiscal year or is proposed to be paid or distributed in the future for performance during the last fiscal year. We proposed clarifying that the required discussion of plans include compensation, incentive, performance, and retirement and pension plans.

Commenters requested that we withdraw the requirement to report on ''all'' compensation plans because this requirement would result in voluminous and excessive disclosures in reports. They stated that the additional disclosures would give the appearance that compensation risks are greater than other risks. Also, they stated that disclosure of all plans goes beyond GAAP and SEC requirements. The proposed rule did not add the word ''all'' to the rule.

The requirement to report on all plans is an existing requirement. We are clarifying that compensation plans include all remuneration plans, such as salary, bonus, deferred compensation, incentive, performance, and retirement and benefit plans. We believe that the narrative disclosures can be provided in a succinct manner to include only those factors necessary to an overall understanding of each plan. We would expect the disclosures to include, at a minimum, the purpose or objective of each plan, the material terms of the plans, conditions of payments, and other information the institution considers necessary to further an overall understanding of the entire remuneration program as disclosed in the Compensation and Pension Benefits Table. As reporting ''all'' plans is existing language, we do not believe the clarification causes more excessive or burdensome disclosures. We believe describing all plans will result in enhanced shareholder understanding of the nature and scope of these plans and provide qualitative information to the quantified numbers reported in the Compensation and Pension Benefits Tables. Therefore, we finalize this provision of the rule as proposed.

Commenters asked if the requirement to discuss all compensation plans is by individual employee or for the aggregate senior officer group. One commenter expressed concern that the requirement might include reporting performance-based compensation on an individual basis, which could reveal confidential personnel information. The final rule explains that the disclosures are to be made individually for the CEO and in the aggregate for other senior officers and those highly compensated employees included in the aggregate group.

3. Compensation Committee Responsibilities [§§ 620.31 and 630.6(b)]

In 2006, the FCA issued the governance rule requiring institutions to establish compensation committees.[20] In the 2009 FCA Bookletter BL–060, ''Compensation Committees,'' we provide guidance on how a compensation committee should fulfill its obligations to the institution and shareholders. BL–060 was issued at a time of heightened concern and scrutiny on senior officer compensation. Continued scrutiny of, and concern regarding, compensation and retirement practices requires us to continue our prudent and proactive approach regarding regulation of compensation committee oversight responsibilities, including key factors identified in BL–060. We proposed requiring the compensation committee analyze or review its institution's:

- Long-term compensation and retirement benefit obligations and determine they are appropriate to the services performed and not excessive;
- Incentive-based compensation programs and payments and determine they are structured to consider future losses and risks to the institution;
- Senior officer compensation and incentive-based programs and determine they support the long-term strategy and promote safe and sound business practices; and
- Compensation programs for other select groups of employees.

Most commenters responded that the proposed requirements were too prescriptive and too rigid and did not follow a principles-based approach. Commenters stated that the guidance provided in BL–060 was adequate and that it provided the flexibility to adopt best practices. Commenters emphasized that BL–060 provided needed flexibility not apparent in the rule for institutions of various sizes and with different compensation programs. Commenters suggested that we follow other financial regulators and require the adoption of policies and use our examination authority to verify compliance with the bookletter.

The responsibilities required by this rulemaking are derived from key factors identified in BL–060 and, therefore, we do not believe the requirements in the rule are more rigid than the BL–060 guidance. For example, a key factor discussed in BL–060 is that a compensation committee should be able to fully analyze and justify the long-term liability to the institution in developing compensation packages and evaluate that incentive programs are based on long-term financial performance and are consistent with prudent risk-taking and produce a safe and sound outcome. Also, another key factor discussed is the committee's responsibility to ensure that retirement benefits are appropriate and not excessive. Further, we believe it is prudent to ensure these minimum responsibilities provided as informal guidance in BL–060 are incorporated into our regulations and routinely considered by the compensation committee when performing its duties. However, in consideration of the comments received, the final rule clarifies that compensation committees must document that the minimum responsibilities identified in the rule were considered when performing its duties.

Commenters discussed the perceived potential impact on the use of short- and long-term compensation programs under the rule. One commenter also questioned if the rule intended to require the use of claw-back provisions

[20] *See* 71 FR 5740 (Feb. 2, 2006).

to address risks. We did not intend the compensation committee responsibilities to limit or otherwise constrain the use of short- and long-term incentive programs, if those programs are determined appropriate by the committee, and have clarified the rule accordingly. In addition, we did not intend that the rule require or prohibit the use of claw-back provisions by the compensation committee. The rule, instead, seeks to ensure the committee considers the implications of incentive-based compensation programs, including providing safeguards that the programs are not unduly influenced by short-term performance expectations. The rule further clarifies that when conducting a risk assessment of compensation plans, the assessment is for undue risks. We recognize that some risks are inherent in any compensation program and we did not intend to require elimination of all risks.

We continue to promote the cooperative structure of governance and believe the compensation committee itself should determine that incentive-based programs and payments:

- Are reasonable and proportionate to the services performed;
- Support the institution's business strategy for achieving stated goals and are in accord with the institution's human capital and marketing plans;
- Ensure that the institution's compensation practices support the System's basic mission to serve all types of creditworthy agricultural producers; and
- Are structured so payout schedules consider the potential for future losses or undue risks to the institution.

We also clarify in the rule that existing regulations require that all compensation committees are to maintain records of meeting minutes. Documentation ensures that the committee's actions are memorialized, provides insight for future deliberations, and facilitates examination activities. In addition, the responsibilities of compensation committees at associations, banks, and the Funding Corporation are similar. Therefore, we are making a clarifying change in the final rule at § 620.31(b) to reflect this.

Commenters agreed that the compensation committee plays a key role in ensuring compensation programs are appropriate and do not jeopardize the institution's operations. However, these commenters stated that the Dodd-Frank Wall Street Reform and Consumer Protection Act of 2010 (Dodd-Frank Act) [21] did not place similar risk management responsibilities on the compensation committees of smaller publicly traded companies and, therefore, the FCA should not do so. Commenters requested that compensation committees of smaller institutions be exempt from complying with the regulation. We did not propose an exemption to the compensation committee requirements based on the size of the institution and do not agree with the requested exemption. Risk management is essential to the overall safety and soundness of each System institution and we continue to believe that the proposed compensation committee requirements are appropriate for all institutions regardless of asset size. The final rule does not provide for an exemption for smaller institutions.

Commenters claimed the rule would create undue costs and burdens for compensation committees. We believe this rule captures existing guidance and therefore will not cause undue additional costs and burdens. Commenters questioned whether the compensation committee should conduct a pre- or post-review of compensation plans. We would expect that the dynamic and sometimes complex nature of compensation plans require ongoing review by the committee. The rule is silent on when the committee should review compensation plans and allows it to carry out its responsibilities as it considers appropriate and necessary to fulfilling its stewardship role and fiduciary duties.

4. Notice to Shareholders [§§ 620.10, 620.11, 620.15, and 620.17]

We proposed requiring a separate notice to shareholders of significant or material events occurring in intervening reporting periods. The notice would serve to enhance timely and transparent communication to institution member/owners throughout the institution's fiscal year. We proposed allowing institutions to distribute the notice:

- In direct communications with shareholders;
- Via electronic distribution (e.g., a Web site);
- By publication with circulation wide enough to be reasonably assured that all shareholders have timely access to the information; or
- In the quarterly report to shareholders.

Also, the notice would be dated, signed and provided to the FCA at the same time it was distributed to shareholders.

Commenters supported such timely notice to shareholders and investors on significant and material events occurring in the System. Other commenters stated that significant and material disclosures are already reported in the quarterly and annual reports and, therefore, additional notice is unnecessary. Also, commenters noted that the Federal Farm Credit Banks Funding Corporation (Funding Corporation) issues press releases on behalf of the System and, as such, supported withdrawing the requirement for additional notices. One commenter stated that the rule could force release of information prematurely and to the detriment of the institution.

We recognize that existing quarterly and annual reports address material and significant disclosures of financial events. We are also aware that the Funding Corporation, in response to expectations of investors in the bond market, issues press releases for System-wide events. However, we proposed the notice for more than System-wide or financial events. We emphasized this by including a list of events that may require notice. Many of those events are disclosed only once a year in the annual report, if then. Because the notice is issued after a material or significant event has occurred, we do not believe issuing a notice is either premature or detrimental to the institution. We continue to believe that timely communication is important and, given the various means by which the institution may communicate the event, we do not believe an interim notice requirement is an unnecessary burden on institutions or that the communication will cause it to incur significant costs.

We proposed a list of certain events and circumstances we believed might be material or significant and that, if so, should be communicated to shareholders in a timely manner. Commenters expressed reservations about the materiality or significance of items in the list and remarked that the list was inflexible. Commenters responded that institutions should have the ability and latitude to interpret if an event was significant or material for reporting in a notice and requested that accounting principles and legal standards be used to determine if a notice is required. Also, several commenters suggested we replace the list with a provision requiring notice when determined necessary by the FCA. Some commenters offered specific remarks about the list of events themselves, stating that issuing a notice for personnel events of the type in the list would overstate their impact.

In response to comments, we are not including the list of events in the final rule. Instead, the final rule at § 620.15(a)

[21] Public Law 111–203, 124 Stat. 1376, (H.R. 4173), July 21, 2010.

requires that the institution's board of directors develop, adopt, and maintain a policy for providing timely notices to shareholders. In doing so, we believe we address comments made regarding personnel events listed in the proposed rule. At a minimum, the policy must:

- Identify the types of significant or material events affecting the institution's operations, management, etc. to be communicated to shareholders; [22] and
- Discuss how the institution will determine materiality and significance.

We expect the policy to provide sufficient guidance to ensure consistent reporting in notices of similar events. Also, the final rule adopts at § 620.15(e) the suggestion by some commenters that the FCA retain the authority to require a notice when it determines there has been a significant or material event.

Institutions should consider the following when identifying material and significant events:

- Changes to compensation, incentive, performance, or retirement and benefit plans;
- Changes to institution capitalization bylaws;
- Results of shareholder votes;
- Early director departures and departures of senior officers; [23]
- Letters of intent to merge;
- A change in the external auditor engaged to audit the institution's financial statements;
- A change in an external party engaged to perform internal audit functions, if the change was due to a disagreement with the party over the results or findings from the work performed; and
- Reportable FCA supervisory and enforcement actions.

The final rule requires that, at a minimum, this part of the policy include the events that would be covered under the existing definitions for ''material'' and ''significant'' contained in § 620.1. One commenter stated the definitions of ''material'' and ''significant'' in § 620.1(h) and (q) are vague and subjective. We do not agree that the § 620.1 definitions are vague or overly subjective. The definitions have been used by institutions for years in preparing financial reports and are intended to provide some flexibility and discretion in identifying material and significant events. This flexibility is necessary to accommodate variations in institution operations.

Commenters expressed dislike for the requirement to place the notice on the first page of the quarterly report, if the quarterly report is used to communicate the event. They noted that the disclosure should be placed in the report where required by GAAP. The rule does not necessarily require that the notice be reported on the first page of the quarterly report. However, the rule requires that the notice be included at the beginning (i.e., in the opening section) of the quarterly report, that it be conspicuous, and that it not be included in a footnote. We continue to believe such events should be prominently disclosed and not marginalized. We clarify that if GAAP prescribes where a particular disclosure should be reported, then prominent disclosure would be made as required by this regulation, but with reference to the detailed GAAP disclosure. The final rule retains the requirement that, if the quarterly report is used to issue the notice, the notice must be prominently disclosed at the beginning of the report.

The rule requires that the notice be issued as soon as possible, but not later than 90 days after the event occurs. Commenters requested clarification when using the quarterly report for notice if the event occurred soon after a quarterly report is issued, requesting that the 90-day time limit be eliminated in those cases. One commenter requested that the notice be issued solely in the institution's quarterly report (or annual report for fourth quarterly period reporting). Others asked to use an institution's Web site for these notices.

As previously discussed, the proposed rule provided that the notice could be issued by posting to the institution's Web site,[24] by reporting in the quarterly report, or by any means with wide enough circulation to reasonably assure that all institution shareholders have access to the information. Given the variety of means available to issue the notice, we are not persuaded that any delay in issuing the notice, including for convenience, is warranted. We continue to believe that communication of significant or material events is important to shareholders and should be communicated in a timely manner, especially given the various means by which the institution may communicate the event. We do not believe that a 90-day requirement is an unnecessary burden on institutions or that communication will cause it to incur significant costs.[25]

Also, we do not believe that limiting distribution of the notice to the quarterly report is sufficient. Quarterly reports traditionally only update financial information in the annual report. As explained, the purpose of the notice is timely communication of material and significant events occurring between annual reporting periods and which may not be financial events. We believe that using other means to issue the notice, such as a Web site posting, facilitates access to the notice by shareholders and investors. Therefore, if the event occurs a few days after the quarterly report is issued, institutions may have to use an alternative distribution method for the notice.

The proposed rule included a statement in § 620.11(d) that notices made part of a quarterly report must comply with both quarterly reporting requirements and the notice requirements of § 620.15. Comments were made regarding the potential complications of satisfying GAAP reporting requirements and the notice requirements. We included this statement in § 620.11(d) to clarify that the notice, no matter how it is communicated to the shareholders, must satisfy the provisions of § 620.15. Since the requirement raised questions on compliance with GAAP for the quarterly report, the final rule removes the statement from § 620.11(d) and places it in § 620.15(b)(2). We believe this change clarifies that the notice does not affect GAAP and other quarterly reporting requirements contained in § 620.11. We made technical changes to § 620.15 in the final rule to accommodate these changes.

We received few comments on the proposed consolidation into § 620.17 of the existing requirements for special notices on permanent capital. Those few comments received questioned the need for the consolidation, which we feel was adequately explained in the proposed rule preamble. The consolidation was a technical change and not substantive, designed to enhance the clarity and use

[22] In identifying matters of importance to shareholder decisions, we refer institutions to the objective of section 1.1(b) of the Act, which encourages member-borrower participation in the management, control, and ownership of their institution.

[23] As considered appropriate and relevant by the board, disclosure may or may not include the reason for the departure of a director prior to the end of his or her term of office or for the departure of a senior officer. For example, the planned departure of a senior officer may not rise to the level of materiality or significance to require notice if the departure was part of an institution's established succession plan.

[24] This includes an association using a funding bank's Web site, if it routinely uses its funding bank's Web site to communicate with its shareholders.

[25] Unless our rules specify ''business days'', any use of the term ''days'' means calendar days. The final rule states the notice is due within 90 days, so that would be 90 calendar days, not business days as some commenters stated.

of the rule. Therefore, we finalize the consolidation of our rules on special notices for permanent capital into § 620.17 as proposed.

5. Non-binding, Advisory Vote by Shareholders on Senior Officer Compensation [§§ 611.100, 620.5(a)(11) and 630.20(i); new §§ 611.360, 611.410 and 620.6(c)(6)]

We proposed requiring Farm Credit banks and associations provide shareholders the opportunity to cast a non-binding, advisory vote on senior officer compensation. The vote would be required if either the CEO's or the aggregate of all other senior officers' compensation, as disclosed in the Compensation Table, increased or decreased by 15 percent or more from the previous reporting period. We also proposed authority for association shareholders to petition for the vote at any time.

All commenters strongly objected to the non-binding advisory vote and asked that it be withdrawn. Most commenters claimed we were applying the Dodd-Frank Act to the System, a law they state ''Congress specifically chose not to apply to the System.'' Commenters added that System institutions do not compensate staff with stock or stock options. They stated that compensation in the form of stock options led to the financial crisis of 2008 for commercial lenders and was a key motivator for Congress when adding section 951 of the Dodd-Frank Act. Section 951 of the Dodd-Frank Act requires, in part, that publicly traded companies hold separate non-binding shareholder advisory votes on the compensation of executives at least every 3 years. Section 951 also provides that shareholders must vote at least every 6 years on whether to hold the advisory votes on compensation every 1, 2 or 3 years.

Most commenters expressed a view that advisory votes do not further cooperative principles or promote the safety and soundness of the System and would have a negative impact on the cooperative business model. Several comments focused on the member-controlled board of directors, citing that members can elect or remove directors. Commenters also questioned whether holding an advisory vote was a ''best practice'' for cooperative institutions. Commenters stated that the vote was a referendum on an institution's board decisions and would result in undermining the discretion and decision-making authority of the board and the compensation committee. Some added that advisory votes would replace existing effective ''engagement mechanisms'' and dilute shareholders' messages to directors. Still others stated that it is an unfair expectation of the membership, going so far as to state that members did not want a vote on their institution's compensation practices. One commenter added that an advisory vote would not reflect risk assessment or market practices. Commenters asserted that each shareholder would have a personal view on what is reasonable compensation, making it difficult for the institution to use the ''feedback'' from the vote or translate it into a practical recommendation to improve compensation practices. Commenters added that even with enhanced compensation disclosures, shareholders would not have the same level of detailed information or access to confidential information used by the board in reaching compensation decisions. They asserted that the votes would have to be unanimous to avoid shareholder dissatisfaction or lawsuits. Commenters stated that advisory votes could dilute voter participation in other matters, including director elections, and that shareholders might view the cost of conducting advisory votes as a misuse of funds. One commenter estimated the cost of a single advisory vote at $30,000. Commenters also pointed out the potential for little or no shareholder response on advisory votes, making the effort a waste of resources.

We are not withdrawing the requirement for a non-binding advisory vote on compensation, but are including this provision in the final rule with certain changes. Further, in the proposed rule preamble, we did not reference the Dodd-Frank Act because its provisions on compensation practices and disclosures do not apply to the System. While the Dodd-Frank Act introduced the advisory, non-binding vote to the corporate community at large, it does not have exclusive jurisdiction over the use of such a vote. In addition, the Dodd-Frank Act did not prohibit the use of advisory voting by the System, nor does it prevent us from regulating the use of non-binding, advisory votes. As stated in FCA–PS–59, our rulemaking efforts seek to further the public policy mission of the System, which includes promoting shareholder involvement in the management, control, and use of the System. As with other laws not directly involving the System, we consider the goals and objectives of those laws for applicability to the System. The Dodd-Frank Act strives, in part, to address compensation excesses by increasing director accountability and shareholder involvement. It is true that the System did not play a role in the activities that led to the 2008 financial crisis, which in turn led to passage of the Dodd-Frank Act. However, as a GSE operating as cooperatives, System institutions should continually strive to operate under high standards. Each institution must be accountable to its shareholders and should embrace alternative venues for shareholder involvement in the management and control of the institution.

We explained in the proposed rule preamble that the non-binding advisory vote was another tool for institutions to use in the continuous effort to operate under high standards and to further the System's public policy mission, as well as encourage member-owner participation. As such, we believe drawing the shareholders' attention to a matter through advisory voting is relevant to the core principle of System institutions being member-owned. We do not envision the vote requiring shareholders to have access to extensive or confidential compensation information. We believe institutions can provide shareholders with the necessary information in order that shareholders may judge whether compensation or compensation changes are justified and acceptable. The board may then use that feedback in making compensation decisions. Therefore, the feedback should enhance, rather than undermine, board decision making. We also believe that the cost of conducting the vote will not be burdensome since the vote is required only if a material increase in compensation occurs or if the voting shareholders petition for the vote.

Several commenters also raised the issue of fiduciary duty, explaining an advisory vote is not a good exercise of prudent business judgment. Commenters stated advisory votes also undermine the responsibility and accountability of the compensation committee. We do not agree with these comments and continue to believe that advisory votes are consistent with a board's fiduciary duties of care, loyalty, and obedience, which require directors to investigate, review, monitor, and take corrective action when necessary. Boards are often presented with conflicting information and have to weigh the information and its source before making decisions. The result of prior advisory votes is information that should be considered by the board when reviewing or developing compensation plans. As a result, fiduciary duties require consideration of, not strict adherence to, the advisory vote results. As such, we see no fiduciary interference in holding advisory votes. Instead, we believe the votes advance

the special fiduciary duty of cooperative boards to be accountable to shareholders as well as local, State, and Federal government authorities.

Commenters remarked that section 951 of the Dodd-Frank Act does not reference increasing shareholder participation, the reason given in the FCA proposed rule for an advisory vote. Commenters challenged our statutory basis for the advisory vote, arguing that section 1.1(b) of the Act does not authorize the FCA to regulate communications between shareholders and their institutions. Other commenters added that the FCA has not shown there are existing deficiencies in shareholder communication or participation to support the requirement.

As we stated earlier, we are not limited to issuing regulations only when there is a deficiency in institution operations. Section 1.1(b) of the Act states that the objective of the Act is to ''continue to encourage farmer- and rancher-borrowers participation in the management, control, and ownership of a permanent system of credit for agriculture.'' [26] Further, Congress reiterated in the 1992 Act the need for shareholder awareness and involvement in the compensation practices of their institutions. Specifically, the 1992 Act states one purpose of enhanced compensation disclosures is to assist shareholders in managing their cooperatives. We do not believe an advisory vote regulates communications, but rather provides another tool for shareholders to participate in the management of their institutions. We recognize that the election of the board of directors by members has been the primary means for member participation in the management of their institution. However, we do not believe that it need be the only tool for shareholder participation.

Other commenters suggested we require a compensation expert on the board of directors or require disclosure of the reason for compensation changes instead of a vote. For the reasons stated above, we continue to believe an advisory vote on compensation is valuable, notwithstanding these suggestions. We encourage institutions to consider these suggestions for their operations, but are not requiring such at this time.

A few commenters asked why the vote would be non-binding and limited to senior officer compensation if the objective is to increase member participation. We believe that a non-binding vote, as opposed to a binding vote, will provide meaningful feedback to the board of directors while also allowing the board to use that feedback in the manner it considers most appropriate. The nature of a binding vote would require a definite action by the board. Also, we require the vote solely on the CEO and other senior officer compensation because it is those employees who make the decisions, or provide information for the board to make decisions, on institution policy, strategic direction and operations. However, institutions are not prohibited from seeking shareholder input on compensation in ways other than holding a non-binding vote nor does it limit the shareholder votes solely to CEO and other senior officer compensation. We encourage institutions to expand shareholder votes as they consider appropriate.

Other commenters pointed out that several financial regulators chose not to extend a Dodd-Frank Act type of mandatory advisory vote to their regulated entities not already subject to it. We also chose not to impose the Dodd-Frank Act style advisory vote on System institutions. Instead, we determined that material increases in compensation or the desire of the voting shareholders should determine if a vote is required.

One commenter suggested that if the vote is required it should be based on cash compensation instead of all compensation. The commenter explained that it would be unfair to have a vote on compensation changes that are beyond the control of the institution or employee, such as changes in investment values of retirement plans. We do not agree that an advisory vote on compensation should be limited to cash outlays. Shareholders should be able to express support or disagreement with all components of compensation. However, we agree that changes in pension value may be unrelated to compensation earned or paid and should not be included in the calculation of the increase. The final rule at § 611.410(b)(1) explains that the calculation of compensation increases does not include changes in pension value. We also clarify that the compensation subject to the vote is that reported under the provisions of § 620.6(c)(3).

a. Advisory Votes Based on Increase in Compensation

A few commenters stated that 15 percent is an arbitrary threshold. We do not agree. We selected 15 percent as a threshold based on our review of reported compensation changes within the System that looked at recent percentage changes to bank and association CEOs' and other senior officers' compensation. We chose a threshold that was equal to or exceeded the olympic average [27] of percent changes for the 3 years observed to reflect what may be, in a given year, a significant increase. The olympic average indicated that 15 percent was a material increase, an unusual and infrequent occurrence and, therefore, an advisory vote triggered by the 15-percent increase should not be a recurring burden on System institutions.

Still others suggested an advisory vote triggered by a percentage change in reported compensation could result in a vote on the institution's performance when most of the compensation change is due to incentive pay programs. We agree with the comments that an advisory vote on compensation changes may be viewed as providing shareholder feedback on the overall performance of the institution. As we have explained, the compensation committee should be reviewing incentive and performance-based compensation programs to ensure they support the overall positive performance of the institution and discuss the relationship between compensation and performance in accordance with new § 620.6(c)(5).

Commenters expressed concern with the burden and complexity involved in holding advisory votes based on compensation changes of 15 percent or more for the aggregate group. Some explained the inclusion of highly compensated employees in the aggregate group could lead to a 15-percent overall increase, and therefore a vote, when there was no corresponding change in senior officer pay. We agree that including highly compensated employees in the 15-percent calculation for the aggregate group may unnecessarily trigger a vote on all senior officer compensation included in the aggregate amount. We did not intend to trigger a vote strictly due to changes in pay from commission activities for highly compensated employees. We recognize incentive pay for increased lending and related services activities may place employees who are not involved in the institution's decision-making processes in the aggregate group. The final rule at § 611.410(b)(2) provides that the compensation of highly compensated employees, who are not senior officers, may be removed from the aggregate senior officer compensation before calculating compensation increases to determine if

[26] 12 U.S.C. 2001.

[27] An Olympic average is the average removing the high and low values.

an advisory vote is required. The rule also clarifies that a separate vote is held if the reported compensation for the CEO, individually, or other senior officers, in the aggregate, as defined in § 619.9310, meets or exceeds 15 percent from the previous fiscal year. That is, compensation increases for the CEO is subject to its own advisory vote, notwithstanding what occurs to the compensation of the aggregate group.

When proposing the advisory vote on compensation, we used the CEO and aggregate group because that data is disclosed in the Compensation Table. The final rule does not require the vote on senior officers in the aggregate to include highly compensated employees whose compensation is reported in the aggregate group but who are not considered senior officers. Therefore, if these employees' compensation is reported in the aggregate group, institutions should discuss in the voting material that the vote is solely on the compensation increase of senior officers (excluding the CEO) and not the compensation of the entire aggregate group as may be disclosed in the Compensation Table.

Institutions should also ensure the voting information provided to shareholders is meaningful and relevant and facilitates the shareholder's decision. In this rulemaking, we did not propose that senior officer compensation, excluding CEO compensation, be disclosed in the Compensation Table by individual. However, institutions may make such individual disclosures without being in conflict with our regulations. We may reconsider the appropriateness of aggregate reporting in a future rulemaking, but currently have retained our aggregate reporting requirements. We emphasize the importance of providing complete and clear information to shareholders on senior officer compensation. Transparent disclosure allows them to make informed decisions on compensation.

One commenter noted that requiring an advisory vote due to a 15-percent threshold change may have the unintended consequence of causing compensation committees to discontinue or significantly limit the use of performance-based incentives as part of executive compensation plans in order to avoid a vote. Other commenters stated that the 15-percent threshold may actually lead to inflation of executive compensation over time, as well as compensation plans which are less impacted by overall association performance. They noted that the board could elect to shift a greater share of total compensation from ''at-risk'' variable performance to base pay in order to avoid triggering a vote.

Common law fiduciary duties prohibit directors from seeking to avoid compliance with our rules. The compensation committee has final authority over the compensation plans and practices of its institutions. Also, its responsibilities include those discussed in our rules, including the enhancements made in this rulemaking. Our rules require that:

- Compensation committees determine and document the performance of its duties related to incentive-based compensation programs;
- Programs are reasonable and proportionate to the services performed;
- Payout schedules consider the potential for future losses or undue risks to the institution; and
- Programs support the institution's long-term business strategy, as well as promote safe and sound business practices.

Also, our rules require compensation committees to act responsibly and in the best interest of the institution when making compensation decisions. We remind compensation committees of their duty to the safety and soundness of the institution. Further, manipulation of performance-based incentives solely for the purpose of avoiding a vote would be difficult to justify upon examination by the FCA.

A few commenters stated that CEO compensation increases may easily exceed the 15-percent threshold, especially when there is a change in the CEO during the reporting year. Section 611.410(b)(3) provides that institutions will not be required to hold an advisory vote when compensation increases 15 percent or more and results from either a change in personnel or an increase in the number of senior officer positions included in the aggregate group. Other commenters questioned the value of holding the vote when compensation decreased. We agree with the comments that a vote on decreases in compensation is unnecessary and we are not finalizing that requirement.

b. Advisory Votes Based on Petitions

We proposed that associations hold advisory votes if 5 percent of the institution's voting shareholders petition for the vote. One commenter objected to the petition component of the rule explaining that, without a link between the authority to petition and impropriety in compensation practices, a petition could be initiated at-will and by a low percentage of shareholders, creating a nuisance to the institution. Commenters suggested that institution bylaws, which provide for shareholder petitions for special meetings, are sufficient to address any compensation concerns. We do not agree that a shareholder advisory vote resulting from a petition is either improper or a nuisance. Institutions have a duty to provide shareholders opportunities to voice concerns and petitioning for advisory votes is such an opportunity.

Commenters noted that institutions currently employ ''engagement mechanisms'' by which shareholders may express their opinions to the board. Those mechanisms are generally structured or planned by the institution's management. In contrast, petition authority gives shareholders the ability to initiate the process and express their opinion on compensation through an advisory vote. Also, in response to other matters, commenters noted that most institution bylaws provide petition authority to shareholders to call a special meeting. While we believe institutions recognize the value of shareholder-controlled engagement at their cooperatives, commenters did not discuss the percentage of shareholder signatures required to petition under these authorities. Percentage requirements may vary among institutions and, in some cases, may even exceed average voter turnout. Therefore, we believe a regulatory provision on shareholder petition authority for an advisory vote on compensation is a more effective mechanism for allowing shareholders to express their opinion, if they so desire.

The final rule at § 611.410(c) retains the requirement that associations hold an advisory vote if petitioned by 5 percent of their voting shareholders. Since the final rule does not require highly compensated employees who are not senior officers to be included in the calculation of the 15-percent increase or to be subject to the vote, the final rule makes a corresponding change to the petition provision for advisory votes.

c. Advisory Voting Procedures

Commenters requested guidance on when advisory votes are held, explaining there appears to be several opportunities for a vote. They remarked that it is unclear if compensation committees are to delay work until the receipt of advisory vote results. One commenter specifically suggested that votes be tied to annual reports to limit the vote to once a year. Another commenter asked if a record date of shareholders eligible to vote would be required for advisory votes as it is for director elections. One commenter asked how to conduct the votes, stating

their institution only holds in-person voting.

In § 611.360 of the final rule, we clarify that institutions are expected to have policies and procedures to implement advisory voting. When we proposed the rule, we envisioned the advisory vote being held in conjunction with the annual meeting or director elections, absent a shareholder petition for the vote. This process would reduce costs and allow the use of the same stockholder record list for all voting activities. We also envisioned that shareholders would vote ''yes'' or ''no'' on CEO and other senior officer compensation changes. Shareholders would base their vote on compensation disclosures provided by the institution or through discussions with the board. However, we did not propose regulations limiting the vote in this manner, nor does the final rule contain any.

The final rule provides institutions with the flexibility to determine when and how advisory votes occur. The final rule requires institutions to address such matters by adopting and maintaining written policies and procedures. However, the final rule includes a requirement in § 611.360(a)(1)(i) that an advisory vote on compensation triggered because of a 15-percent increase in compensation from the previous fiscal period must occur within 12 months after the fiscal period in which the increase occurred. This timeframe allows the institution to provide for the vote at annual meetings or in conjunction with director elections, thereby reducing the cost to the institution. Also, it ensures that results of the vote are available for disclosure in the next annual report.

The final rule at § 611.360(a)(1)(ii) makes clear that the institution's policies and procedures must identify if votes will be conducted in-person, by proxy, or by mail. Institutions may choose any combination of these balloting methods under the final rule. While not addressed in the regulatory text, we expect compensation committees or the board to document how it used the vote results and its reasoning. We also expect institutions to follow normal voting procedures by setting a record date list of voting shareholders.

Commenters stated that the subject matters of the advisory vote are not specified in the rule, expressing concern at opening advisory votes to more than compensation matters. One commenter had no objection to advisory votes covering more than compensation, and that advisory votes should be determined by policies at each institution, including the subject, timing, and manner of the advisory vote. Another commenter objected to requiring policies on advisory votes of any kind. Since the rule only requires an advisory vote on senior officer compensation, the final rule removes the proposed requirement to identify subject matters of advisory votes. Likewise, the final rule revises the definition of advisory votes at § 611.100(a) to remove the reference to compensation practices.

One commenter objected to providing advisory votes at banks on a one-member, one-vote basis instead of allowing weighted and cumulative voting. The commenter asserted that giving equal voice to a Farm Credit bank's shareholders is contrary to cooperative principles. Conversely, a few commenters expressed concern that one bank shareholder could control the vote's ''message'' sent to the funding bank if weighted voting was used. We do not believe that requiring non-binding, advisory votes be cast on a one-member, one-vote basis is contrary to cooperative principles. We proposed that all advisory votes be cast on a one-member, one-vote basis, with no weighted or cumulative voting allowed. This provision ensures that all bank shareholders, regardless of asset size or the size of membership, have an equal voice on the compensation matter. We finalize in § 611.360(c) the requirement that advisory votes be cast on a one-member, one-vote basis.

A few commenters asserted that an advisory vote would be harmful to the lender-borrower structure of the System. They stated that giving members direct influence over the compensation of the managers administering member loans was inappropriate. Some commenters stated that institution management could take retribution against shareholders if the vote resulted in a decrease in pay. The rule at § 611.360(b) requires all advisory votes to be treated under the confidentiality and security in voting rules at § 611.340. The confidentiality of the vote resolves many of the concerns raised, including those questioning the likelihood of retaliation, undue influence, or improper lender-borrower actions. Applying the confidentiality voting provisions of § 611.340 to advisory votes ensures that only the results of the vote will be reviewed by the board and management, not the identity of the voter. Further, existing conflicts of interest rules prohibit directors, officers, and employees from inappropriately seeking to influence votes or retaliate against the voter.

Comments regarding the funding bank relationship raised the concern of retaliation, asserting that bank senior officers would not treat member-associations fairly if those same associations voted on their compensation. We believe that associations face this same accountability to member shareholders and this accountability is a core cooperative principle. We continue to believe confidential advisory votes, cast using a one-member one-vote scheme, provide accountability to the member-owners, while protecting members from retaliatory actions.

d. Reporting and Disclosure of Advisory Votes

Commenters requested clarification regarding the timing of disclosures on the results of advisory votes. Another commenter asked if the disclosure requirement included the cost of conducting the advisory vote. The rule provides flexibility to the institution in that it does not require and does not prohibit disclosure of the cost of the vote. The final rule at § 611.360(d) clarifies that reporting advisory votes is required only if an advisory vote was held during the fiscal period covered by the annual report. Also, reporting of advisory votes may be required in accordance with policies adopted by the board to comply with the new § 620.15 disclosure requirements for notices to shareholders. Institution boards should consider if the results of the vote would be a material or significant event that would require reporting to shareholders in a § 620.15 notice.

To facilitate clarity, the final rule removes redundancies in the disclosure and reporting requirements for advisory votes. The final rule consolidates the disclosure of advisory votes in the annual report into § 620.5(a)(11). The rule also clarifies that disclosures are required only if advisory votes are held during the reporting period. Those disclosures must include the types and results of the votes, and if the vote occurred due to a petition request. The rule retains the requirement to disclose to shareholders their authority to petition for an advisory vote in § 620.6(c)(6), but requires a cross-reference to the disclosures made under § 620.5(a)(11), if any. The rule finalizes as proposed the advisory vote disclosure requirements in § 630.20 for the System-wide report to investors.

6. Disclosure of Supplemental Retirement Plans to Employees [§ 620.5(e)]

In new § 620.5(e)(4), we proposed requiring disclosures of an institution's

obligations and other information for SRPs provided to all employees, excluding the CEO and other senior officers whose benefits would be reported in the Pension Benefits Table. The proposed disclosures were to include a description of the plans, the funded and unfunded obligations of the plans, and the vested and unvested dollar amounts of the plans.

Commenters expressed support for the requirement to report funded and unfunded amounts of SRP liabilities, but requested that we not require the disclosure of vested and unvested amounts for SERPs and SRPs citing GAAP considerations. Other commenters explained that GAAP only requires reporting of the present value of earned benefits, as of the reporting date. These commenters explained that the proposed requirement might result in reporting potential benefits, a speculative process that could only harm shareholders' understanding and trust of the disclosure. Some commenters stated support for reporting vested and unvested amounts in § 620.5(e)(4) as long as it was done in total and aggregated for all plans.

In finalizing the rule, we revised this section to be consistent with the changes we are making to the reporting of SERPs. The final rule on SRP disclosures allows aggregate reporting for all SRPs, including SERPs provided to senior officers and disclosed in the Pension Benefits Table. With this change, shareholders will be able to compare the total amount(s) reported in § 620.5(e)(4) with the data reported in the Pension Benefit Table, enabling shareholders to identify the proportionate liability of SRPs and SERPs for the CEO and aggregate group. The SRP disclosures must include the name(s) of the plan(s), present value of accumulated benefits, funded and unfunded obligations, and payments made during the year.

A few commenters asked how to determine the ''funded'' amount for § 620.5(e)(4), asking if the amount was based on the entire plan, the Rabbi Trust supporting the SERP or something else. In discussing such plans, the institution should include a discussion of funding from whatever source and any other disclosures that the institution believes would be appropriate in order to provide clarity and facilitate an understanding of the information presented.

We are finalizing the requirement to disclose off-balance sheet commitments, such as benefits earned but not yet vested. The requirement is located in this section instead of the proposed requirement to disclose it with the Pension Benefits Table in conformance with comments received.

7. Miscellaneous [§§ 611.330(c), 611.400, 620.2(c) & (d), 620.4(c), 620.10(c) and 620.11]

In the process of consolidating provisions, some regulatory language was proposed to be changed to remove redundancy and enhance clarity. We received no comments on these miscellaneous technical changes and, except for § 620.2(c), final those provisions as proposed. In § 620.2(c) we proposed clarifying the language regarding the electronic delivery of reports to shareholders. We received no comments on the proposed clarification, but we are making grammatical corrections to the language in the final rule. The final language continues to state that electronic distribution of reports may only occur with shareholder consent and that the provision applies only to those reports individually sent to shareholders, not all reports.

C. Compliance Date

All provisions of this rule require compliance on the effective date except the provision of § 611.410(b) requiring advisory votes for increases in senior officer compensation of 15 percent or more. Advisory votes on increases of 15 percent or more in CEO or the aggregate of other senior officers' compensation are not required until 2014. We believe delaying compliance minimizes the potential for variations in implementation of the vote by establishing the compensation reported in the 2012 annual report as the ''base line'' from which initial compensation increases are measured. Therefore, an advisory vote would be required in 2014 if the CEO's or other senior officers' compensation increased by 15 percent or more in fiscal 2013 compared to fiscal 2012. Results of the advisory vote on increases in compensation would then be disclosed in the 2014 annual report and possibly in an interim notice under § 620.15.

We are not delaying compliance in holding advisory votes resulting from shareholder petitions. Petitions for advisory votes are not tied to a specific report or disclosure, so establishment of a baseline is unnecessary. Further, shareholders can currently petition their institution for special elections or special meetings. Policies and procedures are in place at institutions to facilitate these petitions. This familiarity with petition procedures also negates a need for delayed compliance.

IV. Regulatory Flexibility Act

Pursuant to section 605(b) of the Regulatory Flexibility Act (5 U.S.C. 601 *et seq.*), the FCA hereby certifies that the final rule would not have a significant economic impact on a substantial number of small entities. Each of the banks in the Farm Credit System, considered together with its affiliated associations, has assets and annual income in excess of the amounts that would qualify them as small entities. Therefore, Farm Credit System institutions are not ''small entities'' as defined in the Regulatory Flexibility Act.

List of Subjects

12 CFR Part 611

Agriculture, Banks, banking, Rural areas.

12 CFR Part 612

Agriculture, Banks, banking, Conflict of interests, Crime, Investigations, Rural areas.

12 CFR Part 619

Agriculture, Banks, banking, Rural areas.

12 CFR Part 620

Accounting, Agriculture, Banks, banking, Reporting and recordkeeping requirements, Rural areas.

12 CFR Part 630

Accounting, Agriculture, Banks, banking, Organization and functions (Government agencies), Reporting and recordkeeping requirements, Rural areas.

For the reasons stated in the preamble, parts 611, 612, 619, 620, and 630 of chapter VI, title 12 of the Code of Federal Regulations are amended as follows:

PART 611—ORGANIZATION

■ 1. The authority citation for part 611 is revised to read as follows:

Authority: Secs. 1.2, 1.3, 1.4, 1.5, 1.13, 2.0, 2.1, 2.2, 2.10, 2.11, 2.12, 3.0, 3.1, 3.2, 3.21, 4.12, 4.12A, 4.15, 4.20, 4.21, 5.9, 5.17, 6.9, 6.26, 7.0–7.13, 8.5(e) of the Farm Credit Act (12 U.S.C. 2002, 2011, 2012, 2013, 2021, 2071, 2072, 2073, 2091, 2092, 2093, 2121, 2122, 2123, 2142, 2183, 2184, 2203, 2208, 2209, 2243, 2252, 2278a–9, 2278b–6, 2279a–2279f–1, 2279aa–5(e)); secs. 411 and 412 of Pub. L. 100–233, 101 Stat. 1568, 1638; sec. 414 of Pub. L. 100–399, 102 Stat. 989, 1004.

■ 2. Section 611.100 is amended by:

■ a. Redesignating paragraphs (a) through (f) as paragraphs (c) through (h), respectively; and

■ b. Adding new paragraphs (a) and (b) to read as follows:

§ 611.100 Definitions.

* * * * *

(a) *Advisory vote* means a non-binding vote by the voting stockholders on certain events of the institution.

(b) *Business day* means a day the institution is open for business, excluding the legal public holidays identified in 5 U.S.C. 6103(a).

* * * * *

§ 611.330 [Amended]

■ 3. Section 611.330 is amended by:

■ a. Removing the reference ''§ 620.5(j) and (k)'' and adding in its place, the reference, ''§ 620.6(e) and (f)'' in the first sentence of paragraphs (b)(1) and (b)(2); and

■ b. Adding the words ''in accordance with § 620.21(b) of this chapter'' to the end of paragraph (c)(1).

■ 4. A new § 611.360 is added to subpart C to read as follows:

§ 611.360 Advisory votes.

(a) Each Farm Credit bank and association must establish and maintain written policies and procedures to implement advisory votes. Advisory votes must be held in accordance with the policies and procedures, which, at a minimum, must:

(1) Establish the timing, manner, and notice of the vote.

(i) Votes held due to a 15-percent or more increase in compensation must occur within 12 months after the fiscal year end in which the increase occurred.

(ii) Votes may be conducted in-person, by proxy, by mail, or any combination thereof.

(iii) If the vote will be held in connection with an annual meeting or director elections, notice of the advisory vote must be part of the Annual Meeting Information Statement, pursuant to § 620.21(d) of this chapter.

(2) If an association, explain the process for petitioning for an advisory vote. Associations must allow stockholders to petition for advisory votes on senior officer compensation under § 611.410.

(3) If a Farm Credit bank that allows stockholders to petition for advisory votes, explain the process for petitioning for an advisory vote.

(b) Advisory votes are subject to the requirements of § 611.340 and the provisions of section 4.20 of the Act (12 U.S.C. 2208).

(c) Advisory votes must be cast using a ''one-member, one-vote'' voting scheme and are not subject to the provisions in § 615.5230 of this chapter regarding weighted, cumulative, and other voting schemes.

(d) Each Farm Credit bank and association must make the disclosures required by § 620.5(a)(11) of this chapter for advisory votes held during the annual reporting period.

Subpart D—Compensation Practices of Farm Credit Banks and Associations

■ 5. Revise the heading of subpart D to read as set forth above.

§ 611.400 [Amended]

■ 6. Section 611.400 is amended by:

■ a. Removing the words ''Farm Credit System banks'' and adding in their place ''Farm Credit banks'' in paragraph (a);

■ b. Removing the words ''distribute a bookletter to all FCS banks that communicates'' and adding in their place the word ''communicate'' in the last sentence of paragraph (b).

■ c. Removing the words ''Farm Credit System bank'' and adding in their place ''Farm Credit bank'' in paragraph (d)(1); and

■ 7. A new § 611.410 is added to subpart D to read as follows:

§ 611.410 Advisory votes on senior officer compensation.

(a) Farm Credit banks and associations must hold advisory votes on the compensation for all senior officers meeting the definition of § 619.9310 of this chapter and the requirements of paragraphs (b) and (c) of this section. Stockholders must be allowed to cast an advisory vote on the compensation of the chief executive officer that is separate from the advisory vote on other senior officer compensation. Advisory votes on compensation must be held in accordance with the policies and procedures established under § 611.360.

(b) If compensation, as reported in the most recent annual report, for either the chief executive officer or the aggregate senior officer group increased 15 percent or more from the previous reporting period, the Farm Credit bank or association must hold an advisory vote.

(1) All compensation reported in the Compensation Table of the annual report (or the annual meeting information statement), except changes in pension benefits value reported under § 620.6(c)(3)(iii)(D) of this chapter, must be included in the calculation to determine if an increase of 15 percent or more occurred in reported compensation amounts.

(2) Compensation of employees reported in the Compensation Table of the annual report (or the annual meeting information statement) pursuant to § 620.6(c)(2)(i) of this chapter may be excluded when determining if an increase of 15 percent or more occurred.

(3) No advisory vote is required if the 15 percent or more increase in compensation is solely because of a change during the reporting period in the senior officers included in the aggregate or the chief executive officer.

(c) Each association must hold an advisory vote on senior officer compensation when 5 percent of the voting stockholders petition for the vote.

(1) Stockholders may petition for an advisory vote on the compensation of the chief executive officer, the aggregate senior officer group, or both.

(2) Employees reported in the Compensation Table of the annual report (or the annual meeting information statement) pursuant to § 620.6(c)(2)(i) of this chapter may be excluded when holding a vote by petition.

(3) The association must disclose the petition authority in the annual report to shareholders pursuant to § 620.6(c)(6) of this chapter.

PART 612—STANDARDS OF CONDUCT AND REFERRAL OF KNOWN OR SUSPECTED CRIMINAL VIOLATIONS

■ 8. The authority citation for part 612 continues to read as follows:

Authority: Secs. 5.9, 5.17, 5.19 of the Farm Credit Act (12 U.S.C. 2243, 2252, 2254).

§ 612.2145 [Amended]

■ 9. Section 612.2145 is amended by removing the reference ''§ 620.5(k)'' and adding in its place, the reference ''§ 620.6 (f)'' in paragraph (a)(2).

§ 612.2155 [Amended]

■ 10. Section 612.2155 is amended by removing the reference ''§ 620.5(k)'' and adding in its place, the reference ''§ 620.6(f)'' in paragraph (a)(2).

§ 612.2165 [Amended]

■ 11. Section 612.2165 is amended by removing the reference ''§ 620.5'' and adding in its place ''§§ 620.5 and 620.6'' in paragraph (b)(12).

PART 619—DEFINITIONS

■ 12. The authority citation for part 619 is revised to read as follows:

Authority: Secs. 1.4, 1.5, 1.7, 2.1, 2.2, 2.4, 2.11, 2.12, 3.1, 3.2, 3.21, 4.9, 5.9, 5.17, 5.19, 7.0, 7.1, 7.6, 7.8 and 7.12 of the Farm Credit Act (12 U.S.C. 2012, 2013, 2015, 2072, 2073, 2075, 2092, 2093, 2122, 2123, 2142, 2160, 2243, 2252, 2254, 2279a, 2279a–1, 2279b, 2279c–1, 2279f); sec. 514 of Pub. L. 102–552, 106 Stat. 4102.

■ 13. A new § 619.9335 is added to read as follows:

§ 619.9335 Supplemental retirement plan or supplemental executive retirement plan.

A nonqualified retirement plan that provides benefits in addition to those covered by other retirement plans for all employees and funded in whole or part by a Farm Credit institution.

PART 620—DISCLOSURE TO SHAREHOLDERS

■ 14. The authority citation for part 620 is revised to read as follows:

Authority: Secs. 4.3, 4.3A, 4.19, 5.9, 5.17, 5.19 of the Farm Credit Act (12 U.S.C. 2154, 2154a, 2207, 2243, 2252, 2254); sec. 424 of Pub. L. 100–233, 101 Stat. 1568, 1656; sec. 514 of Pub. L. 102–552, 106 Stat. 4102.

■ 15. Section 620.2 is amended by revising the section heading and paragraphs (c) and (d) to read as follows:

§ 620.2 Preparing and filing reports.

* * * * *

(c) The reports sent to shareholders must comply with the requirements of § 620.3 and electronic delivery of those reports requires shareholder agreement.

(d) Information in any part of a report may be incorporated by reference in answer or partial answer to any other item of the report, unless instructions for the report state otherwise.

* * * * *

■ 16. Section 620.4 is amended by revising paragraph (c) to read as follows:

§ 620.4 Preparing and providing the annual report.

* * * * *

(c) The report must contain, at a minimum, the information required by §§ 620.5 and 620.6. In addition, the report must contain such other information as is necessary to make the required statements, in light of the circumstances under which they are made, not misleading.

■ 17. Section 620.5 is amended by:

■ a. Adding new paragraphs (a)(11) and (e)(4);

■ b. Revising paragraph (h);

■ c. Removing paragraphs (i), (j), and (k); and

■ d. Redesignating existing paragraphs (l), (m), and (n) as paragraphs (i), (j), and (k), respectively.

The additions and revisions read as follows:

§ 620.5 Contents of the annual report to shareholders.

* * * * *

(a) * * *

(11) Any advisory votes held during the reporting period, including the types and results of the votes. If an advisory vote resulted from a shareholder petition, the institution must also discuss the petition.

* * * * *

(e) * * *

(4) Describe supplemental retirement plans funded by the institution on behalf of senior officers and employees. The description for each plan must include the:

(i) Plan name;

(ii) Present value of accumulated benefits;

(iii) Payments made during the reporting period;

(iv) Funded and unfunded obligations; and

(v) Off-balance sheet amounts, including benefits earned but not vested.

* * * * *

(h) *Directors and senior officers.* In a separate section of the annual report, make the disclosures required in § 620.6 of this part.

* * * * *

■ 18. A new § 620.6 is added to subpart B to read as follows:

§ 620.6 Disclosures in the annual report to shareholders relating to directors and senior officers.

(a) *General.* (1) List the names of all directors and senior officers of the institution, indicating the position title and term of office of each director, and the position, title, and date each senior officer commenced employment in his or her current position.

(2) Briefly describe the business experience during the past 5 years of each director and senior officer, including each person's principal occupation and employment during the past 5 years.

(3) For each director and senior officer, list any other business interest where the director or senior officer serves on the board of directors or as a senior officer. Name the position held and state the principal business in which the business is engaged.

(b) *Compensation of directors.* Describe the arrangements under which directors of the institution are compensated for all services as a director (including total cash compensation and noncash compensation). Noncash compensation with an annual aggregate value of less than $5,000 does not have to be reported. State the total cash and reportable noncash compensation paid to all directors as a group during the last fiscal year. For the purposes of this paragraph, disclosure of compensation paid to and days served by directors applies to any director who served in that capacity at any time during the reporting period. If applicable, describe any exceptional circumstances justifying the additional director compensation as authorized by § 611.400(c) of this chapter. For each director, state:

(1) The number of days served at board meetings;

(2) The total number of days served in other official activities, including any board committee(s);

(3) Any additional compensation paid for service on a board committee, naming the committee; and

(4) The total cash and noncash compensation paid to each director during the last fiscal year. Reportable compensation includes cash and the value of noncash items provided by a third party to a director for services rendered by the director on behalf of the reporting Farm Credit institution. Noncash compensation with an annual aggregate value of less than $5,000 does not have to be reported.

(c) *Compensation of senior officers.* Disclose the information on senior officer compensation and compensation plans as required by this paragraph. The institution must disclose the total amount of compensation paid to senior officers in substantially the same manner as the tabular form specified in the Summary Compensation Table (Compensation Table), located in paragraph (c)(3) of this section.

(1) For each of the last 3 completed fiscal years, report the total amount of compensation paid and the amount of each component of compensation paid to the institution's chief executive officer (CEO), naming the individual. If more than one person served in the capacity of CEO during any given fiscal year, individual compensation disclosures must be provided for each CEO.

(2) For each of the last 3 completed fiscal years, report the aggregate amount of compensation paid, and the components of compensation paid, to all senior officers as a group, stating the number of officers in the group without naming them.

(i) If applicable, when any employee who is not a senior officer has annual compensation at a level that is among the five highest paid by the institution during the reporting period, include the highly compensated employee(s) in the aggregate number and amount of compensation reported in the Compensation Table.

(ii) The report containing the aggregate compensation disclosure must include a statement that disclosure of information on the total compensation paid during the last fiscal year to any senior officer, or to any other employee

included in the aggregate, is available and will be disclosed to shareholders of the institution and shareholders of related associations (if applicable) upon request. This statement must be located directly beneath the Compensation Table.

(3) The institution must complete the Compensation Table, or something substantially similar, according to the following instructions:

SUMMARY COMPENSATION TABLE

Annual						
Name of individual or number in group	Year	Salary	Bonus	Deferred/ perquisite	Other	Total
(a)	(b)	(c)	(d)	(e)	(f)	(g)
CEO	20XX 20XX 20XX	$	$	$	$	$
Aggregate No. of Senior Officers (*& other highly compensated employees, if applicable*):						
(X)	20XX					
(X)	20XX					
(X)	20XX					

(i) Amounts shown as ''Salary'' (column (c)) and ''Bonus'' (column (d)) must reflect the dollar value of salary and bonus earned by the senior officer during the fiscal year. Amounts contributed during the fiscal year by the senior officer pursuant to a plan established under section 401(k) of the Internal Revenue Code, or similar plan, must be included in the salary column or bonus column, as appropriate. If the amount of salary or bonus earned during the fiscal year is not calculable by the time the report is prepared, the reporting institution must provide its best estimate of the compensation amount(s) and disclose that fact in a footnote to the table.

(ii) Amounts shown as ''deferred/ perquisites'' (column (e)) must reflect the dollar value of other annual compensation not properly categorized as salary or bonus, including but not limited to:

(A) Deferred compensation earned during the fiscal year, whether or not paid in cash; or

(B) Perquisites and other personal benefits, including the value of noncash items, unless the annual aggregate value of such perquisites is less than $5,000. Reportable perquisites include cash and the value of noncash items provided by a third party to a senior officer for services rendered by the officer on behalf of the reporting institution.

(iii) Compensation amounts reported under the category ''Other'' (column (f)) must reflect the dollar value of all other compensation not properly reportable in any other column. Items reported in this column must be specifically identified and described in a footnote to the table. ''Other'' compensation includes, but is not limited to:

(A) The amount paid to the senior officer pursuant to a plan or arrangement in connection with the resignation, retirement, or termination of such officer's employment with the institution.

(B) The amount of contributions by the institution on behalf of the senior officer to a vested or unvested defined contribution plan unless the plan is made available to all employees on the same basis.

(C) The dollar value of any tax reimbursement provided by the institution.

(D) Any changes in the value of pension benefits.

(iv) Amounts displayed under ''Total'' (column (g)) shall reflect the sum total of amounts reported in columns (c), (d), (e), and (f).

(4) If the institution provides a defined benefit plan or a supplemental executive retirement plan (SERP) to its senior officers, the institution must complete the following Pension Benefits Table, or something substantially similar, for each plan according to the following instructions:

PENSION BENEFITS TABLE

As of most recent fiscal year-end			
Name of individual	Years of credited service	Present value of accumulated benefits	Payments made during reporting period
CEO		$	$
Senior Officers as a Group (*& other highly compensated employees, if applicable*).			

(i) Report the credited years of service for the CEO and the average credited years of service for the senior officer group under the plan.

(ii) Report the present value of accumulated benefits for the CEO and the senior officer group under the plan.

(iii) Report payments made during the reporting period under the plan for the CEO and the senior officer group.

(5) Provide a description of all compensation, retirement, incentive, and performance plans (plans) pursuant to which cash or noncash compensation was paid or distributed during the last fiscal year, or is proposed to be paid or distributed in the future for performance during the last fiscal year, to those individuals included in the Compensation Table. Provide the information individually for the chief executive officer and as a group for the senior officers. Information provided for

the senior officer group includes any highly compensated employees whose compensation is reported in the Compensation Table. The description of each plan must include, but not be limited to:

(i) A summary of how each plan operates and who is covered by the plan. The summary must include the criteria used to determine amounts payable, including any performance formula or measure, as well as the time period over which the measurement of compensation will be determined, payment schedules, and any material amendments to the plan during the last fiscal year.

(ii) The overall risk and reward structure of the plan as it relates to senior officers' compensation. The description must include, at a minimum, how each plan is compatible with and promotes the institution's goals and business strategy and the mission as a Government-sponsored enterprise.

(iii) A discussion of the relationship between the CEO and senior officers' compensation to the reporting institution's overall performance. The disclosure must also discuss the relationship between the CEO's and senior officers' compensation to their performance.

(6) Adjacent to the Compensation Table, discuss the authority of shareholders to petition for an advisory vote on CEO and senior officer compensation. Include a reference to the location in the report where the discussion of any advisory votes held during the reporting period is contained.

(7) Associations may disclose the information required by paragraph (c) of this section in the Annual Meeting Information Statement (AMIS) pursuant to subpart E of this part. Associations exercising this option must include a reference in the annual report stating that the senior officer compensation information is included in the AMIS and that the AMIS is available for public inspection at the reporting association offices pursuant to § 620.2(b).

(d) *Travel, subsistence, and other related expenses.* (1) Briefly describe your policy addressing reimbursements for travel, subsistence, and other related expenses as it applies to directors and senior officers. The report shall include a statement that a copy of the policy is available to shareholders of the institution and shareholders of related associations (if applicable) upon request.

(2) For each of the last 3 fiscal years, state the aggregate amount of reimbursement for travel, subsistence, and other related expenses for all directors as a group.

(e) *Transactions with senior officers and directors.* (1) State the institution's policies, if any, on loans to and transactions with officers and directors of the institution.

(2) *Transactions other than loans.* For each person who served as a senior officer or director on January 1 of the year following the fiscal year of which the report is filed, or at any time during the fiscal year just ended, describe briefly any transaction or series of transactions other than loans that occurred at any time since the last annual meeting between the institution and such person, any member of the immediate family of such person, or any organization with which such person is affiliated.

(i) For transactions relating to the purchase or retirement of preferred stock issued by the institution, state the name of each senior officer or director that held preferred stock issued by the institution during the reporting period, the current amount of preferred stock held by the senior officer or director, the average dividend rate on the preferred stock currently held, and the amount of purchases and retirements by the individual during the reporting period.

(ii) For all other transactions, state the name of the senior officer or director who entered into the transaction or whose immediate family member or affiliated organization entered into the transaction, the nature of the person's interest in the transaction, and the terms of the transaction. No information need be given where the purchase price, fees, or charges involved were determined by competitive bidding or where the amount involved in the transaction (including the total of all periodic payments) does not exceed $5,000, or the interest of the person arises solely as a result of his or her status as a stockholder of the institution and the benefit received is not a special or extra benefit not available to all stockholders.

(3) *Loans to senior officers and directors.* (i) To the extent applicable, state that the institution (or in the case of an association that does not carry loans to its senior officers and directors on its books, its related bank) has had loans outstanding during the last full fiscal year to date to its senior officers and directors, their immediate family members, and any organizations with which such senior officers or directors are affiliated that:

(A) Were made in the ordinary course of business; and

(B) Were made on the same terms, including interest rate, amortization schedule, and collateral, as those prevailing at the time for comparable transactions with other persons.

(ii) To the extent applicable, state that no loan to a senior officer or director, or to any organization affiliated with such person, or to any immediate family member who resides in the same household as such person or in whose loan or business operation such person has a material financial or legal interest, involved more than the normal risk of collectability; provided that no such statement need be made with respect to any director or senior officer who has resigned before the time for filing the applicable report with the Farm Credit Administration (but in no case later than the actual filing), or whose term of office will expire or terminate no later than the date of the meeting of stockholders to which the report relates.

(iii) If the conditions stated in paragraphs (e)(3)(i) and (ii) of this section do not apply to the loans of the persons or organizations specified therein, with respect to such loans state:

(A) The name of the officer or director to whom the loan was made or to whose relative or affiliated organization the loan was made.

(B) The largest aggregate amount of each indebtedness outstanding at any time during the last fiscal year.

(C) The nature of the loan(s);

(D) The amount outstanding as of the latest practicable date.

(E) The reasons the loan does not comply with the criteria contained in paragraphs (e)(3)(i) and (e)(3)(ii) of this section.

(F) If the loan does not comply with paragraph (e)(3)(i)(B) of this section, the rate of interest payable on the loan and the repayment terms.

(G) If the loan does not comply with paragraph (e)(3)(ii) of this section, the amount past due, if any, and the reason the loan is deemed to involve more than a normal risk of collectability.

(f) *Involvement in certain legal proceedings.* Describe any of the following events that occurred during the past 5 years and that are material to an evaluation of the ability or integrity of any person who served as director or senior officer on January 1 of the year following the fiscal year for which the report is filed or at any time during the fiscal year just ended:

(1) A petition under the Federal bankruptcy laws or any State insolvency law was filed by or against, or a receiver, fiscal agent, or similar officer was appointed by a court for the business or property of such person, or any partnership in which such person was a general partner at or within 2 years before the time of such filing, or any corporation or business association

of which such person was a senior officer at or within 2 years before the time of such filing;

(2) Such person was convicted in a criminal proceeding or is a named party in a pending criminal proceeding (excluding traffic violations and other misdemeanors);

(3) Such person was the subject of any order, judgment, or decree, not subsequently reversed, suspended, or vacated, by any court of competent jurisdiction, permanently or temporarily enjoining or otherwise limiting such person from engaging in any type of business practice.

■ 19. Section 620.10 is amended by:

■ a. Revising paragraph (a); and

■ b. Adding a new paragraph (c) to read as follows:

§ 620.10 Preparing the quarterly report.

(a) Each institution of the Farm Credit System must:

(1) Prepare and send to the Farm Credit Administration an electronic copy of its quarterly report within 40 calendar days after the end of each fiscal quarter, except that no report need be prepared for the fiscal quarter that coincides with the end of the fiscal year of the institution;

(2) Publish a copy of its quarterly report on its Web site when it electronically sends the report to the Farm Credit Administration; and

(3) Ensure the report complies with the applicable provisions of §§ 620.2 and 620.3.

* * * * *

(c) Institutions may use the quarterly report to deliver any notice required under § 620.15. Notices required under § 620.17 must be issued separately from the quarterly report, unless otherwise authorized by the Farm Credit Administration.

■ 20. Section 620.11 is amended by:

■ a. Revising the introductory text of paragraph (b);

■ b. Revising paragraphs (c) and (d); and

■ c. Removing paragraphs (e) and (f).

The revisions read as follows:

§ 620.11 Content of quarterly report to shareholders.

* * * * *

(b) *Rules for condensation.* For purposes of this section, major captions to be provided in the financial statements are the same as those provided in the financial statements contained in the institution's annual report to shareholders, except that the financial statements included in the quarterly report may be condensed into major captions in accordance with the rules prescribed under this paragraph. If any amount that would otherwise be required to be shown by this subpart with respect to any item is not material, it need not be separately shown. The combination of insignificant items is permitted.

* * * * *

(c) *Required content.* A quarterly report must, at a minimum, contain the following items:

(1) *Management's discussion and analysis of financial condition and results of operations.* Discuss material changes, if any, to the information provided to shareholders pursuant to § 620.5(g) that have occurred during the periods specified in paragraphs (c)(2)(i) and (ii) of this section. Such additional information as is needed to enable the reader to assess material changes in financial condition and results of operations between the periods specified in paragraphs (c)(2)(i) and (ii) of this section shall be provided.

(i) *Material changes in financial condition.* Discuss any material changes in financial condition from the end of the preceding fiscal year to the date of the most recent interim balance sheet provided. If the interim financial statements include an interim balance sheet as of the corresponding interim date of the preceding fiscal year, any material changes in financial conditions from that date to the date of the most recent interim balance sheet provided also shall be discussed. If discussions of changes from both the end and the corresponding interim date of the preceding fiscal year are required, the discussions may be combined at the discretion of the institution.

(ii) *Material changes in results of operations.* Discuss any material changes in the institution's results of operations with respect to the most recent fiscal year-to-date period for which an income statement is provided and the corresponding year-to-date period of the preceding fiscal year. Such discussion also shall cover material changes with respect to that fiscal quarter and the corresponding fiscal quarter in the preceding fiscal year. In addition, if the institution has elected to provide an income statement for the 12-month period ended as of the date of the most recent interim balance sheet provided, the discussion also shall cover material changes with respect to that 12-month period and the 12-month period ended as of the corresponding interim balance sheet date of the preceding fiscal year.

(2) *Interim financial statements.* The following financial statements must be provided:

(i) An interim balance sheet as of the end of the most recent fiscal quarter and as of the end of the preceding fiscal year. A balance sheet for the comparable quarter of the preceding fiscal year is optional.

(ii) Interim statements of income for the most recent fiscal quarter, for the period between the end of the preceding fiscal year and the end of the most recent fiscal quarter, and for the comparable periods for the previous fiscal year.

(iii) Interim statements of changes in protected borrower capital and at-risk capital for the period between the end of the preceding fiscal year and the end of the most recent fiscal quarter, and for the comparable period for the preceding fiscal year.

(iv) For banks, interim statements of cash flows for the period between the end of the preceding fiscal year and the end of the most recent fiscal quarter, and for the comparable period for the preceding fiscal year. For associations, interim statements of cash flows are optional.

(3) *Other related financial items.* State that the financial statements were prepared under the oversight of the audit committee. The interim financial information need not be audited or reviewed by a qualified public accountant or external auditor prior to filing. If, however, a review of the data is made in accordance with the established professional standards and procedures for such a review, the institution may state that a qualified public accountant or external auditor has performed such a review under the supervision of the institution's audit committee. If such a statement is made, the report of a qualified public accountant or external auditor on such review must accompany the interim financial information.

(d) *Notices.* Institutions using the quarterly report to deliver any notice required under § 620.15 must put the notice information at the beginning of the quarterly report. The notice must be conspicuous and may not be part of any footnotes to the quarterly report.

■ 21. Sections 620.15 and 620.17 are revised to read as follows:

§ 620.15 Notice of significant or material events.

When a Farm Credit bank or association determines that it has a significant or material event, the institution must prepare and provide to its shareholders and the Farm Credit Administration a notice disclosing the event(s).

(a) Each bank and association board of directors must establish and maintain a policy identifying the categories and types of events that may result in a

notice under this section. At a minimum, events covered under this provision include significant events defined in § 620.1(q) and material events defined in § 620.1(h). The policy must identify how the significance or materiality of an event will be determined.

(b) A notice issued under this section must be made as soon as possible, but not later than 90 days after occurrence of the event.

(1) Each institution must electronically provide the notice to the Farm Credit Administration at the same time as distribution of the notice to shareholders.

(2) Delivery of the notice to shareholders may be accomplished by direct communications with the shareholders, posting the notice on the institution's Web site, as part of the quarterly report to shareholders, or by publishing the notice in any publication with circulation wide enough to reasonably assure that all of the institution's shareholders have access to the information in a timely manner. No matter how the notice is distributed, it must comply with all the provisions of this section.

(c) Every notice must be dated and signed in a manner similar to the requirements of § 620.3(b).

(d) The information required to be included in a notice issued under this section must be conspicuous, easily understandable, complete, accurate, and not misleading.

(e) A Farm Credit System institution may be required to issue a notice under this section at the direction of the Farm Credit Administration.

§ 620.17 Special notice provisions for events related to minimum permanent capital.

(a) When a Farm Credit bank or association determines that it is not in compliance with the minimum permanent capital standard prescribed under § 615.5205 of this chapter, that institution must prepare and provide to its shareholders and the Farm Credit Administration a notice stating that the institution has initially determined it is not in compliance with minimum permanent capital standards. Such notice must be given within 30 days following the month end.

(b) When notice is given under paragraph (a) of this section, the institution must also notify its shareholders and the Farm Credit Administration when the institution's permanent capital ratio decreases by one half of 1 percent or more from the level reported in the original notice, or from that reported in a subsequent notice provided under this paragraph. This notice must be given within 45 days following the end of every quarter at which the institution's permanent capital ratio decreases as specified.

(c) Each institution required to prepare a notice under paragraph (a) or (b) of this section shall provide the notice to shareholders or publish it in any publication with circulation wide enough to be reasonably assured that all of the institution's shareholders have access to the information in a timely manner. The information required to be included in this notice must be conspicuous, easily understandable, and not misleading.

(d) A notice, at a minimum, shall include:

(1) A statement that:

(i) Briefly describes the regulatory minimum permanent capital standard established by the Farm Credit Administration and the notice requirement of paragraph (a) of this section;

(ii) Indicates the institution's current level of permanent capital; and

(iii) Notifies shareholders that the institution's permanent capital is below the Farm Credit Administration regulatory minimum standard.

(2) A statement of the effect that noncompliance has had on the institution and its shareholders, including whether the institution is currently prohibited by statute or regulation from retiring stock or distributing earnings or whether the Farm Credit Administration has issued a capital directive or other enforcement action to the institution.

(3) A complete description of any event(s) that may have significantly contributed to the institution's noncompliance with the minimum permanent capital standard.

(4) A statement that the institution is required by regulation to provide another notice to shareholders within 45 days following the end of any subsequent quarter at which the institution's permanent capital ratio decreases by one half of 1 percent or more from the level reported in the notice.

■ 22. Section 620.21 is amended by revising paragraph (a)(3)(i) to read as follows:

§ 620.21 Contents of the information statement.

(a) * * *

(3) * * *

(i) If any transactions between the institution and its senior officers and directors of the type required to be disclosed in the annual report to shareholders under § 620.6(e), or any of the events required to be disclosed in the annual report to shareholders under § 620.6(f) have occurred since the end of the last fiscal year and were not disclosed in the annual report to shareholders, the disclosures required by § 620.6(e) and (f) shall be made with respect to such transactions or events in the information statement. If any material change in the matters disclosed in the annual report to shareholders pursuant to § 620.6(e) and (f) has occurred since the annual report to shareholders was prepared, disclosure shall be made of such change in the information statement.

* * * * *

■ 23. Section 620.31 is revised to read as follows:

§ 620.31 Compensation committees.

Each Farm Credit bank and association must establish and maintain a compensation committee by adopting a written charter describing the committee's composition, authorities, and responsibilities in accordance with this section. The compensation committee must report only to the board of directors. All compensation committees are required to maintain records of meetings, including attendance, for at least 3 fiscal years.

(a) *Composition.* Each compensation committee must consist of at least three members and all committee members must be members of the institution's board of directors. Every member must be free from any relationship that, in the opinion of the board, would interfere with the exercise of independent judgment as a committee member.

(b) *Responsibilities.* It is the responsibility of each compensation committee to review the compensation policies and plans for senior officers and employees and to approve the overall compensation program for senior officers. In fulfilling its responsibilities, the compensation committee must document that it determined the:

(1) Institution's projected long-term compensation and retirement benefit obligations are appropriate to the services performed and not excessive;

(2) Incentive-based compensation programs and payments are reasonable and proportionate to the services performed and structured so the payout schedule considers the potential for future losses or undue risks to the institution;

(3) Senior officer compensation, incentive, and benefit programs support the institution's long-term business strategy and mission, as well as promote safe and sound business practices; and

(4) Compensation programs designed for specific groups of employees, other

than senior officers, pose no imprudent risks to the institution.

(c) *Resources.* Each institution must provide monetary and nonmonetary resources to enable its compensation committee to perform its duties.

PART 630—DISCLOSURE TO INVESTORS IN SYSTEM-WIDE AND CONSOLIDATED BANK DEBT OBLIGATIONS OF THE FARM CREDIT SYSTEM

■ 24. The authority citation for part 630 is revised to read as follows:

Authority: Secs. 4.2, 4.9, 5.9, 5.17, 5.19 of the Farm Credit Act (12 U.S.C. 2153, 2160, 2243, 2252, 2254); sec. 424 of Pub. L. 100–233, 101 Stat. 1568, 1656; sec. 514 of Pub. L. 102–552, 106 Stat. 4102.

■ 25. Section 630.6 is amended by revising paragraph (b) to read as follows:

§ 630.6 Funding Corporation committees.

* * * * *

(b) *Compensation committee.* The Funding Corporation must establish and maintain a compensation committee by adopting a written charter describing the committee's composition, authorities, and responsibilities in accordance with this section. The compensation committee must report only to the board of directors. The compensation committee is required to maintain records of meetings, including attendance, for at least 3 fiscal years.

(1) *Composition.* The committee must consist of at least three members and all members must be members of the Funding Corporation's board of directors. Every compensation committee member must be free from any relationship that, in the opinion of the board, would interfere with the exercise of independent judgment as a committee member.

(2) *Responsibilities.* It is the responsibility of the compensation committee to review the compensation policies and plans for senior officers and employees and to approve the overall compensation program for senior officers. In fulfilling its responsibilities, the compensation committee must document that it determined the:

(i) Funding Corporation's projected long-term compensation and retirement benefit obligations are appropriate to the services performed and not excessive;

(ii) Incentive-based compensation programs and payments are reasonable and proportionate to the services performed and structured so the payout schedule considers the potential for future losses or undue risks to the Funding Corporation; and

(iii) Senior officer compensation, incentive, and benefit programs support the Funding Corporation's long-term business strategy and mission, as well as promote safe and sound business practices.

(3) *Resources.* The Funding Corporation must provide monetary and nonmonetary resources to enable its compensation committee to perform its duties.

■ 26. Section 630.20 is amended by revising paragraph (i) to read as follows:

§ 630.20 Contents of the annual report to investors.

* * * * *

(i) *Compensation of directors and senior officers.* State that information on the compensation of directors and senior officers of Farm Credit banks is contained in each bank's annual report to shareholders and that the annual report of each bank is available to investors upon request pursuant to § 630.3(g). State whether advisory votes were held in any of the disclosure entities during the reporting period and the results of such vote.

* * * * *

Dated: September 20, 2012.

Dale L. Aultman,

Secretary, Farm Credit Administration Board.

[FR Doc. 2012–23726 Filed 10–2–12; 8:45 am]

BILLING CODE 6705–01–P

Reader Aids

Federal Register

Vol. 77, No. 192

Wednesday, October 3, 2012

CUSTOMER SERVICE AND INFORMATION

Federal Register/Code of Federal Regulations	
General Information, indexes and other finding aids	**202–741–6000**
Laws	**741–6000**
Presidential Documents	
Executive orders and proclamations	**741–6000**
The United States Government Manual	**741–6000**
Other Services	
Electronic and on-line services (voice)	**741–6020**
Privacy Act Compilation	**741–6064**
Public Laws Update Service (numbers, dates, etc.)	**741–6043**
TTY for the deaf-and-hard-of-hearing	**741–6086**

ELECTRONIC RESEARCH

World Wide Web

Full text of the daily Federal Register, CFR and other publications is located at: **www.fdsys.gov.**

Federal Register information and research tools, including Public Inspection List, indexes, and links to GPO Access are located at: **www.ofr.gov.**

E-mail

FEDREGTOC-L (Federal Register Table of Contents LISTSERV) is an open e-mail service that provides subscribers with a digital form of the Federal Register Table of Contents. The digital form of the Federal Register Table of Contents includes HTML and PDF links to the full text of each document.

To join or leave, go to **http://listserv.access.gpo.gov** and select *Online mailing list archives, FEDREGTOC-L, Join or leave the list (or change settings);* then follow the instructions.

PENS (Public Law Electronic Notification Service) is an e-mail service that notifies subscribers of recently enacted laws.

To subscribe, go to **http://listserv.gsa.gov/archives/publaws-l.html** and select *Join or leave the list (or change settings);* then follow the instructions.

FEDREGTOC-L and **PENS** are mailing lists only. We cannot respond to specific inquiries.

Reference questions. Send questions and comments about the Federal Register system to: **fedreg.info@nara.gov**

The Federal Register staff cannot interpret specific documents or regulations.

Reminders. Effective January 1, 2009, the Reminders, including Rules Going Into Effect and Comments Due Next Week, no longer appear in the Reader Aids section of the Federal Register. This information can be found online at **http://www.regulations.gov.**

CFR Checklist. Effective January 1, 2009, the CFR Checklist no longer appears in the Federal Register. This information can be found online at **http://bookstore.gpo.gov/.**

FEDERAL REGISTER PAGES AND DATE, OCTOBER

59709–60028 1
60029–60276 2
60277–60602 3

CFR PARTS AFFECTED DURING OCTOBER

At the end of each month the Office of the Federal Register publishes separately a List of CFR Sections Affected (LSA), which lists parts and sections affected by documents published since the revision date of each title.

3 CFR

Proclamations:
8871 60277
8872 60279
Executive Orders:
13627 60029
Administrative Orders:
Memorandums:
Memorandum of September 27, 2012 60035
Notices:
Notice of September 11, 2012 (corrected) 60037
Order of September 28, 2012 60281

5 CFR

1631 60039

7 CFR

301 59709

10 CFR

50 60039
429 ..... 59712, 59719
430 ..... 59712, 59719

12 CFR

611 60582
612 60582
619 60582
620 60582
630 60582
Proposed Rules:
45 60057
237 60057
324 60057
624 60057
1221 60057

14 CFR

39 ..... 59726, 59728, 59732, 60285, 60288, 60296
97 ..... 59735, 59738
Proposed Rules:
39 ..... 59873, 60060, 60062, 60064, 60073, 60075, 60323, 60325, 60331

18 CFR

357 59739
375 59745

20 CFR

655 60040

21 CFR

510 60301
522 60301
524 60301
558 60301

23 CFR

Proposed Rules:
771 59875

25 CFR

36 60041

26 CFR

Proposed Rules:
1 59878

31 CFR

1010 59747

33 CFR

100 ..... 59749, 60302
165 ..... 59749, 60042, 60044
Proposed Rules:
110 60081

34 CFR

36 60047

36 CFR

7 60050

37 CFR

Proposed Rules:
201 60333

38 CFR

9 60304

39 CFR

Proposed Rules:
111 60334

40 CFR

52 ..... 59751, 59755, 60053, 60307
180 60311
272 59758
Proposed Rules:
52 ..... 59879, 60085, 60087, 60089, 60094, 60339
63 60341
272 59879

42 CFR

412 60315
413 60315
424 60315
476 60315

44 CFR

64 ..... 59762, 59764
65 59767
Proposed Rules:
67 59880

46 CFR

1 59768
2 59768
6 59768
8 59768
10 59768
11 59768
12 59768
15 59768
16 59768
24 59768
25 59768
26 59768
27 59768
28 59768
30 59768
31 59768
32 59768
34 59768
35 59768
39 59768
42 59768
46 59768
50 59768
52 59768
53 59768
54 59768
56 59768
57 59768
58 59768
59 59768
61 59768
62 59768
63 59768
64 59768
67 59768
70 59768
71 59768
76 59768
77 59768
78 59768
90 59768
91 59768
92 59768
95 59768
96 59768
97 59768
98 59768
105 59768
107 59768
108 59768
109 59768
110 59768
111 59768
114 59768
117 59768
125 59768
126 59768
127 59768
128 59768
130 59768
131 59768
133 59768
134 59768
147 59768
148 59768
150 59768
151 59768
153 59768
154 59768
159 59768
160 59768
161 59768
162 59768
164 59768
167 59768
169 59768
170 59768
171 59768
172 59768
174 59768
175 59768
179 59768
180 59768
188 59768
189 59768
193 59768
194 59768
195 59768
197 59768
199 59768
401 59768

Proposed Rules:

7 59881
8 60096

47 CFR

Proposed Rules:

64 60343
73 59882

48 CFR

504 59790
552 59790

Proposed Rules:

53 60343

49 CFR

33 59793
40 60318
173 60056
Ch. III 59818, 59840
303 59818
325 59818
350 59818
355 59818
356 59818
360 59818
365 59818
366 59818
367 59818
368 59818
369 59818
370 59818
371 59818
372 59818
373 59818
374 59818
375 59818
376 59818
377 59818
378 59818
379 59818
380 59818
381 59818
382 59818
383 59818
384 59818
385 59818
386 59818
387 59818
388 59818
389 59818
390 59818
391 59818
392 59818
393 59818
395 59818
396 59818
397 59818
398 59818
399 59818
450 59768
451 59768
452 59768
453 59768
593 59829

Proposed Rules:

622 59875

50 CFR

229 60319
600 59842
635 59842
679 ....59852, 60321

Proposed Rules:

17 ....60180, 60208, 60238, 60510
648 59883

LIST OF PUBLIC LAWS

This is a continuing list of public bills from the current session of Congress which have become Federal laws. It may be used in conjunction with ''P L U S'' (Public Laws Update Service) on 202–741–6043. This list is also available online at *http://www.archives.gov/federal-register/laws*.

The text of laws is not published in the **Federal Register** but may be ordered in ''slip law'' (individual pamphlet) form from the Superintendent of Documents, U.S. Government Printing Office, Washington, DC 20402 (phone, 202–512–1808). The text will also be made available on the Internet from GPO's Federal Digital System (FDsys) at *http://www.gpo.gov/fdsys*. Some laws may not yet be available.

H.J. Res. 117/P.L. 112–175
Making continuing appropriations for fiscal year 2013, and for other puroses. (Sept. 28, 2012; 126 Stat. 1313)

S. 3245/P.L. 112–176
To extend by 3 years the authorization of the EB-5 Regional Center Program, the E-Verify Program, the Special Immigrant Nonminister Religious Worker Program, and the Conrad State 30 J-1 Visa Waiver Program. (Sept. 28, 2012; 126 Stat. 1325)

S. 3552/P.L. 112–177
Pesticide Registration Improvement Extension Act of 2012 (Sept. 28, 2012; 126 Stat. 1327)

S. 3625/P.L. 112–178
To change the effective date for the internet publication of certain information to prevent harm to the national security or endangering the military officers and civilian employees to whom the publication requirement applies, and forother purposes. (Sept. 28, 2012; 126 Stat. 1408)

Last List September 24, 2012

Public Laws Electronic Notification Service (PENS)

PENS is a free electronic mail notification service of newly enacted public laws. To subscribe, go to *http://listserv.gsa.gov/archives/publaws-l.html*

Note: This service is strictly for E-mail notification of new laws. The text of laws is not available through this service. **PENS** cannot respond to specific inquiries sent to this address.