AUTHENTICATED
U.S. GOVERNMENT
INFORMATION
GPO

FEDERAL REGISTER

Vol. 77 Tuesday,

No. 224 November 20, 2012

Pages 69553–69732

OFFICE OF THE FEDERAL REGISTER

The **FEDERAL REGISTER** (ISSN 0097–6326) is published daily, Monday through Friday, except official holidays, by the Office of the Federal Register, National Archives and Records Administration, Washington, DC 20408, under the Federal Register Act (44 U.S.C. Ch. 15) and the regulations of the Administrative Committee of the Federal Register (1 CFR Ch. I). The Superintendent of Documents, U.S. Government Printing Office, Washington, DC 20402 is the exclusive distributor of the official edition. Periodicals postage is paid at Washington, DC.

The **FEDERAL REGISTER** provides a uniform system for making available to the public regulations and legal notices issued by Federal agencies. These include Presidential proclamations and Executive Orders, Federal agency documents having general applicability and legal effect, documents required to be published by act of Congress, and other Federal agency documents of public interest.

Documents are on file for public inspection in the Office of the Federal Register the day before they are published, unless the issuing agency requests earlier filing. For a list of documents currently on file for public inspection, see *www.ofr.gov.*

The seal of the National Archives and Records Administration authenticates the Federal Register as the official serial publication established under the Federal Register Act. Under 44 U.S.C. 1507, the contents of the **Federal Register** shall be judicially noticed.

The **Federal Register** is published in paper and on 24x microfiche. It is also available online at no charge at *www.fdsys.gov*, a service of the U.S. Government Printing Office.

The online edition of the **Federal Register** is issued under the authority of the Administrative Committee of the Federal Register as the official legal equivalent of the paper and microfiche editions (44 U.S.C. 4101 and 1 CFR 5.10). It is updated by 6:00 a.m. each day the **Federal Register** is published and includes both text and graphics from Volume 59, 1 (January 2, 1994) forward. For more information, contact the GPO Customer Contact Center, U.S. Government Printing Office. Phone 202-512-1800 or 866-512-1800 (toll free). E-mail, *gpo@custhelp.com.*

The annual subscription price for the **Federal Register** paper edition is $749 plus postage, or $808, plus postage, for a combined **Federal Register, Federal Register** Index and List of CFR Sections Affected (LSA) subscription; the microfiche edition of the **Federal Register** including the **Federal Register** Index and LSA is $165, plus postage. Six month subscriptions are available for one-half the annual rate. The prevailing postal rates will be applied to orders according to the delivery method requested. The price of a single copy of the daily **Federal Register,** including postage, is based on the number of pages: $11 for an issue containing less than 200 pages; $22 for an issue containing 200 to 400 pages; and $33 for an issue containing more than 400 pages. Single issues of the microfiche edition may be purchased for $3 per copy, including postage. Remit check or money order, made payable to the Superintendent of Documents, or charge to your GPO Deposit Account, VISA, MasterCard, American Express, or Discover. Mail to: U.S. Government Printing Office—New Orders, P.O. Box 979050, St. Louis, MO 63197-9000; or call toll free 1-866-512-1800, DC area 202-512-1800; or go to the U.S. Government Online Bookstore site, see *bookstore.gpo.gov.*

There are no restrictions on the republication of material appearing in the **Federal Register.**

How To Cite This Publication: Use the volume number and the page number. Example: 77 FR 12345.

Postmaster: Send address changes to the Superintendent of Documents, Federal Register, U.S. Government Printing Office, Washington, DC 20402, along with the entire mailing label from the last issue received.

SUBSCRIPTIONS AND COPIES

PUBLIC

Subscriptions:

Paper or fiche	**202–512–1800**
Assistance with public subscriptions	**202–512–1806**

General online information **202–512–1530; 1–888–293–6498**

Single copies/back copies:

Paper or fiche	**202–512–1800**
Assistance with public single copies	**1–866–512–1800 (Toll-Free)**

FEDERAL AGENCIES

Subscriptions:

Paper or fiche	**202–741–6005**
Assistance with Federal agency subscriptions	**202–741–6005**

FEDERAL REGISTER WORKSHOP

THE FEDERAL REGISTER: WHAT IT IS AND HOW TO USE IT

FOR: Any person who uses the Federal Register and Code of Federal Regulations.

WHO: Sponsored by the Office of the Federal Register.

WHAT: Free public briefings (approximately 3 hours) to present:

1. The regulatory process, with a focus on the Federal Register system and the public's role in the development of regulations.
2. The relationship between the Federal Register and Code of Federal Regulations.
3. The important elements of typical Federal Register documents.
4. An introduction to the finding aids of the FR/CFR system.

WHY: To provide the public with access to information necessary to research Federal agency regulations which directly affect them. There will be no discussion of specific agency regulations.

WHEN: Tuesday, December 11, 2012
9 a.m.–12:30 p.m.

WHERE: Office of the Federal Register
Conference Room, Suite 700
800 North Capitol Street, NW.
Washington, DC 20002

RESERVATIONS: (202) 741–6008

Printed on recycled paper.

Contents

Federal Register

Vol. 77, No. 224

Tuesday, November 20, 2012

Agriculture Department
NOTICES
Agency Information Collection Activities; Proposals, Submissions, and Approvals, 69590–69591

Blind or Severely Disabled, Committee for Purchase From People Who Are
See Committee for Purchase From People Who Are Blind or Severely Disabled

Broadcasting Board of Governors
NOTICES
Membership of SES Performance Review Board, 69591

Centers for Disease Control and Prevention
NOTICES
Requests for Nominations:
National Public Health Surveillance and Biosurveillance Advisory Committee; Correction, 69628

Children and Families Administration
NOTICES
Agency Information Collection Activities; Proposals, Submissions, and Approvals:
Head Start Eligibility Verification, 69629
Allotment Percentages to States for Child Welfare Services State Grants, 69629–69630

Coast Guard
RULES
Drawbridge Operations:
Barataria Bayou, Lafitte, LA, 69562
Bayou Boeuf, Amelia, LA, 69564
Thea Foss Waterway, Previously Known as City Waterway, Tacoma, WA, 69562–69564
PROPOSED RULES
Drawbridge Operations:
Thea Foss Waterway, Previously Known as City Waterway, Tacoma, WA, 69576–69579

Commerce Department
See Foreign-Trade Zones Board
See International Trade Administration
See National Oceanic and Atmospheric Administration
See National Telecommunications and Information Administration

Committee for Purchase From People Who Are Blind or Severely Disabled
NOTICES
Procurement List; Additions and Deletions, 69598

Consumer Product Safety Commission
NOTICES
Meetings; Sunshine Act, 69598

Defense Department
RULES
Federal Acquisition Regulations:
Federal Acquisition Circular 2005–62; Introduction, 69714
Federal Acquisition Circular 2005–62; Small Entity Compliance Guide, 69726–69727
Free Trade Agreement—Panama, 69723–69726
Interagency Acquisitions; Compliance by Nondefense Agencies with Defense Procurement Requirements, 69720–69723
Updates to Contract Reporting and Central Contractor Registration, 69715–69720
NOTICES
Agency Information Collection Activities; Proposals, Submissions, and Approvals:
Federal Acquisition Regulation; Subcontracting Plans/Individual Subcontract Report, 69626–69627
Use of Project Labor Agreements for Federal Construction Projects, 69627
Meetings:
Defense Advisory Committee on Women in the Services, 69598–69599
Reserve Forces Policy Board, 69599
Renewal of Department of Defense Federal Advisory Committees, 69599–69601
Science and Technology Reinvention Laboratory Personnel Management Demonstration Projects, 69601–69603

Delaware River Basin Commission
NOTICES
Meetings, 69603–69604

Education Department
PROPOSED RULES
Requirements, Definitions, and Selection Criteria:
Native American Career and Technical Education Program, 69579–69585
NOTICES
Agency Information Collection Activities; Proposals, Submissions, and Approvals:
Educational Opportunity Centers Program Annual Performance Report, 69604
Applications for New Awards:
Model Demonstration Projects on Promoting Reentry Success through Continuity of Educational Opportunities, 69604–69613

Energy Department
See Federal Energy Regulatory Commission
See Western Area Power Administration
NOTICES
Agency Information Collection Activities; Proposals, Submissions, and Approvals, 69613
Meetings:
International Energy Agency, 69613–69614

Environmental Protection Agency
PROPOSED RULES
Greenhouse Gas Reporting Program:
Proposed Amendments and Confidentiality Determinations for Subpart I; Comment Period Extension, 69585–69586
NOTICES
Agency Information Collection Activities; Proposals, Submissions, and Approvals:
Renewable Fuels Standard Program, 69620
Proposed CERCLA Settlements:
Casmalia Disposal Site, 69620–69622

Executive Office of the President
See Presidential Documents

Federal Aviation Administration
RULES
Airworthiness Directives:
Eurocopter Deutschland GmbH Helicopters, 69558–69562
Eurocopter Deutschland Helicopters, 69556–69558
PROPOSED RULES
Special Conditions:
Bombardier Aerospace, Model BD–500–1A10 and BD–500–1A11 Airplanes; Sidestick Controllers, 69568–69569
Embraer S.A., Model EMB–550 Airplane, Limit Pilot Forces for Sidestick Control, 69571–69572
Embraer S.A., Model EMB–550 Airplane; Electronic Flight Control System, Lateral-Directional and Longitudinal Stability and Low Energy Awareness, 69573–69576
Embraer S.A., Model EMB–550 Airplanes; Flight Envelope Protection: High Speed Limiting, 69572–69573
Embraer S.A., Model EMB–550 Airplanes; Flight Envelope Protection: Pitch and Roll Limiting Functions, 69569–69571

Federal Communications Commission
PROPOSED RULES
Petition for Reconsideration of Action in Rulemaking Proceeding, 69586
NOTICES
Agency Information Collection Activities; Proposals, Submissions, and Approvals, 69622–69623

Federal Deposit Insurance Corporation
RULES
Policy Statement on the Principles for Development and Distribution of Annual Stress Test, 69553–69556

Federal Emergency Management Agency
RULES
Suspension of Community Eligibility, 69564–69567
NOTICES
Emergencies and Related Determinations:
District of Columbia, 69644
Maryland, 69643–69644
Emergency Declarations:
New Hampshire; Amendment No. 1, 69645–69646
New Hampshire; Amendment No. 2, 69645
New Hampshire; Amendment No. 3, 69644–69645
West Virginia; Amendment No. 1, 69645
Major Disaster Declarations:
Florida; Amendment No. 1, 69646
New Jersey; Amendment No. 3, 69646
New York; Amendment No. 3, 69646–69647
Major Disasters and Related Determinations:
New Jersey, 69647
New York, 69647–69648
Rhode Island, 69648
Meetings:
Board of Visitors for the National Fire Academy, 69648–69649

Federal Energy Regulatory Commission
NOTICES
Agency Information Collection Activities; Proposals, Submissions, and Approvals, 69614–69616
Applications:
EWP LLC, 69616–69617
Combined Filings, 69617–69618
Effectiveness of Exempt Wholesale Generator Status:
NRG Solar Borrego I LLC, et al., 69618
Petitions for Declaratory Orders:
Dairyland Power Cooperative, 69618–69619

Federal Reserve System
NOTICES
Formations of, Acquisitions by, and Mergers of Bank Holding Companies, 69623

Federal Trade Commission
NOTICES
Granting Requests for Early Termination of Waiting Periods under Premerger Notification Rules, 69623–69626

Food and Drug Administration
NOTICES
Agency Information Collection Activities; Proposals, Submissions, and Approvals:
New Animal Drug Applications and Supporting Regulations, 69630–69631
Draft Guidance for IRBs, Clinical Investigators, and Sponsors; Availability:
IRB Responsibilities for Reviewing the Qualifications of Investigators, Adequacy of Research Sites, and the Determination of Whether an IND/IDE is Needed, 69631–69632
Draft Guidances for Industry; Availability:
Electronic Source Data in Clinical Investigations, 69632–69633
Guidance for Industry; Availability:
Evaluating the Effectiveness of Anticoccidial Drugs in Food-Producing Animals, 69634
International Conference on Harmonisation; Guidance Availability:
Q11 Development and Manufacture of Drug Substances, 69634–69635
Meetings:
Pulmonary-Allergy Drugs Advisory Committee, 69635–69637
Requests for Comments:
Development of Prioritized Therapeutic Area Data Standards, 69637–69638

Foreign Assets Control Office
NOTICES
Additional Designations, Foreign Narcotics Kingpin Designation Act, 69706–69707

Foreign-Trade Zones Board
NOTICES
Expansions and Reorganizations:
Foreign-Trade Zone 33, Pittsburgh, PA, 69591

General Services Administration
RULES
Federal Acquisition Regulations:
Federal Acquisition Circular 2005–62; Introduction, 69714
Federal Acquisition Circular 2005–62; Small Entity Compliance Guide, 69726–69727
Free Trade Agreement—Panama, 69723–69726
Interagency Acquisitions; Compliance by Nondefense Agencies with Defense Procurement Requirements, 69720–69723
Updates to Contract Reporting and Central Contractor Registration, 69715–69720

NOTICES
Agency Information Collection Activities; Proposals, Submissions, and Approvals:
Federal Acquisition Regulation; Subcontracting Plans/Individual Subcontract Report, 69626–69627
Use of Project Labor Agreements for Federal Construction Projects, 69627

Health and Human Services Department
See Centers for Disease Control and Prevention
See Children and Families Administration
See Food and Drug Administration
See National Institutes of Health
See Substance Abuse and Mental Health Services Administration
NOTICES
Findings of Research Misconduct, 69627–69628

Homeland Security Department
See Coast Guard
See Federal Emergency Management Agency
See U.S. Customs and Border Protection

Housing and Urban Development Department
NOTICES
Housing Choice Voucher Program:
Fair Market Rents for Small Area Fair Market Rent Demonstration Program Participants, Fiscal Year 2013, 69651–69658

Internal Revenue Service
NOTICES
Agency Information Collection Activities; Proposals, Submissions, and Approvals, 69707

International Trade Administration
NOTICES
Meetings:
Presidents Export Council, 69591–69592
U.S. Multi-Sector Trade Mission to South India and Sri Lanka, 69592–69593

International Trade Commission
NOTICES
Meetings; Sunshine Act, 69658

Justice Department
See Justice Programs Office
NOTICES
Agency Information Collection Activities; Proposals, Submissions, and Approvals:
Annuity Broker Qualification Declaration Form, 69658

Justice Programs Office
NOTICES
Agency Information Collection Activities; Proposals, Submissions, and Approvals:
Generic Clearance for Cognitive, Pilot and Field Studies for Bureau of Justice Statistics, 69658–69659

National Aeronautics and Space Administration
RULES
Federal Acquisition Regulations:
Federal Acquisition Circular 2005–62; Introduction, 69714
Federal Acquisition Circular 2005–62; Small Entity Compliance Guide, 69726–69727
Free Trade Agreement—Panama, 69723–69726
Interagency Acquisitions; Compliance by Nondefense Agencies with Defense Procurement Requirements, 69720–69723
Updates to Contract Reporting and Central Contractor Registration, 69715–69720
NOTICES
Agency Information Collection Activities; Proposals, Submissions, and Approvals, 69659
Agency Information Collection Activities; Proposals, Submissions, and Approvals:
Federal Acquisition Regulation; Subcontracting Plans/Individual Subcontract Report, 69626–69627
Use of Project Labor Agreements for Federal Construction Projects, 69627

National Highway Traffic Safety Administration
PROPOSED RULES
Regulatory Review:
Small Business Impacts of Motor Vehicle Safety, 69586–69589

National Institutes of Health
NOTICES
Meetings:
Center for Scientific Review, 69640–69641
Eunice Kennedy Shriver National Institute of Child Health and Human Development, 69638–69639, 69641–69642
National Heart, Lung, and Blood Institute, 69639
National Institute of Allergy and Infectious Diseases, 69639, 69641
National Institute of General Medical Sciences, 69638
National Institute on Drug Abuse, 69640

National Oceanic and Atmospheric Administration
RULES
Fisheries of the Northeastern United States:
Summer Flounder Fishery; Quota Transfer, 69567
NOTICES
Atlantic Highly Migratory Species:
Exempted Fishing, Scientific Research, Display, and Chartering Permits; Letters of Acknowledgment, 69593–69595
Requests for Nominations:
Advisory Panel for Atlantic Highly Migratory Species Southeast Data, Assessment, and Review Workshops, 69596–69597

National Science Foundation
NOTICES
Permit Issued Under the Antarctic Conservation Act, 69660

National Telecommunications and Information Administration

NOTICES
Meetings:
Commerce Spectrum Management Advisory Committee, 69597–69598

National Women's Business Council
NOTICES
Agency Information Collection Activities; Proposals, Submissions, and Approvals, 69660–69661

Nuclear Regulatory Commission
NOTICES
Agency Information Collection Activities; Proposals, Submissions, and Approvals, 69661–69664

Meetings; Sunshine Act, 69664–69665

Presidential Documents
PROCLAMATIONS
Special Observances:
American Recycles Day (Proc. 8905), 69729–69732

Railroad Retirement Board
NOTICES
Agency Information Collection Activities; Proposals, Submissions, and Approvals, 69665–69666

Securities and Exchange Commission
NOTICES
Meetings; Sunshine Act, 69666–69667
Self-Regulatory Organizations; Proposed Rule Changes:
Chicago Board Options Exchange, Inc., 69667–69668
Chicago Stock Exchange, Inc., 69673–69677
NASDAQ Stock Market LLC, 69685–69688
National Stock Exchange, Inc., 69710–69712
New York Stock Exchange LLC, 69688–69691
NYSE Arca, Inc., 69670–69673, 69677–69682
NYSE MKT LLC, 69682–69685
Options Clearing Corp., 69668–69670

Small Business Administration
NOTICES
Disaster Declarations:
Florida; Amendment 1, 69691
North Carolina, 69692

Substance Abuse and Mental Health Services Administration
NOTICES
List of Laboratories and Instrumented Initial Testing Facilities which Meet Minimum Standards to Engage in Urine Drug Testing for Federal Agencies, 69642–69643

Transportation Department
See Federal Aviation Administration
See National Highway Traffic Safety Administration
NOTICES
Guidance on Review and Approval of Public Charter Prospectuses, 69692–69693

Treasury Department
See Foreign Assets Control Office
See Internal Revenue Service
NOTICES
Agency Information Collection Activities; Proposals, Submissions, and Approvals, 69693–69694
Determination of Foreign Exchange Swaps and Foreign Exchange Forwards under the Commodity Exchange Act, 69694–69705
Meetings:
Financial Research Advisory Committee, 69705–69706

U.S. Customs and Border Protection
NOTICES
Agency Information Collection Activities; Proposals, Submissions, and Approvals:
Application-Permit-Special License Unlading-Lading-Overtime Services, 69649–69650
Holders or Containers which Enter the United States Duty Free, 69650–69651
Approvals as Commercial Gaugers:
SGS North America, Inc., 69651

Western Area Power Administration
NOTICES
Draft Recommendations of Joint Outreach Team, 69619

Separate Parts In This Issue

Part II
Securities and Exchange Commission, 69710–69712

Part III
Defense Department, 69714–69727
General Services Administration, 69714–69727
National Aeronautics and Space Administration, 69714–69727

Part IV
Presidential Documents, 69729–69732

Reader Aids

Consult the Reader Aids section at the end of this page for phone numbers, online resources, finding aids, reminders, and notice of recently enacted public laws.

To subscribe to the Federal Register Table of Contents LISTSERV electronic mailing list, go to http://listserv.access.gpo.gov and select Online mailing list archives, FEDREGTOC-L, Join or leave the list (or change settings); then follow the instructions.

CFR PARTS AFFECTED IN THIS ISSUE

A cumulative list of the parts affected this month can be found in the Reader Aids section at the end of this issue.

3 CFR

Proclamations:

8905 69731

Proposed Rules:

12 CFR

325 69553

14 CFR

39 (2 documents) 69556, 69558

Proposed Rules:

25 (5 documents) 69568, 69569, 69571, 69572, 69573

33 CFR

117 (3 documents) 69562, 69564

Proposed Rules:

117 69576

34 CFR

Proposed Rules:

Ch. IV 69579

40 CFR

Proposed Rules:

98 69585

44 CFR

64 69564

47 CFR

Proposed Rules:

101 69581

48 CFR

Ch. 1 (2 documents) 69714, 69726

1 69715

4 (2 documents) 69715, 69720

13 69715

17 69720

19 69715

25 69723

32 69715

52 (2 documents) 69715, 69723

49 CFR

Proposed Rules:

571 69586

50 CFR

648 69567

Rules and Regulations

Federal Register
Vol. 77, No. 224
Tuesday, November 20, 2012

This section of the FEDERAL REGISTER contains regulatory documents having general applicability and legal effect, most of which are keyed to and codified in the Code of Federal Regulations, which is published under 50 titles pursuant to 44 U.S.C. 1510.

The Code of Federal Regulations is sold by the Superintendent of Documents. Prices of new books are listed in the first FEDERAL REGISTER issue of each week.

FEDERAL DEPOSIT INSURANCE CORPORATION

12 CFR Part 325

Policy Statement on the Principles for Development and Distribution of Annual Stress Test Scenarios

AGENCY: Federal Deposit Insurance Corporation (''FDIC'' or ''Corporation'').

ACTION: Interim guidance with request for public comment.

SUMMARY: This interim guidance sets forth the general processes and factors to be used by the FDIC in developing and distributing the stress test scenarios for the annual stress tests required by the Dodd-Frank Wall Street Reform and Consumer Protection Act of 2010 as implemented by the Annual Stress Test final rule (''Stress Test Rule'') published on October 15, 2012.[1] Under the Stress Test Rule FDIC-insured state nonmember banks and FDIC-insured state-chartered savings associations with total consolidated assets of more than $10 billion are required to conduct annual stress tests using a minimum of three scenarios (baseline, adverse and severely adverse) provided by the FDIC. The Stress Test Rule specified that the FDIC will provide the required scenarios to the covered banks no later than November 15th of each year.

DATES: This interim guidance is effective November 20, 2012. Comments must be submitted on or before January 22, 2013.

ADDRESSES: You may submit comments by any of the following methods:

- *Agency Web site: http://www.FDIC.gov/regulations/laws/federal/propose.html.* Follow the instructions for submitting comments.
- *Federal eRulemaking Portal: http://www.regulations.gov.* Follow the instructions for submitting comments.
- *Email: comments@FDIC.gov.* Include ''Policy Statement on the Principles for Development and Distribution of Annual Stress Test Scenarios'' in the subject line of the message. Comments received will be posted without change to *http://www.FDIC.gov/regulations/laws/federal/propose.html,* including any personal information provided.
- *Mail:* Robert E. Feldman, Executive Secretary, Attention: Comments/Legal ESS, Federal Deposit Insurance Corporation, 550 17th Street NW., Washington, DC 20429.
- *Hand Delivery/Courier:* Guard station at the rear of the 550 17th Street Building (located on F Street), on business days between 7:00 a.m. and 5:00 p.m. (EDT).

Instructions: Please use the title ''Policy Statement on the Principles for Development and Distribution of Annual Stress Test Scenarios'' to facilitate the organization and distribution of the comments.

FOR FURTHER INFORMATION CONTACT: George French, Deputy Director, Policy, (202) 898–3929, Robert Burns, Associate Director, Mid-Tier Bank Branch, (202) 898–3905, or Ryan Sheller, Senior Large Financial Institutions Specialist, (202) 412–4861, Division of Risk Management and Supervision; Philip A. Shively, Chief, Economic Analysis Section, (202) 898–6790, Division of Insurance and Research; Mark G. Flanigan, Counsel, (202) 898–7426, Rachel Jones, Attorney, (202) 898–6858, or Grace Pyun, Attorney, (202) 898–3609, Legal Division, Federal Deposit Insurance Corporation, 550 17th Street NW., Washington, DC 20429.

SUPPLEMENTARY INFORMATION:

I. Background

Section 165(i)(2) of the Dodd-Frank Wall Street Reform and Consumer Protection Act of 2010 requires certain financial companies, including FDIC-insured state nonmember banks and FDIC-insured state-chartered savings associations with total consolidated assets of more than $10 billion (''covered banks''), to conduct annual stress tests. The FDIC published in the **Federal Register** on October 15, 2012 (77 FR 62417), the Stress Test Rule implementing the requirements and setting out definitions and rules for scope of application, scenarios, reporting, and disclosure. Under the Stress Test Rule, covered banks are required to conduct annual stress tests based on the annual stress test cycle set out in Table 1.

PROCESS OVERVIEW OF ANNUAL STRESS TEST

[Using data as of September 30th]

Step	Timeframe for over $50 billion covered banks	Timeframe for $10 billion to $50 billion covered banks
1. FDIC provides covered banks with scenarios for annual stress tests	No later than November 15th	No later than November 15th.
2. Covered banks submit required regulatory reports to the FDIC on their stress tests.	No later than January 5th	No later than March 31st.[2]
3. Covered banks make required public disclosures	Between March 15th and March 31st.	Between June 15th and June 30th.

A key component of the annual stress test is the development of the stress test scenarios that are provided to covered banks on or before November 15th of each year. Scenarios are those sets of conditions that affect the U.S. economy or the financial condition of a covered bank that the FDIC annually determines are appropriate for use in the stress

[1] 77 FR 62417 (Oct. 15, 2012).

[2] A covered bank subsidiary may elect to report and issue its required public disclosure on its parent bank holding company's or savings and loan holding company's timeline.

tests, including, but not limited to, baseline, adverse, and severely adverse scenarios. Each scenario includes the values of the variables specified for each quarter over the stress test horizon. The variables specified for each scenario generally address economic activity, asset prices, and other measures of financial market conditions for the United States and key foreign countries. The FDIC annually will determine scenarios that are appropriate for use for each annual stress test. The timeline in Table 1 provides that the FDIC will distribute stress test scenarios to covered banks no later than November 15th of each year. This document articulates the principles that the FDIC will apply to develop and distribute those scenarios for covered banks.

II. Immediate Effective Date and Request for Comment

This interim guidance is effective November 20, 2012 and applicable, to the extent practicable, to the annual stress test cycle beginning this year. As explained in the preamble, the Stress Test Rule was effective immediately upon publication because the stress testing framework represents a critical tool for supervision and is essential for the health of covered banks and the overall financial stability of the economy.[3] For this reason, FDIC believed that it was necessary for certain FDIC-insured state nonmember banks and FDIC-insured state-chartered savings associations with total consolidated assets not less than $50 billion to conduct stress tests under the Stress Test Rule this year. The stress tests conducted under the Stress Test Rule framework will provide important forward-looking information to supervisors to assist in the overall assessment of a covered bank's capital adequacy and will help determine whether additional analytical techniques and exercises are appropriate to identify measure and monitor risk to the financial soundness of the covered bank. Moreover, the FDIC believes that the stress tests will benefit the covered banks by supporting their own forward-looking assessments of their risks and better equip them to address a range of adverse outcomes. Similarly, the FDIC believes that it is necessary to make this interim guidance effective immediately. While the FDIC recognizes that because of timing issues many of the procedural aspects of this interim guidance will not be relevant for the development of the scenarios for this year, the FDIC believes that it is important to give covered banks a sense of the general processes and factors used for scenario development that the FDIC expects to use going forward, and an opportunity to comment.

The FDIC solicits comment on all aspects of the interim guidance. Specifically, what challenges, if any, exist in applying this guidance generally or at particular banking organizations and are there any terms described by the interim guidance that require further clarification and how should they be defined?

III. Paperwork Reduction Act

In accordance with the Paperwork Reduction Act (''PRA'') of 1995 (44 U.S.C. 3506; 5 CFR part 1320 appendix A.1), the FDIC has reviewed this interim guidance. The FDIC may not conduct or sponsor, and an organization is not required to respond to, an information collection unless the information collection displays a currently valid OMB control number. The FDIC has conducted a PRA analysis on all related reporting, recordkeeping and disclosure requirements in the Stress Test Rule and submitted them to OMB for review and approval. The request, which has been assigned OMB Control No. 3064–0187, is still pending. No new collection of information pursuant to the PRA is contained in this interim guidance.

IV. Principles for Development and Distribution of Annual Stress Test Scenarios

The text of the interim policy statement is as follows.

Principles for Development and Distribution of Stress Test Scenarios

I. Introduction

Section 165(i)(2) of the Dodd-Frank Wall Street Reform and Consumer Protection Act of 2010 requires certain financial companies, including FDIC-insured state nonmember banks and FDIC-insured state-chartered savings associations with total consolidated assets of more than $10 billion (''covered banks''), to conduct annual stress tests. The Federal Deposit Insurance Corporation (''FDIC'' or ''Corporation'') published in the **Federal Register** on October 15, 2012, a final rule (''Stress Test Rule'') implementing the requirements and setting out definitions and rules for scope of application, scenarios, reporting, and disclosure.[1] Under the Stress Test Rule, each year the FDIC will distribute stress test scenarios to covered banks. This document articulates the principles that the FDIC will apply to develop and distribute those scenarios for covered banks.

II. Stress Tests

As defined by the Stress Test Rule, a stress test means ''the process to assess the potential impact of scenarios on the consolidated earnings, losses, and capital of a covered bank over the planning horizon, taking into account the current condition of the covered bank and the covered bank's risks, exposures, strategies, and activities.''[2] Stress tests help covered banks and the FDIC determine whether those banks have capital sufficient to absorb losses that could result from adverse economic conditions. The FDIC views stress test results as one source of forward-looking information that can help identify downside risks and assess the potential impact of adverse outcomes on capital adequacy. Stress tests are not the only tool the FDIC uses for these purposes; a complete assessment of a covered bank's capital position typically includes review of its capital planning processes, the governance concerning those processes, and the adequacy of capital under established regulatory capital measures. The FDIC expects the board of directors and senior management of each covered bank to consider the results of the annual stress test when conducting capital planning, assessing capital adequacy, and evaluating risk management practices.[3] The FDIC also may use stress test results to determine whether additional analytical techniques and exercises are appropriate for a covered bank to employ in identifying, measuring, and monitoring risks to the financial soundness of the covered bank.

Under the Stress Test Rule, each covered bank is required to conduct an annual stress test using its financial data as of September 30th of each year, unless the FDIC requires a different ''as of'' date for any or all categories of financial data.[4] The stress test must assess the potential impact of specific scenarios on the regulatory capital of the covered bank and on certain related items over a forward-looking planning horizon, taking into account all relevant exposures and activities.[5] Under the Stress Test Rule, the planning horizon is at least nine quarters, consisting of the fourth quarter of the current calendar year plus all four quarters of each of the two subsequent calendar years.

[3] *See id.*, at 62423.

[1] 77 FR 62417 (Oct. 15, 2012).

[2] 12 CFR 325.202(l).

[3] *Id.* at 325.205(b)(3).

[4] *Id.* at 325.201(c)(2) and 325.203(a).

[5] *Id.* at 325.205(a).

III. Scenarios

Scenarios are those sets of conditions that affect the U.S. economy or the financial condition of a covered bank that the Corporation annually determines are appropriate for use in the stress tests, including, but not limited to, baseline, adverse, and severely adverse scenarios.[6] The FDIC annually will determine scenarios that are appropriate for use under the Stress Test Rule. In conducting the stress test under the Stress Test Rule, each covered bank must use the scenarios provided by the FDIC.

Each scenario includes the values of the variables specified for each quarter over the stress test horizon. The FDIC expects that covered banks may not need to use all of the variables provided and may need to estimate relationships to identify other variables, such as those reflecting local economic conditions, from the values the FDIC provides. The FDIC will review the appropriateness of estimation processes and resulting estimates, or other modifications of variables, through its ongoing supervisory processes.

The variables specified for each scenario generally address economic activity, asset prices, and other measures of financial market conditions for the United States and key foreign countries. Variables that describe economic activity likely include, but are not be limited to, the growth rate of gross domestic product, the unemployment rate, and the inflation rate. The FDIC anticipates that the path of the unemployment rate in particular will be a key variable indicating the severity of economic stress, as this variable provides a simple and widely noted gauge of the state of the U.S. economy. This point is discussed further in this statement in connection with severely adverse scenarios.

Other variables may represent asset prices and financial market conditions, including interest rates. The FDIC expects to specify scenarios using a standard core set of variables, although variables may be added or deleted as the U.S. and global economic environment evolves. The FDIC will attempt to minimize additions, redefinitions, or re-specifications of the stress test variables from year to year, as the use of such new or different variables may potentially require covered banks to modify their testing systems.

The scenarios provided by the FDIC reflect at least three sets of economic and financial conditions, described in the rule as baseline, adverse, and severely adverse. The baseline broadly corresponds to the set of conditions expected to prevail over the term of the stress tests. The adverse and severely adverse scenarios introduce hypothetical stress conditions intended to test the safety and soundness of covered banks as well as their capital planning processes. The aim is to assess the covered banks' ability to identify and measure the risks they face under adverse conditions, and to ensure that appropriate amounts of capital exist to support those risks. The FDIC will evaluate both the adequacy of the projections and the processes used in the stress test. The FDIC expects covered banks to be able to maintain ready access to funding, continue operations, meet obligations to creditors and counterparties, and continue to serve as credit intermediaries under conditions that are significantly more adverse than expected.

The *baseline* scenario means a set of conditions that affect the U.S. economy or the financial condition of a covered bank, and that reflect the consensus views of the economic and financial outlook.[7] These views are based on information obtained from government agencies, other public sector organizations, and private sector forecasters as close to the date of the annual stress test as possible. The baseline may be based on one or more of the ''consensus'' forecasts produced by various organizations, although the FDIC may choose to depart from the consensus if necessary to provide a more appropriate baseline for the stress tests.

The *adverse* scenario means a set of conditions that affect the U.S. economy or the financial condition of a covered bank that are more adverse than those associated with the baseline scenario and may include trading or other additional components.[8] The adverse scenario may also be used to investigate other risks, such as including operational risks that the FDIC believes should be better understood or more closely monitored.

The *severely* adverse scenario means a set of conditions that affect the U.S. economy or the financial condition of a covered bank and that overall are more severe than those associated with the adverse scenario and may include trading or other additional components.[9] Three examples of severe recessions from recent U.S. experience may illustrate the anticipated depth of the severely adverse scenario as it relates to the unemployment rate:

- The 1973–75 recession, during which the unemployment rate increased 4.1 percentage points, from 4.9 percent in third quarter 1973 to 9.0 percent in second quarter 1975 (one quarter after the recession ended).
- The back-to-back recessions in 1980 and 1981–82, during which the unemployment rate increased 4.7 percentage points, from 6.1 percent in fourth quarter 1979 to 10.8 percent in fourth quarter 1982 (the last quarter of the recession).
- The 2007–09 recession, during which the unemployment rate increased 5.3 percentage points, from 4.7 percent in third quarter 2007 to 10.0 percent in fourth quarter 2009 (two quarters after the recession ended).

Other variables under the adverse and severely adverse scenarios would be expected to follow paths consistent with the depth and duration of previous recessions and with models of macroeconomic activity. The severely adverse scenario also may reflect other risks that are especially salient and that might not be captured by past recessions, including elevated levels of systemic risk.

The scenarios distributed by the FDIC for the stress tests cover at least nine quarters. In addition, the FDIC will generally publish scenarios that cover one year beyond the planning horizon of the stress test, to allow for the estimation of loan losses for the year following the stress planning horizon; this additional specification allows covered banks to determine adequate levels of loan loss reserves.

The FDIC believes that as a general matter all covered banks should use the same set of scenarios and planning horizon so that the FDIC can better compare results across institutions. To that end, the FDIC intends to provide one set of scenarios for use by all covered banks. However, the FDIC believes there may be circumstances that would warrant the use of different or additional scenarios or a planning horizon of more than nine quarters. Thus, under the Stress Test Rule, the FDIC reserves the authority to require a covered bank to use different or additional scenarios and/or planning horizons the Corporation may deem appropriate.[10] For example, a covered bank may conduct business activities or have risk exposures that would encounter stress under conditions that differ materially from those that would generate stress for other banks. The FDIC expects such situations to be rare

[6] *Id.* at 325.202(i).

[7] *Id.* at 325.202(c).

[8] *Id.* at 325.202(a).

[9] *Id.* at 325.202(j).

[10] *Id.* at 325.201(c).

and anticipates making every effort to distribute the same scenarios to all covered banks.

In addition to the minimum three scenarios, the FDIC may require a covered bank with significant trading activities to include factors related to trading and counterparty risk in its stress test. Typically, these factors might include additional shocks to specific market prices, interest rates, rate spreads, or other key market variables consistent with historical or hypothetical adverse market events.

IV. Development and Distribution

As one part of the process of developing scenarios, the FDIC will gather information from outside entities and develop themes for the stress test scenarios, including the identification of potentially material vulnerabilities or salient risks to the financial system, and consider potential paths for individual variables. The outside entities may include academic experts, staffs of international organizations, foreign supervisors, financial institutions that regularly provide forecasts, and other private sector risk analysts that regularly conduct stress tests based on U.S. and global economic and financial scenarios. The FDIC will use the information gathered in this manner to inform its consideration of potential risks and scenarios.

The Office of the Comptroller of the Currency (''OCC''), the Board of Governors of the Federal Reserve System (''Board''), and the FDIC (collectively, the ''Agencies'') expect to consult closely to develop scenarios for stress testing. Absent specific supervisory concerns, the FDIC anticipates that the annual stress test scenarios distributed by the FDIC will be the same as or nearly identical to the scenarios developed by the Board for the supervisory stress tests conducted by the Board under Section 165(i)(1). This would mean the same economic and financial variables following the same paths as used in the scenarios for the Board's supervisory stress tests.

Although the Agencies generally expect to consult closely on scenario development, they may have different views of risks that should be reflected in the stress test scenarios used by covered banks for the annual stress test. The FDIC may distribute scenarios to covered banks that differ in certain respects from those distributed by the OCC and the Board if necessary to better reflect specific FDIC concerns. The FDIC expects such situations to be extremely rare, however, and anticipates making every effort to avoid differences in the scenarios required by each agency.

The FDIC anticipates that the stress test scenarios will be revised annually as appropriate to ensure that each scenario remains relevant under prevailing economic and industry conditions. These yearly revisions will enable the scenarios to capture evolving risks and vulnerabilities. The need to ensure that scenarios do not become outdated because of economic and financial developments makes a lengthy process of review and comment concerning scenarios prior to distribution each year impractical. However, the process of consultation with the Board and the OCC, as well as the ongoing interaction of FDIC staff with public and private sector experts to obtain views on salient risks and to obtain suggestions for the behavior of key economic variables, should ensure that the stress conditions reflected in the scenarios are well suited to their purpose.

The scenario development process culminates with the distribution of the scenarios to all covered banks no later than November 15th of each year. The scenario descriptions provided to covered banks will include values for economic and financial variables depicting the paths those variables follow under the scenarios. The FDIC believes that distribution of the scenarios no later than November 15th aligns with similar processes at the OCC and the Board.

Federal Deposit Insurance Corporation.

Dated at Washington, DC, this 14th day of November 2012.

Valerie J. Best,

Assistant Executive Secretary.

[FR Doc. 2012–28104 Filed 11–19–12; 8:45 am]

BILLING CODE 6714–01–P

DEPARTMENT OF TRANSPORTATION

Federal Aviation Administration

14 CFR Part 39

[Docket No. FAA–2012–0528; Directorate Identifier 2011–SW–068–AD; Amendment 39–17261; AD 2012–23–05]

RIN 2120–AA64

Airworthiness Directives; Eurocopter Deutschland Helicopters

AGENCY: Federal Aviation Administration (FAA), DOT.

ACTION: Final rule.

SUMMARY: We are adopting a new airworthiness directive (AD) for all Eurocopter Deutschland GmbH (ECD) Model MBB–BK117 C–2 helicopters with certain Generator Control Units (GCU) installed. This AD requires replacing the GCUs. This AD was prompted by reports of internal short circuits in certain GCUs. These actions are intended to prevent a short circuit, which could result in a loss of electrical generating power, loss of systems required for continued safe flight and landing, and subsequent loss of control of the helicopter.

DATES: This AD is effective December 26, 2012.

ADDRESSES: For service information identified in this AD, contact American Eurocopter Corporation, 2701 N. Forum Drive, Grand Prairie, TX 75052, telephone (972) 641–0000 or (800) 232–0323, fax (972) 641–3775, or at *http://www.eurocopter.com/techpub.* You may review the referenced service information at the FAA, Office of the Regional Counsel, Southwest Region, 2601 Meacham Blvd., Room 663, Fort Worth, Texas 76137.

Examining the AD Docket

You may examine the AD docket on the Internet at *http://www.regulations.gov* or in person at the Docket Operations Office between 9 a.m. and 5 p.m., Monday through Friday, except Federal holidays. The AD docket contains this AD, any incorporated-by-reference service information, the economic evaluation, any comments received, and other information. The street address for the Docket Operations Office (phone: 800–647–5527) is U.S. Department of Transportation, Docket Operations Office, M–30, West Building Ground Floor, Room W12–140, 1200 New Jersey Avenue SE., Washington, DC 20590.

FOR FURTHER INFORMATION CONTACT: George Schwab, Aviation Safety Engineer, FAA, Rotorcraft Directorate, Safety Management Group, 2601 Meacham Blvd., Fort Worth, Texas 76137; telephone (817) 222–5114; email *george.schwab@faa.gov.*

SUPPLEMENTARY INFORMATION:

Discussion

On May 22, 2012, at 77 FR 30230, the **Federal Register** published our notice of proposed rulemaking (NPRM), which proposed to amend 14 CFR part 39 to include an AD that would apply to ECD Model MBB–BK117 C–2 helicopters with a GCU, part number (P/N) 51530–021EI with no modification (MOD), MOD A, or MOD B installed. That NPRM proposed to require replacing the GCU within 300 hours time-in-service (TIS) or 6 months, whichever occurred earlier. The proposed requirements were intended to prevent loss of electrical generating power, resulting in the loss

of systems required for continued safe flight and landing, and subsequent loss of control of the helicopter.

The European Aviation Safety Agency (EASA), which is the Technical Agent for the Member States of the European Union, has issued EASA AD No. 2011–0149R1, dated September 30, 2011 (AD 2011–0149R1), to correct an unsafe condition for the Eurocopter Deutschland GmbH Model MBB–BK117 C–2 helicopters. EASA advises that during an acceptance test procedure of a GCU, a short circuit caused by a manufacturing discrepancy occurred within the unit. According to EASA, all P/N 51530–021EI ''no MOD,'' ''MOD A,'' and ''MOD B'' GCUs are potentially affected by this discrepancy. To address this potential unsafe condition, EASA issued AD No. 2011–0149, dated August 19, 2011, to identify and replace each affected GCU with an airworthy GCU. Since issuing that AD, ECD demonstrated that helicopters modified in accordance with ECD Alert Service Bulletin (ASB) MBB BK117 C–2–24A–008, Revision 1, dated August 29, 2011, have a much lower risk of losing electrical generating power from a faulty generator control unit. EASA then revised AD No. 2011–0149 and issued AD 2011–0149R1 to allow an extended compliance time for helicopters modified in accordance with the ECD ASB.

Comments

We gave the public the opportunity to participate in developing this AD, but we did not receive any comments on the NPRM (77 FR 30230, May 22, 2012).

FAA's Determination

These helicopters have been approved by the aviation authority of Germany and are approved for operation in the United States. Pursuant to our bilateral agreement with Germany, EASA, its technical representative, has notified us of the unsafe condition described in the EASA AD. We are issuing this AD because we evaluated all information provided by EASA and determined the unsafe condition exists and is likely to exist or develop on other helicopters of these same type designs and that air safety and the public interest require adopting the AD requirements as proposed.

Differences Between This AD and the EASA AD

The EASA AD allows a compliance time of 1,500 flight hours for helicopters previously modified by ECD ASB MBB BK117 C–2–24A–008 Revision 1, while this AD requires compliance within the next 300 hours TIS or 6 months, whichever occurs first, for all affected helicopters.

Related Service Information

ECD has issued ASB MBB–BK117 C–2–24A–010 Revision 2, dated September 14, 2011, which specifies removing any GCU with P/N 51530–021EI with no modification (MOD), MOD A, or MOD B, and replacing it with a GCU P/N 51530–021EI MOD C or later MOD. EASA classified this ASB as mandatory and issued AD 2011–0149R1 to ensure the continued airworthiness of these helicopters.

Costs of Compliance

We estimate that this AD will affect 104 helicopters of U.S. Registry. We estimate that operators may incur the following costs in order to comply with this AD. Replacing a GCU with an airworthy GCU will require about 2 work hours at an average labor rate of $85 per hour. Required parts will cost $7,130, for a total cost per helicopter of $7,300.

Authority for This Rulemaking

Title 49 of the United States Code specifies the FAA's authority to issue rules on aviation safety. Subtitle I, section 106, describes the authority of the FAA Administrator. Subtitle VII: Aviation Programs, describes in more detail the scope of the Agency's authority.

We are issuing this rulemaking under the authority described in Subtitle VII, Part A, Subpart III, Section 44701: ''General requirements.'' Under that section, Congress charges the FAA with promoting safe flight of civil aircraft in air commerce by prescribing regulations for practices, methods, and procedures the Administrator finds necessary for safety in air commerce. This regulation is within the scope of that authority because it addresses an unsafe condition that is likely to exist or develop on helicopters identified in this rulemaking action.

Regulatory Findings

This AD will not have federalism implications under Executive Order 13132. This AD will not have a substantial direct effect on the States, on the relationship between the national government and the States, or on the distribution of power and responsibilities among the various levels of government.

For the reasons discussed above, I certify that this AD:

(1) Is not a ''significant regulatory action'' under Executive Order 12866;

(2) Is not a ''significant rule'' under DOT Regulatory Policies and Procedures (44 FR 11034, February 26, 1979);

(3) Will not affect intrastate aviation in Alaska to the extent that it justifies making a regulatory distinction; and

(4) Will not have a significant economic impact, positive or negative, on a substantial number of small entities under the criteria of the Regulatory Flexibility Act.

We prepared an economic evaluation of the estimated costs to comply with this AD and placed it in the AD docket.

List of Subjects in 14 CFR Part 39

Air transportation, Aircraft, Aviation safety, Incorporation by reference, Safety.

Adoption of the Amendment

Accordingly, under the authority delegated to me by the Administrator, the FAA amends 14 CFR part 39 as follows:

PART 39—AIRWORTHINESS DIRECTIVES

■ 1. The authority citation for part 39 continues to read as follows:

Authority: 49 U.S.C. 106(g), 40113, 44701.

§ 39.13 [Amended]

■ 2. The FAA amends § 39.13 by adding the following new airworthiness directive (AD):

2012–23–05 Eurocopter Deutschland GMBH: Amendment 39–17261; Docket No. FAA–2012–0528; Directorate Identifier 2011–SW–068–AD.

(a) Applicability

This AD applies to Model MBB–BK117 C–2 helicopters with a generator control unit (GCU), part number (P/N) 51530–021EI with no modification (MOD), MOD A, or MOD B installed, certificated in any category.

(b) Unsafe Condition

This AD defines the unsafe condition as an internal short circuit in certain GCUs. This condition could result in loss of electrical generating power, resulting in the loss of systems required for continued safe flight and landing, and subsequent loss of control of the helicopter.

(c) Effective Date

This AD becomes effective December 26, 2012.

(d) Compliance

You are responsible for performing each action required by this AD within the specified compliance time unless it has already been accomplished prior to that time.

(e) Required Actions

(1) Within the next 300 hours time-in-service or 6 months, whichever occurs first, replace all GCUs with no MOD, MOD A, or MOD B with an airworthy GCU.

(2) Do not install a GCU P/N 51530–021–EI with no MOD, MOD A, or MOD B on any helicopter.

(f) Alternative Methods of Compliance (AMOCs)

(1) The Manager, Safety Management Group, FAA, may approve AMOCs for this AD. Send your proposal to: George Schwab, Aviation Safety Engineer, FAA, Rotorcraft Directorate, Safety Management Group, 2601 Meacham Blvd., Fort Worth, Texas 76137; telephone (817) 222–5114; email *george.schwab@faa.gov.*

(2) For operations conducted under a 14 CFR part 119 operating certificate or under 14 CFR part 91, subpart K, we suggest that you notify your principal inspector, or lacking a principal inspector, the manager of the local flight standards district office or certificate holding district office, before operating any aircraft complying with this AD through an AMOC.

(g) Additional Information

(1) Eurocopter Deutschland GmbH Alert Service Bulletin MBB–BK117 C–2–24A–010 Revision 2, dated September 14, 2011, which is not incorporated by reference, contains additional information about the subject of this AD.

(2) For service information identified in this AD, contact American Eurocopter Corporation, 2701 N. Forum Drive, Grand Prairie, TX 75052, telephone (972) 641–0000 or (800) 232–0323, fax (972) 641–3775, or at *http://www.eurocopter.com/techpub.* You may review a copy of the service information at the FAA, Office of the Regional Counsel, Southwest Region, 2601 Meacham Blvd., Room 663, Fort Worth, Texas 76137.

(3) The subject of this AD is addressed in European Aviation Safety Agency AD No. 2011–0149R1, dated September 30, 2011.

(h) Subject

Joint Aircraft Service Component (JASC) Code: 2436: DC Generator Control Unit.

Issued in Fort Worth, Texas, on October 30, 2012.

Kim Smith,

Directorate Manager, Rotorcraft Directorate, Aircraft Certification Service.

[FR Doc. 2012–28039 Filed 11–19–12; 8:45 am]

BILLING CODE 4910–13–P

DEPARTMENT OF TRANSPORTATION

Federal Aviation Administration

14 CFR Part 39

[Docket No. FAA–2012–1188; Directorate Identifier 2012–SW–049–AD; Amendment 39–17254; AD 2012–10–53]

RIN 2120–AA64

Airworthiness Directives; Eurocopter Deutschland GmbH Helicopters

AGENCY: Federal Aviation Administration (FAA), Department of Transportation (DOT).

ACTION: Final rule; request for comments.

SUMMARY: We are adopting a new airworthiness directive (AD) for Eurocopter Deutschland GmbH (ECD) Model EC135 P1, EC135 P2, EC135 P2+, EC135 T1, EC135 T2, and EC135 T2+ helicopters. This is the **Federal Register** publication of an Emergency AD (EAD) that was previously sent to all known owners and operators of these helicopters. That EAD superseded an earlier related EAD. This AD requires, before further flight and at specified intervals, checking and inspecting the upper and lower main rotor hub (MRH) shaft flanges for a crack, and inspecting the lower hub-shaft flange bolt attachment areas for a crack. This AD is prompted by three reported incidents of cracking on the lower hub-shaft flanges of EC135 model helicopters. These actions are intended to detect a crack on the hub-shaft flange, which if not corrected could result in failure of the MRH and subsequent loss of control of the helicopter.

DATES: This AD becomes effective December 5, 2012 to all persons except those persons to whom it was made immediately effective by Emergency AD No. 2012–10–53, issued on May 18, 2012, which contained the requirements of this AD.

We must receive comments on this AD by January 22, 2013.

ADDRESSES: You may send comments by any of the following methods:

- *Federal eRulemaking Docket:* Go to *http://www.regulations.gov.* Follow the online instructions for sending your comments electronically.
- *Fax:* 202–493–2251.
- *Mail:* Send comments to the U.S. Department of Transportation, Docket Operations, M–30, West Building Ground Floor, Room W12–140, 1200 New Jersey Avenue SE., Washington, DC 20590–0001.
- *Hand Delivery:* Deliver to the ''Mail'' address between 9 a.m. and 5 p.m., Monday through Friday, except Federal holidays.

Examining the AD Docket

You may examine the AD docket on the Internet at *http://www.regulations.gov* or in person at the Docket Operations Office between 9 a.m. and 5 p.m., Monday through Friday, except Federal holidays. The AD docket contains this AD, the economic evaluation, any comments received, and other information. The street address for the Docket Operations Office (telephone 800–647–5527) is in the **ADDRESSES** section. Comments will be available in the AD docket shortly after receipt.

For service information identified in this AD, contact American Eurocopter Corporation, 2701 N. Forum Drive, Grand Prairie, Texas 75052; telephone (972) 641–0000 or (800) 232–0323; fax (972) 641–3775; or at *http://www.eurocopter.com/techpub.* You may review the referenced service information at the FAA, Office of the Regional Counsel, Southwest Region, 2601 Meacham Blvd., Room 663, Fort Worth, Texas 76137.

FOR FURTHER INFORMATION CONTACT: Gary Roach, Aviation Safety Engineer, Regulations and Policy Group, Rotorcraft Directorate, FAA, 2601 Meacham Blvd., Fort Worth, Texas 76137; telephone (817) 222–5110; email *gary.b.roach@faa.gov.*

SUPPLEMENTARY INFORMATION:

Comments Invited

This AD is a final rule that involves requirements affecting flight safety, and we did not provide you with notice and an opportunity to provide your comments prior to it becoming effective. However, we invite you to participate in this rulemaking by submitting written comments, data, or views. We also invite comments relating to the economic, environmental, energy, or federalism impacts that resulted from adopting this AD. The most helpful comments reference a specific portion of the AD, explain the reason for any recommended change, and include supporting data. To ensure the docket does not contain duplicate comments, commenters should send only one copy of written comments, or if comments are filed electronically, commenters should submit them only one time. We will file in the docket all comments that we receive, as well as a report summarizing each substantive public contact with FAA personnel concerning this rulemaking during the comment period. We will consider all the comments we receive and may conduct additional rulemaking based on those comments.

Discussion

On May 15, 2012, we issued Emergency AD 2012–10–51 for the ECD Model EC135 series helicopters to detect a crack on the MRH shaft flange. Emergency AD 2012–10–51 required a pilot check of the lower MRH shaft flange for a crack or deformed blade attachment bolt safety pins before the first flight of each day, inspecting the upper and lower MRH shaft flanges for a crack within 5 hours time-in-service (TIS), and replacing the MRH shaft if there is a crack.

After we issued Emergency AD 2012–10–51, the European Aviation Safety

Agency (EASA), which is the Technical Agent for the Member States of the European Union, issued EASA AD No. 2012–0085–E, dated May 17, 2012 (2012–0085–E), which superseded EASA AD No. 2012–0041R1, dated March 15, 2012 (2012–0041R1), to correct an unsafe condition for the ECD Model EC 135 series helicopters. EASA advises that since issuing 2012–0041R1, further cracks have been detected on two other helicopters during the pre-flight checks. These are the same two cracks that prompted our Emergency AD. However, EASA also states that identification of deformed safety pins may not be sufficient to detect a crack on the MRH shaft flange. ECD is investigating the cause of the cracks and has developed new inspection procedures with further corrective actions. Therefore, we issued superseding Emergency AD 2012–10–53 on May 18, 2012, to detect a crack on the MRH shaft flange, which if not corrected could result in failure of the MRH and subsequent loss of control of the helicopter.

When we issued superseding Emergency AD 2012–10–53, we included additional part-numbered MRH shafts that should have been included in EAD 2012–10–51, changed the daily checks to recurring checks at intervals not to exceed 6 hours TIS, added a 10 hour-TIS recurring inspection on MRH shafts with 400 or more hours TIS, and removed the check of the blade attachment bolt safety pins for deformation.

This is the **Federal Register** publication of Emergency AD 2012–10–53 as Amendment 39–17254; AD 2012–10–53. There are no differences in the regulatory language or requirements between this AD and that Emergency AD as it was previously sent to all known owners and operators of these helicopters.

FAA's Determination

These helicopters have been approved by the aviation authority of Germany and are approved for operation in the United States. Pursuant to our bilateral agreement with Germany, EASA, its technical representative, has notified us of the unsafe condition described in the EASA AD. We are issuing this AD because we evaluated all information provided by EASA and determined the unsafe condition exists and is likely to exist or develop on other helicopters of these same type designs.

Related Service Information

Eurocopter has issued Emergency Alert Service Bulletin EC135–62A–029, Revision 2, dated May 17, 2012 (EC135–62A–029), which describes procedures for conducting a repetitive check of the visible area of the upper and lower MRH shaft flanges and a repetitive inspection of the area of the blade bolts lower MRH shaft flange.

AD Requirements

This AD supersedes Emergency AD 2012–10–51 and requires the following:

- Before further flight, and thereafter at intervals not to exceed 6 hours TIS, checking the lower MRH shaft flange and the visible area of the upper MRH shaft flange for a crack. An owner/operator (pilot) may perform this required visual check and must enter compliance with the applicable paragraph of this AD into the helicopter maintenance records in accordance with 14 CFR 43.9(a)(1)–(4) and 91.417(a)(2)(v). A pilot may perform this check because it involves only looking at the visible area of the MRH shaft flanges and can be performed equally well by a pilot or a mechanic. This check is an exception to our standard maintenance regulations.
- For an MRH shaft with 400 or more hours TIS, within 10 hours TIS, and thereafter at intervals not to exceed 10 hours TIS, removing the rotor-hub cap; inspecting the upper and lower hub-shaft flanges for a crack; removing the blade attachment bolt safety pins, nut, and washer; and inspecting the lower hub-shaft flange bolt attachment areas for a crack.
- If there is a crack, replacing the MRH shaft.

Differences Between This AD and the EASA AD

The EASA AD identifies ECD Alert Service Bulletin EC135–62A–029, Revision 1, dated May 16, 2012. This AD references Revision 2. The EASA AD requires you to report the findings and sending any cracked MRH to ECD, and this AD does not. The EASA AD requires the initial check within 3 days, while this AD requires the check before further flight.

Interim Action

We consider this AD to be an interim action. Eurocopter is currently developing a modification that will address the unsafe condition identified in this AD. Once this modification is developed, approved, and available, we might consider additional rulemaking.

Costs of Compliance

We estimate that this AD will affect 244 helicopters of U.S. Registry. We estimate inspecting the MRH shaft flanges will require 2.5 hours at an average labor rate of $85 per work-hour, for a total cost per helicopter of $212 and a total cost to U.S. operators of $51,850 per inspection cycle. Replacing an MRH shaft will require about 8 hours at an average labor rate of $85 per work-hour, and required parts will cost $55,715, for a total cost per helicopter of $56,395.

FAA's Justification and Determination of the Effective Date

Providing an opportunity for public comments prior to adopting these AD requirements would delay implementing the safety actions needed to correct this known unsafe condition. Therefore, we find that the risk to the flying public justifies waiving notice and comment prior to the adoption of this rule because the required corrective actions must be accomplished before further flight.

Since an unsafe condition exists that requires the immediate adoption of this AD, we determined that notice and opportunity for public comment before issuing this AD are impracticable and that good cause exists for making this amendment effective in less than 30 days.

Authority for This Rulemaking

Title 49 of the United States Code specifies the FAA's authority to issue rules on aviation safety. Subtitle I, section 106, describes the authority of the FAA Administrator. ''Subtitle VII: Aviation Programs,'' describes in more detail the scope of the Agency's authority.

We are issuing this rulemaking under the authority described in ''Subtitle VII, Part A, Subpart III, Section 44701: General requirements.'' Under that section, Congress charges the FAA with promoting safe flight of civil aircraft in air commerce by prescribing regulations for practices, methods, and procedures the Administrator finds necessary for safety in air commerce. This regulation is within the scope of that authority because it addresses an unsafe condition that is likely to exist or develop on products identified in this rulemaking action.

Regulatory Findings

We determined that this AD will not have federalism implications under Executive Order 13132. This AD will not have a substantial direct effect on the States, on the relationship between the national Government and the States, or on the distribution of power and responsibilities among the various levels of government.

For the reasons discussed, I certify that this AD:

1. Is not a ''significant regulatory action'' under Executive Order 12866;

2. Is not a ''significant rule'' under DOT Regulatory Policies and Procedures (44 FR 11034, February 26, 1979);

3. Will not affect intrastate aviation in Alaska to the extent that it justifies making a regulatory distinction; and

4. Will not have a significant economic impact, positive or negative, on a substantial number of small entities under the criteria of the Regulatory Flexibility Act.

We prepared an economic evaluation of the estimated costs to comply with this AD and placed it in the AD docket.

List of Subjects in 14 CFR Part 39

Air transportation, Aircraft, Aviation safety, Incorporation by reference, Safety.

Adoption of the Amendment

Accordingly, under the authority delegated to me by the Administrator, the FAA amends 14 CFR part 39 as follows:

PART 39—AIRWORTHINESS DIRECTIVES

■ 1. The authority citation for part 39 continues to read as follows:

Authority: 49 U.S.C. 106(g), 40113, 44701.

§ 39.13 [Amended]

■ 2. The FAA amends § 39.13 by adding the following new airworthiness directive (AD):

2012–10–53 Eurocopter Deutschland GMBH (ECD): Amendment 39–17254; Docket No. FAA–2012–1188; Directorate Identifier 2012–SW-049–AD.

(a) Applicability

This AD applies to Model EC135 P1, EC135 P2, EC135 P2+, EC135 T1, EC135 T2, and EC135 T2+ helicopters, with a main rotor hub (MRH) shaft, part number (P/N) L623M1006101, L623M1206101, L623M1006102, L623M1206102, L623M1006103, or L623M1206103 installed, certificated in any category.

(b) Unsafe Condition

This AD defines the unsafe condition as a crack in the MRH shaft flange, which could result in failure of the MRH shaft and subsequent loss of control of the helicopter.

(c) Effective Date

This AD becomes effective December 5, 2012 to all persons except those persons to whom it was made immediately effective by Emergency AD No. 2012–10–53, issued on May 18, 2012, which contained the requirements of this AD.

(d) Other Affected ADs

This AD supersedes Emergency AD No. 2012–10–51, dated May 15, 2012.

(e) Compliance

You are responsible for performing each action required by this AD within the specified compliance time.

(f) Required Actions

(1) Before further flight, and thereafter at intervals not to exceed 6 hours time-in-service (TIS), check the MRH shaft lower flange and the visible area of the MRH shaft upper flange for a crack. Figures 1 and 2 to Paragraph (f)(1) of this AD are examples of cracks that have been discovered in the MRH shaft lower flange. The actions required by this paragraph may be performed by the owner/operator (pilot) holding at least a private pilot certificate, and must be entered into the aircraft records showing compliance with this AD in accordance with 14 CFR 43.9 (a)(1)-(4) and 14 CFR 91.417(a)(2)(v). The record must be maintained as required by 14 CFR 91.417, 121.380, or 135.439.

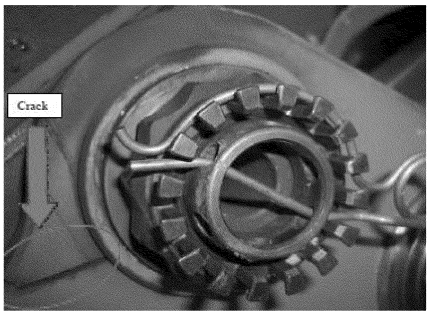

Figure 1 to Paragraph (f)(1)

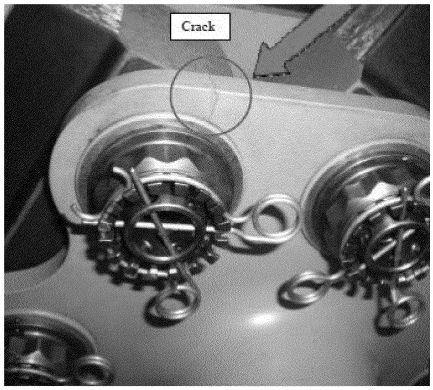

Figure 2 to Paragraph (f)(1)

(2) For MRH shafts with 400 or more hours TIS, within 10 hours TIS, and thereafter at intervals not to exceed 10 hours TIS:

(i) Remove rotor-hub cap.

(ii) Clean the upper and lower MRH shaft flange as depicted in Figure 3 to Paragraph (f)(2)(ii) of this AD and visually inspect for a crack.

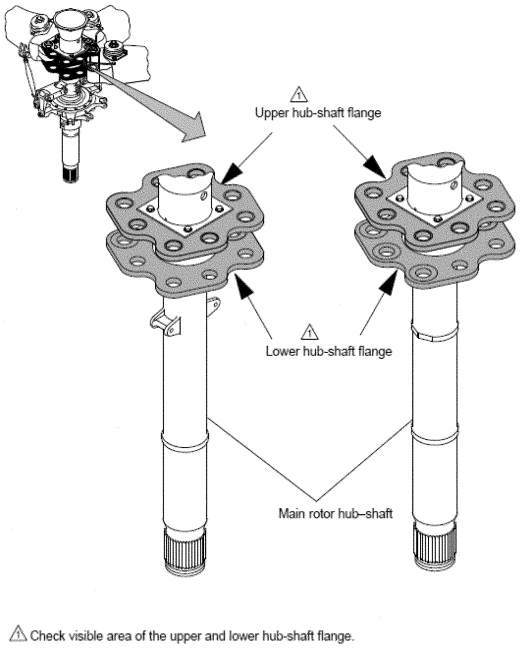

Figure 3 to Paragraph (f)(2)(ii)

(iii) Remove the safety pins and nut from each blade bolt and the washers from the lower MRH shaft flange.

(iv) Clean the blade bolt attachment area.

(v) Using a 10X or higher power magnification, inspect all lower MRH shaft flange blade bolt attachment areas for a crack as shown in Figure 4 to Paragraph (f)(2)(v) of this AD.

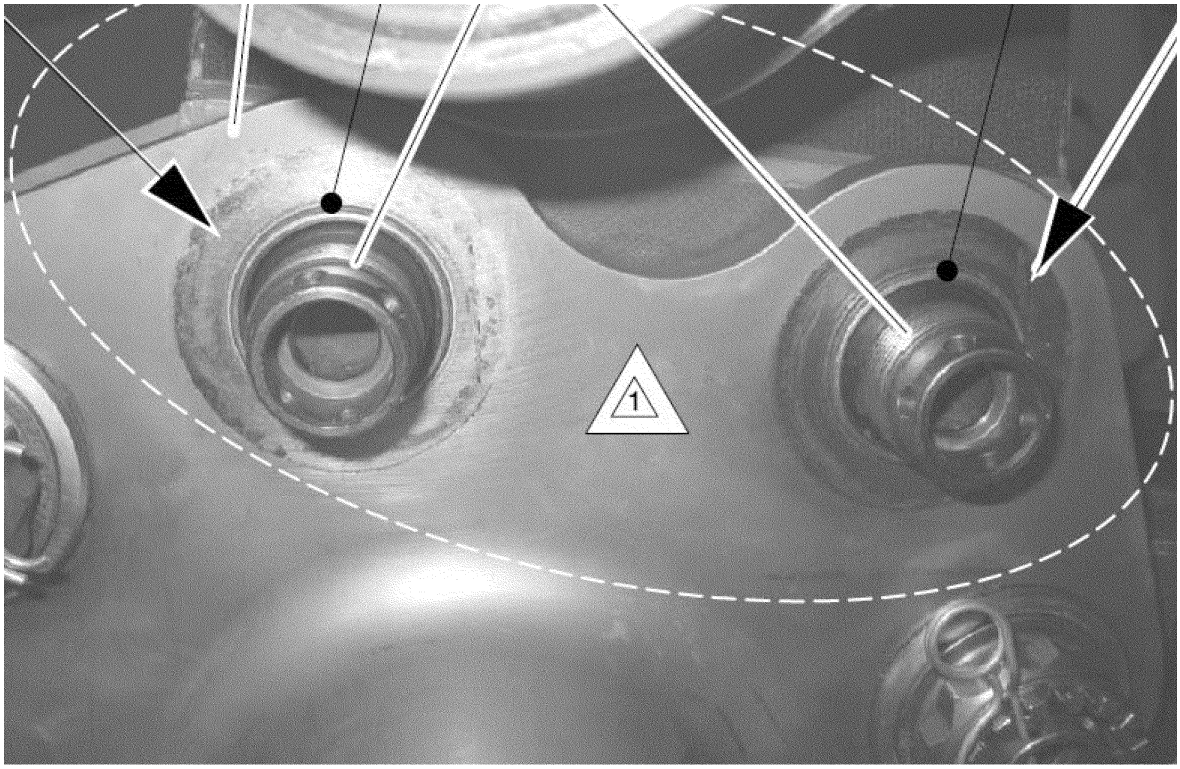

Figure 4 to Paragraph (f)(2)(v)

(3) If there is a crack in the upper or lower MRH shaft flange, before further flight, replace the MRH shaft. Replacing the MRH shaft with an MRH shaft having a part number listed in the applicability of this AD does not constitute terminating action for the requirements of this AD.

(g) Alternative Methods of Compliance (AMOCs)

(1) The Manager, Safety Management Group, FAA, may approve AMOCs for this AD. Send your proposal to: Gary Roach, Aviation Safety Engineer, Regulations and Policy Group, Rotorcraft Directorate, FAA, 2601 Meacham Blvd., Fort Worth, Texas 76137; telephone (817) 222–5110; email *gary.b.roach@faa.gov.*

(2) For operations conducted under a 14 CFR part 119 operating certificate or under 14 CFR part 91, subpart K, we suggest that you notify your principal inspector, or lacking a principal inspector, the manager of the local flight standards district office or certificate holding district office, before operating any aircraft complying with this AD through an AMOC.

(h) Additional Information

(1) Eurocopter Emergency Alert Service Bulletin EC135–62A–029, Revision 2, dated May 17, 2012, which is not incorporated by reference, contains additional information about the subject of this AD. For service information identified in this AD, contact American Eurocopter Corporation, 2701 N. Forum Drive, Grand Prairie, Texas 75052; telephone (972) 641–0000 or (800) 232–0323; fax (972) 641–3775; or at *http://www.eurocopter.com/techpub.* You may review this service information at the FAA, Office of the Regional Counsel, Southwest Region, 2601 Meacham Blvd., Room 663, Fort Worth, Texas 76137.

(2) The subject of this AD is addressed in European Aviation Safety Agency AD No. 2012–0085–E, dated May 17, 2012.

(i) Subject

Joint Aircraft Service Component (JASC) Code: 6220, Main Rotor Head.

Issued in Fort Worth, Texas, on October 30, 2012.

Kim Smith,

Directorate Manager, Rotorcraft Directorate, Aircraft Certification Service.

[FR Doc. 2012–28100 Filed 11–19–12; 8:45 am]

BILLING CODE 4910–13–P

DEPARTMENT OF HOMELAND SECURITY

Coast Guard

33 CFR Part 117

[Docket No. USCG–2012–0994]

Drawbridge Operation Regulation; Barataria Bayou, Lafitte, LA

AGENCY: Coast Guard, DHS.

ACTION: Notice of temporary deviation from regulations.

SUMMARY: The Coast Guard has issued a temporary deviation from the operating schedule that governs the LA 302 (Kerner) swing span bridge across the Barataria Bayou, mile 35.7, at Lafitte, Louisiana. The deviation is necessary to allow a movie production crew to safely film at the bridge site. This deviation allows the bridge to remain closed to navigation for 12 hours on two separate nights.

DATES: This deviation is effective from 6 p.m. on November 28 through 6 a.m. November 30, 2012.

ADDRESSES: Documents mentioned in this preamble as being available in the docket are part of docket USCG–2012–0994 and are available online by going to *http://www.regulations.gov,* inserting USCG–2012–0994 in the ''Keyword'' box and then clicking ''Search''. They are also available for inspection or copying at the Docket Management Facility (M–30), U.S. Department of Transportation, West Building Ground Floor, Room W12–140, 1200 New Jersey Avenue SE., Washington, DC 20590, between 9 a.m. and 5 p.m., Monday through Friday, except Federal holidays.

FOR FURTHER INFORMATION CONTACT: If you have questions on this rule, call or email Kay Wade, Bridge Branch, Coast Guard; telephone 504–671–2128, email *Kay.B.Wade@uscg.mil.* If you have questions on viewing the docket, call Renee V. Wright, Program Manager, Docket Operations, telephone 202–366–9826.

SUPPLEMENTARY INFORMATION: The Louisiana Department of Transportation and Development has requested a temporary deviation from the operating schedule of the swing span bridge across the Barataria Bayou at mile 35.7 in Lafitte, Jefferson Parish, Louisiana. The vertical clearance of the bridge in the closed-to-navigation position is 7.2 feet above Mean High Water, elevation 0.8 feet and unlimited in the open-to-navigation position. Vessels will not be allowed to pass under the bridge during the closure.

In accordance with 33 CFR 117.5, the bridge opens on signal for the passage of vessels. This deviation allows the swing span of the bridge to remain closed to navigation from 6 p.m. to 6 a.m. on the evenings of Wednesday, November 28, 2012 and Thursday, November 29, 2012.

The closure is necessary in order to safely allow movie production crews to film at the bridge site. Notices will be published in the Eighth Coast Guard District Local Notice to Mariners and will be broadcast via the Coast Guard Broadcast Notice to Mariners System.

Navigation on the waterway consists of commercial and recreational fishing vessels, oil industry supply boats, crew boats, tug boats and standard barges. No alternate routes are available for the passage of vessels; however, the closure was coordinated with waterway interests who have indicated that they will be able to adjust their operations around the proposed schedule.

The bridge will be able to open in the event of an emergency.

Due to prior experience and coordination with waterway users, it has been determined that this closure will not have a significant effect on vessels that use the waterway.

In accordance with 33 CFR 117.35(e), the drawbridge must return to its regular operating schedule immediately at the end of the designated time period. This deviation from the operating regulations is authorized under 33 CFR 117.35.

Dated: November 2, 2012.

David M. Frank,

Bridge Administrator.

[FR Doc. 2012–28126 Filed 11–19–12; 8:45 am]

BILLING CODE 9110–04–P

DEPARTMENT OF HOMELAND SECURITY

Coast Guard

33 CFR Part 117

[Docket No. USCG–2012–0911]

Drawbridge Operation Regulation; Thea Foss Waterway Previously Known as City Waterway, Tacoma, WA

AGENCY: Coast Guard, DHS.

ACTION: Notice of temporary deviation from regulations; request for comments.

SUMMARY: The Coast Guard has issued a temporary deviation from the operating schedule that governs the Murray Morgan Bridge, also known as the South 11th Street Bridge, across the Thea Foss Waterway, mile 0.6, previously known as City Waterway, at Tacoma, WA. This deviation will test a change to the drawbridge operating schedule to determine whether a permanent change to the schedule is needed. This test deviation will modify the existing regulation and add an advance notification requirement for obtaining bridge openings during designated times. The Coast Guard has also published a notice of proposed rulemaking (NPRM) under docket number USCG–2012–0911 to which comments may be posted

DATES: This deviation is effective from 7 a.m. on January 1, 2013 through 8 a.m. June 15, 2013. Comments and related material must reach the Coast Guard on or before [Insert date 45 days after date of publication in the **Federal Register**].

ADDRESSES: You may submit comments identified by docket number USCG–2012–0911 using any one of the following methods:

(1) *Federal eRulemaking Portal: http://www.regulations.gov.*

(2) *Fax:* 202–493–2251.

(3) *Mail or Delivery:* Docket Management Facility (M–30), U.S. Department of Transportation, West Building Ground Floor, Room W12–140, 1200 New Jersey Avenue SE., Washington, DC 20590–0001. Deliveries accepted between 9 a.m. and 5 p.m., Monday through Friday, except Federal holidays. The telephone number is 202–366–9329.

See the ''Public Participation and Request for Comments'' portion of the **SUPPLEMENTARY INFORMATION** section below for instructions on submitting comments. To avoid duplication, please use only one of these four methods.

FOR FURTHER INFORMATION CONTACT: If you have questions on this rule, call or email the Bridge Administrator, Coast Guard Thirteenth District; telephone 206–220–7282 email *randall.d.overton@uscg.mil.* If you have questions on viewing the docket, call Renee V. Wright, Program Manager, Docket Operations, telephone 202–366–9826.

SUPPLEMENTARY INFORMATION:

A. Public Participation and Request for Comments

We encourage you to participate in this rulemaking by submitting comments and related materials. All comments received will be posted, without change, to *http://www.regulations.gov* and will include any personal information you have provided.

1. Submitting Comments

If you submit a comment, please include the docket number for this rulemaking (USCG–2012–0911), indicate the specific section of this document to which each comment applies, and provide a reason for each suggestion or recommendation. You may submit your comments and material online (*http://www.regulations.gov*), or by fax, mail or hand delivery, but please use only one of these means. If you submit a comment online via *http://www.regulations.gov,* it will be considered received by the Coast Guard when you successfully transmit the comment. If you fax, hand deliver, or mail your comment, it will be considered as having been received by the Coast Guard when it is received at the Docket Management Facility. We recommend that you include your name and a mailing address, an email address, or a phone number in the body of your document so that we can contact you if we have questions regarding your submission.

To submit your comment online, go to *http://www.regulations.gov*, click on the ''submit a comment'' box, which will then become highlighted in blue. In the ''Keyword'' box insert ''USCG–2012–0911,'' click ''Search,'' and then click on the balloon shape in the ''Actions'' column. If you submit your comments by mail or hand delivery, submit them in an unbound format, no larger than 8½ by 11 inches, suitable for copying and electronic filing. If you submit them by mail and would like to know that they reached the Facility, please enclose a stamped, self-addressed postcard or envelope. We will consider all comments and material received during the comment period and may change the rule based on your comments.

2. Viewing Comments and Documents

To view comments, as well as documents mentioned in this preamble as being available in the docket, go to *http://www.regulations.gov*, type the docket number ''USCG–2012–0911'' in the ''Search'' box and click ''Search.'' Click the ''Open Docket Folder'' on the line associated with this rulemaking. You may also visit the Docket Management Facility in Room W12–140 on the ground floor of the Department of Transportation West Building, 1200 New Jersey Avenue SE., Washington, DC 20590, between 9 a.m. and 5 p.m., Monday through Friday, except Federal holidays. We have an agreement with the Department of Transportation to use the Docket Management Facility.

3. Privacy Act

Anyone can search the electronic form of comments received into any of our dockets by the name of the individual submitting the comment (or signing the comment, if submitted on behalf of an association, business, labor union, etc.). You may review a Privacy Act notice regarding our public dockets in the January 17, 2008, issue of the **Federal Register** (73 FR 3316).

4. Public Meeting

We do not now plan to hold a public meeting. But you may submit a request for one using one of the four methods specified under **ADDRESSES**. Please explain why one would be beneficial. If we determine that one would aid this rulemaking, we will hold one at a time and place announced by a later notice in the **Federal Register**.

B. Basis and Purpose

The Coast Guard, at the request of the City of Tacoma, proposes to change the regulation which governs the operating schedule of the Murray Morgan Bridge. This temporary deviation will test three separate changes requested by the City of Tacoma.

The first change requires that for bridge openings needed between 10 p.m. and 8 a.m., notification be made no later than 8 p.m. prior to the desired opening. This differs from the existing regulation in that presently the bridge is required to open at all times (except during authorized closure periods) provided two hours advance notice is given. This deviation to the regulation which adds the requirement of notification by 8 p.m. for openings between 10 p.m. and 8 a.m. is being tested because openings between 10 p.m. and 8 a.m. are extremely rare. Over an 18 month period there were only 6 bridge openings requested between 10 p.m. and 8 a.m. which averages one bridge opening request per three month period. One of the unique features of the Murray Morgan Bridge is its height above the waterway providing 60 feet of clearance at mean high water (MHW) in the closed position. Because of this vertical clearance the overwhelming majority of vessels which transit this waterway do not require a bridge opening. The majority of bridge openings are for locally moored and operated recreational sailboats with mast heights over 60 feet. Almost all of these vessels are moored at marinas in very close proximity of the bridge.

The second change being tested in this deviation is removing the authorized bridge closure periods in the morning and afternoon. The current regulation states that the draw need not be opened from 6:30 a.m. to 8:30 a.m. and 3:30 p.m. to 5:30 p.m. Monday through Friday, for vessels of less than 1,000 gross tons. This test deviation requires the draw to open at all times with proper advance notification. The morning and afternoon authorized closures of the bridge outlined in the existing regulation were put into place when the bridge was part of SR 509, a continuous route from Northeast Tacoma to downtown, and traffic volumes were approximately 15,000 vehicles per day. In 1997 a new SR 509 was constructed approximately 0.7 miles south of the bridge and is now used as the main traffic corridor. After

completion of the new SR 509, the Murray Morgan Bridge connection between Northeast Tacoma and downtown was severed due to roadway reconfiguration, resulting in traffic volumes dropping dramatically; therefore, the bridge no longer conveys high volumes of traffic during the morning and afternoon rush hours.

The third change being tested in this deviation is principally administrative and changes the contact information for emergency bridge openings. The existing regulation states ''In emergencies, openings shall be made as soon as possible upon notification to the Washington State Department of Transportation.'' The change being tested in this deviation requires notification for emergency opening to be made to the City of Tacoma. The reason for this change is because Washington State turned over ownership and responsibility of the bridge to the City of Tacoma on January 6, 1998.

Under this temporary deviation the bridge will operate as follows. The draw of the Murray Morgan Bridge, also known as the South 11th Street Bridge, across Thea Foss Waterway, previously known as City Waterway, mile 0.6, at Tacoma, shall open on signal if at least two hours notice is given. However, to obtain a bridge opening between 10 p.m. and 8 a.m. notification must be made to the City of Tacoma by 8 p.m. In emergencies, openings shall be made as soon as possible upon notification to the City of Tacoma. The Murray Morgan Bridge is a vertical lift bridge which provides a vertical clearance of 60 feet above mean high water. Vessels which do not require a bridge opening may continue to transit beneath the bridge at any time.

The Coast Guard has issued a Notice of Proposed Rule Making (NPRM) under docket number USCG–2012–0911 to receive comments on these changes. Comments can be submitted for this deviation or for the NPRM by following procedures outlined in the SUBMITTING COMMENTS section above.

In accordance with 33 CFR 117.35(e), the drawbridge must return to its regular operating schedule immediately at the end of the designated time period. This deviation from the operating regulations is authorized under 33 CFR 117.35.

Dated: October 2, 2012.

Randall D. Overton,

Bridge Administrator.

[FR Doc. 2012–28129 Filed 11–19–12; 8:45 am]

BILLING CODE 9110–04–P

DEPARTMENT OF HOMELAND SECURITY

Coast Guard

33 CFR Part 117

[Docket No. USCG–2012–0979]

Drawbridge Operation Regulation; Bayou Boeuf, Amelia, LA

AGENCY: Coast Guard, DHS.

ACTION: Notice of temporary deviation from regulations.

SUMMARY: The Coast Guard has issued a temporary deviation from the operating schedule that governs the Burlington Northern Santa Fe (BNSF) Railway Company swing span bridge across Bayou Boeuf, mile 10.2, at Amelia, St. Mary Parish, Louisiana. The deviation is necessary to complete scheduled repairs necessitated by a bridge allision. This deviation allows the bridge to remain in the closed-to-navigation position for sixteen consecutive hours.

DATES: This deviation is effective from 7 a.m. through 11 p.m. on Thursday, December 6, 2012.

ADDRESSES: Documents mentioned in this preamble as being available in the docket are part of docket USCG–2012–0979 and are available online by going to *http://www.regulations.gov,* inserting USCG–2012–0979 in the ''Keyword'' box and then clicking ''Search''. They are also available for inspection or copying at the Docket Management Facility (M–30), U.S. Department of Transportation, West Building Ground Floor, Room W12–140, 1200 New Jersey Avenue SE., Washington, DC 20590, between 9 a.m. and 5 p.m., Monday through Friday, except Federal holidays.

FOR FURTHER INFORMATION CONTACT: If you have questions on this rule, call or email Jim Wetherington, Bridge Branch Office, Coast Guard; telephone 504–671–2128, email *james.r.wetherington@uscg.mil.* If you have questions on viewing the docket, call Renee V. Wright, Program Manager, Docket Operations, telephone 202–366–9826.

SUPPLEMENTARY INFORMATION: The BNSF Railway Company has requested a temporary deviation from the operating schedule of the swing span railroad bridge across Bayou Boeuf, mile 10.2, at Amelia, St. Mary Parish, Louisiana. The bridge provides no vertical clearance in the closed-to-navigation position.

In accordance with 33 CFR 117.5, the bridge currently opens on signal for the passage of vessels. This deviation allows the vertical lift span of the bridge to remain in the closed-to-navigation position from 7 a.m. through 11 p.m. on Thursday, December 6, 2012.

The closure is necessary in order to change out a shaft and reducer gear damaged during a bridge allision earlier this year. Notices will be published in the Eighth Coast Guard District Local Notice to Mariners and will be broadcast via the Coast Guard Broadcast Notice to Mariners System.

Navigation at the site of the bridge consists mainly of tows with barges and some recreational pleasure craft. Due to prior experience, as well as coordination with waterway users, it has been determined that this closure will not have a significant effect on these vessels. An alternate route is available by using the GIWW, Morgan City to Port Allen Alternate Route.

In accordance with 33 CFR 117.35(e), the drawbridge must return to its regular operating schedule immediately at the end of the designated time period. This deviation from the operating regulations is authorized under 33 CFR 117.35.

Dated: November 6, 2012.

David M. Frank,

Bridge Administrator.

[FR Doc. 2012–28128 Filed 11–19–12; 8:45 am]

BILLING CODE 9110–04–P

DEPARTMENT OF HOMELAND SECURITY

Federal Emergency Management Agency

44 CFR Part 64

[Docket ID FEMA–2012–0003; Internal Agency Docket No. FEMA–8257]

Suspension of Community Eligibility

AGENCY: Federal Emergency Management Agency, DHS.

ACTION: Final rule.

SUMMARY: This rule identifies communities where the sale of flood insurance has been authorized under the National Flood Insurance Program (NFIP) that are scheduled for suspension on the effective dates listed within this rule because of noncompliance with the floodplain management requirements of the program. If the Federal Emergency Management Agency (FEMA) receives documentation that the community has adopted the required floodplain management measures prior to the effective suspension date given in this rule, the suspension will not occur and a notice of this will be provided by publication in the **Federal Register** on a subsequent date. Also, information identifying the current participation

status of a community can be obtained from FEMA's Community Status Book (CSB). The CSB is available at *http://www.fema.gov/fema/csb.shtm.*

DATES: The effective date of each community's scheduled suspension is the third date (''Susp.'') listed in the third column of the following tables.

FOR FURTHER INFORMATION CONTACT: If you want to determine whether a particular community was suspended on the suspension date or for further information, contact David Stearrett, Federal Insurance and Mitigation Administration, Federal Emergency Management Agency, 500 C Street SW., Washington, DC 20472, (202) 646–2953.

SUPPLEMENTARY INFORMATION: The NFIP enables property owners to purchase Federal flood insurance that is not otherwise generally available from private insurers. In return, communities agree to adopt and administer local floodplain management measures aimed at protecting lives and new construction from future flooding. Section 1315 of the National Flood Insurance Act of 1968, as amended, 42 U.S.C. 4022, prohibits the sale of NFIP flood insurance unless an appropriate public body adopts adequate floodplain management measures with effective enforcement measures. The communities listed in this document no longer meet that statutory requirement for compliance with program regulations, 44 CFR part 59. Accordingly, the communities will be suspended on the effective date in the third column. As of that date, flood insurance will no longer be available in the community. We recognize that some of these communities may adopt and submit the required documentation of legally enforceable floodplain management measures after this rule is published but prior to the actual suspension date. These communities will not be suspended and will continue to be eligible for the sale of NFIP flood insurance. A notice withdrawing the suspension of such communities will be published in the **Federal Register**.

In addition, FEMA publishes a Flood Insurance Rate Map (FIRM) that identifies the Special Flood Hazard Areas (SFHAs) in these communities. The date of the FIRM, if one has been published, is indicated in the fourth column of the table. No direct Federal financial assistance (except assistance pursuant to the Robert T. Stafford Disaster Relief and Emergency Assistance Act not in connection with a flood) may be provided for construction or acquisition of buildings in identified SFHAs for communities not participating in the NFIP and identified for more than a year on FEMA's initial FIRM for the community as having flood-prone areas (section 202(a) of the Flood Disaster Protection Act of 1973, 42 U.S.C. 4106(a), as amended). This prohibition against certain types of Federal assistance becomes effective for the communities listed on the date shown in the last column. The Administrator finds that notice and public comment procedures under 5 U.S.C. 553(b), are impracticable and unnecessary because communities listed in this final rule have been adequately notified.

Each community receives 6-month, 90-day, and 30-day notification letters addressed to the Chief Executive Officer stating that the community will be suspended unless the required floodplain management measures are met prior to the effective suspension date. Since these notifications were made, this final rule may take effect within less than 30 days.

National Environmental Policy Act. This rule is categorically excluded from the requirements of 44 CFR part 10, Environmental Considerations. No environmental impact assessment has been prepared.

Regulatory Flexibility Act. The Administrator has determined that this rule is exempt from the requirements of the Regulatory Flexibility Act because the National Flood Insurance Act of 1968, as amended, Section 1315, 42 U.S.C. 4022, prohibits flood insurance coverage unless an appropriate public body adopts adequate floodplain management measures with effective enforcement measures. The communities listed no longer comply with the statutory requirements, and after the effective date, flood insurance will no longer be available in the communities unless remedial action takes place.

Regulatory Classification. This final rule is not a significant regulatory action under the criteria of section 3(f) of Executive Order 12866 of September 30, 1993, Regulatory Planning and Review, 58 FR 51735.

Executive Order 13132, Federalism. This rule involves no policies that have federalism implications under Executive Order 13132.

Executive Order 12988, Civil Justice Reform. This rule meets the applicable standards of Executive Order 12988.

Paperwork Reduction Act. This rule does not involve any collection of information for purposes of the Paperwork Reduction Act, 44 U.S.C. 3501 *et seq.*

List of Subjects in 44 CFR Part 64

Flood insurance, Floodplains.

Accordingly, 44 CFR Part 64 is amended as follows:

PART 64—[AMENDED]

■ 1. The authority citation for Part 64 continues to read as follows:

Authority: 42 U.S.C. 4001 *et seq.;* Reorganization Plan No. 3 of 1978, 3 CFR, 1978 Comp.; p. 329; E.O. 12127, 44 FR 19367, 3 CFR, 1979 Comp.; p. 376.

§ 64.6 [Amended]

■ 2. The tables published under the authority of § 64.6 are amended as follows:

State and location	Community No.	Effective date authorization/cancellation of sale of flood insurance in community	Current effective map date	Date certain Federal assistance no longer available in SFHAs
Region IV				
Florida:				
Fellsmere, City of, Indian River County	120120	N/A, Emerg; October 18, 1993, Reg; December 4, 2012, Susp.	Dec. 4, 2012	Dec. 4, 2012.
Indian River County, Unincorporated Areas.	120119	July 14, 1972, Emerg; July 3, 1978, Reg; December 4, 2012, Susp.	.....do*	Do.
Indian River Shores, Town of, Indian River County.	120121	August 15, 1973, Emerg; September 5, 1979, Reg; December 4, 2012, Susp.	.....do	Do.
Orchid, Town of, Indian River County ...	120122	July 24, 1975, Emerg; April 15, 1980, Reg; December 4, 2012, Susp.	.....do	Do.

State and location	Community No.	Effective date authorization/cancellation of sale of flood insurance in community	Current effective map date	Date certain Federal assistance no longer available in SFHAs
Sebastian, City of, Indian River County	120123	September 2, 1975, Emerg; April 15, 1980, Reg; December 4, 2012, Susp.	.....do	Do.
Vero Beach, City of, Indian River County.	120124	December 15, 1972, Emerg; September 30, 1977, Reg; December 4, 2012, Susp.	.....do	Do.
Region V				
Indiana:				
Floyd County, Unincorporated Areas. ...	180432	December 2, 1976, Emerg; January 2, 1981, Reg; December 4, 2012, Susp.	.....do	Do.
Georgetown, Town of, Floyd County	180063	March 31, 1975, Emerg; March 28, 1980, Reg; December 4, 2012, Susp.	.....do	Do.
New Albany, City of, Floyd County	180062	October 1, 1971, Emerg; December 17, 1976, Reg; December 4, 2012, Susp.	.....do	Do.
Pine Village, Town of, Warren County ..	180564	December 19, 2008, Emerg; N/A, Reg; December 4, 2012, Susp.	.....do	Do.
Warren County, Unincorporated Areas.	180448	February 25, 2004, Emerg; N/A, Reg; December 4, 2012, Susp.	.....do	Do.
West Lebanon, Town of, Warren County.	180565	December 19, 2008, Emerg; N/A, Reg; December 4, 2012, Susp.	.....do	Do.
Williamsport, Town of, Warren County ..	180272	June 3, 1976, Emerg; September 1, 1988, Reg; December 4, 2012, Susp.	.....do	Do.
Michigan:				
Chesterfield, Township of, Macomb County.	260120	November 24, 1972, Emerg; July 3, 1978, Reg; December 4, 2012, Susp.	.....do	Do.
Clinton, Charter Township of, Macomb County.	260121	February 9, 1973, Emerg; August 1, 1979, Reg; December 4, 2012, Susp.	.....do	Do.
Harrison, Township of, Macomb County	260123	December 8, 1972, Emerg; May 5, 1981, Reg; December 4, 2012, Susp.	.....do	Do.
Iron Mountain, City of, Dickinson County.	260063	April 8, 1975, Emerg; October 16, 1991, Reg; December 4, 2012, Susp.	.....do	Do.
Kingsford, City of, Dickinson County	260064	June 23, 1975, Emerg; N/A, Reg; December 4, 2012, Susp.	.....do	Do.
Mount Clemens, City of, Macomb County.	260124	April 5, 1973, Emerg; July 16, 1980, Reg; December 4, 2012, Susp.	.....do	Do.
New Baltimore, City of, Macomb County.	260125	January 12, 1973, Emerg; September 1, 1978, Reg; December 4, 2012, Susp.	.....do	Do.
Saint Clair Shores, City of, Macomb County.	260127	December 1, 1972, Emerg; August 1, 1979, Reg; December 4, 2012, Susp.	.....do	Do.
Waucedah, Township of, Dickinson County.	260986	March 11, 1997, Emerg; N/A, Reg; December 4, 2012, Susp.	.....do	Do.
Region VI				
New Mexico:				
Española, City of, Santa Fe County	350052	April 4, 1975, Emerg; February 19, 1986, Reg; December 4, 2012, Susp.	.....do	Do.
Santa Fe, City of, Santa Fe County	350070	February 13, 1975, Emerg; July 2, 1980, Reg; December 4, 2012, Susp.	.....do	Do.
Santa Fe County, Unincorporated Areas.	350069	March 25, 1976, Emerg; November 4, 1988, Reg; December 4, 2012, Susp.	.....do	Do.
Texas:.				
Briaroaks, City of, Johnson County	480398	N/A, Emerg; June 15, 2010, Reg; December 4, 2012, Susp.	.....do	Do.
Cleburne, City of, Johnson County	485462	April 2, 1971, Emerg; June 23, 1972, Reg; December 4, 2012, Susp.	.....do	Do.
Godley, City of, Johnson County	480880	N/A, Emerg; February 18, 2011, Reg; December 4, 2012, Susp.	.....do	Do.
Grandview, City of, Johnson County	480881	N/A, Emerg; July 17, 2002, Reg; December 4, 2012, Susp.	.....do	Do.
Johnson County, Unincorporated Areas	480879	August 25, 1989, Emerg; September 27, 1991, Reg; December 4, 2012, Susp.	.....do	Do.
Joshua, City of, Johnson County	480882	September 9, 1991, Emerg; September 27, 1991, Reg; December 4, 2012, Susp.	.....do	Do.
Keene, City of, Johnson County	481107	N/A, Emerg; February 21, 2001, Reg; December 4, 2012, Susp.	.....do	Do.
Mansfield, City of, Johnson County	480606	February 28, 1975, Emerg; December 18, 1985, Reg; December 4, 2012, Susp.	.....do	Do.
Rio Vista, Village of, Johnson County ...	481159	September 6, 1991, Emerg; September 27, 1991, Reg; December 4, 2012, Susp.	.....do	Do.
Venus, City of, Johnson County	480883	May 13, 1991, Emerg; September 27, 1991, Reg; December 4, 2012, Susp.	.....do	Do.

State and location	Community No.	Effective date authorization/cancellation of sale of flood insurance in community	Current effective map date	Date certain Federal assistance no longer available in SFHAs
Region VII				
Iowa:				
Barnum, City of, Webster County	190528	May 6, 1994, Emerg; September 1, 1996, Reg; December 4, 2012, Susp.	.....do	Do.
Dayton, City of, Webster County	190565	August 19, 1994, Emerg; September 1, 1996, Reg; December 4, 2012, Susp.	.....do	Do.
Fort Dodge, City of, Webster County	195181	June 19, 1970, Emerg; April 9, 1971, Reg; December 4, 2012, Susp.	.....do	Do.
Lehigh, City of, Webster County	190310	October 3, 1979, Emerg; September 4, 1985, Reg; December 4, 2012, Susp.	.....do	Do.
Moorland, City of, Webster County	190784	August 20, 1993, Emerg; September 1, 1996, Reg; December 4, 2012, Susp.	.....do	Do.
Webster County, Unincorporated Areas	190831	March 2, 1979, Emerg; October 1, 1985, Reg; December 4, 2012, Susp.	.....do	Do.
Region VIII				
Montana:				
Carbon County, Unincorporated Areas	300139	March 23, 1978, Emerg; November 4, 1981, Reg; December 4, 2012, Susp.	.....do	Do.
Fromberg, Town of, Carbon County	300005	May 12, 1976, Emerg; November 4, 1981, Reg; December 4, 2012, Susp.	.....do	Do.
Joliet, Town of, Carbon County	300006	April 26, 1979, Emerg; May 19, 1981, Reg; December 4, 2012, Susp.	.....do	Do.
Red Lodge, City of, Carbon County	300007	June 30, 1975, Emerg; May 19, 1981, Reg; December 4, 2012, Susp.	.....do	Do.

*do = Ditto.
Code for reading third column: Emerg.—Emergency; Reg.—Regular; Susp—Suspension.

Dated: November 8, 2012.

David L. Miller,

Associate Administrator, Federal Insurance and Mitigation Administration, Department of Homeland Security, Federal Emergency Management Agency.

[FR Doc. 2012–28121 Filed 11–19–12; 8:45 am]

BILLING CODE 9110–12–P

DEPARTMENT OF COMMERCE

National Oceanic and Atmospheric Administration

50 CFR Part 648

[Docket No. 111220786–1781–01]

RIN 0648–XC340

Fisheries of the Northeastern United States; Summer Flounder Fishery; Quota Transfer

AGENCY: National Marine Fisheries Service (NMFS), National Oceanic and Atmospheric Administration (NOAA), Commerce.

ACTION: Temporary rule; quota transfer.

SUMMARY: NMFS announces that the State of North Carolina is transferring a portion of its 2012 commercial summer flounder quota to the State of Rhode Island. NMFS is adjusting the quotas and announcing the revised commercial quota for each state involved.

DATES: Effective November 19, 2012, through December 31, 2012.

FOR FURTHER INFORMATION CONTACT: Carly Bari, Fishery Management Specialist, 978–281–9224.

SUPPLEMENTARY INFORMATION: Regulations governing the summer flounder fishery are in 50 CFR part 648, and require annual specification of a commercial quota that is apportioned among the coastal states from North Carolina through Maine. The process to set the annual commercial quota and the percent allocated to each state are described in § 648.100.

The final rule implementing Amendment 5 to the Summer Flounder, Scup, and Black Sea Bass Fishery Management Plan, which was published on December 17, 1993 (58 FR 65936), provided a mechanism for summer flounder quota to be transferred from one state to another. Two or more states, under mutual agreement and with the concurrence of the Administrator, Northeast Region, NMFS (Regional Administrator), can transfer or combine summer flounder commercial quota under § 648.102(c)(2). The Regional Administrator is required to consider the criteria in § 648.102(c)(2)(i) to evaluate requests for quota transfers or combinations.

North Carolina has agreed to transfer 13,925 lb (6,316 kg) of its 2012 commercial quota to Rhode Island. This transfer was prompted by summer flounder landings of one North Carolina vessels that was granted safe harbor in Rhode Island due to Hurricane Sandy, on October 30, 2012, thereby requiring a quota transfer to account for an increase in Rhode Island's landings that would have otherwise accrued against the North Carolina quota. The Regional Administrator has determined that the criteria set forth in § 648.102(c)(2)(i) have been met. The revised summer flounder quotas for calendar year 2012 are: North Carolina, 1,589,325 lb (720,955 kg); and Rhode Island, 2,010,325 lb (911,868 kg).

Classification

This action is taken under 50 CFR part 648 and is exempt from review under Executive Order 12866.

Authority: 16 U.S.C. 1801 *et seq.*

Dated: November 14, 2012.

Lindsey Fullenkamp,

Acting Deputy Director, Office of Sustainable Fisheries, National Marine Fisheries Service.

[FR Doc. 2012–28246 Filed 11–19–12; 8:45 am]

BILLING CODE 3510–22–P

Proposed Rules

Federal Register

Vol. 77, No. 224

Tuesday, November 20, 2012

This section of the FEDERAL REGISTER contains notices to the public of the proposed issuance of rules and regulations. The purpose of these notices is to give interested persons an opportunity to participate in the rule making prior to the adoption of the final rules.

DEPARTMENT OF TRANSPORTATION

Federal Aviation Administration

14 CFR Part 25

[Docket No. FAA–2012–1236; Notice No. 25–12–14–SC]

Special Conditions: Bombardier Aerospace, Model BD–500–1A10 and BD–500–1A11 Airplanes; Sidestick Controllers

AGENCY: Federal Aviation Administration (FAA), DOT.

ACTION: Notice of proposed special conditions.

SUMMARY: This action proposes special conditions for the Bombardier Aerospace Model BD–500–1A10 and BD–500–1A11 airplanes. These airplanes will have a novel or unusual design feature, specifically sidestick controllers designed to be operated with only one hand. The applicable airworthiness regulations do not contain adequate or appropriate safety standards for this design feature. These proposed special conditions contain the additional safety standards that the Administrator considers necessary to establish a level of safety equivalent to that established by the existing airworthiness standards.

DATES: Send your comments on or before January 4, 2013.

ADDRESSES: Send comments identified by docket number [FAA–2012–1236] using any of the following methods:

- *Federal eRegulations Portal:* Go to *http://www.regulations.gov/* and follow the online instructions for sending your comments electronically.
- *Mail:* Send comments to Docket Operations, M–30, U.S. Department of Transportation (DOT), 1200 New Jersey Avenue SE., Room W12–140, West Building Ground Floor, Washington, DC 20590–0001.
- *Hand Delivery or Courier:* Take comments to Docket Operations in Room W12–140 of the West Building Ground Floor at 1200 New Jersey Avenue SE., Washington, DC, between 8 a.m. and 5 p.m., Monday through Friday, except federal holidays.
- *Fax:* Fax comments to Docket Operations at 202–493–2251.

Privacy: The FAA will post all comments it receives, without change, to *http://www.regulations.gov/,* including any personal information the commenter provides. Using the search function of the docket Web site, anyone can find and read the electronic form of all comments received into any FAA docket, including the name of the individual sending the comment (or signing the comment for an association, business, labor union, etc.). DOT's complete Privacy Act Statement can be found in the **Federal Register** published on April 11, 2000 (65 FR 19477–19478), as well as at *http://DocketsInfo.dot.gov/.*

Docket: Background documents or comments received may be read at *http://www.regulations.gov/* at any time. Follow the online instructions for accessing the docket or go to the Docket Operations in Room W12–140 of the West Building Ground Floor at 1200 New Jersey Avenue SE., Washington, DC, between 9 a.m. and 5 p.m., Monday through Friday, except federal holidays.

FOR FURTHER INFORMATION CONTACT: Todd Martin, FAA, Airframe and Cabin Safety Branch, ANM–115, Transport Airplane Directorate, Aircraft Certification Service, 1601 Lind Avenue SW., Renton, Washington 98057–3356; telephone 425–227–1178; facsimile 425–227–1232.

SUPPLEMENTARY INFORMATION:

Comments Invited

We invite interested people to take part in this rulemaking by sending written comments, data, or views. The most helpful comments reference a specific portion of the special conditions, explain the reason for any recommended change, and include supporting data.

We will consider all comments we receive on or before the closing date for comments. We may change these special conditions based on the comments we receive.

Background

On December 10, 2009, Bombardier Aerospace applied for a type certificate for their new Model BD–500–1A10 and BD–500–1A11 airplanes. The Model BD–500–1A10 and BD–500–1A11 airplanes are swept-wing monoplanes with pressurized cabins, and they share an identical supplier base and significant common design elements. The fuselages are aluminum alloy material, blended double-bubble fuselages, sized for nominal five-abreast seating. Each airplane's powerplant includes two under-wing Pratt and Whitney PW1524G ultra-high bypass, geared turbofan engines. The flight controls are fly-by-wire flight with two passive/uncoupled sidesticks. Avionics include five landscape primary cockpit displays. The dimension of the aircraft encompasses a wingspan of 115 feet; height of 37.75 feet; and length of 114.75 feet for the Model BD–500–1A10 and length of 127 feet for the Model BD–500–1A11. Passenger capacity is designated as 110 for the Model BD–500–1A10 and 125 for the Model BD–500–1A11. Maximum takeoff weight is 131,000 pounds for the Model BD–500–1A10 and 144,000 pounds for the Model BD–500–1A11. Maximum takeoff thrust is 21,000 pounds for the Model BD–500–1A10 and 23,300 pounds for the Model BD–500–1A11. The range is 5,463 kilometres for both model airplanes. The maximum operating altitude is 41,000 feet for both model airplanes.

Bombardier Model BD–500–1A10 and BD–500–1A11 airplanes will be equipped with a sidestick controller instead of a conventional control column and wheel. This kind of controller is designed for only one-hand operation.

The requirement of Title 14, Code of Federal Regulations (14 CFR 25.397(c)), which defines limit pilot forces and torques for conventional wheel or stick controls, is not adequate for a sidestick controller. A special condition is necessary to specify the appropriate loading conditions for this kind of controller.

Type Certification Basis

Under the provisions of 14 CFR 21.17, Bombardier Aerospace must show that the Model BD–500–1A10 and BD–500–1A11 airplanes meet the applicable provisions of part 25, as amended by Amendments 25–1 through 25–129 thereto.

If the Administrator finds that the applicable airworthiness regulations (i.e., 14 CFR part 25) do not contain adequate or appropriate safety standards

for the Bombardier Aerospace Model BD–500–1A10 and BD–500–1A11 airplanes because of a novel or unusual design feature, special conditions are prescribed under the provisions of § 21.16.

Special conditions are initially applicable to the model for which they are issued. Should the type certificate for that model be amended later to include any other model that incorporates the same or similar novel or unusual design feature, the special conditions would also apply to the other model under § 21.101.

In addition to the applicable airworthiness regulations and special conditions, the Bombardier Aerospace Model BD–500–1A10 and BD–500–1A11 airplanes must comply with the fuel vent and exhaust emission requirements of 14 CFR part 34 and the noise certification requirements of 14 CFR part 36 and the FAA must issue a finding of regulatory adequacy under § 611 of Public Law 92–574, the ''Noise Control Act of 1972.''

The FAA issues special conditions, as defined in 14 CFR 11.19, in accordance with § 11.38, and they become part of the type-certification basis under § 21.17(a)(2).

Novel or Unusual Design Features

The Bombardier Aerospace Model BD–500–1A10 and BD–500–1A11 airplanes will incorporate the following novel or unusual design feature: A sidestick controller instead of a conventional control column and wheel. This kind of controller is designed for one-hand operation.

Discussion

The Bombardier Aerospace Model BD–500–1A10 and BD–500–1A11 airplanes are equipped with a sidestick controller instead of a conventional wheel or control stick. This kind of controller is designed to be operated using only one hand. The requirement of 14 CFR 25.397(c), which defines limit pilot forces and torques for conventional wheel or stick controls, is not adequate for a sidestick controller, because pilot forces are applied to sidestick controllers with only the wrist, not arms. A special condition is necessary to specify the appropriate loading conditions for a sidestick controller. These proposed special conditions contain the additional safety standards that the Administrator considers necessary to establish a level of safety equivalent to that established by the existing airworthiness standards.

Applicability

As discussed above, these special conditions are applicable to the Bombardier Aerospace Model BD–500–1A10 and BD–500–1A11 airplanes. Should Bombardier Aerospace apply at a later date for a change to the type certificate to include another model incorporating the same novel or unusual design feature, the special conditions would apply to that model as well.

Conclusion

This action affects only certain novel or unusual design features on Bombardier Aerospace Model BD–500–1A10 and BD–500–1A11 airplanes. It is not a rule of general applicability.

List of Subjects in 14 CFR Part 25

Aircraft, Aviation safety, Reporting and recordkeeping requirements.

The authority citation for these special conditions is as follows:

Authority: 49 U.S.C. 106(g), 40113, 44701, 44702, 44704.

The Proposed Special Conditions

Accordingly, the Federal Aviation Administration (FAA) proposes the following special conditions as part of the type certification basis for Model BD–500–1A10 and BD–500–1A11 airplanes by Bombardier Aerospace:

Limit Pilot Forces for Sidestick Control

In lieu of the pilot forces specified in § 25.397(c), for the Bombardier Model BD–500–1A10 and BD–500–1A11 airplanes equipped with sidestick controls designed for forces to be applied by one wrist and not arms, the limit pilot forces are as follows:

1. For all components between and including the handle and its control stops.

Pitch	Roll
Nose up 200 pounds force (lbf).	Nose Left 100 lbf.
Nose down 200 lbf	Nose Right 100 lbf.

2. For all other components of the sidestick control assembly, excluding the internal components of the electrical sensor assemblies, to avoid damage as a result of an in-flight jam.

Pitch	Roll
Nose up 125 lbf	Nose Left 50 lbf.
Nose down 125 lbf	Nose Right 50 lbf.

Issued in Renton, Washington, on November 14, 2012.

Ali Bahrami,

Manager, Transport Airplane Directorate, Aircraft Certification Service.

[FR Doc. 2012–28131 Filed 11–19–12; 8:45 am]

BILLING CODE 4910–13–P

DEPARTMENT OF TRANSPORTATION

Federal Aviation Administration

14 CFR Part 25

[Docket No. FAA–2012–1211; Notice No. 25–12–10–SC]

Special Conditions: Embraer S.A., Model EMB–550 Airplanes; Flight Envelope Protection: Pitch and Roll Limiting Functions

AGENCY: Federal Aviation Administration (FAA), DOT.

ACTION: Notice of proposed special conditions.

SUMMARY: This action proposes special conditions for the Embraer S.A. Model EMB–550 airplane. This airplane will have a novel or unusual design feature associated with pitch and roll limiting functions, specifically an electronic flight control system which contains fly-by-wire control laws, including envelope protections. The applicable airworthiness regulations do not contain adequate or appropriate safety standards for this design feature. These proposed special conditions contain the additional safety standards that the Administrator considers necessary to establish a level of safety equivalent to that established by the existing airworthiness standards.

DATES: Send your comments on or before January 4, 2013.

ADDRESSES: Send comments identified by docket number FAA–2012–1211 using any of the following methods:

- *Federal eRegulations Portal:* Go to *http://www.regulations.gov/* and follow the online instructions for sending your comments electronically.
- *Mail:* Send comments to Docket Operations, M–30, U.S. Department of Transportation (DOT), 1200 New Jersey Avenue SE., Room W12–140, West Building Ground Floor, Washington, DC 20590–0001.
- *Hand Delivery or Courier:* Take comments to Docket Operations in Room W12–140 of the West Building Ground Floor at 1200 New Jersey Avenue SE., Washington, DC, between 8 a.m. and 5 p.m., Monday through Friday, except federal holidays.
- *Fax:* Fax comments to Docket Operations at 202–493–2251.

Privacy: The FAA will post all comments it receives, without change, to *http://www.regulations.gov/,* including any personal information the commenter provides. Using the search function of the docket Web site, anyone can find and read the electronic form of all comments received into any FAA docket, including the name of the individual sending the comment (or signing the comment for an association, business, labor union, etc.). DOT's complete Privacy Act Statement can be found in the **Federal Register** published on April 11, 2000 (65 FR 19477–19478), as well as at *http://DocketsInfo.dot.gov/.*

Docket: Background documents or comments received may be read at *http://www.regulations.gov/* at any time. Follow the online instructions for accessing the docket or go to the Docket Operations in Room W12–140 of the West Building Ground Floor at 1200 New Jersey Avenue SE., Washington, DC, between 9 a.m. and 5 p.m., Monday through Friday, except federal holidays.

FOR FURTHER INFORMATION CONTACT: Joe Jacobsen, FAA, Airplane and Flight Crew Interface Branch, ANM–111, Transport Airplane Directorate, Aircraft Certification Service, 1601 Lind Avenue SW., Renton, Washington 98057–3356; telephone 425–227–2011; facsimile 425–227–1149.

SUPPLEMENTARY INFORMATION:

Comments Invited

We invite interested people to take part in this rulemaking by sending written comments, data, or views. The most helpful comments reference a specific portion of the special conditions, explain the reason for any recommended change, and include supporting data.

We will consider all comments we receive on or before the closing date for comments. We may change these special conditions based on the comments we receive.

Background

On May 14, 2009, Embraer S.A. applied for a type certificate for their new Model EMB–550 airplane. The Model EMB–550 airplane is the first of a new family of jet airplanes designed for corporate flight, fractional, charter, and private owner operations. The aircraft has a conventional configuration with a low wing and T-tail empennage. The primary structure is metal with composite empennage and control surfaces. The Model EMB–550 airplane is designed for 8 passengers, with a maximum of 12 passengers. It is equipped with two Honeywell HTF7500–E medium bypass ratio turbofan engines mounted on aft fuselage pylons. Each engine produces approximately 6,540 pounds of thrust for normal takeoff. The primary flight controls consist of hydraulically powered fly-by-wire elevators, aileron and rudder, controlled by the pilot or copilot sidestick.

The airworthiness standards in Title 14, Code of Federal Regulations (14 CFR) part 25 do not specifically relate to flight characteristics associated with fixed attitude limits. Embraer S.A. will implement pitch and roll attitude protection functions through the normal modes of the electronic flight control system that will provide speed stability for high and low pitch angles. These functions also provide strong spiral stability for roll angles at high bank angles. In addition, bank angle limiting is introduced at speeds greater than V_{MO}/M_{MO}, up to V_{DF}/M_{DF}.

Type Certification Basis

Under the provisions of 14 CFR 21.17, Embraer S.A. must show that the Model EMB–550 airplane meets the applicable provisions of part 25, as amended by Amendments 25–1 through 25–127 thereto.

If the Administrator finds that the applicable airworthiness regulations (i.e., 14 CFR part 25) do not contain adequate or appropriate safety standards for the Model EMB–550 airplane because of a novel or unusual design feature, special conditions are prescribed under the provisions of § 21.16.

Special conditions are initially applicable to the model for which they are issued. Should the type certificate for that model be amended later to include any other model that incorporates the same or similar novel or unusual design feature, the special conditions would also apply to the other model under § 21.101.

In addition to the applicable airworthiness regulations and special conditions, the Model EMB–550 airplane must comply with the fuel vent and exhaust emission requirements of 14 CFR part 34 and the noise certification requirements of 14 CFR part 36 and the FAA must issue a finding of regulatory adequacy under § 611 of Public Law 92–574, the ''Noise Control Act of 1972.''

The FAA issues special conditions, as defined in 14 CFR 11.19, in accordance with § 11.38, and they become part of the type-certification basis under § 21.17(a)(2).

Novel or Unusual Design Features

The Model EMB–550 airplane will incorporate the following novel or unusual design feature: An electronic flight control system which contains fly-by-wire control laws, including envelope protections, which were not envisioned when part 25 was written.

Discussion

We expect that high thrust-to-weight ratios will provide the most critical cases for the positive pitch limit. A margin in pitch control must be available to enable speed control in maneuvers such as climb after takeoff and balked landing climb. The pitch limit must not impede likely maneuvering made necessary by collision avoidance efforts. A negative pitch limit must similarly not interfere with collision avoidance capability or with attaining and maintaining speeds near V_{MO}/M_{MO} for emergency descent.

Spiral stability must not restrict attaining roll angles up to 65 degrees (i.e., an approximately 2.4*g*-level turn). This force must not require excessive pilot strength as stated in § 25.143(f).

These proposed special conditions contain the additional safety standards that the Administrator considers necessary to establish a level of safety equivalent to that established by the existing airworthiness standards.

Applicability

As discussed above, these special conditions are applicable to the Model EMB–550 airplane. Should Embraer S.A. apply at a later date for a change to the type certificate to include another model incorporating the same novel or unusual design feature, the special conditions would apply to that model as well.

Conclusion

This action affects only certain novel or unusual design features on one model of airplanes. It is not a rule of general applicability.

List of Subjects in 14 CFR Part 25

Aircraft, Aviation safety, Reporting and recordkeeping requirements.

The authority citation for these special conditions is as follows:

Authority: 49 U.S.C. 106(g), 40113, 44701, 44702, 44704.

The Proposed Special Conditions

Accordingly, the Federal Aviation Administration (FAA) proposes the following special conditions as part of the type certification basis for Embraer S.A. Model EMB–550 airplanes. In addition to § 25.143, the following requirements apply:

1. Flight Envelope Protection: Pitch and Roll Limiting Functions.

a. The pitch limiting function must not impede normal maneuvering for pitch angles up to the maximum required for normal maneuvering, including a normal all-engines operating takeoff, plus a suitable margin to allow for satisfactory speed control.

b. The pitch and roll limiting functions must not restrict or prevent attaining pitch attitudes necessary for emergency maneuvering or roll angles up to 66 degrees with flaps up, or 60 degrees with flaps down. Spiral stability, which is introduced above 33 degrees roll angle, must not require excessive pilot strength to achieve these roll angles. Other protections, which further limit the roll capability under certain extreme angle of attack or attitude or high speed conditions, are acceptable, as long as they allow at least 45 degrees of roll capability.

c. A lower limit of roll is acceptable beyond the overspeed warning if it is possible to recover the aircraft to the normal flight envelope without undue difficulty or delay.

Issued in Renton, Washington, on November 9, 2012.

Ali Bahrami,

Manager, Transport Airplane Directorate, Aircraft Certification Service.

[FR Doc. 2012–28133 Filed 11–19–12; 8:45 am]

BILLING CODE 4910–13–P

DEPARTMENT OF TRANSPORTATION

Federal Aviation Administration

14 CFR Part 25

[Docket No. FAA–2012–1216; Notice No. 25–12–13–SC]

Special Conditions: Embraer S.A., Model EMB–550 Airplane, Limit Pilot Forces for Sidestick Control

AGENCY: Federal Aviation Administration (FAA), DOT.

ACTION: Notice of proposed special conditions.

SUMMARY: This action proposes special conditions for the Embraer S.A. Model EMB–550 airplane. This airplane will have a novel or unusual design feature, specifically sidestick controllers designed to be operated with only one hand. The applicable airworthiness regulations do not contain adequate or appropriate safety standards for this design feature. These proposed special conditions contain the additional safety standards that the Administrator considers necessary to establish a level of safety equivalent to that established by the existing airworthiness standards.

DATES: Send your comments on or before January 4, 2013.

ADDRESSES: Send comments identified by docket number [FAA–2012–1216] using any of the following methods:

- *Federal eRegulations Portal:* Go to *http://www.regulations.gov/* and follow the online instructions for sending your comments electronically.
- *Mail:* Send comments to Docket Operations, M–30, U.S. Department of Transportation (DOT), 1200 New Jersey Avenue SE., Room W12–140, West Building Ground Floor, Washington, DC 20590–0001.
- *Hand Delivery or Courier:* Take comments to Docket Operations in Room W12–140 of the West Building Ground Floor at 1200 New Jersey Avenue SE., Washington, DC, between 8 a.m. and 5 p.m., Monday through Friday, except federal holidays.
- *Fax:* Fax comments to Docket Operations at 202–493–2251.

Privacy: The FAA will post all comments it receives, without change, to *http://www.regulations.gov/*, including any personal information the commenter provides. Using the search function of the docket Web site, anyone can find and read the electronic form of all comments received into any FAA docket, including the name of the individual sending the comment (or signing the comment for an association, business, labor union, etc.). DOT's complete Privacy Act Statement can be found in the **Federal Register** published on April 11, 2000 (65 FR 19477–19478), as well as at *http://DocketsInfo.dot.gov/.*

Docket: Background documents or comments received may be read at *http://www.regulations.gov/* at any time. Follow the online instructions for accessing the docket or go to the Docket Operations in Room W12–140 of the West Building Ground Floor at 1200 New Jersey Avenue SE., Washington, DC, between 9 a.m. and 5 p.m., Monday through Friday, except federal holidays.

FOR FURTHER INFORMATION CONTACT: Todd Martin, FAA, Airframe and Cabin Safety Branch, ANM–115, Transport Airplane Directorate, Aircraft Certification Service, 1601 Lind Avenue SW., Renton, Washington 98057–3356; telephone 425–227–1178; facsimile 425–227–1149.

SUPPLEMENTARY INFORMATION:

Comments Invited

We invite interested people to take part in this rulemaking by sending written comments, data, or views. The most helpful comments reference a specific portion of the special conditions, explain the reason for any recommended change, and include supporting data.

We will consider all comments we receive on or before the closing date for comments. We may change these special conditions based on the comments we receive.

Background

On May 14, 2009, Embraer S.A. applied for a type certificate for their new Model EMB–550 airplane. The Model EMB–550 airplane is the first of a new family of jet airplanes designed for corporate flight, fractional, charter, and private owner operations. The aircraft has a conventional configuration with low wing and T-tail empennage. The primary structure is metal with composite empennage and control surfaces. The Model EMB–550 airplane is designed for 8 passengers, with a maximum of 12 passengers. It is equipped with two Honeywell HTF7500–E medium bypass ratio turbofan engines mounted on aft fuselage pylons. Each engine produces approximately 6,540 pounds of thrust for normal takeoff. The primary flight controls consist of hydraulically powered fly-by-wire elevators, ailerons, and rudder, controlled by the pilot or copilot sidestick.

Current regulations reference pilot effort loads for the cockpit pitch and roll controls that are based on a two-handed effort. The cockpit roll and pitch controls for the Model EMB–550 airplane are designed for one-handed operation.

Type Certification Basis

Under the provisions of Title 14, Code of Federal Regulations (14 CFR) 21.17, Embraer S.A. must show that the Model EMB–550 airplane meets the applicable provisions of part 25, as amended by Amendments 25–1 through 25–127 thereto.

If the Administrator finds that the applicable airworthiness regulations 14 CFR part 25 do not contain adequate or appropriate safety standards for the Model EMB–550 airplane because of a novel or unusual design feature, special conditions are prescribed under the provisions of § 21.16.

Special conditions are initially applicable to the model for which they are issued. Should the type certificate for that model be amended later to include any other model that incorporates the same or similar novel or unusual design feature, the special conditions would also apply to the other model under § 21.101.

In addition to the applicable airworthiness regulations and special conditions, the Model EMB–550 airplane must comply with the fuel vent and exhaust emission requirements of 14 CFR part 34 and the noise certification requirements of 14 CFR part 36 and the FAA must issue a finding of regulatory adequacy under section 611 of Public Law 92–574, the ''Noise Control Act of 1972.''

The FAA issues special conditions, as defined in 14 CFR 11.19, in accordance with § 11.38, and they become part of the type-certification basis under § 21.17(a)(2).

Novel or Unusual Design Features

The Model EMB–550 airplane will incorporate the following novel or unusual design features: The Embraer S.A. Model EMB–550 airplane is equipped with a sidestick controller instead of a conventional wheel or control stick. This kind of controller is designed to be operated using only one hand. The requirement of 14 CFR 25.397(c), which defines limit pilot forces and torques for conventional wheel or stick controls, is not appropriate for a sidestick controller. Therefore, a special condition is necessary to specify the appropriate loading conditions for this kind of controller.

Discussion

The Embraer S.A. Model EMB–550 airplane is equipped with a sidestick controller instead of a conventional wheel or control stick. This kind of controller is designed to be operated using only one hand. The requirement of 14 CFR 25.397(c), which defines limit pilot forces and torques for conventional wheel or stick controls, is not appropriate for a sidestick controller, because pilot forces are applied to sidestick controllers with only the wrist, not arms. These proposed special conditions contain the additional safety standards that the Administrator considers necessary to establish a level of safety equivalent to that established by the existing airworthiness standards.

Applicability

As discussed above, these special conditions are applicable to the Model EMB–550 airplane. Should Embraer S.A. apply at a later date for a change to the type certificate to include another model incorporating the same novel or unusual design feature, the special conditions would apply to that model as well.

Conclusion

This action affects only certain novel or unusual design features on one model of airplanes. It is not a rule of general applicability.

List of Subjects in 14 CFR Part 25

Aircraft, Aviation safety, Reporting and recordkeeping requirements.

The authority citation for these special conditions is as follows:

Authority: 49 U.S.C. 106(g), 40113, 44701, 44702, 44704.

The Proposed Special Conditions

Accordingly, the FAA proposes the following special conditions as part of the type certification basis for Embraer S.A. Model EMB–550 airplanes.

1. Limit Pilot Forces for Sidestick Control.

In lieu of the pilot forces specified in § 25.397(c):

(a) The limit pilot forces are:

Pitch	Roll
Nose up 200 pounds force (lbf).	Nose left 100 lbf.
Nose down 200 lbf	Nose right 100 lbf.

(b) For all other components of the sidestick control assembly, excluding the internal components of the electrical sensor assemblies, to avoid damage as a result of an in-flight jam.

Pitch	Roll
Nose up 125 lbf	Nose left 50 lbf.
Nose down 125 lbf	Nose right 50 lbf.

Issued in Renton, Washington, on November 14, 2012.

Ali Bahrami,

Manager, Transport Airplane Directorate, Aircraft Certification Service.

[FR Doc. 2012–28113 Filed 11–19–12; 8:45 am]

BILLING CODE 4910–13–P

DEPARTMENT OF TRANSPORTATION

Federal Aviation Administration

14 CFR Part 25

[Docket No. FAA–2012–1215; Notice No. 25–12–12–SC]

Special Conditions: Embraer S.A., Model EMB–550 Airplanes; Flight Envelope Protection: High Speed Limiting

AGENCY: Federal Aviation Administration (FAA), DOT.

ACTION: Notice of proposed special conditions.

SUMMARY: This action proposes special conditions for the Embraer S.A. Model EMB–550 airplane. This airplane will have a novel or unusual design feature, specifically an electronic flight control system which contains fly-by-wire control laws, including envelope protections, for the overspeed protection and roll limiting function. The applicable airworthiness regulations do not contain adequate or appropriate safety standards for this design feature. These proposed special conditions contain the additional safety standards that the Administrator considers necessary to establish a level of safety equivalent to that established by the existing airworthiness standards.

DATES: Send your comments on or before January 4, 2013.

ADDRESSES: Send comments identified by docket number FAA–2012–1215 using any of the following methods:

- *Federal eRegulations Portal:* Go to *http://www.regulations.gov/* and follow the online instructions for sending your comments electronically.
- *Mail:* Send comments to Docket Operations, M–30, U.S. Department of Transportation (DOT), 1200 New Jersey Avenue SE., Room W12–140, West Building Ground Floor, Washington, DC 20590–0001.
- *Hand Delivery or Courier:* Take comments to Docket Operations in Room W12–140 of the West Building Ground Floor at 1200 New Jersey Avenue SE., Washington, DC, between 8 a.m. and 5 p.m., Monday through Friday, except federal holidays.
- *Fax:* Fax comments to Docket Operations at 202–493–2251.

Privacy: The FAA will post all comments it receives, without change, to *http://www.regulations.gov/,* including any personal information the commenter provides. Using the search function of the docket Web site, anyone can find and read the electronic form of all comments received into any FAA docket, including the name of the individual sending the comment (or signing the comment for an association, business, labor union, etc.). DOT's complete Privacy Act Statement can be found in the **Federal Register** published on April 11, 2000 (65 FR 19477–19478), as well as at *http://DocketsInfo.dot.gov/.*

Docket: Background documents or comments received may be read at *http://www.regulations.gov/* at any time. Follow the online instructions for accessing the docket or go to the Docket Operations in Room W12–140 of the West Building Ground Floor at 1200 New Jersey Avenue SE., Washington, DC, between 9 a.m. and 5 p.m., Monday through Friday, except federal holidays.

FOR FURTHER INFORMATION CONTACT: Joe Jacobsen, FAA, Airplane and Flight Crew Interface Branch, ANM–111, Transport Airplane Directorate, Aircraft Certification Service, 1601 Lind Avenue SW., Renton, Washington 98057–3356; telephone 425–227–2011; facsimile 425–227–1149.

SUPPLEMENTARY INFORMATION:

Comments Invited

We invite interested people to take part in this rulemaking by sending written comments, data, or views. The most helpful comments reference a specific portion of the special conditions, explain the reason for any recommended change, and include supporting data.

We will consider all comments we receive on or before the closing date for comments. We may change these special conditions based on the comments we receive.

Background

On May 14, 2009, Embraer S.A. applied for a type certificate for their new Model EMB–550 airplane. The Model EMB–550 airplane is the first of a new family of jet airplanes designed for corporate flight, fractional, charter, and private owner operations. The aircraft has a conventional configuration with a low wing and T-tail empennage. The primary structure is metal with composite empennage and control surfaces. The Model EMB–550 airplane is designed for 8 passengers, with a maximum of 12 passengers. It is equipped with two Honeywell HTF7500–E medium bypass ratio turbofan engines mounted on aft fuselage pylons. Each engine produces approximately 6,540 pounds of thrust for normal takeoff. The primary flight controls consist of hydraulically powered fly-by-wire elevators, aileron and rudder, controlled by the pilot or copilot sidestick.

The longitudinal control law design of the Embraer S.A. Model EMB–550 airplane incorporates an overspeed protection system in the normal mode. This mode prevents the pilot from inadvertently or intentionally exceeding a speed approximately equivalent to V_{FC} or attaining V_{DF}. Current Title 14 Code of Federal Regulations (14 CFR) part 25 do not relate to a high speed limiter that might preclude or modify flying qualities assessments in the overspeed region.

Type Certification Basis

Under the provisions of 14 CFR 21.17, Embraer S.A. must show that the Model EMB–550 airplane meets the applicable provisions of part 25, as amended by Amendments 25–1 through 25–127 thereto.

If the Administrator finds that the applicable airworthiness regulations (i.e., 14 CFR part 25) do not contain adequate or appropriate safety standards for the Model EMB–550 airplane because of a novel or unusual design feature, special conditions are prescribed under the provisions of § 21.16.

Special conditions are initially applicable to the model for which they are issued. Should the type certificate for that model be amended later to include any other model that incorporates the same or similar novel or unusual design feature, the special conditions would also apply to the other model under § 21.101.

In addition to the applicable airworthiness regulations and special conditions, the Model EMB–550 airplane must comply with the fuel vent and exhaust emission requirements of 14 CFR part 34 and the noise certification requirements of 14 CFR part 36 and the FAA must issue a finding of regulatory adequacy under § 611 of Public Law 92–574, the ''Noise Control Act of 1972.''

The FAA issues special conditions, as defined in 14 CFR 11.19, in accordance with § 11.38, and they become part of the type-certification basis under § 21.17(a)(2).

Novel or Unusual Design Features

The Model EMB–550 airplane will incorporate the following novel or unusual design feature: An electronic flight control system which contains fly-by-wire control laws, including envelope protections, for the overspeed protection and roll limiting function. Current part 25 requirements do not contain appropriate standards for high speed protection systems.

Discussion

As further discussed previously, a special condition is necessary in addition to the requirements of § 25.143 for the operation of the high speed protection. The general intent is that the overspeed protection does not impede normal maneuvering and speed control and that the overspeed protection does not restrict or prevent emergency maneuvering. Therefore, these proposed special conditions contain the additional safety standards that the Administrator considers necessary to establish a level of safety equivalent to that established by the existing airworthiness standards.

Applicability

As discussed above, these special conditions are applicable to the Model EMB–550 airplane. Should Embraer S.A. apply at a later date for a change to the type certificate to include another model incorporating the same novel or unusual design feature, the special conditions would apply to that model as well.

Conclusion

This action affects only certain novel or unusual design features on one model of airplanes. It is not a rule of general applicability.

List of Subjects in 14 CFR Part 25

Aircraft, Aviation safety, Reporting and recordkeeping requirements.

The authority citation for these special conditions is as follows:

Authority: 49 U.S.C. 106(g), 40113, 44701, 44702, 44704.

The Proposed Special Conditions

Accordingly, the Federal Aviation Administration (FAA) proposes the following special conditions as part of the type certification basis for Embraer S.A. Model EMB–550 airplanes.

1. In addition to § 25.143, the following requirement applies: Operation of the high speed limiter during all routine and descent procedure flight must not impede normal attainment of speeds up to overspeed warning.

Issued in Renton, Washington, on November 14, 2012.

Ali Bahrami,

Manager, Transport Airplane Directorate, Aircraft Certification Service.

[FR Doc. 2012–28132 Filed 11–19–12; 8:45 am]

BILLING CODE 4910–13–P

DEPARTMENT OF TRANSPORTATION

Federal Aviation Administration

14 CFR Part 25

[Docket No. FAA–2012–1218; Notice No. 25–12–11–SC]

Special Conditions: Embraer S.A., Model EMB–550 Airplane; Electronic Flight Control System: Lateral-Directional and Longitudinal Stability and Low Energy Awareness

AGENCY: Federal Aviation Administration (FAA), DOT.

ACTION: Notice of proposed special conditions.

SUMMARY: This action proposes special conditions for the Embraer S.A. Model

EMB–550 airplane. This airplane will have a novel or unusual design feature(s) associated with an electronic flight control system with respect to lateral-directional and longitudinal stability and low energy awareness. The applicable airworthiness regulations do not contain adequate or appropriate safety standards for this design feature. These proposed special conditions contain the additional safety standards that the Administrator considers necessary to establish a level of safety equivalent to that established by the existing airworthiness standards.

DATES: Send your comments on or before January 4, 2013.

ADDRESSES: Send comments identified by docket number FAA–2012–1218 using any of the following methods:

- *Federal eRegulations Portal:* Go to *http://www.regulations.gov/* and follow the online instructions for sending your comments electronically.
- *Mail:* Send comments to Docket Operations, M–30, U.S. Department of Transportation (DOT), 1200 New Jersey Avenue SE., Room W12–140, West Building Ground Floor, Washington, DC 20590–0001.
- *Hand Delivery or Courier:* Take comments to Docket Operations in Room W12–140 of the West Building Ground Floor at 1200 New Jersey Avenue SE., Washington, DC, between 8 a.m. and 5 p.m., Monday through Friday, except federal holidays.
- *Fax:* Fax comments to Docket Operations at 202–493–2251.

Privacy: The FAA will post all comments it receives, without change, to *http://www.regulations.gov/*, including any personal information the commenter provides. Using the search function of the docket web site, anyone can find and read the electronic form of all comments received into any FAA docket, including the name of the individual sending the comment (or signing the comment for an association, business, labor union, etc.). DOT's complete Privacy Act Statement can be found in the **Federal Register** published on April 11, 2000 (65 FR 19477–19478), as well as at *http://DocketsInfo.dot.gov/.*

Docket: Background documents or comments received may be read at *http://www.regulations.gov/* at any time. Follow the online instructions for accessing the docket or go to the Docket Operations in Room W12–140 of the West Building Ground Floor at 1200 New Jersey Avenue SE., Washington DC, between 9 a.m. and 5 p.m., Monday through Friday, except federal holidays.

FOR FURTHER INFORMATION CONTACT: Joe Jacobsen, FAA, Airplane and Flight Crew Interface Branch, ANM–111 Transport Airplane Directorate, Aircraft Certification Service, 1601 Lind Avenue SW., Renton, Washington 98057–3356; telephone 425–227–2011; facsimile 425–227–1149.

SUPPLEMENTARY INFORMATION:

Comments Invited

We invite interested people to take part in this rulemaking by sending written comments, data, or views. The most helpful comments reference a specific portion of the special conditions, explain the reason for any recommended change, and include supporting data.

We will consider all comments we receive on or before the closing date for comments. We may change these special conditions based on the comments we receive.

Background

On May 14, 2009, Embraer S.A. applied for a type certificate for their new Model EMB–550 airplane. The Model EMB–550 airplane is the first of a new family of jet airplanes designed for corporate flight, fractional, charter, and private owner operations. The aircraft has a conventional configuration with low wing and T-tail empennage. The primary structure is metal with composite empennage and control surfaces. The Model EMB–550 airplane is designed for 8 passengers, with a maximum of 12 passengers. It is equipped with two Honeywell HTF7500–E medium bypass ratio turbofan engines mounted on aft fuselage pylons. Each engine produces approximately 6,540 pounds of thrust for normal takeoff. The primary flight controls consist of hydraulically powered fly-by-wire elevators, aileron and rudder, controlled by the pilot or copilot sidestick.

The Embraer S.A. Model EMB–550 airplane has a flight control design feature within the normal operational envelope in which sidestick deflection in the roll axis commands roll rate. As a result, the stick force in the roll axis will be zero (neutral stability) during the straight, steady sideslip flight maneuver required by Title 14, Code of Federal Regulations (14 CFR) 25.177(c) and will not be ''substantially proportional to the angle of sideslip'' as required by the rule.

The longitudinal flight control laws for the Model EMB–550 airplane provide neutral static stability within the normal operational envelope; therefore, the airplane design does not comply with the static longitudinal stability requirements of §§ 25.171, 25.173, and 25.175.

Static longitudinal stability provides awareness to the flightcrew of a low energy state (i.e., low speed and thrust at low altitude). Recovery from a low energy state may become hazardous when associated with a low altitude and performance-limiting conditions. These low energy situations must therefore be avoided, and pilots must be given adequate cues when approaching such situations.

Type Certification Basis

Under the provisions of 14 CFR 21.17, Embraer S.A. must show that the Model EMB–550 airplane meets the applicable provisions of part 25, as amended by Amendments 25–1 through 25–127 thereto.

If the Administrator finds that the applicable airworthiness regulations (i.e., 14 CFR part 25) do not contain adequate or appropriate safety standards for the Model EMB–550 airplane because of a novel or unusual design feature, special conditions are prescribed under the provisions of § 21.16.

Special conditions are initially applicable to the model for which they are issued. Should the type certificate for that model be amended later to include any other model that incorporates the same or similar novel or unusual design feature, the special conditions would also apply to the other model under § 21.101.

In addition to the applicable airworthiness regulations and special conditions, the Model EMB–550 airplane must comply with the fuel vent and exhaust emission requirements of 14 CFR part 34 and the noise certification requirements of 14 CFR part 36 and the FAA must issue a finding of regulatory adequacy under section 611 of Public Law 92–574, the ''Noise Control Act of 1972.''

The FAA issues special conditions, as defined in 14 CFR 11.19, in accordance with § 11.38, and they become part of the type-certification basis under § 21.17(a)(2).

Novel or Unusual Design Features

The Model EMB–550 airplane will incorporate the following novel or unusual design features:

(1) *Lateral-Directional Static Stability:* The electronic flight control system on the Model EMB–550 airplane contains fly-by-wire control laws that can result in neutral lateral-directional static stability; therefore, the conventional requirements in §§ 25.171, 25.173, 25.175, and 25.177 are not met.

Positive static directional stability is the tendency to recover from a skid with the rudder free. Positive static lateral

stability is the tendency to raise the low wing in a sideslip with the aileron controls free. These control criteria are intended to accomplish all of the following:

- Provide additional cues of inadvertent sideslips and skids through control force changes,
- Ensure that short periods of unattended operation do not result in any significant changes in yaw or bank angle,
- Provide predictable roll and yaw response, and
- Provide an acceptable level of pilot attention and workload to attain and maintain a coordinated turn.

The Flight Test Harmonization Working Group recommended a rule and advisory material change for § 25.177, Static lateral-directional stability, which was adopted at Amendment 25–135 (76 FR 74654, December 1, 2011), effective January 30, 2012. (This amendment is not in the Model EMB–550 certification basis.) That harmonized text formed the basis for these special conditions.

(2) *Longitudinal Static Stability:* Static longitudinal stability on airplanes with mechanical links to the pitch control surface means that a pull force on the controller will result in a reduction in speed relative to the trim speed, and a push force will result in higher than trim speed. Longitudinal stability is required by the regulations for the following reasons:

- Speed change cues are provided to the pilot through increased and decreased forces on the controller.
- Short periods of unattended control of the airplane do not result in significant changes in attitude, airspeed or load factor.
- A predictable pitch response is provided to the pilot.
- An acceptable level of pilot attention (workload) to attain and maintain trim speed and altitude is provided to the pilot.
- Longitudinal stability provides gust stability.

The pitch control movement of the sidestick on the Model EMB–550 airplane is designed to be a normal load factor or *g* command that results in an initial movement of the elevator surface to attain the commanded load factor that's then followed by integrated movement of the stabilizer and elevator to automatically trim the airplane to a neutral, 1*g,* stick-free stability. The flight path commanded by the initial sidestick input will remain, stick-free, until the pilot gives another command. This control function is applied during ''normal'' control law within the speed range from initiation of the angle of attack protection limit, to V_{MO}/M_{MO}. Once outside this speed range, the control laws introduce the conventional longitudinal static stability as described above.

As a result of neutral static stability, the Model EMB–550 airplane does not meet the 14 CFR part 25 requirements for static longitudinal stability.

(3) *Low Energy Awareness:* Past experience on airplanes fitted with a flight control system providing neutral longitudinal stability shows there is insufficient feedback cues to the pilot of excursion below normal operational speeds. The maximum angle of attack protection system limits the airplane angle of attack and prevents stall during normal operating speeds, but this system is not sufficient to prevent stall at low speed excursions below normal operational speeds. Until intervention, there are no stability cues since the airplane remains trimmed. Additionally, feedback from the pitching moment due to thrust variation is reduced by the flight control laws. Recovery from a low speed excursion may become hazardous when the low speed situation is associated with a low altitude and with the engines at low thrust or with performance-limiting conditions.

Discussion

In the absence of positive lateral stability, the curve of lateral control surface deflections against sideslip angle should be in a conventional sense, and reasonably in harmony with rudder deflection during steady heading sideslip maneuvers.

Since conventional relationships between stick forces and control surface displacements do not apply to the ''load factor command'' flight control system on the Model EMB–550 airplane, longitudinal stability characteristics should be evaluated by assessing the airplane handling qualities during simulator and flight test maneuvers appropriate to operation of the airplane. This may be accomplished by using the Handling Qualities Rating Method presented in Appendix 7 of Advisory Circular (AC) 25–7B, *Flight Test Guide,* dated March 29, 2011, or an acceptable alternative method proposed by Embraer S.A.. Important considerations are as follows:

- Adequate speed control without creating excessive pilot workload,
- Acceptable high and low speed protection, and
- Providing adequate cues to the pilot of significant speed excursions beyond V_{MO}/M_{MO}, and low speed awareness flight conditions.

The airplane should provide adequate awareness cues to the pilot of a low energy (i.e., a low speed, low thrust, or low height) state to ensure that the airplane retains sufficient energy to recover when flight control laws provide neutral longitudinal stability significantly below the normal operating speeds. This may be accomplished as follows:

- Adequate low speed/low thrust cues at low altitude may be provided by a strong positive static stability force gradient (1 pound per 6 knots applied through the sidestick), or
- The low energy awareness may be provided by an appropriate warning with the following characteristics:
  - It should be unique, unambiguous, and unmistakable.
  - It should be active at appropriate altitudes and in appropriate configurations (e.g., at low altitude, in the approach and landing configurations).
  - It should be sufficiently timely to allow recovery to a stabilized flight condition inside the normal flight envelope while maintaining the desired flight path and without entering the flight controls angle-of-attack protection mode.
  - It should not be triggered during normal operation, including operation in moderate turbulence for recommended maneuvers at recommended speeds.
  - The pilot should only be able to cancel it by achieving a higher energy state.
  - An adequate hierarchy should exist among the warnings so that the pilot is not confused and led to take inappropriate recovery action if multiple warnings occur.

Simulators and flight test should evaluate global energy awareness and ensure that low energy cues are not a nuisance in all take-off and landing altitude ranges for which certification is requested. These evaluations should include all relevant combinations of weight, center of gravity position, configuration, airbrakes position, and available thrust, including reduced and derated take-off thrust operations and engine failure cases. A sufficient number of tests should be conducted to assess the level of energy awareness and the effects of energy management errors. These proposed special conditions contain the additional safety standards that the Administrator considers necessary to establish a level of safety equivalent to that established by the existing airworthiness standards.

Applicability

As discussed above, these special conditions are applicable to the Model EMB–550 airplane. Should Embraer

S.A. apply at a later date for a change to the type certificate to include another model incorporating the same novel or unusual design feature, the special conditions would apply to that model as well.

Conclusion

This action affects only certain novel or unusual design features on one model of airplanes. It is not a rule of general applicability.

List of Subjects in 14 CFR Part 25

Aircraft, Aviation safety, Reporting and recordkeeping requirements.

The authority citation for these special conditions is as follows:

Authority: 49 U.S.C. 106(g), 40113, 44701, 44702, 44704.

The Proposed Special Conditions

Accordingly, the Federal Aviation Administration (FAA) proposes the following special conditions as part of the type certification basis for Model EMB–550 airplanes.

1. Electronic Flight Control System: Lateral-Directional and Longitudinal Stability and Low Energy Awareness. In lieu of the requirements of §§ 25.171, 25.173, 25.175, and 25.177, the following special conditions apply:

a. The airplane must be shown to have suitable static lateral, directional, and longitudinal stability in any condition normally encountered in service, including the effects of atmospheric disturbance. The showing of suitable static lateral, directional, and longitudinal stability must be based on the airplane handling qualities, including pilot workload and pilot compensation, for specific test procedures during the flight test evaluations.

b. The airplane must provide adequate awareness to the pilot of a low energy (e.g., low speed, low thrust, or low height) state when fitted with flight control laws presenting neutral longitudinal stability significantly below the normal operating speeds. ''Adequate awareness'' means warning information must be provided to alert the crew of unsafe operating conditions and to enable them to take appropriate corrective action.

c. The static directional stability (as shown by the tendency to recover from a skid with the rudder free) must be positive for any landing gear and flap position and symmetrical power condition, at speeds from 1.13 V_{SR1}, up to V_{FE}, V_{LE}, or V_{FC}/M_{FC} (as appropriate).

d. The static lateral stability (as shown by the tendency to raise the low wing in a sideslip with the aileron controls free) for any landing gear and wing-flap position and symmetric power condition, may not be negative at any airspeed (except that speeds higher than V_{FE} need not be considered for wing-flaps extended configurations nor speeds higher than V_{LE} for landing gear extended configurations) in the following airspeed ranges:

i. From 1.13 V_{SR1} to V_{MO}/M_{MO}.

ii. From V_{MO}/M_{MO} to V_{FC}/M_{FC}, unless the divergence is—

1. Gradual;

2. Easily recognizable by the pilot; and

3. Easily controllable by the pilot.

e. In straight, steady sideslips over the range of sideslip angles appropriate to the operation of the airplane, but not less than those obtained with one-half of the available rudder control movement (but not exceeding a rudder control force of 180 pounds), rudder control movements and forces must be substantially proportional to the angle of sideslip in a stable sense; and the factor of proportionality must lie between limits found necessary for safe operation. This requirement must be met for the configurations and speeds specified in paragraph (c) of this section.

f. For sideslip angles greater than those prescribed by paragraph (e) of this section, up to the angle at which full rudder control is used or a rudder control force of 180 pounds is obtained, the rudder control forces may not reverse, and increased rudder deflection must be needed for increased angles of sideslip. Compliance with this requirement must be shown using straight, steady sideslips, unless full lateral control input is achieved before reaching either full rudder control input or a rudder control force of 180 pounds; a straight, steady sideslip need not be maintained after achieving full lateral control input. This requirement must be met at all approved landing gear and wing-flap positions for the range of operating speeds and power conditions appropriate to each landing gear and wing-flap position with all engines operating.

Issued in Renton, Washington, on November 14, 2012.

Ali Bahrami,

Manager, Transport Airplane Directorate, Aircraft Certification Service.

[FR Doc. 2012–28115 Filed 11–19–12; 8:45 am]

BILLING CODE 4910–13–P

DEPARTMENT OF HOMELAND SECURITY

Coast Guard

33 CFR Part 117

[Docket No. USCG–2012–0911]

RIN 1625–AA09

Drawbridge Operation Regulation; Thea Foss Waterway Previously Known as City Waterway, Tacoma, WA

AGENCY: Coast Guard, DHS.

ACTION: Notice of proposed rulemaking.

SUMMARY: The Coast Guard proposes to modify the operating schedule that governs the Murray Morgan Bridge, also known as the South 11th Street Bridge, across Thea Foss Waterway, mile 0.6, previously known as City Waterway, at Tacoma, WA. This proposed rule would allow more efficient staffing of the bridge operating crew by requiring advance notification for bridge openings during designated hours. This proposed rule will also remove existing authorized closure periods for the bridge to better reflect present day transportation needs. Lastly, this proposed change will update contact information for requesting emergency bridge openings.

DATES: Comments and related material must reach the Coast Guard on or before January 4, 2013.

ADDRESSES: You may submit comments identified by docket number USCG–2012–0911 using any one of the following methods:

(1) *Federal eRulemaking Portal: http://www.regulations.gov.*

(2) *Fax:* 202–493–2251.

(3) *Mail or Delivery:* Docket Management Facility (M–30), U.S. Department of Transportation, West Building Ground Floor, Room W12–140, 1200 New Jersey Avenue SE., Washington, DC 20590–0001. Deliveries accepted between 9 a.m. and 5 p.m., Monday through Friday, except federal holidays. The telephone number is 202–366–9329.

See the ''Public Participation and Request for Comments'' portion of the **SUPPLEMENTARY INFORMATION** section below for instructions on submitting comments. To avoid duplication, please use only one of these four methods.

FOR FURTHER INFORMATION CONTACT: If you have questions on this rule, call or email the Bridge Administrator, Coast Guard Thirteenth District; telephone 206–220–7282 email *randall.d.overton@uscg.mil.* If you have questions on viewing or submitting material to the docket, call Renee V.

Wright, Program Manager, Docket Operations, telephone 202–366–9826.

SUPPLEMENTARY INFORMATION:

Table of Acronyms

CFR Code of Federal Regulations
DHS Department of Homeland Security
FR **Federal Register**
NPRM Notice of Proposed Rulemaking
§ Section Symbol
U.S.C. United States Code

A. Public Participation and Request for Comments

We encourage you to participate in this rulemaking by submitting comments and related materials. All comments received will be posted, without change to *http://www.regulations.gov* and will include any personal information you have provided.

1. Submitting Comments

If you submit a comment, please include the docket number for this rulemaking (USCG–2012–0911), indicate the specific section of this document to which each comment applies, and provide a reason for each suggestion or recommendation. You may submit your comments and material online (*http://www.regulations.gov*), or by fax, mail or hand delivery, but please use only one of these means. If you submit a comment online via *http://www.regulations.gov,* it will be considered received by the Coast Guard when you successfully transmit the comment. If you fax, hand deliver, or mail your comment, it will be considered as having been received by the Coast Guard when it is received at the Docket Management Facility. We recommend that you include your name and a mailing address, an email address, or a phone number in the body of your document so that we can contact you if we have questions regarding your submission.

To submit your comment online, go to *http://www.regulations.gov*, click on the ''submit a comment'' box, which will then become highlighted in blue. In the ''Document Type'' drop down menu select ''Proposed Rules'' and insert ''USCG–2012–0911'' in the ''Keyword'' box. Click ''Search'' then click on the balloon shape in the ''Actions'' column. If you submit your comments by mail or hand delivery, submit them in an unbound format, no larger than 8½ by 11 inches, suitable for copying and electronic filing. If you submit them by mail and would like to know that they reached the Facility, please enclose a stamped, self-addressed postcard or envelope. We will consider all comments and material received during the comment period and may change the rule based on your comments.

2. Viewing Comments and Documents

To view comments, as well as documents mentioned in this preamble as being available in the docket, go to *http://www.regulations.gov*, click on the ''read comments'' box, which will then become highlighted in blue. In the ''Keyword'' box insert ''USCG–2012–0911'' and click ''Search.'' Click the ''Open Docket Folder'' in the ''Actions'' column. You may also visit the Docket Management Facility in Room W12–140 on the ground floor of the Department of Transportation West Building, 1200 New Jersey Avenue SE., Washington, DC 20590, between 9 a.m. and 5 p.m., Monday through Friday, except Federal holidays. We have an agreement with the Department of Transportation to use the Docket Management Facility.

3. Privacy Act

Anyone can search the electronic form of comments received into any of our dockets by the name of the individual submitting the comment (or signing the comment, if submitted on behalf of an association, business, labor union, etc.). You may review a Privacy Act notice regarding our public dockets in the January 17, 2008, issue of the **Federal Register** (73 FR 3316).

4. Public Meeting

We do not now plan to hold a public meeting. But you may submit a request for one on or before December 20, 2012, using one of the four methods specified under **ADDRESSES.** Please explain why one would be beneficial. If we determine that a public meeting would aid this rulemaking, we will hold one at a time and place announced by a later notice in the **Federal Register**.

B. Regulatory History and Information

Presently the bridge operates under 33 CFR 117.1061 which requires a two hour notice for an opening and allows the bridge to not open during morning and afternoon rush hours. This proposed rule will eliminate the authorized closure during the morning and afternoon rush hour and it will add an additional advance notification for bridge openings between 10 p.m. and 8 a.m. Waterway users and Marine Facilities in the vicinity of the bridge have received direct email correspondence to inform them of the proposed rule. Additionally the Coast Guard has issued a temporary deviation to test the proposed rule and to gather comments or concerns about the proposed rule. The temporary test deviation may be found online at *http://www.regulations.gov*, under docket number USCG–2012–0911.

C. Basis and Purpose

The Coast Guard, at the request of the City of Tacoma, proposes to change the regulation which governs the operating schedule of the Murray Morgan Bridge. This proposed change will allow the City of Tacoma to staff the bridge operating crew more efficiently and will better accommodate present day transportation needs. This proposed change will also update contact information needed to request emergency openings of the bridge.

D. Discussion of Proposed Rule

Three amendments to the existing operating regulation are being proposed for the Murray Morgan Bridge. The first proposed amendment would require that for bridge openings between 10 p.m. and 8 a.m., notification be made no later than 8 p.m. prior to the desired opening. This differs from the existing regulation in that presently the bridge is required to open at all times (except during authorized closure periods) provided two hours advance notice is given. This amendment for notification by 8 p.m. for openings between 10 p.m. and 8 a.m. is being proposed because openings between 10 p.m. and 8 a.m. are extremely rare. Over an 18 month period there were only 6 bridge openings requested between 10 p.m. and 8 a.m. which averages one bridge opening request per three month period. One of the unique features of the Murray Morgan Bridge is its height above the waterway providing 60 feet of clearance at mean high water (MHW) in the closed position. Because of this vertical clearance the overwhelming majority of vessels which transit this waterway do not require a bridge opening. The majority of bridge openings are for locally moored and operated recreational sailboats with mast heights over 60 feet. Almost all of these vessels are moored at marinas in very close proximity of the bridge.

The second amendment proposed to the regulation is to remove the authorized morning and afternoon bridge closure periods. The current regulation states that the draw need not be opened from 6:30 a.m. to 8:30 a.m. and 3:30 p.m. to 5:30 p.m. Monday through Friday, for vessels of less than 1,000 gross tons. This proposed change would require the draw to open at all times with proper advance notification. The morning and afternoon authorized closures of the bridge outlined in the existing regulation were put into place when the bridge was part of SR 509, a

continuous route from Northeast Tacoma to downtown, and traffic volumes were approximately 15,000 vehicles per day. In 1997 a new SR 509 was constructed approximately 0.7 miles south of the bridge and is now used as the main traffic corridor. After completion of the new SR 509, the Murray Morgan Bridge connection between Northeast Tacoma and downtown was severed due to roadway reconfiguration, resulting in traffic volumes dropping dramatically; therefore, the bridge no longer conveys high volumes of traffic during the morning and afternoon rush hours.

The third proposed amendment to the existing regulation changes the contact information for emergency bridge openings. The existing regulation states ''In emergencies, openings shall be made as soon as possible upon notification to the Washington State Department of Transportation.'' The proposed change would state notification for emergency opening would be made to the City of Tacoma. The reason for this change is because Washington State turned over ownership and responsibility of the bridge to the City of Tacoma on January 6, 1998. To help evaluate these proposed changes the Coast Guard has issued a Temporary Deviation from the operating schedule that governs the Murray Morgan Bridge. The Temporary Deviation mirrors the regulation changes proposed in this document. Comments may be submitted for the Temporary Deviation following the same procedure as outlined in the ''Public Participation and Request for Comments'' portion of the **SUPPLEMENTARY INFORMATION** section of this notice.

E. Regulatory Analyses

We developed this proposed rule after considering numerous statutes and executive orders related to rulemaking. Below we summarize our analyses based on a number of these statutes or executive orders.

1. Regulatory Planning and Review

This proposed rule is not a ''significant regulatory action'' under section 3(f) of Executive Order 12866, Regulatory Planning and Review, as supplemented by Executive Order 13563, Improving Regulation and Regulatory Review, and does not require an assessment of potential costs and benefits under section 6(a)(3) of Order 12866 or under section 1 of Executive Order 13563. The Office of Management and Budget has not reviewed it under those Orders.

We expect the economic impact of this proposed rule to be insignificant and therefore a full Regulatory Evaluation is unnecessary. Very few vessels will be impacted because all requested bridge openings will be granted with advance notification.

2. Impact on Small Entities

Under the Regulatory Flexibility Act (5 U.S.C. 601–612), we have considered the impact of this proposed rule on small entities. The Coast Guard certifies under 5 U.S.C. 605(b) that this proposed rule would not have a significant economic impact on a substantial number of small entities. This action will not have a significant economic impact on a substantial number of small entities because it does not authorize closure periods for the bridge. Additionally, because the bridge provides 60 feet of vertical clearance when it is in the closed position only a very few numbers of vessels using the waterway require a bridge opening to transit the area. The vessels that require a bridge opening are primarily privately owned tall mast sailboats moored in close proximity of the bridge. Vessels which do require an opening will be granted an opening without delay when appropriate notification is given.

If you think that your business, organization, or governmental jurisdiction qualifies as a small entity and that this rule would have a significant economic impact on it, please submit a comment (see **ADDRESSES**) explaining why you think it qualifies and how and to what degree this rule would economically affect it.

3. Assistance for Small Entities

Under section 213(a) of the Small Business Regulatory Enforcement Fairness Act of 1996 (Pub. L. 104–121), we want to assist small entities in understanding this proposed rule. If the rule would affect your small business, organization, or governmental jurisdiction and you have questions concerning its provisions or options for compliance, please contact the person listed in the **FOR FURTHER INFORMATION CONTACT**, above. The Coast Guard will not retaliate against small entities that question or complain about this proposed rule or any policy or action of the Coast Guard.

4. Collection of Information

This proposed rule would call for no new collection of information under the Paperwork Reduction Act of 1995 (44 U.S.C. 3501–3520.).

5. Federalism

A rule has implications for federalism under Executive Order 13132, Federalism, if it has a substantial direct effect on the States, on the relationship between the national government and the States, or on the distribution of power and responsibilities among the various levels of government. We have analyzed this proposed rule under that Order and have determined that it does not have implications for federalism.

6. Protest Activities

The Coast Guard respects the First Amendment rights of protesters. Protesters are asked to contact the person listed in the **FOR FURTHER INFORMATION CONTACT** section to coordinate protest activities so that your message can be received without jeopardizing the safety or security of people, places or vessels.

7. Unfunded Mandates Reform Act

The Unfunded Mandates Reform Act of 1995 (2 U.S.C. 1531–1538) requires Federal agencies to assess the effects of their discretionary regulatory actions. In particular, the Act addresses actions that may result in the expenditure by a State, local, or tribal government, in the aggregate, or by the private sector of $100,000,000 (adjusted for inflation) or more in any one year. Though this proposed rule will not result in such an expenditure, we do discuss the effects of this rule elsewhere in this preamble.

8. Taking of Private Property

This proposed rule would not cause a taking of private property or otherwise have taking implications under Executive Order 12630, Governmental Actions and Interference with Constitutionally Protected Property Rights.

9. Civil Justice Reform

This proposed rule meets applicable standards in sections 3(a) and 3(b)(2) of Executive Order 12988, Civil Justice Reform, to minimize litigation, eliminate ambiguity, and reduce burden.

10. Protection of Children

We have analyzed this proposed rule under Executive Order 13045, Protection of Children from Environmental Health Risks and Safety Risks. This rule is not an economically significant rule and would not create an environmental risk to health or risk to safety that might disproportionately affect children.

11. Indian Tribal Governments

This proposed rule does not have tribal implications under Executive Order 13175, Consultation and Coordination with Indian Tribal Governments, because it would not have a substantial direct effect on one or more Indian tribes, on the relationship between the Federal Government and Indian tribes, or on the distribution of power and responsibilities between the Federal Government and Indian tribes.

12. Energy Effects

This proposed rule is not a ''significant energy action'' under Executive Order 13211, Actions Concerning Regulations That Significantly Affect Energy Supply, Distribution, or Use because it is not a ''significant regulatory action'' under Executive Order 12866 and is not likely to have a significant adverse effect on the supply, distribution, or use of energy. The Administrator of the Office of Information and Regulatory Affairs has not designated it as a significant energy action. Therefore, it does not require a Statement of Energy Effects under Executive Order 13211.

13. Technical Standards

This proposed rule does not use technical standards. Therefore, we did not consider the use of voluntary consensus standards.

14. Environment

We have analyzed this rule under Department of Homeland Security Management Directive 023–01 and Commandant Instruction M16475.lD, which guides the Coast Guard in complying with the National Environmental Policy Act of 1969 (NEPA)(42 U.S.C. 4321–4370f), and have made a preliminary determination that this action is one of a category of actions which do not individually or cumulatively have a significant effect on the human environment. This proposed rule simply promulgates the operating regulations or procedures for drawbridges. This rule is categorically excluded, under figure 2–1, paragraph (32)(e), of the Instruction.

Under figure 2–1, paragraph (32)(e), of the Instruction, an environmental analysis checklist and a categorical exclusion determination are not required for this rule. We seek any comments or information that may lead to the discovery of a significant environmental impact from this proposed rule.

List of Subjects in 33 CFR Part 117

Bridges.

For the reasons discussed in the preamble, the Coast Guard proposes to amend 33 CFR part 117 as follows:

PART 117—DRAWBRIDGE OPERATION REGULATIONS

1. The authority citation for part 117 continues to read as follows:

Authority: 33 U.S.C. 499; 33 CFR 1.05–1; Department of Homeland Security Delegation No. 0170.1.

2. Amend § 117.1061 to revise paragraph (b) to read as follows:

§ 117.1061 Tacoma Harbor.

* * * * *

(b) The draw of the Murray Morgan Bridge, also known as the South 11th Street Bridge, across Thea Foss Waterway, previously known as City Waterway, mile 0.6, at Tacoma, shall open on signal if at least two hours notice is given. However, to obtain a bridge opening between 10 p.m. and 8 a.m., notification must be made to the City of Tacoma by 8 p.m. In emergencies, openings shall be made as soon as possible upon notification to the City of Tacoma.

Dated: November 2, 2012.

K.A. Taylor,

Rear Admiral, U. S. Coast Guard Commander, Thirteenth Coast Guard District.

[FR Doc. 2012–28130 Filed 11–19–12; 8:45 am]

BILLING CODE 9110–04–P

DEPARTMENT OF EDUCATION

34 CFR Chapter IV

[Docket ID ED–2012–OVAE–0053]

Proposed Requirements, Definitions, and Selection Criteria—Native American Career and Technical Education Program (NACTEP)

AGENCY: Office of Vocational and Adult Education, Department of Education.

ACTION: Proposed requirements, definitions, and selection criteria.

Catalog of Federal Domestic Assistance (CFDA) Number: 84.101A.

SUMMARY: The Assistant Secretary for Vocational and Adult Education proposes requirements, definitions, and selection criteria under the Native American Career and Technical Education Program (NACTEP). The Assistant Secretary may use these requirements, definitions, and selection criteria for a competition in fiscal year (FY) 2013 and possibly in later years. The requirements, definitions, and selection criteria we propose in this notice are the same as those we used in the notice inviting applications for the first NACTEP competition we held in FY 2007 (see **Federal Register** March 23, 2007 (72 FR 13770) (March 2007 notice)) following the enactment of the Carl D. Perkins Career and Technical Education Act of 2006 (Act). In the March 2007 notice, we established these requirements, definitions, and selection criteria pursuant to a waiver of rulemaking under the authority of section 457(d) of the General Education Provisions Act. Because the project period for NACTEP grants awarded in FY 2007 will end in September 2013, we are publishing the NACTEP requirements, definitions, and selection criteria for public comment. When published in final, these requirements, definitions, and selection criteria would govern the next NACTEP competition and possibly also subsequent NACTEP competitions.

DATES: We must receive your comments on or before December 20, 2012.

ADDRESSES: Submit your comments through the Federal eRulemaking Portal or via postal mail, commercial delivery, or hand delivery. We will not accept comments by fax or by email. To ensure that we do not receive duplicate copies, please submit your comments only once. In addition, please include the Docket ID at the top of your comments.

- *Federal eRulemaking Portal:* Go to *www.regulations.gov* to submit your comments electronically. Information on using Regulations.gov, including instructions for accessing agency documents, submitting comments, and viewing the docket, is available on the site under ''How to Use This Site.''
- *Postal Mail, Commercial Delivery, or Hand Delivery:* If you mail or deliver your comments about these proposed requirements, definitions, and selection criteria, address them to Gwen Washington, U.S. Department of Education, 400 Maryland Avenue SW., room 11076, Potomac Center Plaza, Washington, DC 20202–7241; or Linda Mayo, U.S. Department of Education, 400 Maryland Avenue SW., Room 11075, Potomac Center Plaza, Washington, DC 20202–7241.

Privacy Note: The Department's policy is to make all comments received from members of the public available for public viewing in their entirety on the Federal eRulemaking Portal at *www.regulations.gov.* Therefore, commenters should be careful to include in their comments only information that they wish to make publicly available.

FOR FURTHER INFORMATION CONTACT: Gwen Washington, by telephone: (202) 245–7790, or by email: *gwen.washington@ed.gov;* or Linda

Mayo, by telephone: (202) 245–7792, or by email: *linda.mayo@ed.gov.*

If you use a telecommunications device for the deaf (TDD) or a text telephone (TTY), call the Federal Relay Service (FRS), toll free, at 1–800–877–8339.

SUPPLEMENTARY INFORMATION:

Invitation to Comment: We invite you to submit comments regarding this notice. To ensure that your comments have maximum effect in developing the notice of final requirements, definitions, and selection criteria, we urge you to identify clearly the specific proposed requirement, definition, or selection criterion that each comment addresses.

We invite you to assist us in complying with the specific requirements of Executive Order 12866 and its overall requirement of reducing regulatory burden that might result from these proposed requirements, definitions, and selection criteria. Please let us know of any further ways we could reduce potential costs or increase potential benefits while preserving the effective and efficient administration of the program.

During and after the comment period, you may inspect all public comments about these proposed requirements, definitions, and selection criteria by accessing Regulations.gov. You may also inspect the comments in person in rooms 11076/11075, 550–12th Street SW., Washington, DC, between 8:30 a.m. and 4:00 p.m., Washington, DC time, Monday through Friday of each week except Federal holidays. Please contact the persons listed under **FOR FURTHER INFORMATION CONTACT**.

Assistance to Individuals With Disabilities in Reviewing the Rulemaking Record: On request we will provide an appropriate accommodation or auxiliary aid to an individual with a disability who needs assistance to review the comments or other documents in the public rulemaking record for this notice. If you want to schedule an appointment for this type of accommodation or auxiliary aid, please contact the person listed under **FOR FURTHER INFORMATION CONTACT**.

Purpose of Program: Under NACTEP, the Secretary provides grants, cooperative agreements, or enters into contracts with Indian tribes, tribal organizations, or Alaska Native entities to improve career and technical education programs that are consistent with the purposes of the Act and that benefit Native Americans and Alaska Natives.

Program Authority: 20 U.S.C. 2301 et seq., particularly 2326(a)–(g).

Proposed Requirements, Definitions, and Selection Criteria

Background

Section 116 of the Act authorizes the Secretary to award grants, cooperative agreements, or enter into contracts with Indian tribes, tribal organizations, and Alaska Native entities to operate career and technical education projects that improve career and technical education for Native American and Alaska Native students. Bureau-funded schools are eligible under NACTEP, except for Bureau-funded schools proposing to use their awards to support secondary school career and technical education programs. Any Indian tribe, tribal organization, Alaska Native entity, or eligible Bureau-funded school may apply individually or as part of a consortium with one or more eligible tribes, tribal organizations, Alaska Native entities, or eligible Bureau-funded schools. (Eligible applicants seeking to apply for funds as a consortium must meet the requirements in 34 CFR 75.127–75.129, which apply to group applications.)

The Act also provides in the statement of purpose that programs funded under the Act should build on the efforts of States and localities to develop challenging academic and technical standards and to assist students in meeting such standards, including in preparation for high-skill, high-wage, or high-demand occupations in emerging or established professions. (20 U.S.C. 2301(1)) In addition, programs are required to provide technical assistance that promotes leadership, initial preparation, and professional development and improves the quality of career and technical education teachers, faculty, administrators, and counselors. (20 U.S.C. 2301(5)) Additionally, the Act's purpose section calls for supporting partnerships among secondary schools, postsecondary institutions, baccalaureate degree-granting institutions, area career and technical education schools, local workforce investment boards, business and industry, and intermediaries, as well as for providing, in conjunction with other education and training programs, individuals with opportunities throughout their lives to develop the knowledge and skills needed to keep the United States competitive. (20 U.S.C. 2301(6) and (7))

We are not including in this notice, or seeking public comment on, requirements or definitions contained in the Act, in Federal statutory provisions cross-referenced in the Act, in the Education Department General Administrative Regulations (EDGAR), or in any other applicable, existing regulations. For the convenience of eligible applicants, in our notice announcing the next NACTEP competition we plan to discuss statutory program requirements and definitions, and key applicable regulatory provisions, as we did in the March 2007 notice inviting applications.

Proposed Requirements

I. Demonstration of Eligibility

(a) We propose that an eligible applicant (as determined by the Act) must include documentation in its application showing that it and, if appropriate, its consortium members are eligible to apply.

(b) As defined in the Indian Self-Determination and Education Assistance Act (ISDEA) (25 U.S.C. 450b(l)) the term ''tribal organization'' means the recognized governing body of any Indian tribe; any legally established organization of Indians which is controlled, sanctioned, or chartered by such governing body or which is democratically elected by the adult members of the Indian community to be served by such organization and which includes the maximum participation of Indians in all phases of its activities: provided, that in any case where a contract is let or grant made to an organization to perform services benefiting more than one Indian tribe, the approval of each such Indian tribe shall be a prerequisite to the letting or making of such contract or grant. In accordance with this statutory definition, we propose that any tribal organization proposing to provide NACTEP services for the benefit of more than one Indian tribe must first obtain the approval of each Indian tribe it proposes to serve and must submit documentation of such approval with its NACTEP application and that documentation of tribal approval be a prerequisite to the awarding of a NACTEP grant to any tribal organization proposing to serve more than one Indian tribe.

II. Authorized Programs, Services, and Activities

Consistent with the Act, the Secretary proposes the following requirements, to align NACTEP with other authorized programs that require recipients of funds under the Act to develop challenging academic standards and improve career and technical education.

(a) *Authorized programs.* Section 116(e) of the Act requires the Secretary to ensure that activities funded under NACTEP ''will improve career and

technical education programs'' (20 U.S.C. 2326(e)). Therefore, the Secretary proposes to award grants to carry out projects that—

(1) Propose organized educational activities offering a sequence of courses that—

(i) Provide individuals with coherent and rigorous content aligned with challenging academic standards and relevant technical knowledge and skills needed to prepare for further education and careers in current or emerging professions;

(ii) Provide technical skill proficiency, an industry-recognized credential, a certificate, or an associate degree; and

(iii) Include competency-based applied learning that contributes to the academic knowledge, higher-order reasoning and problem-solving skills, work attitudes, general employability skills, technical skills, and occupation-specific skills, and knowledge of all aspects of an industry, including entrepreneurship, of an individual. Projects may include prerequisite courses (other than remedial courses) that meet the definitional requirements of section 3(5) of the Act. (20 U.S.C. 2302(5)) In addition, at the secondary level, coherent and rigorous academic curriculum must be aligned with challenging academic content standards and student academic achievement standards in reading or language arts and in mathematics that the State in which the applicant is located has established under the Elementary and Secondary Education Act, as amended (20 U.S.C. 6301 *et seq.*) Contacts for State ESEA programs may be found on the Internet at: *http://www.ed.gov/about/contacts/state/index.html.*

(2) Develop new programs, services, or activities or improve or expand existing programs, services, or activities that are consistent with the purposes of the Act. In other words, the Department will support ''expansions'' or ''improvements'' that include, but are not limited to, the expansion of effective programs or practices; upgrading of activities, equipment, or materials; increasing staff capacity; adoption of new technology; modification of curriculum; or implementation of new policies to improve program effectiveness and outcomes.

(3) Fund a career and technical education program, service, or activity that—

(i) Is a new program, service, or activity that was not provided by the applicant during the instructional term (a defined period, such as a semester, trimester, or quarter, within the academic year) that preceded the request for funding under NACTEP;

(ii) Will improve or expand an existing career and technical education program; or

(iii) Inherently improves career and technical education.

Note: A program, service, or activity ''inherently improves career and technical education'' if it—

(a) Develops new career and technical education programs of study that will be approved by the appropriate accreditation agency;

(b) Strengthens the rigor of the academic and career and technical components of funded programs;

(c) Uses curriculum that is aligned with industry-recognized standards and will result in students attaining industry-recognized credentials, certificates, or degrees;

(d) Integrates academics (other than remedial courses) with career and technical education programs through a coherent sequence of courses to ensure learning in the core academic and career and technical subjects;

(e) Links career and technical education at the secondary level with career and technical education at the postsecondary level and facilitates students' pursuit of a baccalaureate degree;

(f) Expands the scope, depth, and relevance of curriculum, especially content that provides students with a comprehensive understanding of all aspects of an industry and a variety of hands-on, job-specific experiences; and

(g) Offers—

(1) Work-related experience, internships, cooperative education, school-based enterprises, entrepreneurship, community service learning, and job shadowing that are related to career and technical education programs;

(2) Coaching/mentoring, support services, and extra help for students after school, on weekends and/or during the summers, so they can meet higher standards;

(3) Career guidance and academic counseling for students participating in career and technical education programs;

(4) Placement services for students who have successfully completed career and technical education programs and attained a technical skill proficiency that is aligned with industry-recognized standards;

(5) Professional development programs for teachers, counselors, and administrators;

(6) Strong partnerships among grantees and local educational agencies, postsecondary institutions, community leaders, adult education providers, and, as appropriate, other entities, such as employers, labor organizations, parents, and local partnerships, to enable students to achieve State academic standards and career and technical skills;

(7) The use of student assessment and evaluation data to improve continually instruction and staff development with the goal of increasing student achievement in career and technical education programs; or

(8) Research, development, demonstration, dissemination, evaluation and assessment, capacity-building, and technical assistance, related to career and technical education programs.

(b) *Student stipends.* In accordance with section 116(c)(2) of the Act, a portion of an award under this program may be used to provide stipends (as defined in the Definitions section of this notice) to one or more students to help meet the students' costs of participation in a NACTEP project. We propose the following procedures for determining student eligibility for stipends and appropriate amounts to be awarded as stipends:

(1) To be eligible for a stipend a student must—

(i) Be enrolled in a career and technical education project funded under this program;

(ii) Be in regular attendance in a NACTEP project and meet the training institution's attendance requirement;

(iii) Maintain satisfactory progress in his or her program of study according to the training institution's published standards for satisfactory progress; and

(iv) Have an acute economic need that—

(A) Prevents participation in a project funded under this program without a stipend; and

(B) Cannot be met through a work-study program.

(2) The amount of a stipend is the greater of either the minimum hourly wage prescribed by State or local law or the minimum hourly wage established under the Fair Labor Standards Act.

(3) A grantee may only award a stipend if the stipend combined with other resources the student receives does not exceed the student's financial need. A student's financial need is the difference between the student's cost of attendance and the financial aid or other resources available to defray the student's cost of participating in a NACTEP project.

(4) To calculate the amount of a student's stipend, a grantee would multiply the number of hours a student actually attends career and technical education instruction by the amount of the minimum hourly wage that is prescribed by State or local law, or by the minimum hourly wage that is established under the Fair Labor Standards Act.

Example: If a grantee uses the Fair Labor Standards Act minimum hourly wage of $7.25 and a student attends classes for 20 hours a week, the student's stipend would be $145 for the week during which the student attends classes ($7.25 × 20 = $145.00).

Note: In accordance with applicable Department statutory requirements and administrative regulations, grantees must maintain records that fully support their

decisions to award stipends and the amounts that are paid, such as proof of a student's enrollment in a NACTEP project, stipend applications, timesheets showing the number of attendance hours confirmed in writing by an instructor, student financial status information, and evidence that a student would not be able to participate in the NACTEP project without a stipend. (20 U.S.C. 1232f; 34 CFR 75.700–75.702; 75.730; and 75.731).

(5) An eligible student may receive a stipend when taking a course for the first time. However, generally a stipend may not be provided to a student who has already taken, completed, and had the opportunity to benefit from a course and is merely repeating the course.

(6) An applicant must include in its application the procedure it intends to use to determine student eligibility for stipends and stipend amounts, and its oversight procedures for the awarding and payment of stipends.

(c) *Direct assistance to students.* We propose that a grantee may provide direct assistance to students (as defined in this notice) if the following conditions are met:

(1) The recipient of the direct assistance is an individual who is a member of a special population and who is participating in the grantee's NACTEP project.

(2) The direct assistance is needed to address barriers to the individual's successful participation in that project.

(3) The direct assistance is part of a broader, more generally focused program or activity to address the needs of an individual who is a member of a special population.

Note: Direct assistance to individuals who are members of special populations is not, by itself, a ''program or activity for special populations.''

(4) The grant funds used for direct assistance must be expended to supplement, and not supplant, assistance that is otherwise available from non-Federal sources. (20 U.S.C. 2391(a)) For example, generally, a postsecondary educational institution could not use NACTEP funds to provide child care for single parents if non-Federal funds previously were made available for this purpose, or if non-Federal funds are used to provide child care services for single parents participating in non-career and technical education programs and these services otherwise would have been available to career and technical education students in the absence of NACTEP funds.

(5) In determining how much of the NACTEP grant funds it will use for direct assistance to an eligible student, a grantee must consider whether the specific services to be provided are a reasonable and necessary cost of providing career and technical education programs for special populations. However, the Secretary does not envision a circumstance in which it would be a reasonable and necessary expenditure of NACTEP project funds for a grantee to use a majority of a project's budget to pay direct assistance to students, in lieu of providing the students served by the project with career and technical education.

III. Additional Proposed Program Requirements

(a) *Career and technical education agreement.* Any applicant that is not proposing to provide career and technical education directly to its students and proposes instead to use NACTEP funds to pay one or more qualified educational entities to provide education to its students must include with its application a written career and technical education agreement between the applicant and that entity. The written agreement must describe the commitment between the applicant and each educational entity and must include, at a minimum, a statement of the responsibilities of the applicant and the entity. The agreement must be signed by the appropriate individuals on behalf of each party, such as the authorizing official or president of a tribe or tribal organization, a college president, or a college dean.

(b) *Evaluation Requirements.* To help ensure the high quality of NACTEP projects and the achievement of the goals and purposes of section 116 of the Act, each grantee must budget for and conduct an ongoing evaluation of the effectiveness of its NACTEP project. An independent evaluator must conduct the evaluation. The evaluation must—

(1) Be appropriate for the project and be both formative and summative in nature;

(2) Include—

(i) Applicable performance measures for NACTEP;

(ii) Qualitative and quantitative data with respect to—

(A) Academic and career and technical competencies demonstrated by the participants and the number and kinds of academic and work credentials acquired by individuals, including participation in programs providing skill proficiency assessments, industry certifications, or training at the associate degree level that is articulated with an advanced degree option;

(B) Enrollment, completion, and placement of participants by gender for each occupation for which training was provided;

(C) Job or work skill attainment or enhancement, including participation in apprenticeship and work-based learning programs, and student progress in achieving technical skill proficiencies necessary to obtain employment in the field for which the student has been prepared, including attainment or enhancement of technical skills in the industry the student is preparing to enter;

(D) Activities during the formative stages of the project to help guide and improve the project, as well as a summative evaluation that includes recommendations for disseminating information on project activities and results;

(E) The number and percentage of students who obtained industry-recognized credentials, certificates, or degrees;

(F) If available, the outcomes of students' technical assessments, by type and scores; and

(G) The rates of attainment of a proficiency credential or certificate, in conjunction with a secondary school diploma.

(c) *Project Effectiveness.* Measure the effectiveness of the project, including:

(1) A comparison between the intended and observed results; and

(2) A demonstration of a clear link between the observed results and the specific treatment given to project participants.

(d) *Dissemination.* Measure the extent to which information about or resulting from the project was disseminated at other sites, such as through the grantee's development and use of guides or manuals that provide step-by-step directions for practitioners to follow when initiating similar efforts.

(e) *Long-Term Impact.* Measure the long-term impact of the project, such as, follow-up data on students' employment, sustained employment, promotions, and further/continuing education or training, or the impact the project had on tribal economic development or career and technical education activities offered by tribes.

Proposed Definitions

We are proposing the following definitions for program terms not defined in the Act, by cross-references in the Act to other Federal statutes, or in EDGAR:

Acute economic need means an income that is at or below the national poverty level according to the latest available data from the U.S. Department of Commerce or the U.S. Department of

Health and Human Services Poverty Guidelines.

Direct assistance to students means tuition, dependent care, transportation, books, and supplies that are necessary for a student to participate in a project funded under this program.

Stipend means a subsistence allowance for a student that is necessary for the student to participate in a project funded under this program.

Proposed Selection Criteria

The Assistant Secretary proposes the following selection criteria for evaluating an application under this program. We may apply one or more of these criteria in any year in which this program is in effect. We will announce the maximum possible points assigned to each criterion in the notice inviting applications, in the application package, or both.

(a) *Need for project.* In determining the need for the proposed project, we consider the extent of the need for the services to be provided or the activities to be carried out by the proposed project, as evidenced by data on such phenomena as local labor market demand or occupational trends, or from surveys, recommendations from accrediting agencies, or tribal economic development plans.

(b) *Significance.* In determining the significance of the proposed project, we consider the following factors:

(1) The potential contribution of the proposed project toward increasing the understanding of educational needs, issues, or strategies for providing career and technical education to American Indians and Alaska Natives.

(2) The likelihood that the proposed project will result in system change or improvement in the applicant's educational program as evidenced by the types of training and activities identified in the project application.

(3) The extent to which the proposed project is likely to build local capacity to provide, improve, or expand services that address the career and technical needs of the target population.

(c) *Quality of the project design.* In determining the quality of the design of the proposed project, we consider the following factors:

(1) The extent to which goals, objectives, and outcomes are clearly specified and measurable (e.g., identification of the requirements for each course of study to be provided under the project, the technical skill proficiencies to be taught and the industry-recognized standards or competency assessments to be used, including related training areas and a description of the industry certifications, credentials, certificates, or degrees that students may earn; expected enrollments, completions, and student placements in jobs, military specialties, and continuing education/training opportunities in each career training area; the number of teachers, counselors, and administrators to be trained).

(2) The extent to which the design of the proposed project is appropriate to, and will successfully address, the needs of the target population or other identified needs, as evidenced by the applicant's description of programs and activities that align with the target population's needs.

(3) The extent to which the design for implementing and evaluating the proposed project plans for and is likely to result in the development of information that will guide possible dissemination of information on project practices, activities, or strategies, including information about the effectiveness of the approach or strategies employed by the project, planned dissemination activities, the kind of practices, activities, or strategies to be disseminated, the target audience for the dissemination of such practices, activities, or strategies, and the proposed uses for such disseminated practices, activities, or strategies.

(4) The extent to which the proposed project will establish linkages with or will be coordinated with similar or related efforts, and with community, State, or Federal resources, where such opportunities and resources exist.

(d) *Quality of project services.* In determining the quality of the services to be provided by the proposed project, we consider the following factors:

(1) The extent to which the training or professional development services to be provided by the proposed project would be of sufficient quality, intensity, and duration to lead to improvements in practice among the project staff and instructors, including the extent to which the proposed training and professional development plans address ways in which learning gaps will be addressed and how continuous review of performance will be conducted to identify training needs.

(2) The extent to which the services to be provided by the proposed project will create opportunities for students to receive an industry-recognized credential; become employed in high-skill, high-wage, and high-demand occupations; or both.

(3) The extent to which the services proposed in the project will create opportunities for students to acquire technical skill proficiencies, industry certifications, or the skills identified by State or industry-recognized career and technical education programs or professions. In describing the services, there must be a clear link between the services and the skill proficiencies, industry certifications, credentials, certificates, or degrees that students may earn.

(e) *Quality of project personnel.* In determining the quality of project personnel, we consider the following factors:

(1) The extent to which the applicant encourages applications for employment from persons who are members of groups that have traditionally been underrepresented based on color, national origin, gender, age, or disability.

(2) The qualifications, including relevant training, expertise, and experience, of the project director, key personnel, and project consultants.

(3) The extent to which the project will use instructors who are certified to teach in the field in which they will provide instruction.

(f) *Adequacy of resources.* In determining the adequacy of resources for the proposed project, we consider the following factors:

(1) The adequacy of support, including facilities, equipment, supplies, and other resources, from the applicant organization(s) and the tribal entity or entities to be served.

(2) The extent to which the budget is adequate and costs are reasonable in relation to the objectives of the proposed project.

(3) The relevance and demonstrated commitment (e.g., through written career and technical education agreements, memoranda of understanding, letters of support and commitment, or commitments to employ project participants, as appropriate) of the applicant, members of the consortium, local employers, or tribal entities to be served by the project.

(4) The potential for continued support of the project after Federal funding ends.

(g) *Quality of the management plan.* In determining the quality of the management plan for the proposed project, we consider the following factors:

(1) The adequacy of the management plan to achieve the objectives of the proposed project on time and within budget, including clearly defined responsibilities, timelines, and the milestones and performance standards for accomplishing project tasks.

(2) The extent to which the time commitments of the project director and other key project personnel are

appropriate and adequate to meet the objectives of the proposed project.

(3) The adequacy of mechanisms for ensuring high-quality products and services from the proposed project.

(h) *Quality of the project evaluation.* In determining the quality of the evaluation, we consider the following factors:

(1) The extent to which the methods of evaluation proposed by the grantee are thorough, feasible, and appropriate to the goals, objectives, and outcomes of the proposed project.

(2) The extent to which the methods of evaluation include the use of objective performance measures that are clearly related to the intended outcomes of the project and the Government Performance and Results Act of 1993 (GPRA) performance measures, and will produce quantitative and qualitative data, to the extent possible.

(3) The extent to which the methods of the evaluation include processes that consider the validity and integrity of data collection and analysis; accessibility of appropriate and timely data; accurate descriptions of performance; collection processes that yield unbiased, unprejudiced, and impartial data results; and the extent to which representation of the data clearly communicates an accurate picture of performance.

(4) The extent to which the methods of evaluation will provide performance feedback and continuous improvement toward achieving intended outcomes.

(5) The quality of the evaluation to be conducted by an external evaluator with the necessary background and technical expertise to carry out the evaluation.

Additional Selection Factors

In accordance with the requirement in section 116(e) of the Act, we have included the following additional selection factors and propose to award additional points to any application addressing the following factors, as indicated. We are not soliciting public comment on the section 116(e) requirement but only on the way we are proposing to meet the requirement.

We propose to award—

(a) Up to 10 additional points to applications that propose exemplary approaches that involve, coordinate with, or encourage tribal economic development plans; and

(b) Five points to applications from tribally controlled colleges or universities that—

(1) Are accredited or are candidates for accreditation by a nationally recognized accreditation organization as an institution of postsecondary career and technical education; or

(2) Operate career and technical education programs that are accredited or are candidates for accreditation by a nationally recognized accreditation organization and issue certificates for completion of career and technical education programs (20 U.S.C. 2326(e)).

We will determine final requirements, definitions, and selection criteria for NACTEP after considering responses to this notice and other information available to the Department. We will announce final requirements, definitions, and selection criteria for NACTEP in a notice in the **Federal Register.** This notice does not preclude us from proposing additional priorities, requirements, definitions, or selection criteria, subject to meeting applicable rulemaking requirements.

This notice does *not* solicit applications. In any year in which we choose to use this proposed priority and one or more of these proposed requirements, definitions, and selection criteria, we invite applications through a notice in the **Federal Register.**

Executive Orders 12866 and 13563

Regulatory Impact Analysis

Under Executive Order 12866, the Secretary must determine whether this regulatory action is ''significant'' and, therefore, subject to the requirements of the Executive order and subject to review by the Office of Management and Budget (OMB). Section 3(f) of Executive Order 12866 defines a ''significant regulatory action'' as an action likely to result in a rule that may—

(1) Have an annual effect on the economy of $100 million or more, or adversely affect a sector of the economy, productivity, competition, jobs, the environment, public health or safety, or State, local or tribal governments or communities in a material way (also referred to as an ''economically significant'' rule);

(2) Create serious inconsistency or otherwise interfere with an action taken or planned by another agency;

(3) Materially alter the budgetary impacts of entitlement grants, user fees, or loan programs or the rights and obligations of recipients thereof; or

(4) Raise novel legal or policy issues arising out of legal mandates, the President's priorities, or the principles stated in the Executive order.

This proposed regulatory action is not a significant regulatory action subject to review by OMB under section 3(f) of Executive Order 12866.

We have also reviewed this proposed regulatory action under Executive Order 13563, which supplements and explicitly reaffirms the principles, structures, and definitions governing regulatory review established in Executive Order 12866. To the extent permitted by law, Executive Order 13563 requires that an agency—

(1) Propose or adopt regulations only upon a reasoned determination that their benefits justify their costs (recognizing that some benefits and costs are difficult to quantify);

(2) Tailor its regulations to impose the least burden on society, consistent with obtaining regulatory objectives and taking into account—among other things and to the extent practicable—the costs of cumulative regulations;

(3) In choosing among alternative regulatory approaches, select those approaches that maximize net benefits (including potential economic, environmental, public health and safety, and other advantages; distributive impacts; and equity);

(4) To the extent feasible, specify performance objectives, rather than the behavior or manner of compliance a regulated entity must adopt; and

(5) Identify and assess available alternatives to direct regulation, including economic incentives—such as user fees or marketable permits—to encourage the desired behavior, or provide information that enables the public to make choices.

Executive Order 13563 also requires an agency ''to use the best available techniques to quantify anticipated present and future benefits and costs as accurately as possible.'' The Office of Information and Regulatory Affairs of OMB has emphasized that these techniques may include ''identifying changing future compliance costs that might result from technological innovation or anticipated behavioral changes.''

We are issuing these proposed requirements, definitions, and selection criteria based on a reasoned determination that their benefits would justify their costs. In choosing among alternative regulatory approaches, we selected those approaches that would maximize net benefits. Based on the analysis that follows, the Department believes that this regulatory action is consistent with the principles in Executive Order 13563.

We also have determined that this regulatory action would not unduly interfere with tribal governments in the exercise of their governmental functions.

In accordance with both Executive orders, the Department has assessed the potential costs and benefits, both quantitative and qualitative, of this regulatory action. The potential costs are those resulting from statutory

requirements and those we have determined as necessary for administering the Department's programs and activities.

Intergovernmental Review: This program is not subject to Executive Order 12372 and the regulations in 34 CFR part 79. One of the objectives of the Executive order is to foster an intergovernmental partnership and a strengthened federalism. The Executive order relies on processes developed by State and local governments for coordination and review of proposed Federal financial assistance.

This document provides early notification of our specific plans and actions for this program.

Accessible Format: Individuals with disabilities can obtain this document in an accessible format (e.g., braille, large print, audiotape, or compact disc) on request to the contact person listed under **FOR FURTHER INFORMATION CONTACT**.

Electronic Access to This Document: The official version of this document is the document published in the **Federal Register.** Free Internet access to the official edition of the **Federal Register** and the Code of Federal Regulations is available via the Federal Digital System at: *www.gpo.gov/fdsys.* At this site you can view this document, as well as all other documents of this Department published in the **Federal Register,** in text or Adobe Portable Document Format (PDF). To use PDF you must have Adobe Acrobat Reader, which is available free at the site.

You may also access documents of the Department published in the **Federal Register** by using the article search feature at: *www.federalregister.gov.* Specifically, through the advanced search feature at this site, you can limit your search to documents published by the Department.

Dated: November 15, 2012.

Daniel J. Miller,

Executive Officer, Delegated Authority to Perform the Functions and Duties of the Assistant Secretary for Vocational and Adult Education.

[FR Doc. 2012–28216 Filed 11–19–12; 8:45 am]

BILLING CODE 4000–01–P

ENVIRONMENTAL PROTECTION AGENCY

40 CFR Part 98

[EPA–HQ–OAR–2011–0028; FRL–9753–2]

Greenhouse Gas Reporting Program: Proposed Amendments and Confidentiality Determinations for Subpart I

AGENCY: Environmental Protection Agency (EPA).

ACTION: Notice; Extension of public comment period.

SUMMARY: The EPA is announcing an extension of the public comment period for the proposed rule titled ''Greenhouse Gas Reporting Program: Proposed Amendments and Confidentiality Determinations for Subpart I.'' In addition, the EPA is notifying the public that additional documentation related to this proposed rule was entered into the docket on November 8, 2012.

DATES: The public comment period started on October 16, 2012 (77 FR 63538). This document announces the extension of the deadline for public comment from December 17, 2012 to January 16, 2013. Comments must be received on or before January 16, 2013.

ADDRESSES: You may submit your comments, identified by Docket ID No. EPA–HQ–OAR–2011–0028 by any of the following methods:

- *Federal eRulemaking Portal: http://www.regulations.gov.* Follow the online instructions for submitting comments.
- *Email: GHGReportingRule@epa.gov.* Include Docket ID No. EPA–HQ–OAR–2011–0028 in the subject line of the message.
- *Fax:* (202) 566–9744.
- *Mail:* Environmental Protection Agency, EPA Docket Center (EPA/DC), Mail Code 28221T, Attention Docket ID No. EPA–HQ–OAR–2011–0028, 1200 Pennsylvania Avenue NW., Washington, DC 20460.
- *Hand/Courier Delivery:* EPA Docket Center, Public Reading Room, EPA West Building, Room 3334, Attention Docket ID No. EPA–HQ–OAR–2011–0028, 1301 Constitution Avenue NW., Washington, DC 20004. Such deliveries are only accepted during the docket's normal hours of operation, and special arrangements should be made for deliveries of boxed information.

Instructions: Direct your comments to Docket ID No. EPA–HQ–OAR–2011–0028. EPA's policy is that all comments received will be included in the public docket without change and may be made available online at *http://www.regulations.gov,* including any personal information provided, unless the comment includes information claimed to be confidential business information (CBI) or other information whose disclosure is restricted by statute. Do not submit information that you consider to be CBI or otherwise protected through *http://www.regulations.gov* or email. The *http://www.regulations.gov* Web site is an ''anonymous access'' system, which means the EPA will not know your identity or contact information unless you provide it in the body of your comment. If you send an email comment directly to the EPA without going through *http://www.regulations.gov* your email address will be automatically captured and included as part of the comment that is placed in the public docket and made available on the Internet. If you submit an electronic comment, the EPA recommends that you include your name and other contact information in the body of your comment and with any disk or CD–ROM you submit. If the EPA cannot read your comment due to technical difficulties and cannot contact you for clarification, the EPA may not be able to consider your comment. Electronic files should avoid the use of special characters, any form of encryption, and be free of any defects or viruses.

Docket: All documents in the docket are listed in the *http://www.regulations.gov* index. Although listed in the index, some information is not publicly available, e.g., CBI or other information whose disclosure is restricted by statute. Certain other material, such as copyrighted material, will be publicly available for viewing at the EPA Docket Center. Publicly available docket materials are available either electronically in *http://www.regulations.gov* or in hard copy at the EPA Docket Center, EPA/DC, EPA West Building, Room 3334, 1301 Constitution Ave. NW., Washington, DC. This Docket Facility is open from 8:30 a.m. to 4:30 p.m., Monday through Friday, excluding legal holidays. The telephone number for the Public Reading Room is (202) 566–1744, and the telephone number for the Air Docket is (202) 566–1742.

FOR FURTHER INFORMATION CONTACT: Carole Cook, Climate Change Division, Office of Atmospheric Programs (MC–6207J), Environmental Protection Agency, 1200 Pennsylvania Ave. NW., Washington, DC 20460; telephone number: (202) 343–9263; fax number: (202) 343–2342; email address: *GHGReportingRule@epa.gov.* For technical questions, please see the

Greenhouse Gas Reporting Program Web site *http://www.epa.gov/ghgreporting/index.html.* To submit a question, select *Help Center,* followed by *Contact Us.*

SUPPLEMENTARY INFORMATION:

Worldwide Web (WWW)

In addition to being available in the docket, an electronic copy of today's notice will also be available through the WWW. Following signature, a copy of this action will be posted on the EPA's greenhouse gas reporting rule Web site at *http://www.epa.gov/ghgreporting/index.html.*

Additional Information on Submitting Comments

To expedite review of your comments by Agency staff, you are encouraged to send a separate copy of your comments, in addition to the copy you submit to the official docket, to Carole Cook, U.S. EPA, Office of Atmospheric Programs, Climate Change Division, Mail Code 6207–J, Washington, DC 20460, telephone (202) 343–9263, email address: *GHGReportingRule@epa.gov.*

Background on Today's Action

In this action, the EPA is providing notice that it is extending the comment period on the proposed rule titled ''Greenhouse Gas Reporting Program: Proposed Amendments and Confidentiality Determinations for Subpart I'' which was published on October 16, 2012. The previous deadline for submitting public comment on that rule was December 17, 2012. The EPA is extending that deadline to January 16, 2013. This extension will provide the general public additional time for participation and comments.

In addition, the EPA is notifying the public that additional documentation related to this proposed rule was entered into the docket on November 8, 2012 and is available for public review. This documentation summarizes a call between the Semiconductor Industry Association and the EPA held on October 24, 2012 and provides additional information in response to questions raised on that call, including additional information regarding the calculation of the ''Tier 2a'' emission factors that appear in Tables I–11 and I–12 of the proposed rule and regarding the identification of an error in those calculations. The two new documents added to the docket to provide this information are ''EPA SIA Call Summary from October 24 2012'' and ''Tier 2a NF3 and C2F6 Emission Factor Calculations''. The EPA encourages the public to review these documents when considering comments on this proposed rule.

List of Subjects in 40 CFR Part 98

Environmental protection, Administrative practice and procedure, Greenhouse gases, Reporting and recordkeeping requirements.

Dated: November 13, 2012.

Sarah Dunham,

Director, Office of Atmospheric Programs.

[FR Doc. 2012–28220 Filed 11–19–12; 8:45 am]

BILLING CODE 6560–50–P

FEDERAL COMMUNICATIONS COMMISSION

47 CFR Part 101

[WT Docket No. 10–153; Report 2964]

Petition for Reconsideration of Action in Rulemaking Proceeding

AGENCY: Federal Communication Commission.

ACTION: Petition for reconsideration.

SUMMARY: In this document, a Petition for Reconsideration (Petition) has been filed in the Commission's rulemaking proceeding by Michael Mulcay, Chairman of Wireless Strategies, Inc., on the behalf of Wireless Strategies.

DATES: Oppositions to the Petition must be file on or before December 5, 2012. Replies to an opposition must be filed on or before December 17, 2012.

ADDRESSES: Submit oppositions to the Petition or replies to an opposition to Federal Communications Commission, 445 12th Street SW., Washington, DC 20554.

FOR FURTHER INFORMATION CONTACT: John Schauble, Wireless Telecommunications Bureau, 202–418–0797.

SUPPLEMENTARY INFORMATION: This is a summary of Commission's document, Report No. 2964, released October 22, 2012. The full text of this document is available for viewing and copying in Room CY–B402, 445 12th Street SW., Washington, DC or may be purchased from the Commission's copy contractor, Best Copy and Printing, Inc. (BCPI) (1–800–378–3160). The Commission will not send a copy of this Notice pursuant to the Congressional Review Act, 5 U.S.C. 801(a)(1)(A), because this Notice does not have an impact on any rules of particular applicability.

Subject: Amendment of Part 101 of the Commission's Rules to Facilitate the Use of Microwave for Wireless Backhaul and Other Uses and to Provide Additional Flexibility to Broadcast Auxiliary Services and Operational Fixed Microwave Licenses, Petition for Reconsideration of Wireless Strategies, Inc., published at 77 FR 54421, September 5, 2012, and at 77 FR 54511, September 5, 2012, and published pursuant to 47 CFR 1.429(e) of the Commission's rules. *See also* 47 CFR 1.4(b)(1) of the Commission's rules.

Number of Petitions Filed: 1.

Federal Communications Commission.

Gloria J. Miles,

Federal Register Liaison, Office of the Secretary, Office of Managing Director.

[FR Doc. 2012–28110 Filed 11–19–12; 8:45 am]

BILLING CODE 6712–01–P

DEPARTMENT OF TRANSPORTATION

National Highway Traffic Safety Administration

49 CFR Part 571

[Docket No. NHTSA–2012–0155]

Federal Motor Vehicle Safety Standards; Small Business Impacts of Motor Vehicle Safety

AGENCY: National Highway Traffic Safety Administration (NHTSA), Department of Transportation (DOT).

ACTION: Notice of regulatory review; request for comments.

SUMMARY: NHTSA seeks comments on the economic impact of its regulations on small entities. As required by Section 610 of the Regulatory Flexibility Act, we are attempting to identify rules that may have a significant economic impact on a substantial number of small entities. We also request comments on ways to make these regulations easier to read and understand. The focus of this notice is rules that specifically relate to passenger cars, multipurpose passenger vehicles, trucks, buses, trailers, motorcycles, and motor vehicle equipment.

DATES: You should submit comments early enough to ensure that Docket Management receives them not later than January 22, 2013.

ADDRESSES: You may submit comments [identified by DOT Docket ID Number NHTSA–2012–0155] by any of the following methods:

- *Federal eRulemaking Portal:* Go to *http://www.regulations.gov.* Follow the online instructions for submitting comments.
- *Mail:* Docket Management Facility: U.S. Department of Transportation, 1200 New Jersey Avenue SE., West Building Ground Floor, Room W12–140, Washington, DC 20590–0001.
- *Hand Delivery or Courier:* West Building Ground Floor, Room W12–140, 1200 New Jersey Avenue SE., between

9 a.m. and 5 p.m. ET, Monday through Friday, except Federal holidays.

• *Fax:* 202–493–2251.

Instructions: For detailed instructions on submitting comments and additional information see the Comments heading of the Supplementary Information section of this document. Note that all comments received will be posted without change to *http://www.regulations.gov,* including any personal information provided. Please see the Privacy Act heading below.

Privacy Act: Anyone is able to search the electronic form of all comments received into any of our dockets by the name of the individual submitting the comment (or signing the comment, if submitted on behalf of an association, business, labor union, etc.). You may review DOT's complete Privacy Act Statement in the **Federal Register** published on April 11, 2000 (65 FR 19477–78) or you may visit *http://DocketsInfo.dot.gov.*

FOR FURTHER INFORMATION CONTACT:

Juanita Kavalauskas, Office of Regulatory Analysis, Office of Regulatory Analysis and Evaluation, National Highway Traffic Safety Administration, U.S. Department of Transportation, 1200 New Jersey Avenue SE., Washington, DC 20590 (telephone 202–366–2584, fax 202–366–3189).

SUPPLEMENTARY INFORMATION:

I. Section 610 of the Regulatory Flexibility Act

A. Background and Purpose

Section 610 of the Regulatory Flexibility Act of 1980 (Pub. L. 96–354), as amended by the Small Business Regulatory Enforcement Fairness Act of 1996 (Pub. L. 104–121), requires agencies to conduct periodic reviews of final rules that have a significant economic impact on a substantial number of small business entities. The purpose of the reviews is to determine whether such rules should be continued without change, or should be amended or rescinded, consistent with the objectives of applicable statutes, to minimize any significant economic impact of the rules on a substantial number of such small entities.

B. Review Schedule

The Department of Transportation (DOT) published its Semiannual Regulatory Agenda on November 22, 1999, listing in Appendix D (64 FR 64684) those regulations that each operating administration will review under section 610 during the next 12 months. Appendix D contained DOT's 10-year review plan for all of its existing regulations. On November 24, 2008, NHTSA published in the **Federal Register** (73 FR 71401) a revised 10-year review plan for its existing regulations.

The National Highway Traffic Safety Administration (NHTSA, ''we'') has divided its rules into 10 groups by subject area. Each group will be reviewed once every 10 years, undergoing a two-stage process—an Analysis Year and a Review Year. For purposes of these reviews, a year will coincide with the fall-to-fall publication schedule of the Semiannual Regulatory Agenda. The newly revised 10-year plan will assess years 9 and 10 of the old plan in years 1 and 2 of the new plan. Year 1 (2008) began in the fall of 2008 and will end in the fall of 2009; Year 2 (2009) will begin in the fall of 2009 and will end in the fall of 2010; and so on.

During the Analysis Year, we will request public comment on and analyze each of the rules in a given year's group to determine whether any rule has a significant impact on a substantial number of small entities and, thus, requires review in accordance with section 610 of the Regulatory Flexibility Act. In each fall's Regulatory Agenda, we will publish the results of the analyses we completed during the previous year. For rules that have subparts, or other discrete sections of rules that do have a significant impact on a substantial number of small entities, we will announce that we will be conducting a formal section 610 review during the following 12 months.

The section 610 review will determine whether a specific rule should be revised or revoked to lessen its impact on small entities. We will consider: (1) The continued need for the rule; (2) the nature of complaints or comments received from the public; (3) the complexity of the rule; (4) the extent to which the rule overlaps, duplicates, or conflicts with other federal rules or with state or local government rules; and (5) the length of time since the rule has been evaluated or the degree to which technology, economic conditions, or other factors have changed in the area affected by the rule. At the end of the Review Year, we will publish the results of our review. The following table shows the 10-year analysis and review schedule:

NATIONAL HIGHWAY TRAFFIC SAFETY ADMINISTRATION SECTION 610 REVIEWS

Year	Regulations to be reviewed	Analysis year	Review year
1	49 CFR 571.223 through 571.500, and parts 575 and 579	2008	2009
2	23 CFR parts 1200 and 1300	2009	2010
3	49 CFR parts 501 through 526 and 571.213	2010	2011
4	49 CFR 571.131, 571.217, 571.220, 571.221, and 571.222	2011	2012
5	49 CFR 571.101 through 571.110, and 571.135, 571.138 and 571.139	2012	2013
6	49 CFR parts 529 through 578, except parts 571 and 575	2013	2014
7	49 CFR 571.111 through 571.129 and parts 580 through 588	2014	2015
8	49 CFR 571.201 through 571.212	2015	2016
9	49 CFR 571.214 through 571.219, except 571.217	2016	2017
10	49 CFR parts 591 through 595 and new parts and subparts	2017	2018

C. Regulations Under Analysis

During Year 5, we will continue to conduct a preliminary assessment of the following: 49 CFR 571.101 through 571.110, and 571.135, 571.138 and 571.139.

Section	Title
571.101	Controls and displays.
571.102	Transmission shift position sequence, starter interlock, and transmission braking effect.
571.103	Windshield defrosting and defogging systems.
571.104	Windshield wiping and washing systems.

Section	Title
571.105	Hydraulic and electric brake systems.
571.106	Brake hoses.
571.107	[Reserved]
571.108	Lamps, reflective devices, and associated equipment.
571.109	New pneumatic and certain specialty tires.
571.110	Tire selection and rims and motor home/recreation vehicle trailer load carrying capacity information for motor vehicles with a GVWR of 4,536 kilograms (10,000 pounds) or less.
571.135	Light vehicle brake systems.
571.138	Tire pressure monitoring systems.
571.139	New pneumatic radial tires for light vehicles.

We are seeking comments on whether any requirements in 49 CFR 571.101 through 571.110, and 571.135, 571.138 and 571.139 have a significant economic impact on a substantial number of small entities. ''Small entities'' include small businesses, not-for-profit organizations that are independently owned and operated and are not dominant in their fields, and governmental jurisdictions with populations under 50,000. Business entities are generally defined as small businesses by Standard Industrial Classification (SIC) code, for the purposes of receiving Small Business Administration (SBA) assistance. Size standards established by SBA in 13 CFR 121.201 are expressed either in number of employees or annual receipts in millions of dollars, unless otherwise specified. The number of employees or annual receipts indicates the maximum allowed for a concern and its affiliates to be considered small. If your business or organization is a small entity and if any of the requirements in 49 CFR 571.101 through 571.110, and 571.135, 571.138 and 571.139 have a significant economic impact on your business or organization, please submit a comment to explain how and to what degree these rules affect you, the extent of the economic impact on your business or organization, and why you believe the economic impact is significant.

If the agency determines that there is a significant economic impact on a substantial number of small entities, it will ask for comment in a subsequent notice during the Review Year on how these impacts could be reduced without reducing safety.

II. Plain Language

A. Background and Purpose

Executive Order 12866 and the President's memorandum of June 1, 1998, require each agency to write all rules in plain language. Application of the principles of plain language includes consideration of the following questions:

- Have we organized the material to suit the public's needs?
- Are the requirements in the rule clearly stated?
- Does the rule contain technical language or jargon that is not clear?
- Would a different format (grouping and order of sections, use of headings, paragraphing) make the rule easier to understand?
- Would more (but shorter) sections be better?
- Could we improve clarity by adding tables, lists, or diagrams?
- What else could we do to make the rule easier to understand?

If you have any responses to these questions, please include them in your comments on this document.

B. Review Schedule

In conjunction with our section 610 reviews, we will be performing plain language reviews over a ten-year period on a schedule consistent with the section 610 review schedule. We will review 49 CFR 571.101 through 571.110, and 571.135, 571.138 and 571.139 to determine if these regulations can be reorganized and/or rewritten to make them easier to read, understand, and use. We encourage interested persons to submit draft regulatory language that clearly and simply communicates regulatory requirements, and other recommendations, such as for putting information in tables that may make the regulations easier to use.

Comments

How do I prepare and submit comments?

Your comments must be written and in English. To ensure that your comments are correctly filed in the Docket, please include the docket number of this document in your comments.

Your comments must not be more than 15 pages long. (49 CFR 553.21.) We established this limit to encourage you to write your primary comments in a concise fashion. However, you may attach necessary additional documents to your comments. There is no limit on the length of the attachments.

Please submit two copies of your comments, including the attachments, to Docket Management at the address given above under **ADDRESSES**.

Please note that pursuant to the Data Quality Act, in order for substantive data to be relied upon and used by the agency, it must meet the information quality standards set forth in the OMB and DOT Data Quality Act guidelines. Accordingly, we encourage you to consult the guidelines in preparing your comments. OMB's guidelines may be accessed at *http://www.whitehouse.gov/omb/fedreg/reproducible.html.* DOT's guidelines may be accessed at *http://dmses.dot.gov/submit/DataQualityGuidelines.pdf.*

How can I be sure that my comments were received?

If you wish Docket Management to notify you upon its receipt of your comments, enclose a self-addressed, stamped postcard in the envelope containing your comments. Upon receiving your comments, Docket Management will return the postcard by mail.

How do I submit confidential business information?

If you wish to submit any information under a claim of confidentiality, you should submit three copies of your complete submission, including the information you claim to be confidential business information, to the Chief Counsel, NHTSA, U.S. Department of Transportation, 1200 New Jersey Avenue SE., Washington, DC 20590. In addition, you should submit two copies, from which you have deleted the claimed confidential business information, to Docket Management at the address given above under **ADDRESSES**. When you send a comment containing information claimed to be confidential business information, you should include a cover letter setting forth the information specified in our confidential business information regulation. (49 CFR part 512.)

Will the agency consider late comments?

We will consider all comments that Docket Management receives before the close of business on the comment closing date indicated above under **DATES**. To the extent possible, we will also consider comments that Docket Management receives after that date.

How can I read the comments submitted by other people?

You may read the comments received by Docket Management at the address given above under **ADDRESSES**. The hours of the Docket are indicated above in the same location.

You may also see the comments on the Internet. To read the comments on the Internet, take the following steps:

(1) Go to the Federal Docket Management System (FDMS) at *http://regulations.gov.*

(2) FDMS provides two basic methods of searching to retrieve dockets and docket materials that are available in the system: (a) ''Quick Search'' to search using a full-text search engine, or (b) ''Advanced Search,'' which displays various indexed fields such as the docket name, docket identification number, phase of the action, initiating office, date of issuance, document title, document identification number, type of document, **Federal Register** reference, CFR citation, etc. Each data field in the advanced search may be searched independently or in combination with other fields, as desired. Each search yields a simultaneous display of all available information found in FDMS that is relevant to the requested subject or topic.

(3) You may download the comments. However, since the comments are imaged documents, instead of word processing documents, the ''pdf'' versions of the documents are word searchable.

Please note that even after the comment closing date, we will continue to file relevant information in the Docket as it becomes available. Further, some people may submit late comments. Accordingly, we recommend that you periodically check the Docket for new material.

Terry Shelton,

Associate Administrator for the National Center for Statistics and Analysis.

[FR Doc. 2012–28103 Filed 11–19–12; 8:45 am]

BILLING CODE 4910–59–P

Notices

Federal Register

Vol. 77, No. 224

Tuesday, November 20, 2012

This section of the FEDERAL REGISTER contains documents other than rules or proposed rules that are applicable to the public. Notices of hearings and investigations, committee meetings, agency decisions and rulings, delegations of authority, filing of petitions and applications and agency statements of organization and functions are examples of documents appearing in this section.

DEPARTMENT OF AGRICULTURE

Submission for OMB Review; Comment Request

November 14, 2012.

The Department of Agriculture has submitted the following information collection requirement(s) to OMB for review and clearance under the Paperwork Reduction Act of 1995, Public Law 104–13. Comments regarding (a) whether the collection of information is necessary for the proper performance of the functions of the agency, including whether the information will have practical utility; (b) the accuracy of the agency's estimate of burden including the validity of the methodology and assumptions used; (c) ways to enhance the quality, utility and clarity of the information to be collected; (d) ways to minimize the burden of the collection of information on those who are to respond, including through the use of appropriate automated, electronic, mechanical, or other technological collection techniques or other forms of information technology should be addressed to: Desk Officer for Agriculture, Office of Information and Regulatory Affairs, Office of Management and Budget (OMB), *OIRA_Submission@OMB.EOP.GOV* or fax (202) 395–5806 and to Departmental Clearance Office, USDA, OCIO, Mail Stop 7602, Washington, DC 20250–7602. Comments regarding these information collections are best assured of having their full effect if received within 30 days of this notification. Copies of the submission(s) may be obtained by calling (202) 720–8958.

An agency may not conduct or sponsor a collection of information unless the collection of information displays a currently valid OMB control number and the agency informs potential persons who are to respond to the collection of information that such persons are not required to respond to the collection of information unless it displays a currently valid OMB control number.

Food and Nutrition Service

Title: Study of Organizations Providing or Administering SNAP Incentives at Farmer's Market (Farmers Market Incentive Provider Study) (FMIPS).

OMB Control Number: 0584–NEW.

Summary of Collection: The USDA, Food and Nutrition Service (FNS), is undertaking initiatives to improve access to healthy foods among nutrition assistance program participants. FNS is taking steps to support access to fresh fruits and vegetables through farmers markets (FM) for individuals participating in programs such as the Supplemental Nutrition Assistance Program (SNAP). The authority for this collection is authorized under 17(a)(1) of the Food and Nutrition Act of 2008 (7 U.S.C. 2026).

Need and Use of the Information: The overall objective of this collection is to understand how private organizations provide and administer financial incentives for SNAP participants shopping at farmers markets. In addition, the collection aims to assess how well these incentives programs work concerning the purchase of fresh fruits and vegetables at farmers' markets by SNAP participants. If the data is not collected, USDA/FNS will be unable to improve its understanding of how SNAP incentives impact the sale of healthier foods to SNAP clients in the farmers' market setting.

Description of Respondents: Business or other for-profit.

Number of Respondents: 315.

Frequency of Responses: Reporting: On occasion.

Total Burden Hours: 342.

Title: Understanding the Rates, Causes, and Costs of Churning in the Supplemental Nutrition Assistance Program (SNAP).

OMB Control Number: 0584–NEW.

Summary of Collection: Section 17 [7 U.S.C. 2026] of the Food and Nutrition Act of 2008 provides general legislative authority for the planned data collection. This section authorizes the Secretary of Agriculture to enter into contracts with private institutions to undertake research that will help to improve the administration and effectiveness of the Supplemental Nutrition Assistance Program (SNAP) in delivering nutrition-related benefits. SNAP is the U.S. Department of Agriculture's largest nutrition program, enabling millions of low-income Americans to purchase groceries. The program is designed to respond to broad economic and individual circumstances as they change over time. There are also times, however, when households leave the program despite remaining eligible. Eligible households not receiving SNAP benefits are of concern to the program because of their reduced access to nutritious foods. The Office of Research and Analysis in USDA's Food and Nutrition Service has undertaken a study on the causes and costs of churning in SNAP. Churning occurs when a SNAP participant leaves the program and returns within a short period of time, defined here as four months or less.

Need and Use of the Information: Information will be collected from the study to better understand (1) the rates and patterns of churning; (2) why participants churn; (3) what happens administratively when a participant returns to SNAP after a brief spell of non-receipt, and (4) the costs of churn to both programs and participants. If the study information is not collected, those responsible at the federal, state, and local levels for designing and implementing SNAP policies and procedures will not have the value of this research in making their decisions on matters affecting participant churn.

Description of Respondents: Individuals or households; Not-for-profit institutions; State, Local, or Tribal Government .

Number of Respondents: 201.

Frequency of Responses: Reporting: Annually.

Total Burden Hours: 850.

Title: Study of the effectiveness of Efforts to Improve Supplemental Nutrition Assistance Program (SNAP) Access Among Medicare's Extra Help Population Pilot Projects.

OMB Control Number: 0584–NEW.

Summary of Collection: The Agriculture, Rural Development, Food and Drug Administration, and Related Agencies Appropriations Act, 2010 (Pub. L. 111–80) provides the Food and Nutrition Service (FNS) with funds to test the effectiveness of pilot projects designed to increase elderly participation in the Supplemental

Nutrition Assistance Program (SNAP). Historically, elderly individuals who are eligible for SNAP have the lowest participation rate among all demographic groups. The pilot projects will attempt to increase participation in SNAP among beneficiaries of Medicare's Extra Help by using data from Extra Help applications that are forwarded to State Medicaid offices. Because Extra Help and SNAP eligibility requirements do not directly correspond, these pilot projects will evaluate methods of using these Medicaid data to improve access to SNAP among Extra Help beneficiaries.

Need and Use of the Information: FNS will collect information to understand how the pilot projects operated, who they served, and the extent to which they generated any measureable effects on participation cost, and SNAP benefits. The study will provide federal and state policymakers, as well as program administrators at these levels, with information on whether and to what extent the pilot projects have reduced the barriers to SNAP participants experienced by Extra Help applicants.

Description of Respondents: Individuals or household.

Number of Respondents: 6,138.

Frequency of Responses: Reporting: On occasion; Annually.

Total Burden Hours: 1,940.

Title: National School Lunch Program.

OMB Control Number: 0584–0006.

Summary of Collection: The Richard B. Russell National School Lunch Act (NSLA) in Section 9(a)(4), 42 U.S.C. 1758(a)(4), requires that school meals reflect the latest ''Dietary Guidelines for Americans'' (Dietary Guidelines). In addition, section 201 of the Healthy, Hunger Free Kids Act of 2010 (HHFKA), Public Law 111–296 amends Section 4(b) of the NSLA, 42 U.S.C. 1753(b) to require the Department of Agriculture to issue regulations to update the meal patterns and nutrition standards for school lunches and breakfasts based on the recommendations issued by the Food and Nutrition board of the National Research Council of the National Academies of Science, part of the Institution of Medicine.

Need and Use of the Information: The purpose of this data collection associated with rulemaking is to comply with the requirements of the HHFKA Public Law 111–296. The rule increases the scope of State Agency (SA) administrative reviews of School Food Authorities (SFA) by combining the current Coordinated Review Effort with the requirements of the School Meals Initiative reviews, and increases their frequency to once every three years as required by the HHFKA. The Food and Nutrition Service would not be able to properly monitor SA and SDA compliance without this data collection.

Description of Respondents: State, Local, or Tribal Government.

Number of Respondents: 122,661.

Frequency of Responses: Recordkeeping; Reporting: On occasion; Monthly.

Total Burden Hours: 9,848,064.

Ruth Brown,

Departmental Information Collection Clearance Officer.

[FR Doc. 2012–28203 Filed 11–19–12; 8:45 am]

BILLING CODE 3410–30–P

BROADCASTING BOARD OF GOVERNORS

SES Performance Review Board; Membership

AGENCY: Broadcasting Board of Governors (BBG).

ACTION: Notice of Membership of SES Performance Review Board.

SUMMARY: Title 5 United States Code, Section 4314, requires that notice of the appointment of an individual to serve as a member of a performance review board (PRB) shall be published in the **Federal Register**. The following individuals have been appointed to serve as members of the PRB for the Broadcasting Board of Governors: Marie E. Lennon, Chief of Staff, International Broadcasting Bureau; Kelu Chao, Director of Performance Review, International Broadcasting Bureau; and Mark L. Prahl, Associate Director for Operations, Voice of America.

ADDRESSES: Broadcasting Board of Governors, 330 Independence Ave. SW., Washington, DC 20237.

FOR FURTHER INFORMATION CONTACT: Donna S. Grace, Director, Office of Human Resources, 202–382–7500.

Jeffrey N. Trimble,

Deputy Director, International Broadcasting Bureau.

[FR Doc. 2012–28257 Filed 11–19–12; 8:45 am]

BILLING CODE 8610–01–P

DEPARTMENT OF COMMERCE

Foreign-Trade Zones Board

[Order No. 1867]

Expansion and Reorganization of Foreign-Trade Zone 33 Pittsburgh, PA

Pursuant to its authority under the Foreign-Trade Zones Act of June 18, 1934, as amended (19 U.S.C. 81a–81u), the Foreign-Trade Zones Board (the Board) adopts the following Order:

Whereas, the Regional Industrial Development Corporation of Southwestern Pennsylvania, grantee of Foreign-Trade Zone 33, submitted an application to the Board for authority to reorganize and expand FTZ 33, to remove acreage from Sites 1, 3, 4, 8, 10, 13, 14 and 16, to expand existing Sites 4 and 10, and to add a new site (Site 18) in the Pittsburgh, Pennsylvania, area, adjacent to the Pittsburgh Customs and Border Protection port of entry (FTZ Docket 75–2011, filed 11/16/11);

Whereas, notice inviting public comment has been given in the **Federal Register** (76 FR 72673–72674, 11/25/11) and the application has been processed pursuant to the FTZ Act and the Board's regulations; and,

Whereas, the Board adopts the findings and recommendations of the examiner's report, and finds that the requirements of the FTZ Act and the Board's regulations are satisfied, and that the proposal is in the public interest;

Now, therefore, the Board hereby orders:

The application to reorganize and expand FTZ 33 is approved, subject to the FTZ Act and the Board's regulations, including Section 400.13, to the Board's standard 2,000-acre activation limit, and to a sunset provision that would terminate authority on October 31, 2017 for Site 18 if no activity has occurred under FTZ procedures before that date. Sites 6–17 remain subject to a sunset provision that would terminate authority on February 28, 2015 where no activity has occurred under FTZ procedures before that date.

Signed at Washington, DC, this 5th day of November 2012.

Paul Piquado,

Assistant Secretary of Commerce for Import Administration, Alternate Chairman, Foreign-Trade Zones Board.

ATTEST:

Andrew McGilvray,

Executive Secretary.

[FR Doc. 2012–28088 Filed 11–19–12; 8:45 am]

BILLING CODE P

DEPARTMENT OF COMMERCE

International Trade Administration

President's Export Council: Meeting of the President's Export Council

AGENCY: International Trade Administration, U.S. Department of Commerce.

ACTION: Notice of an open meeting.

SUMMARY: The President's Export Council will hold a meeting to deliberate on recommendations related to export expansion through streamlined consideration of trade legislation and through building a competitive manufacturing workforce. The final agenda will be posted in advance of the meeting on the President's Export Council Web site at *http://trade.gov/pec.*

DATES: December 6, 2012 at 8:00 a.m. (ET).

ADDRESSES: The President's Export Council meeting will be broadcast via live webcast on the Internet at *http://whitehouse.gov/live.*

FOR FURTHER INFORMATION CONTACT: Tricia Van Orden, Executive Secretary, President's Export Council, Room 4043, 1401 Constitution Avenue NW., Washington, DC 20230, telephone: 202–482–5876, email: *tricia.vanorden@trade.gov.*

SUPPLEMENTARY INFORMATION:

Background: The President's Export Council was first established by Executive Order on December 20, 1973 to advise the President on matters relating to U.S. export trade and report to the President on its activities and on its recommendations for expanding U.S. exports. The President's Export Council was renewed most recently by Executive Order 13585 of September 30, 2011, for the two-year period ending September 30, 2013. This Committee is established in accordance with the provisions of the Federal Advisory Committee Act (FACA), as amended, 5 U.S.C. App.

Public Submissions: The public is invited to submit written statements to the President's Export Council by C.O.B. November 30, 2012 by either of the following methods:

Electronic Submissions

Submit statements electronically via the President's Export Council Web site at *http://trade.gov/pec/peccomments.asp;* or

Paper Submissions

Send paper statements to Tricia Van Orden, Executive Secretary, President's Export Council, Room 4043, 1401 Constitution Avenue NW., Washington, DC 20230. Statements will be posted on the President's Export Council Web site (*http://trade.gov/pec/peccomments.asp*) without change, including any business or personal information provided such as names, addresses, email addresses, or telephone numbers. All statements received, including attachments and other supporting materials, are part of the public record and subject to public disclosure. You should submit only information that you wish to make publicly available.

Meeting minutes: Copies of the Council's meeting minutes will be available within ninety (90) days of the meeting.

Dated: November 15, 2012.

Tricia Van Orden,

Executive Secretary, President's Export Council.

[FR Doc. 2012–28233 Filed 11–19–12; 8:45 am]

BILLING CODE 3510–DR–P

DEPARTMENT OF COMMERCE

International Trade Administration

U.S. Multi-Sector Trade Mission to South India and Sri Lanka

AGENCY: International Trade Administration, Department of Commerce.

ACTION: Amendment to Notice.

SUMMARY: The United States Department of Commerce, International Trade Administration, U.S. and Foreign Commercial Service is amending the Notice regarding the U.S. Multi-Sector Trade Mission to South India (Chennai and Cochin) and Sri Lanka (Colombo) February 3–8, 2013, published at 77 FR 48499, August 14, 2012 to revise the application deadline from November 30, 2012 to the new deadline of December 21, 2012, to provide for selection of applicants on a rolling basis, and to expand the eligibility to include U.S. trade associations.

FOR FURTHER INFORMATION CONTACT:

San Jose (Silicon Valley) Export Assistance Center, Aileen Crowe Nandi, Commercial Officer, 55 S. Market Street, Suite 1040, San Jose, CA 95113, Tel: (408) 535–2757, ex. 102, Email: *aileen.nandi@trade.gov.*

U.S. Commercial Service India, James P. Golsen, Principal Commercial Officer for South India, U.S. Commercial Service, Chennai, India, Tel: +91–44–2857–4209, Email: *james.golsen@trade.gov.*

U.S. Commercial Service Washington, DC, Arica Young, U.S. Commercial Service, Washington, DC, Tel: 202.482.2833, Email: *Arica.Young@trade.gov.*

SUPPLEMENTARY INFORMATION: In August 2012 the Department of Commerce initiated recruitment for participation in the U.S. Multi-Sector Trade Mission to Chennai and Cochin, India and Colombo, Sri Lanka on February 3–8, 2013, published at 77 FR 48499, August 14, 2012, as previously amended by notice at 77 FR 59899 (Oct. 1, 2012) adding architectural services as a targeted sector for this mission. Due to the Thanksgiving holidays and disruptions related to Hurricane Sandy, it has been determined that additional time is needed to allow for additional recruitment and marketing in support of the mission. Applications now will be accepted through December 21, 2012. Interested firms and trade associations in the architecture, infrastructure, hospitality, healthcare, and environmental and information technologies sectors, including firms and trade associations that have not already submitted an application, are encouraged to apply. Applications will be accepted after the deadline only to the extent that space remains and scheduling constraints permit. In addition, to facilitate the ability of firms to take the mission into account in their business planning, US&FCS will begin to make selection decisions beginning November 15, 2012.

As originally published, the **Federal Register** notice of the trade mission stated that only U.S. companies were eligible to participate in the trade mission. In response to the interest expressed by trade associations, US&FCS is amending the notice to expand the eligibility to include U.S. trade associations.

Amendments

The Fees and Expenses, Conditions for Participation, Selection Criteria for Participation, and Timeframe for Recruitment and Applications sections of the U.S. Multi-Sector Trade Mission to Chennai and Cochin, India and Colombo, Sri Lanka are amended to read as follows:

Fees and Expenses

After a company or trade association has been selected to participate on the mission, a payment to the U.S. Department of Commerce in the form of a participation fee is required. The participation fee is $4,481 for large firms and $4,303 for small or medium-sized enterprises (SME) [1] and trade associations. The fee for each additional representative (large firm or SME/trade association) is $750. Expenses for travel,

[1] An SME is defined as a firm with 500 or fewer employees or that otherwise qualifies as a small business under SBA regulations (see *http://www.sba.gov/services/contracting opportunities/sizestandardstopics/index.html*). Parent companies, affiliates, and subsidiaries will be considered when determining business size. The dual pricing reflects the Commercial Service's user fee schedule that became effective May 1, 2008 (see *http://www.export.gov/newsletter/march2008/initiatives.html* for additional information).

lodging, some meals, and incidentals will be the responsibility of each mission participant.

Conditions for Participation

Applicants must submit a completed and signed mission application and supplemental application materials, including adequate information on the company's (or in the case of a trade association, member companies') products and/or services, primary market objectives, and goals for participation. If the Department of Commerce receives an incomplete application, the Department may either: reject the application, request additional information/clarification, or take the lack of information into account when evaluating the applications.

Each applicant must also certify that the products and services it seeks to export through the mission are either produced in the United States, or, if not, are marketed under the name of a U.S. firm and have at least fifty-one percent U.S. content. In the case of a trade association, the applicant must certify that for each company to be represented by the association, the products and/or services the represented company seeks to export are either produced in the United States or, if not, marketed under the name of a U.S. firm and have at least fifty-one percent U.S. content.

Selection Criteria for Participation

- Suitability of the company's (or in the case of a trade association, member companies') products or services to the mission goals.
- Applicant's (or in the case of a trade association, member companies') potential for business in India and Sri Lanka, including likelihood of exports resulting from the mission.
- Consistency of the applicant's (or in the case of a trade association, member companies') goals and objectives with the stated scope of the mission.

Additional factors, such as diversity of company size, type, location, and demographics, may also be considered during the review process.

Referrals from political organizations and any documents containing references to partisan political activities (including political contributions) will be removed from an applicant's submission and not considered during the selection process.

Timeframe for Recruitment and Applications

Mission recruitment will be conducted in an open and public manner, including publication in the **Federal Register**, posting on the Commerce Department trade mission calendar—*http://export.gov/trademissions/index.asp—and* other Internet Web sites, press releases to general and trade media, direct mail, broadcast fax, notices to industry trade associations and other multiplier groups, and publicity at industry meetings, symposia, conferences, and trade shows.

Recruitment for the mission began in August 2012 and will conclude December 21, 2012 for U.S. company and trade association participants. The U.S. Department of Commerce will being reviewing applications and making selection decisions on a rolling basis beginning November 15, 2012, until the maximum of 20 participants is selected. Applications received by U.S. companies after October 12, 2012 and by U.S. trade associations after November 12, 2012, will be considered only if space and scheduling constraints permit.

Elnora Moye,

Trade Program Assistant.

[FR Doc. 2012–28222 Filed 11–19–12; 8:45 am]

BILLING CODE 3510–FP–P

DEPARTMENT OF COMMERCE

National Oceanic and Atmospheric Administration

RIN 0648–XC266

Atlantic Highly Migratory Species; Exempted Fishing, Scientific Research, Display, and Chartering Permits; Letters of Acknowledgment

AGENCY: National Marine Fisheries Service (NMFS), National Oceanic and Atmospheric Administration (NOAA), Commerce.

ACTION: Notice of intent; request for comments.

SUMMARY: NMFS announces its intent to issue Exempted Fishing Permits (EFPs), Scientific Research Permits (SRPs), Display Permits, Letters of Acknowledgment (LOAs), and Chartering Permits for the collection of Atlantic Highly Migratory Species (HMS) in 2013. In general, EFPs and related permits would authorize collection of a limited number of tunas, swordfish, billfishes, and sharks from Federal waters in the Atlantic Ocean, Caribbean Sea, and Gulf of Mexico for the purposes of scientific data collection and public display. Chartering Permits allow the collection of HMS on the high seas or in the Exclusive Economic Zone of other nations. Generally, EFPs and related permits will be valid from the date of issuance through December 31, 2013, unless otherwise specified, subject to the terms and conditions of individual permits.

DATES: Written comments on these activities received in response to this notice will be considered by NMFS when issuing EFPs and related permits and must be received on or before December 20, 2012.

ADDRESSES: Comments may be submitted by any of the following methods:

- *Email: HMSEFP.2013@noaa.gov.* Include in the subject line the following identifier: 0648–XC266.
- *Mail:* Craig Cockrell, Highly Migratory Species Management Division (F/SF1), NMFS, 1315 East-West Highway, Silver Spring, MD 20910.
- *Fax:* (301) 713–1917.

FOR FURTHER INFORMATION CONTACT: Craig Cockrell or Michael Clark, phone: (301) 427–8503, fax: (301) 713–1917.

SUPPLEMENTARY INFORMATION: Issuance of EFPs and related permits are necessary for the collection of HMS for public display and scientific research that is exempt from regulations (e.g., fishing seasons, prohibited species, authorized gear, closed areas, and minimum sizes) that may prohibit the collection of live animals or biological samples. Collection for scientific research and display represents a small portion of the overall fishing mortality for HMS, and this mortality is counted against the quota of the species harvested, as appropriate and applicable. The terms and conditions of individual permits are unique; however, all permits will include reporting requirements, limit the number and species of HMS to be collected, and only authorize collection in Federal waters of the Atlantic Ocean, Gulf of Mexico, and Caribbean Sea.

EFPs and related permits are issued under the authority of the Magnuson-Stevens Fishery Conservation and Management Reauthorization Act (Magnuson-Stevens Act) (16 U.S.C. 1801 *et seq.*) and/or the Atlantic Tunas Convention Act (ATCA) (16 U.S.C. 971 *et seq.*). Regulations at § 600.745 and § 635.32 govern scientific research activity, exempted fishing, chartering arrangements, and exempted educational activities with respect to Atlantic HMS. Since the Magnuson-Stevens Act does not consider scientific research to be ''fishing,'' scientific research is exempt from this statute, and NMFS does not issue EFPs for bona fide research activities (e.g., research conducted from a research vessel and not a commercial or recreational fishing vessel) involving species that are only regulated under the Magnuson-Stevens

Act (e.g., most species of sharks) and not under ATCA. NMFS generally does not consider recreational or commercial vessels bona fide research vessels. However, if the vessels have been contracted to only conduct research and not participate in any commercial or recreational fishing activities during that research, NMFS may consider those vessels as bona fide research platforms while conducting the specified research. As an example, NMFS has considered the recreational and commercial vessels contracted to conduct research under the Deepwater Horizon/BP oil spill as bona fide research platforms. NMFS requests copies of scientific research plans for these activities and indicates concurrence by issuing an LOA to researchers to indicate that the proposed activity meets the definition of research and is therefore exempt from regulation. Examples of research conducted under LOAs include tagging and releasing of sharks during bottom longline surveys to understand the distribution and seasonal abundance of different shark species, and collecting and sampling sharks caught during trawl surveys for life history studies.

Scientific research is not exempt from regulation under ATCA. NMFS issues SRPs for collection of species managed under this statute (e.g., tunas, swordfish, billfish, and some species of sharks), which authorize researchers to collect HMS from bona fide research vessels. One example of research conducted under SRPs consists of scientific surveys of HMS conducted from the NOAA research vessels. EFPs are issued to researchers collecting ATCA-managed species and conducting research from commercial or recreational fishing vessels. NMFS regulations concerning the implantation or attachment of archival tags in Atlantic HMS require scientists to report their activities associated with these tags. Examples of research conducted under EFPs include deploying pop-up satellite archival tags on billfish, sharks, and tunas to determine migration patterns of these species; conducting billfish larval tows to determine billfish habitat use, life history, and population structure; and determining catch rates and gear characteristics of the swordfish buoy gear fishery.

NMFS is also seeking public comment on its intent to issue Display Permits for the collection of sharks and other HMS for public display in 2013. Collection of sharks and other HMS sought for public display in aquaria often involves collection when the commercial fishing seasons are closed, collection of otherwise prohibited species, and collection of fish below the minimum size. NMFS established a 60-metric ton (mt) whole weight (ww) (approximately 3,000 sharks) quota for the public display and research of sharks (combined) in the final Fishery Management Plan for Atlantic Tunas, Swordfish, and Sharks (1999 FMP). The public display and scientific research quotas for sandbar sharks are limited to 2.78 mt ww (2 mt dressed weight (dw)): 1.39 mt ww for public display and 1.39 mt ww for scientific research. Public display of dusky sharks is prohibited. These quotas have been analyzed in conjunction with other sources of mortality under Amendment 2 to the 2006 Consolidated HMS FMP, and NMFS has determined that harvesting this amount for public display will not have a significant impact on the stocks. The number of sharks harvested for display and research has remained under the annual 60-mt ww quota every year since establishment of the quota. In 2011, approximately 58 percent of the sharks authorized for public display and scientific research purposes were actually harvested or discarded dead. Amendment 3 to the 2006 Consolidated HMS FMP also established a separate set-aside quota for smoothhound sharks (i.e., smooth dogfish and Florida smoothhounds) taken for research purposes, which would be in addition to the overall 60-mt ww quota for the public display and research of all sharks. However, the smoothhound shark research set-aside quota is not yet effective and their harvest resulting from research activities is not yet deducted from the set-aside quota for public display and research of sharks. NMFS will announce when such regulations become effective through a publication in the **Federal Register**.

For the coming year, NMFS is expecting EFP applications that would request some form of ''compensation fishing'' to offset the expenses for vessel owners participating in HMS research efforts. One of the applications would potentially investigate bycatch reduction research, specifically; bycatch ''hotspots'' identified during past research efforts in closed areas of the Atlantic Ocean, Gulf of Mexico and Caribbean Sea, including the Charleston Bump and Florida East Coast Closed Areas. As part of compensation fishing, vessels employed would be authorized to sell some of their catch to offset expenses. This research would test gear modifications and fishing techniques aimed to avoid incidental capture of non-target species. The Agency would provide additional opportunity for public comment on this research. Furthermore, NMFS would seek additional public comment, as necessary, on specific proposals where research is not being conducted solely from bona fide research vessels or fishing vessels specifically contracted to conduct scientific research.

NMFS is also aware of research activities that may be proposed in 2013 that would investigate bluefin tuna life history and migration patterns from pelagic longline vessels. This request would also potentially involve compensation fishing (i.e., the ability for vessels to sell additional bluefin tuna in excess of the retention limits) to offset costs of vessels participating in the research. Compensation fishing is only authorized if the researchers and vessels have been issued an EFP, consistent with § 600.745 regulations. As stated above, NMFS would seek additional public comments specifically on this type of activity, as necessary, before issuing an EFP if the vessels are not bona fide research vessels.

NMFS is also requesting comments on chartering permits considered for issuance in 2013 to U.S. vessels fishing for HMS while operating under chartering arrangements. NMFS has not issued any chartering permits since 2004. A chartering arrangement is a contract or agreement between a U.S. vessel owner and a foreign entity by which the control, use, or services of a vessel are secured for a period of time for fishing for Atlantic HMS. Before fishing under a chartering arrangement, the owner of the U.S. fishing vessel must apply for a Chartering Permit. The vessel chartering regulations can be found at § 635.5(a)(4) and § 635.32(e).

In 2012, NMFS issued an EFP to scientists researching the methods required to successfully culture bluefin and yellowfin tuna in the United States. Due to the limited number of specimens authorized and the fishing gear employed, the Agency did not seek additional comment because the research was within the scope of the 2012 EFP Notice of Intent. Up to six, 24–27'' yellowfin and bluefin tuna were collected on rod and reel gear and then transported fish to land-based holding tanks where they are kept through their breeding life. If the scientists are successful in breeding yellowfin and bluefin tuna, the research would ultimately provide larvae and juveniles for an array of investigations. No release of fish from the holding tanks is authorized under the permit. The Agency expects to receive additional applications for this type of research in 2013.

In addition, Amendment 2 to the 2006 Consolidated HMS FMP implemented a shark research fishery. This research

fishery is conducted under the auspices of the exempted fishing program. Research fishery permit holders assist NMFS in collecting valuable shark life history data and data for future shark stock assessments. Fishermen must fill out an application for a shark research permit under the exempted fishing program to participate in the shark research fishery. Shark research fishery participants are subject to 100-percent observer coverage in addition to other terms and conditions. A **Federal Register** notice describing the objectives for the shark research fishery in 2013 is expected to publish in the near future.

The authorized number of species for 2012, as well as the number of specimens collected in 2011, is summarized in Table 1. The number of specimens collected in 2012 will be available when all 2012 interim and annual reports are submitted to NMFS. In 2011, the number of specimens collected was less than the number of authorized specimens for most permit types, with the exception of the number of larvae collected under billfish EFPs, and sharks taken under SRPs and Display permits. It is difficult to control the quantity of larvae that may be caught when sampling fish larvae. However, the impacts of these collections on fish populations are not expected to be significant given the high level of natural mortality of fish larvae. As for sharks taken under EFPs, SRPs, and Display Permits, 3,178 of the sharks taken were Atlantic sharpnose sharks collected during trips using longline gear; it is also difficult to control the number and species of animals caught when using this gear type. However, as Atlantic sharpnose sharks were not found to be overfished nor have overfishing occurring during its most recent stock assessment in 2007, these collections are not expected to have any impacts on Atlantic sharpnose populations.

In all cases, mortality associated with an EFP, SRP, Display Permit, or LOA (except for larvae) is counted against the appropriate quota. NMFS issued a total of 32 EFPs, SRPs, Display Permits, and LOAs in 2011 for the collection of HMS. As of October 31, 2012, NMFS has issued a total of 43 EFPs, SRPs, Display Permits, and LOAs. These do not include permits that were issued for research related to the Deepwater Horizon/BP oil spill in the Gulf of Mexico. In 2012, three permits were issued for research related to the oil spill in the Gulf of Mexico.

TABLE 1—SUMMARY OF HMS EXEMPTED PERMITS ISSUED IN 2011 AND 2012

["HMS" refers to multiple species being collected under a given permit type]

Permit type	2011					2012		
	Permits issued**	Authorized fish (num)	Authorized larvae (num)	Fish kept/ discarded dead (num)	Larvae kept (num)	Permits issued**	Authorized fish (num)	Authorized larvae (num)
EFP:								
HMS	2	273	0	34	0	3	163	0
Shark	8	1,377	0	†2,356	0	10	1,118	0
Tuna	5	695	0	6	0	5	687	0
Billfish	2	40	1,000	0	2,243	1	20	1,000
SRP:								
HMS	1	83	0	80	0	4	83	0
Shark	3	1,365	0	†1,484	0	4	2,160	0
Tuna	1	110	0	0	0	3	610	2,000
Display:								
HMS	2	124	0	6	0	2	126	0
Shark	3	87	0	†178	0	4	115	0
Total	27	4,154	1,000	4,485	2,243	36	5,082	3,000
LOA*:								
Shark	5	5,367	0	699	0	7	2,140	0

*LOAs are issued for bona fide scientific research activities involving non-ATCA managed species (*e.g.,* most species of sharks). Collections made under an LOA are not authorized; rather this estimated harvest for research is acknowledged by NMFS. Permitees are encouraged to report all fishing activities in a timely manner.

**2011 & 2012 permits issued listed in Table 1 do not include permits issued solely for research related to the Deepwater Horizon/BP oil spill research in the Gulf of Mexico.

†All additional collections above the authorized levels were due to incidentally caught Atlantic sharpnose sharks.

Final decisions on the issuance of any EFPs, SRPs, Display Permits, and Chartering Permits will depend on the submission of all required information about the proposed activities, NMFS review of public comments received on this notice, an applicant's reporting history on past permits issued, any prior violations of marine resource laws administered by NOAA, consistency with relevant NEPA documents, and any consultations with appropriate Regional Fishery Management Councils, states, or Federal agencies. NMFS does not anticipate any significant environmental impacts from the issuance of these EFPs as assessed in the 1999 FMP, Amendment 2 to the 2006 Consolidated HMS FMP, 2011 Bluefin Tuna Specifications, and 2012 Swordfish Specifications.

Authority: 16 U.S.C. 971 *et seq.* and 16 U.S.C. 1801 *et seq.*

Dated: November 14, 2012.

Emily H. Menashes,

Deputy Director, Office of Sustainable Fisheries, National Marine Fisheries Service.

[FR Doc. 2012–28258 Filed 11–19–12; 8:45 am]

BILLING CODE 3510–22–P

DEPARTMENT OF COMMERCE

National Oceanic and Atmospheric Administration

RIN 0648–XC321

Atlantic Highly Migratory Species; Advisory Panel for Atlantic Highly Migratory Species Southeast Data, Assessment, and Review Workshops

AGENCY: National Marine Fisheries Service (NMFS), National Oceanic and Atmospheric Administration (NOAA), Commerce.

ACTION: Notice; nominations for Advisory Panel.

SUMMARY: NMFS solicits nominations for the Advisory Panel (AP) for Atlantic Highly Migratory Species (HMS) Southeast Data, Assessment, and Review (SEDAR) Workshops (this AP is also called the ''SEDAR Pool''). The SEDAR Pool is comprised of a group of individuals whom may be selected to consider data and advise NMFS regarding the scientific information, including but not limited to data and models, used in stock assessments for oceanic sharks in the Atlantic Ocean, Gulf of Mexico, and Caribbean Sea. Nominations are being sought for a 3-year appointment (2013–2015). Individuals with definable interests in the recreational and commercial fishing and related industries, environmental community, academia, and non-governmental organizations will be considered for membership on the SEDAR Pool.

DATES: Nominations must be received on or before December 20, 2012.

ADDRESSES: You may submit nominations and request the SEDAR Pool Statement of Organization, Practices, and Procedures by any of the following methods:

- *Email: SEDAR.pool@noaa.gov*.
- *Mail:* Karyl Brewster-Geisz, Highly Migratory Species Management Division, NMFS, 1315 East-West Highway, Silver Spring, MD 20910. Include on the envelope the following identifier: ''SEDAR Pool Nomination.''
- *Fax:* 301–713–1917.

Additional information on SEDAR and the SEDAR guidelines can be found at *http://www.sefsc.noaa.gov/sedar/*. The terms of reference for the SEDAR Pool, along with a list of current members, can be found at *http://www.nmfs.noaa.gov/sfa/hms/SEDAR/SEDAR.htm*.

FOR FURTHER INFORMATION CONTACT: Delisse Ortiz or Karyl Brewster-Geisz, (301) 425–8503.

SUPPLEMENTARY INFORMATION:

Introduction

Section 302(g)(2) of the Magnuson-Stevens Fishery Conservation and Management Act (Magnuson-Stevens Act), 16 U.S.C. 1801 *et seq.,* states that each Council shall establish such advisory panels as are necessary or appropriate to assist it in carrying out its functions under the Act. The Magnuson-Stevens Act provides that this section is applicable to HMS Management by the Secretary as well as by Councils. As such, NMFS has established the SEDAR Pool under this section. The SEDAR Pool currently consists of 32 individuals who can be selected to review data and advise NMFS regarding the scientific information, including but not limited to data and models, used in stock assessments for oceanic sharks in the Atlantic Ocean, Gulf of Mexico, and Caribbean Sea. While the SEDAR Pool was created specifically for Atlantic oceanic sharks, it may be expanded to include other HMS, as needed.

The primary purpose of the individuals in the SEDAR Pool is to review, at SEDAR workshops, the scientific information (including but not limited to data and models) used in stock assessments that are used to advise NMFS, as a delegate to the Secretary of Commerce (Secretary), about the conservation and management of the Atlantic HMS, specifically but not limited to, Atlantic sharks. Individuals in the SEDAR Pool, if selected, may participate in the various data, assessment, and review workshops during the SEDAR process of any HMS stock assessment. In order to ensure that the peer review is unbiased, individuals who participated in a data and/or assessment workshop for a particular stock assessment will not be allowed to serve as reviewers for the same stock assessment. However, these individuals may be asked to attend the review workshop to answer specific questions from the reviewers concerning the data and/or assessment workshops. Members of the SEDAR Pool may serve as members of other APs concurrent with, or following, their service on the SEDAR Pool.

Procedures and Guidelines

A. Participants

The SEDAR Pool is comprised of individuals representing the commercial and recreational fishing communities for Atlantic sharks, the environmental community active in the conservation and management of Atlantic sharks, and the academic community that have relevant expertise either with sharks or shark-like species and/or stock assessment methodologies for marine fish species. Members of the SEDAR Pool must have demonstrated experience in the fisheries, related industries, research, teaching, writing, conservation, or management of marine organisms. The distribution of representation among the interested parties is not defined or limited.

Additional members of the SEDAR Pool may also include representatives from each of the five Atlantic Regional Fishery Management Councils, each of the 18 states, both the U.S. Virgin Islands and Puerto Rico, and each of the interstate commissions: the Atlantic States Marine Fisheries Commission and the Gulf States Marine Fisheries Commission.

If NMFS requires additional members to ensure a diverse pool of individuals for data or assessment workshops, NMFS may request individuals to become members of the SEDAR Pool outside of the annual nomination period.

Panel members serve at the discretion of the Secretary. Not all members will attend each SEDAR workshop. Rather, NMFS will invite certain members to participate at specific stock assessment workshops dependent on their ability to participate, discuss, and recommend scientific decisions regarding the species being assessed. If an invited SEDAR Pool member is unable to attend the workshop, the member may send a designee who may represent them and participate in the activities of the workshop. In order to ensure the designee meets the requirements of participating in the data and/or assessment workshop, the designee must receive written approval of the Director of the Office of Sustainable Fisheries at least six weeks in advance of the beginning of the relevant data and/or assessment workshop. Written notification must include the name, address, telephone, email, and position of the individual designated. A designee may not name another designee.

NMFS is not obligated to fulfill any requests (e.g., requests for an assessment of a certain species) that may be made by the SEDAR Pool or its individual members. Members of the SEDAR Pool who are invited to attend stock assessment workshops will not be compensated for their services but may be reimbursed for their travel-related expenses to attend such workshops.

B. Nomination Procedures for Appointments to the SEDAR Pool

Member tenure will be for 3 years. Nominations are sought for terms beginning early in 2013 and expiring three years later in 2015. Nomination packages should include:

1. The name, address, phone number, and email of the applicant or nominee;
2. A description of his/her interest in Atlantic shark stock assessments or the Atlantic shark fishery;
3. A statement of background and/or qualifications; and
4. A written commitment that the applicant or nominee shall participate actively and in good faith in the tasks of the SEDAR Pool, as requested.

C. Meeting Schedule

Individual members of the SEDAR Pool meet to participate in stock assessments at the discretion of the Office of Sustainable Fisheries, NMFS. Stock assessment timing, frequency, and relevant species will vary depending on the needs determined by NMFS and SEDAR staff. Currently, NMFS anticipates holding stock assessments for Atlantic sharpnose and bonnethead sharks in 2013 and finetooth and smoothhound sharks in 2014. The specific number and type of meetings or dates for those stock assessments have not yet been determined. Meetings and meeting logistics will be determined according to the SEDAR Guidelines. All meetings are open for observation by the public.

Dated: November 14, 2012.

Emily H. Menashes,

Deputy Director, Office of Sustainable Fisheries, National Marine Fisheries Service.

[FR Doc. 2012–28247 Filed 11–19–12; 8:45 am]

BILLING CODE 3510–22–P

DEPARTMENT OF COMMERCE

National Telecommunications and Information Administration

Commerce Spectrum Management Advisory Committee Meeting

AGENCY: National Telecommunications and Information Administration, U.S. Department of Commerce.

ACTION: Notice of open meeting.

SUMMARY: This notice announces a public meeting of the Commerce Spectrum Management Advisory Committee (Committee). The Committee provides advice to the Assistant Secretary of Commerce for Communications and Information on spectrum management policy matters.

DATES: The meeting will be held on January 17, 2013, from 10:00 a.m. to 1:00 p.m., Eastern Standard Time (EST).

ADDRESSES: The meeting will be held at the U.S. Department of Commerce, 1401 Constitution Avenue NW., Room 4830, and Washington, DC 20230. Public comments may be mailed to Commerce Spectrum Management Advisory Committee, National Telecommunications and Information Administration, 1401 Constitution Avenue NW., Room 4099, Washington, DC 20230 or emailed to *spectrumadvisory@ntia.doc.gov.*

FOR FURTHER INFORMATION CONTACT: Bruce M. Washington, Designated Federal Officer, at (202) 482–6415 or *BWashington@ntia.doc.gov;* and/or visit NTIA's Web site at *http://www.ntia.doc.gov/category/CSMAC.*

SUPPLEMENTARY INFORMATION:

Background: The Committee provides advice to the Assistant Secretary of Commerce for Communications and Information on needed reforms to domestic spectrum policies and management in order to: license radio frequencies in a way that maximizes their public benefits; keep wireless networks as open to innovation as possible; and make wireless services available to all Americans. (*See* charter, at *http://www.ntia.doc.gov//page/2011/csmac-charter*). This Committee is subject to the Federal Advisory Committee Act (FACA), 5 U.S.C. App. 2, and is consistent with the National Telecommunications and Information Administration Act, 47 U.S.C. 904(b). The Committee functions solely as an advisory body in compliance with the FACA. For more information about the Committee visit: *http://www.ntia.doc.gov/category/CSMAC.*

Matters To Be Considered: The Committee will receive reports from designated committee members on the recommendations of working groups (WGs) which were established to facilitate collaboration efforts between industry and government stakeholders to develop proposed relocation, transition, and sharing arrangements and plans for the 1695–1710 MHz and the 1755–1850 MHz bands:

1. WG1 1695–1710 MHz Weather Satellite Receive Earth Stations,
2. WG2 1755–1850 MHz Law Enforcement Surveillance and other short-range fixed,
3. WG3 1755–1850 MHz Satellite Control Links and Electronic Warfare,
4. WG4 1755–1850 MHz Fixed Point-to-Point and Tactical Radio Relay, and
5. WG5 1755–1850 MHz Airborne Operations.

NTIA will post a detailed agenda on its Web site, *http://www.ntia.doc.gov,* prior to the meeting. To the extent that the meeting time and agenda permit, any member of the public may speak to or otherwise address the advisory committee regarding agenda items. During the portion of the meeting when the public may make an oral presentation, speakers may address only matters the subject of which are on the agenda. (See policy: *http://www.ntia.doc.gov/category/csmac.*)

Time and Date: The meeting will be held on January 17, 2013 from 10:00 a.m. to 1:00 p.m., Eastern Standard Time (EST). The times and the agenda topics are subject to change. The meeting will be available via two-way audio link and may be webcast. Please refer to NTIA's web site, *http://www.ntia.doc.gov,* for the most up-to-date meeting agenda and access information.

Place: The meeting will be held at the U.S. Department of Commerce, National Telecommunications and Information Administration, 1401 Constitution Avenue NW., Room 4830, Washington, DC 20230. The meeting will be open to the public and press on a first-come, first-served basis. Space is limited. The public meeting is physically accessible to people with disabilities. Individuals requiring accommodations, such as sign language interpretation or other ancillary aids, are asked to notify Mr. Washington, at (202) 482–6415 or *BWashington@ntia.doc.gov,* at least five (5) business days before the meeting.

Status: Interested parties are invited to attend and to submit written comments to the Committee at any time before or after the meeting. Parties wishing to submit written comments for consideration by the Committee in advance of this meeting must send them to NTIA's Washington, DC office at the above-listed address and comments must be received by close of business on January 10, 2013, to provide sufficient time for review. Comments received after January 10, 2013 will be distributed to the Committee, but may not be reviewed prior to the meeting. It would be helpful if paper submissions also include a compact disc (CD) in HTML, ASCII, Word, or WordPerfect format (please specify version). CDs should be labeled with the name and organizational affiliation of the filer, and the name of the word processing program used to create the document. Alternatively, comments may be submitted electronically to *spectrumadvisory@ntia.doc.gov.* Comments provided via electronic mail also may be submitted in one or more of the formats specified above.

Records: NTIA maintains records of all Committee proceedings. Committee records are available for public inspection at NTIA's Washington, DC office at the address above. Documents including the Committee's charter, member list, agendas, minutes, and any reports are available on NTIA's

Committee web page at *http://www.ntia.doc.gov/category/CSMAC.*

Dated: November 15, 2012.

Kathy D. Smith,

Chief Counsel, National Telecommunications and Information Administration.

[FR Doc. 2012–28249 Filed 11–19–12; 8:45 am]

BILLING CODE 3510–60–P

COMMITTEE FOR PURCHASE FROM PEOPLE WHO ARE BLIND OR SEVERELY DISABLED

Procurement List Proposed Addition

AGENCY: Committee for Purchase From People Who Are Blind or Severely Disabled.

ACTION: Proposed addition to the procurement list.

SUMMARY: The Committee is proposing to add a service to the Procurement List that will be provided by the nonprofit agency employing persons who are blind or have other severe disabilities.

Comments Must be Received on or Before: 12/21/2012.

ADDRESSES: Committee for Purchase From People Who Are Blind or Severely Disabled, Jefferson Plaza 2, Suite 10800, 1421 Jefferson Davis Highway, Arlington, Virginia 22202–3259.

For Further Information or to Submit Comments Contact: Barry S. Lineback, Telephone: (703) 603–7740, Fax: (703) 603–0655, or email *CMTEFedReg@AbilityOne.gov.*

SUPPLEMENTARY INFORMATION: This notice is published pursuant to 41 U.S.C. 8503 (a)(2) and 41 CFR 51–2.3. Its purpose is to provide interested persons an opportunity to submit comments on the proposed actions.

Addition

If the Committee approves the proposed addition, the entities of the Federal Government identified in this notice will be required to procure the service listed below from the nonprofit agency employing persons who are blind or have other severe disabilities.

The following service is proposed for addition to the Procurement List for production by the nonprofit agency listed:

Service

Service Type/Location: Base Operations Support, Directorate of Public Works, Fort Lee, Virginia.

NPA: Skookum Educational Programs, Bremerton, WA

Contracting Activity: Mission and Installation Contracting Command—Fort Lee, Fort Lee, VA

Barry S. Lineback,

Director, Business Operations.

[FR Doc. 2012–28180 Filed 11–19–12; 8:45 am]

BILLING CODE 6353–01–P

CONSUMER PRODUCT SAFETY COMMISSION

Sunshine Act Meeting Notice

TIME AND DATE: Wednesday, November 28, 2012, 10:00 a.m.–12:00 p.m.

PLACE: Room 420, Bethesda Towers, 4330 East West Highway, Bethesda, Maryland.

STATUS: Commission Meeting—Open to the Public.

Matters To Be Considered

Decisional Matters

1. Bedside Sleepers—Notice of Proposed Rulemaking;
2. Handheld Carriers—Notice of Proposed Rulemaking;
3. Representative Samples—Final Rule.

A live webcast of the Meeting can be viewed at *www.cpsc.gov/webcast.* For a recorded message containing the latest agenda information, call (301) 504–7948.

CONTACT PERSON FOR MORE INFORMATION: Todd A. Stevenson, Office of the Secretary, U.S. Consumer Product Safety Commission, 4330 East West Highway, Bethesda, MD 20814, (301) 504–7923.

Dated: November 16, 2012.

Todd A. Stevenson,

Secretary.

[FR Doc. 2012–28326 Filed 11–16–12; 4:15 pm]

BILLING CODE 6355–01–P

DEPARTMENT OF DEFENSE

Office of the Secretary

Meeting of the Defense Advisory Committee on Women in the Services (DACOWITS)

AGENCY: Department of Defense.

ACTION: Notice.

SUMMARY: Pursuant to Section 10(a), Public Law 92–463, as amended, notice is hereby given of a forthcoming meeting of the Defense Advisory Committee on Women in the Services (DACOWITS). The meeting is open to the public, subject to the availability of space.

DATES: December 11, 2012, 8:30 a.m.–1:00 p.m.; December 12, 2012, 8:30 a.m.–11:30 a.m.

ADDRESSES: Embassy Suites Hotel, 1300 Jefferson Davis Hwy, Arlington, VA 22202.

FOR FURTHER INFORMATION CONTACT: Mr. Robert Bowling or DACOWITS Staff at 4000 Defense Pentagon, Room 2C548A, Washington, DC 20301–4000. *Robert.bowling@osd.mil.* Telephone (703) 697–2122. Fax (703) 614–6233.

SUPPLEMENTARY INFORMATION:

Purpose of Meeting

The purpose of the meeting is to receive a briefing from the Marine Corps on involuntary assignments to the infantry and closed positions. The Army will give an update briefing on their gender neutral standards, and the Committee will receive a DoD update on sexual assault and prevention and response strategy. Additionally, the Committee will receive a briefing on Legislative Proposal for expanded reproductive health care coverage for military women. Finally, the Committee will approve and vote on the final 2012 report.

Meeting Agenda

Tuesday, December 11, 2012, 8:30 a.m.–1:00 p.m.

—Welcome, Introductions, and Announcements.
—Briefing—U.S. Marine Corps Update.
—Briefing—U.S. Army Update on Gender Neutral Physical Standards.
—Briefing—DoD Update on Sexual Assault Prevention and Response Strategy.
—Briefing—Legislative Proposal on Reproductive Health Care for Women.

Wednesday, December 12, 2012, 8:30 a.m.–11:30 a.m.

—Welcome, Introductions, and Announcements.
—Committee Proposes and Votes on 2012 Report.
—Public Comment Period.

Written Statements

Interested persons may submit a written statement for consideration by the Defense Advisory Committee on Women in the Services. Individuals submitting a written statement must submit their statement to the Point of Contact listed in **FOR FURTHER INFORMATION CONTACT** no later than 5:00 p.m., Friday, December 7, 2012. If a written statement is not received by Friday, December 7, 2012, prior to the meeting, which is the subject of this notice, then it may not be provided to or considered by the Defense Advisory Committee on Women in the Services until its next open meeting. The Designated Federal Officer will review

all timely submissions with the Defense Advisory Committee on Women in the Services Chairperson and ensure they are provided to the members of the Defense Advisory Committee on Women in the Services.

Oral Statements

If members of the public are interested in making an oral statement, a written statement should be submitted as above. After reviewing the written comments, the Chairperson and the Designated Federal Officer will determine who of the requesting persons will be able to make an oral presentation of their issue during an open portion of this meeting or at a future meeting. Determination of who will be making an oral presentation is at the sole discretion of the Committee Chair and the Designated Federal Officer and will depend on time available and if the topics are relevant to the Committee's activities. Two minutes will be allotted to persons desiring to make an oral presentation. Oral presentations by members of the public will be permitted only on Wednesday, December 12, 2012 from 10:15 a.m. to 11:15 a.m. in front of the full Committee. Number of oral presentations to be made will depend on the number of requests received from members of the public.

Dated: November 15, 2012.

Aaron Siegel,

Alternate OSD Federal Register Liaison Officer, Department of Defense.

[FR Doc. 2012–28141 Filed 11–19–12; 8:45 am]

BILLING CODE 5001–06–P

DEPARTMENT OF DEFENSE

Office of the Secretary

Reserve Forces Policy Board (RFPB); Notice of Advisory Committee Meeting

AGENCY: Reserve Forces Policy Board, Office of the Secretary of Defense, Department of Defense.

ACTION: Notice of Advisory Committee Meeting.

SUMMARY: Under the provisions of the Federal Advisory Committee Act of 1972 (5 U.S.C., Appendix, as amended), the Government in the Sunshine Act of 1976 (5 U.S.C. 552b, as amended), and 41 CFR 102–3.150, the Department of Defense announces the following Federal advisory committee meeting of the Reserve Forces Policy Board (RFPB) will take place.

DATES: Wednesday, December 12, 2012, from 8:15 a.m. to 3:40 p.m.

ADDRESSES: The address is the Pentagon, Room 3E863, Arlington, VA.

FOR FURTHER INFORMATION CONTACT: CAPT Steven Knight, Designated Federal Officer, (703) 681–0608 (Voice), (703) 681–0002 (Facsimile), *RFPB@osd.mil.* Mailing address is Reserve Forces Policy Board, 5113 Leesburg Pike, Suite 601, Falls Church, VA 22041. Web site: *http://ra.defense.gov/rfpb/.*

SUPPLEMENTARY INFORMATION:

Purpose of the Meeting: The purpose of the meeting is to obtain, review and evaluate information related to strategies, policies, and practices designed to improve and enhance the capabilities, efficiency, and effectiveness of the reserve components.

Agenda: The Reserve Forces Policy Board will hold a meeting from 8:15 a.m. until 3:40 p.m. The portion of the meeting from 8:15 a.m. until 1:00 p.m. will be closed and is not open to the public. The open portion of the meeting will consist of administrative details, a final brief from the RFPB's Cost Methodology Project, and RFPB subcommittee briefs from the subcommittee on Ensuring a Ready, Capable, Available, and Sustainable Operational Reserve; the subcommittee on Supporting Service Members, Families & Employers; the subcommittee on Enhancing DoD's Role in the Homeland; and the subcommittee on Creating a Continuum of Service. The closed session of the meeting will consist of remarks from the Chief of the National Guard Bureau and all seven Reserve Component Chiefs on the current and future strategies for use of the Reserve Component; the Under Secretary of Defense (Policy) and the Chief of Staff of the Army will discuss Active and Reserve Component force mix; the Vice Chairman of the Joint Chiefs of Staff will discuss Operational Reserve Requirements and his thoughts on Active and Reserve cost studies.

Meeting Accessibility: Pursuant to 5 U.S.C. 552b, as amended, and 41 CFR 102–3.140 through 102–3.165, and the availability of space, the open portion of the meeting is open to the public. To request a seat for the open portion of the meeting, interested persons must email or phone the Designated Federal Officer not later than December 5, 2012 as listed in **FOR FURTHER INFORMATION CONTACT.** In accordance with section 10(d) of the Federal Advisory Committee Act, Public Law 92–463, as amended (5 U.S.C., Appendix), 5 U.S.C. 552b, and 41 CFR 102–3.155, the Department of Defense has determined that the portion of this meeting from 8:15 a.m. until 1:00 p.m. will be closed to the public. Specifically, the Acting Principal Deputy Under Secretary of Defense (Personnel and Readiness), with the coordination of the DoD FACA Attorney, has determined in writing that this portion of the meeting will be closed to the public because it will discuss matters covered by 5 U.S.C. 552b(c)(1).

Written Statements: Pursuant to 41 CFR 102–3.105(j) and 102–3.140 and section 10(a)(3) of the Federal Advisory Committee Act, interested persons may submit written statements to the Reserve Forces Policy Board at any time. Written statements should be submitted to the Reserve Forces Policy Board's Designated Federal Officer at the address or facsimile number listed in **FOR FURTHER INFORMATION CONTACT.** If statements pertain to a specific topic being discussed at a planned meeting, then these statements must be submitted no later than five (5) business days prior to the meeting in question. Written statements received after this date may not be provided to or considered by the Reserve Forces Policy Board until its next meeting. The Designated Federal Officer will review all timely submitted written statements and provide copies to all the committee members before the meeting that is the subject of this notice.

Dated: November 15, 2012.

Aaron Siegel,

Alternate OSD Federal Register Liaison Officer, Department of Defense.

[FR Doc. 2012–28200 Filed 11–19–12; 8:45 am]

BILLING CODE 5001–06–P

DEPARTMENT OF DEFENSE

Office of the Secretary

Renewal of Department of Defense Federal Advisory Committees

AGENCY: DoD.

ACTION: Renewal of Federal Advisory Committee.

SUMMARY: Under the provisions of section 724 of the National Defense Authorization Act for Fiscal Year 2010 (Pub. L. 111–84), the Federal Advisory Committee Act of 1972 (5 U.S.C. Appendix), the Government in the Sunshine Act of 1976 (5 U.S.C. 552b), and 41 CFR 102–3.50(a), the Department of Defense gives notice that it is renewing the charter for the Department of Defense Task Force on the Care, Management, and Transition of Recovering Wounded, Ill, and Injured Members of the Armed Forces (hereafter referred to as ''the Task Force'').

The Task Force is a non-discretionary federal advisory committee that shall (a)

assess the effectiveness of the policies and programs developed and implemented by the Department of Defense (DoD), and by each of the Military Departments, to assist and support the care, management, and transition of recovering wounded, ill, and injured members of the Armed Forces; and (b) make recommendations for the continuous improvements of such policies and programs.

Pursuant to section 724(c) of Public Law 111–84, the Task Force shall, no later than 12 months after the date on which all Task Force members have been appointed and each year thereafter for the life of the Task Force, submit an annual report to the Secretary of Defense on the activities of the Task Force and on the activities of the DoD, to include the Military Departments, to assist and support the care, management, and transition of recovering wounded, ill, and injured members of the Armed Forces.

At a minimum, the Task Force's report shall include the following:

a. The Task Force's findings and conclusions as a result of its assessment of the effectiveness of developed and implemented DoD policies and programs, to include those of the Military Departments, to assist and support the care, management and transition of recovering wounded, ill, and injured members of the Armed Forces.

b. A description of best practices and various ways in which the DoD, to include the Military Departments, could more effectively address matters relating to the care, management, and transition of recovering wounded, ill, and injured members of the Armed Forces, including members of both the Regular and the Reserve Components, and support for their families.

c. A plan listing and describing the Task Force's activities for the upcoming year covered by its annual report.

d. Such recommendations for other legislative or administrative action as the Task Force considers appropriate for measures to improve DoD-wide policies and programs in (a) above.

The Task Force, for the purpose of its reports, shall fully comply with sections 724(c)(2) and (3) of Public Law 111–84 in all matters dealing with the report's methodology and matters to be reviewed and assessed.

No later than 90 days after receiving the Task Force's annual report, the Secretary of Defense shall submit to the Committees on Armed Services of the Senate and the House of Representatives the report and the Secretary's evaluation of the report.

No later than six months after receiving the Task Force's annual report, the Secretary of Defense, in consultation with the Secretaries of the Military departments, shall submit to the Committees on Armed Services of the Senate and the House of Representatives a plan to implement the recommendations of the Task Force's annual report.

Pursuant to section 724(c) of Public Law 111–84, the Task Force reports its independent findings, advice, and recommendations to the Secretary of Defense.

Pursuant to section 724(a)(3) of Public Law 111–84, the Secretary of Defense shall ensure that the Task Force's work is independent of the Senior Oversight Committee, as defined by section 726(c) of the Duncan Hunter National Defense Authorization Act for Fiscal Year 2009 (Pub. L. 110–417).

The Under Secretary of Defense (Personnel and Readiness) shall oversee the Task Force. The Director of Administration and Management, through the Washington Headquarters Services, shall provide support as deemed necessary for the performance of the Task Force's functions, and the Designated Federal Officer (DFO) shall ensure compliance with the requirements of FACA, the Government in the Sunshine Act of 1976 (5 U.S.C. 552b) (hereinafter referred to as ''the Government in the Sunshine Act''), governing Federal statutes and regulations, and established DoD policies/procedures.

The Task Force, pursuant to section 724(b) of Public Law 111–84, shall be comprised of not more than 14 members appointed by the Secretary of Defense with annual renewals.

Pursuant to section 724(b)(2) of Public Law 111–84, the Secretary of Defense shall appoint the following:

a. At least one member of each of the Regular Components of the Army, the Navy, the Air Force, and the Marine Corps;

b. One member of the National Guard;

c. One member of the Reserve Component of the Armed Forces other than the National Guard; and

d. A number of persons from outside the DoD equal to the total number of personnel from within the DoD (whether members of the Armed Forces or civilian personnel) who are appointed to the Task Force.

Pursuant to sections 724(b)(2) through (4) of Public Law 111–84, the Secretary of Defense shall appoint persons meeting the following requirements:

a. At least one individual appointed to the Task Force from within the DoD shall be the Surgeon General of an Armed Force.

b. At least one family member of a wounded, ill, or injured member of the Armed Forces or veteran who has experience working with wounded, ill, and injured members of the Armed Forces or their families.

c. The individuals appointed to the Task Force from outside the DoD—

i. With the concurrence of the Secretary of Veterans Affairs, shall include an officer or employee of the Department of Veterans Affairs; and

ii. May include individuals from other departments or agencies of the Federal Government, from State and local agencies, or from the private sector.

d. Persons appointed to the Task Force shall have experience in—

i. Medical care and coordination for wounded, ill, and injured members of the Armed Forces;

ii. Medical case management;

iii. Non-medical case management;

iv. The disability evaluation process for members of the Armed Forces;

v. Veterans benefits;

vi. Treatment of traumatic brain injury and post-traumatic stress disorder;

vii. Family support;

viii. Medical research;

ix. Vocational rehabilitation; or

x. Disability benefits.

There shall be two co-chairs of the Task Force. One of the co-chairs shall be designated by the Secretary of Defense at the time of appointment from among the individuals appointed to the Task Force from within the DoD. The other co-chair shall be selected from among the individuals appointed from outside the DoD by those individuals.

Pursuant to section 724(e)(1) of Public Law 111–84, Task Force members who are members of the Armed Forces or civilian officers or employees of the United States shall serve on the Task Force without compensation (other than compensation to which entitled as a member of the Armed Forces or an officer or employee of the United States, as the case may be).

Under the provisions of section 724(e)(1) of Public Law 111–84, Task Force members, who are not full-time or permanent part-time federal officers or employees, shall be appointed by the Secretary of Defense in accordance with, and subject to, the provisions of 5 U.S.C. 3161 and shall serve as special government employees and authorized to receive compensation.

All Task Force Members shall be renewed on an annual basis. The members shall also receive travel and per diem when traveling on official Task Force business.

Each Task Force member is appointed to provide advice on behalf of the government on the basis of his or her best judgment without representing any particular point of view and in a manner that is free from conflict of interest.

The Department, when necessary and consistent with the Task Force's mission and DoD policies/procedures, may establish subcommittees to support the Task Force. Establishment of subcommittees will be based upon a written determination, to include terms of reference, by the Secretary of Defense, the Deputy Secretary of Defense, or the Task Force's sponsor.

These Subcommittees shall not work independently of the chartered Task Force, and shall report all of their recommendations and advice solely to the Task Force for full deliberation and discussion. Subcommittees have no authority to make decisions and recommendations, verbally or in writing, on behalf of the chartered Task Force; nor can any Subcommittee or its members update or report directly to the DoD or any Federal officers or employees.

The Secretary of Defense shall appoint Subcommittee members even if the member in question is already a Task Force member with annual renewals.

Subcommittee members that are full-time or permanent part-time Federal officers or employees shall be appointed to serve as regular government employee members. Subcommittee members, if not full-time or permanent part-time government employees, shall be appointed to serve as experts and consultants under the authority of 5 U.S.C. 3109, and shall serve as special government employees, whose appointments must be renewed by the Secretary of Defense on an annual basis. With the exception of travel and per diem for official Task Force-related travel, Subcommittee members shall serve without compensation.

Each Subcommittee member is appointed to provide advice on behalf of the government on the basis of his or her best judgment without representing any particular point of view and in a manner that is free from conflict of interest.

All Subcommittees operate under the provisions of FACA, the Government in the Sunshine Act, governing Federal statutes and regulations, and governing DoD policies/procedures.

FOR FURTHER INFORMATION CONTACT: Marcia Moore, Deputy Advisory Committee Management Officer for the Department of Defense, 703–571–7057.

SUPPLEMENTARY INFORMATION: The Task Force shall meet at the call of the Task Force's Designated Federal Officer, in consultation with the Task Force co-chairs. The estimated number of Task Force meetings is five per year.

In addition, the Designated Federal Officer is required to be in attendance at all Task Force and subcommittee meetings for the entire duration of each and every meeting; however, in the absence of the Designated Federal Officer, a properly approved Alternate Designated Federal Officer shall attend the entire duration of the Task Force or subcommittee meeting.

The Designated Federal Officer, or the Alternate Designated Federal Officer, shall call all of the Task Force's and subcommittees' meetings; prepare and approve all meeting agendas; adjourn any meeting when the Designated Federal Officer, or the Alternate Designated Federal Officer, determines adjournment to be in the public interest or required by governing regulations or DoD policies/procedures; and chair meetings when directed to do so by the official to whom the Task Force reports.

Pursuant to 41 CFR 102–3.105(j) and 102–3.140, the public or interested organizations may submit written statements to Department of Defense Task Force on the Care, Management, and Transition of Recovering Wounded, Ill, and Injured Members of the Armed Forces membership about the Task Force's mission and functions. Written statements may be submitted at any time or in response to the stated agenda of planned meeting of Department of Defense Task Force on the Care, Management, and Transition of Recovering Wounded, Ill, and Injured Members of the Armed Forces.

All written statements shall be submitted to the Designated Federal Officer for the Department of Defense Task Force on the Care, Management, and Transition of Recovering Wounded, Ill, and Injured Members of the Armed Forces, and this individual will ensure that the written statements are provided to the membership for their consideration. Contact information for the Department of Defense Task Force on the Care, Management, and Transition of Recovering Wounded, Ill, and Injured Members of the Armed Force's Designated Federal Officer can be obtained from the GSA's FACA Database—*https://www.fido.gov/facadatabase/public.asp.*

The Designated Federal Officer, pursuant to 41 CFR 102–3.150, will announce planned meetings of the Department of Defense Task Force on the Care, Management, and Transition of Recovering Wounded, Ill, and Injured Members of the Armed Forces. The Designated Federal Officer, at that time, may provide additional guidance on the submission of written statements that are in response to the stated agenda for the planned meeting in question.

Dated: November 15, 2012.

Aaron Siegel,

Alternate OSD Federal Register Liaison Officer, Department of Defense.

[FR Doc. 2012–28140 Filed 11–19–12; 8:45 am]

BILLING CODE 5001–06–P

DEPARTMENT OF DEFENSE

Office of the Secretary

Science and Technology Reinvention Laboratory (STRL) Personnel Management Demonstration Projects

AGENCY: Office of the Deputy Assistant Secretary of Defense (Civilian Personnel Policy) (DASD (CPP)), Department of Defense (DoD).

ACTION: Notice of proposed amendment to demonstration project plans.

SUMMARY: Section 342(b) of the National Defense Authorization Act (NDAA) for Fiscal Year (FY) 1995, as amended by section 1009 of the NDAA for FY 2000 and section 1114 of the NDAA for FY 2001, authorizes the Secretary of Defense to conduct personnel demonstration projects at DoD laboratories designated as STRLs. This proposed amendment adds waivers to current STRL **Federal Register** Notices (FRN) for the Army Research Laboratory (ARL); the Army Aviation and Missile Research, Development, and Engineering Center (AMRDEC); the Army Engineer Research and Development Center (ERDC); the Army Medical Research and Materiel Command (MRMC); the Army Communications-Electronics Research, Development, and Engineering Center (CERDEC); and the Naval Research Laboratory (NRL) to facilitate the use of flexibilities in their project plans by permitting terminations during extended probationary periods.

DATES: This amendment may not be implemented until a 30-day comment period is provided, comments addressed, and a final **Federal Register** notice published. To be considered, written comments must be submitted on or before December 20, 2012. Authorities impacted by this FRN may not be applied retroactively and will be applied only to those personnel hired on/after the publication date of this FRN.

ADDRESSES: Send comments on or before the comment due date by mail to Mr. William T. Cole, Defense Civilian Personnel Advisory Services, Non-

Traditional Personnel Programs (DCPAS–NTPP), Suite 05L28, 4800 Mark Center Drive, Alexandria, VA 22350–1100; by email to *william.cole@cpms.osd.mil*; or by fax to 571–372–1559.

FOR FURTHER INFORMATION CONTACT:

Department of the Army:

- Army Research Laboratory (ARL): Program Manager, ARL Personnel Demonstration Project, AMSRD–ARL–O–HR, 2800 Powder Mill Road, Adelphi, MD 20793–1197;
- Aviation and Missile Research, Development, and Engineering Center (AMRDEC): Special Assistant for Laboratory Management, AMRDEC, 5400 Fowler Road, Redstone Arsenal, AL 35898–5000;
- Engineer Research and Development Center (ERDC): Personnel Demonstration Project Manager, U.S. Army Engineer Research and Development Center, 3909 Halls Ferry Road, Vicksburg, MS 39180–6199;
- Medical Research and Materiel Command (MRMC): Director, Civilian Personnel Advisory Center, Medical Research and Materiel Command, 1541 Porter Street, Fort Detrick, MD 21702–5000;
- Communications-Electronics Research, Development, and Engineering Center (CERDEC): CERDEC Personnel Demonstration Project Administrator, C4ISR Campus Building 6002, Room D3120, ATTN: RDER–DOS–ER, Aberdeen Proving Ground, MD 21005.

Department of the Navy:

- Naval Research Laboratory (NRL): Director, Strategic Workforce Planning, Naval Research Laboratory, 4555 Overlook Avenue SW., Washington, DC 20375–5320.

Department of Defense:

- Defense Civilian Personnel Advisory Services, Non-Traditional Personnel Programs (DCPAS–NTPP), Suite 05L28, 4800 Mark Center Drive, Alexandria, VA 22350–1100.

SUPPLEMENTARY INFORMATION:

A. Background

The conventional 1-year probationary period does not allow supervisors an adequate period of time to fully evaluate the contribution and conduct of newly hired personnel. STRLs have included flexibilities allowing up to a three year probationary period. These flexibilities were fully utilized until the United States Court of Appeals for the Federal Circuit decided two cases, *Van Wersch* v. *Department of Health & Human Services,* 197 F.3d 1144 (Fed. Cir. 1999), and *McCormick* v. *Department of the Air Force,* 307 F.3d 1339 (Fed. Cir. 2002), which affected the STRLs ability to fully utilize their extended probationary periods.

B. Modifications

The following FRNs are amended under the authority of section 1114 of the NDAA for Fiscal Year 2001:

1. U.S. Army Research Laboratory (ARL)

a. Add the following to section IX. Required Waivers to Law and Regulation: ''Chapter 75, sections 7501(1), 7511(a)(1)(A)(ii), and 7511(a)(1)(C)(ii); Adverse Actions—Definitions. Waived to the extent necessary to allow extended probationary periods and to permit termination during the extended probationary period without using adverse action procedures for those individuals serving a probationary period under an initial appointment except for those with veterans' preference.''

b. Add the following as the final paragraph to section IX. Required Waivers to Law and Regulation: ''Part 752, sections, 752.201, and 752.401: Principal statutory requirements and coverage. Waived to the extent necessary to allow extended probationary periods and to permit termination during the extended probationary period without using adverse action procedures for those individuals serving a probationary period under an initial appointment except those with veterans' preference.''

2. Army Aviation and Missile Research, Development and Engineering Center (AMRDEC)

a. Add the following to section IX. Required Waivers to Law and Regulation: ''Chapter 75, sections 7501(1), 7511(a)(1)(A)(ii), and 7511(a)(1)(C)(ii); Adverse Actions—Definitions. Waived to the extent necessary to allow extended probationary periods and to permit termination during the extended probationary period without using adverse action procedures for those individuals serving a probationary period under an initial appointment except for those with veterans' preference.''

b. Add the following as the final paragraph to section IX. Required Waivers to Law and Regulation: ''Part 752, sections, 752.201, and 752.401: Principal statutory requirements and coverage. Waived to the extent necessary to allow extended probationary periods and to permit termination during the extended probationary period without using adverse action procedures for those individuals serving a probationary period under an initial appointment except those with veterans' preference.''.

3. U.S. Army Engineer Research and Development Center (ERDC)

a. Add the following to section IX. Required Waivers to Law and Regulation: ''Chapter 75, sections 7501(1), 7511(a)(1)(A)(ii), and 7511(a)(1)(C)(ii); Adverse Actions—Definitions. Waived to the extent necessary to allow extended probationary periods and to permit termination during the extended probationary period without using adverse action procedures for those individuals serving a probationary period under an initial appointment except for those with veterans' preference.''

b. Add the following to section IX. Required Waivers to Law and Regulation: ''Part 752, sections, 752.201, and 752.401: Principal statutory requirements and coverage. Waived to the extent necessary to allow extended probationary periods and to permit termination during the extended probationary period without using adverse action procedures for those individuals serving a probationary period under an initial appointment except those with veterans' preference.''

4. U.S. Army Medical Research and Materiel Command (MRMC)

a. Add the following to section IX. Required Waivers to Law and Regulation: ''Chapter 75, sections 7501(1), 7511(a)(1)(A)(ii), and 7511(a)(1)(C)(ii); Adverse Actions—Definitions. Waived to the extent necessary to allow extended probationary periods and to permit termination during the extended probationary period without using adverse action procedures for those individuals serving a probationary period under an initial appointment except for those with veterans' preference.''

b. Add the following as the final paragraph to section IX. Required Waivers to Law and Regulation: ''Part 752, sections 752.201, and 752.401: Principal statutory requirements and coverage. Waived to the extent necessary to allow extended probationary periods and to permit termination during the extended probationary period without using adverse action procedures for those individuals serving a probationary

period under an initial appointment except those with veterans' preference.''

5. U.S. Army Communications—Electronics Research, Development and Engineering Center (CERDEC)

a. Add the following to section IX. Required Waivers to Law and Regulation: ''Chapter 75, sections 7501(1), 7511(a)(1)(A)(ii), and 7511(a)(1)(C)(ii); Adverse Actions—Definitions. Waived to the extent necessary to allow extended probationary periods and to permit termination during the extended probationary period without using adverse action procedures for those individuals serving a probationary period under an initial appointment except for those with veterans' preference.''

b. Add the following to section IX. Required Waivers to Law and Regulation: ''Part 752, sections 752.201, and 752.401: Principal statutory requirements and coverage. Waived to the extent necessary to allow extended probationary periods and to permit termination during the extended probationary period without using adverse action procedures for those individuals serving a probationary period under an initial appointment except those with veterans' preference.''

6. U.S. Naval Research Laboratory (NRL)

a. Add the following as the final box on the left side of Appendix A: Required Waivers to Law and Regulation chart: ''Chapter 75, sections 7501(1), 7511(a)(1)(A)(ii), and 7511(a)(1)(C)(ii); Adverse Actions—Definitions. Waived to the extent necessary to allow extended probationary periods and to permit termination during the extended probationary period without using adverse action procedures for those individuals serving a probationary period under an initial appointment except for those with veterans' preference.''

b. Add the following on the right side of the information entered in 6.a. above to Appendix A: Required Waivers to Law and Regulation chart: ''Part 752, sections, 752.201, and 752.401: Principal statutory requirements and coverage. Waived to the extent necessary to allow extended probationary periods and to permit termination during the extended probationary period without using adverse action procedures for those individuals serving a probationary period under an initial appointment except those with veterans' preference.''

Dated: October 31, 2012.

Aaron Siegel,

Alternate OSD Federal Register Liaison Officer, Department of Defense.

[FR Doc. 2012–26985 Filed 11–19–12; 8:45 am]

BILLING CODE 5001–06–P

DELAWARE RIVER BASIN COMMISSION

Notice of Commission Meeting and Public Hearing

Notice is hereby given that the Delaware River Basin Commission will hold an informal conference followed by a public hearing on Wednesday, December 5, 2012. The hearing will be part of the Commission's regularly scheduled business meeting. The conference session and business meeting both are open to the public and will be held at the Commission's office building located at 25 State Police Drive, West Trenton, New Jersey.

The morning conference session will begin at 11:00 a.m. and will include (a) a report by staff on the Commission's Information Technology (IT) Upgrade and Water Charging Program On-Line Reporting System; and (b) an update by a representative of the U.S. Army Corps of Engineers Philadelphia District on development of a Delaware Estuary Regional Sediment Management Plan.

Items for Public Hearing. The subjects of the public hearing to be held during the 1:30 p.m. business meeting on December 5, 2012 include draft dockets for which the names and brief descriptions will be posted on the Commission's Web site at *www.drbc.net* at least ten days prior to the meeting date. Complete draft dockets will be posted on the Web site ten days prior to the meeting date. Additional public records relating to the dockets may be examined at the Commission's offices. Please contact William Muszynski at 609–883–9500, extension 221, with any docket-related questions.

Other Agenda Items. In addition to the public hearing on draft dockets, the 1:30 p.m. business meeting will include public hearings on: (a) A resolution authorizing the Executive Director to engage an expert panel to advise the Water Quality Advisory Committee (WQAC) and the Commission on the development and use of a Delaware Estuary Eutrophication Model; (b) a resolution authorizing the Executive Director to award a professional contract for consulting services in connection with the Commission's Water Charging Program and Water Supply Storage Facilities Fund; and (c) a resolution authorizing the Executive Director to award a construction contract to the lowest responsible bidder for DRBC courtyard modifications associated with the Ruth Patrick River Garden and to amend the authorized amount of the Commission's contract with T&M Associates to include compensation for final design, preparation of bid documents and construction management. The Commissioners also may consider a Resolution to approve Docket D–1969–201 CP–13 for the Exelon Limerick Generating Station (''LGS draft docket''). A hearing on the LGS draft docket was conducted on August 28, 2012 and written comments were accepted through October 27, 2012. No additional testimony on this project will be accepted on December 5. In the event that the Commissioners are not yet prepared to consider the LGS draft docket during their meeting on December 5, they will consider a resolution to extend Docket D–1969–201 CP Final (Revision 12) for the LGS through December 31, 2013 or until the Commission approves the LGS draft docket, whichever occurs sooner. The business meeting agenda also will include the following standard items: adoption of the Minutes of the Commission's September 12, 2012 business meeting, announcements of upcoming meetings and events, a report on hydrologic conditions, reports by the Executive Director and the Commission's General Counsel, and a public dialogue session.

Opportunities to Comment. Individuals who wish to comment for the record on a hearing item or to address the Commissioners informally during the public dialogue portion of the meeting are asked to sign up in advance by contacting Ms. Paula Schmitt of the Commission staff, at *paula.schmitt@drbc.state.nj.us* or by phoning Ms. Schmitt at 609–883–9500 ext. 224. Written comment on items scheduled for hearing may be submitted in advance of the meeting date to: Commission Secretary, P.O. Box 7360, 25 State Police Drive, West Trenton, NJ 08628; by fax to Commission Secretary, DRBC at 609–883–9522 or by email to *paula.schmitt@drbc.state.nj.us*. Written comment on dockets should also be furnished directly to the Project Review Section at the above address or fax number or by email to *william.muszynski@drbc.state.nj.us*.

Individuals in need of an accommodation as provided for in the Americans with Disabilities Act who wish to attend the informational meeting, conference session or hearings should contact the Commission Secretary directly at 609–883–9500 ext. 203 or through the Telecommunications

Relay Services (TRS) at 711, to discuss how we can accommodate your needs.

Agenda Updates. Note that meeting items are subject to change and items scheduled for hearing are occasionally postponed to allow more time for the Commission to consider them. Please check the Commission's Web site, *www.drbc.net,* closer to the meeting date for changes that may be made after the deadline for filing this notice.

Dated: November 13, 2012.

Pamela M. Bush,

Commission Secretary.

[FR Doc. 2012–28150 Filed 11–19–12; 8:45 am]

BILLING CODE 6360–01–P

DEPARTMENT OF EDUCATION

[Docket No. ED–2012–ICCD–0052]

Agency Information Collection Activities; Comment Request; Educational Opportunity Centers Program (EOC) Annual Performance Report

AGENCY: Department of Education (ED), Office of Postsecondary Education (OPE).

ACTION: Notice.

SUMMARY: In accordance with the Paperwork Reduction Act of 1995 (44 U.S.C. chapter 3501 *et seq.*), ED is proposing an extension of an existing information collection.

DATES: Interested persons are invited to submit comments on or before January 22, 2013.

ADDRESSES: Comments submitted in response to this notice should be submitted electronically through the Federal eRulemaking Portal at *http://www.regulations.gov* by selecting Docket ID number ED–2012–ICCD–0052 or via postal mail, commercial delivery, or hand delivery. Please note that comments submitted by fax or email and those submitted after the comment period will not be accepted. Written requests for information or comments submitted by postal mail or delivery should be addressed to the Director of the Information Collection Clearance Division, U.S. Department of Education, 400 Maryland Avenue SW., LBJ, Room 2E117, Washington, DC 20202–4537.

FOR FURTHER INFORMATION CONTACT: Electronically mail *ICDocketMgr@ed.gov.* Please do not send comments here.

SUPPLEMENTARY INFORMATION: The Department of Education (ED), in accordance with the Paperwork Reduction Act of 1995 (PRA) (44 U.S.C. 3506(c)(2)(A)), provides the general public and Federal agencies with an opportunity to comment on proposed, revised, and continuing collections of information. This helps the Department assess the impact of its information collection requirements and minimize the public's reporting burden. It also helps the public understand the Department's information collection requirements and provide the requested data in the desired format. ED is soliciting comments on the proposed information collection request (ICR) that is described below. The Department of Education is especially interested in public comment addressing the following issues: (1) Is this collection necessary to the proper functions of the Department; (2) will this information be processed and used in a timely manner; (3) is the estimate of burden accurate; (4) how might the Department enhance the quality, utility, and clarity of the information to be collected; and (5) how might the Department minimize the burden of this collection on the respondents, including through the use of information technology. Please note that written comments received in response to this notice will be considered public records.

Title of Collection: Educational Opportunity Centers Program (EOC) Annual Performance Report.

OMB Control Number: Pending.

Type of Review: New collection; request for a new OMB Control Number.

Respondents/Affected Public: State, Local, or Tribal Governments.

Total Estimated Number of Annual Responses: 128.

Total Estimated Number of Annual Burden Hours: 1,024.

Abstract: Educational Opportunity Centers grantees must submit the report annually. The report provides the U.S. Department of Education with information needed to evaluate a grantee's performance and compliance with program requirements and to award prior experience points in accordance with the program regulations. The data collection is also aggregated to provide national information on project participants and program outcomes.

Dated: November 14, 2012.

Darrin A. King,

Director, Information Collection Clearance Division, Privacy, Information and Records Management Services, Office of Management.

[FR Doc. 2012–28204 Filed 11–19–12; 8:45 am]

BILLING CODE 4000–01–P

DEPARTMENT OF EDUCATION

Applications for New Awards; Model Demonstration Projects on Promoting Reentry Success Through Continuity of Educational Opportunities

AGENCY: Office of Vocational and Adult Education, Department of Education.

ACTION: Notice.

Overview Information

Model Demonstration Projects on Promoting Reentry Success through Continuity of Educational Opportunities (PRSCEO) Notice inviting applications for new awards for fiscal year (FY) 2013.

Catalog of Federal Domestic Assistance (CFDA) Number: 84.191C.

DATES: *Applications Available:* November 20, 2012.

Date of Pre-Application Meeting: December 10, 2012.

Deadline for Transmittal of Applications: December 26, 2012.

Full Text of Announcement

I. Funding Opportunity Description

Purpose of Program: The purpose of the PRSCEO program is to demonstrate the benefits of implementing a reentry education model, as described in the U.S. Department of Education (Department) November 2012 publication entitled ''A Reentry Education Model, Supporting Education and Career Advancement for Low-Skill Individuals in Corrections'' (Reentry Education Model).[1] This Reentry Education Model is focused on: (1) Supporting individuals, especially low-skilled adults, in their transition from correctional institutions [2] into the community by strengthening and aligning educational services [3] provided in those settings; (2) establishing a strong program infrastructure to support and improve education services in correctional institutions; (3) ensuring that education is well integrated into correctional institutions by making it a critical component of the intake and

[1] See *http://www2.ed.gov/about/offices/list/ovae/pi/AdultEd/reentry-model.pdf.*

[2] Throughout this notice the term ''correctional institution'' has the meaning as set forth in 20 U.S.C. 9225(d)(2) to include ''a prison; jail; reformatory; work farm; detention center; or halfway house, community-based rehabilitation center, or any other similar institution designed for the confinement or rehabilitation of criminal offenders.''

[3] Educational services may include, but are not limited to, assessment; instruction in reading, writing, and speaking the English language, numeracy, problem solving, and other literacy skills; career and technical education instruction; postsecondary education instruction; development of a student individual educational plan; and counseling services.

pre-release processes, and by aligning it with support and employment services; and (4) encouraging individuals in correctional institutions to identify and achieve education and career goals, recognizing that their education paths are not linear or uniform.

Background

More than 700,000 incarcerated individuals leave Federal and State prisons each year.[4] Too many of these individuals do not reintegrate successfully into society; within 3 years of release, 4 out of 10 prisoners will have committed new crimes or violated the terms of their release and will be reincarcerated.[5]

This negative cycle of release and return costs States more than $50 billion annually.[6] Moreover, the number of individuals cycling in and out of our Nation's prisons jeopardizes public safety and negatively affects those individuals' families and their communities. Approximately 2.7 million children have an incarcerated parent, and these children are more likely to be expelled or suspended from school than children without an incarcerated parent.[7]

Among the male U.S. population aged 20 to 34 without a high school credential, 1 in 3 black men, 1 in 8 white men, and 1 in 14 Hispanic men are incarcerated.[8] Formerly incarcerated men earn approximately 40 percent less per year than those who have never been incarcerated.[9] Unfortunately, many offenders are ill-equipped to break this cycle of reincarceration because they lack the education and workforce skills needed to succeed in the labor market and the cognitive skills (e.g., the ability to solve problems) needed to address the challenges of reentry.[10] In fact, approximately 41 percent of Federal and State prisoners lack a high school credential, compared to 18 percent of the general population. Even fewer have completed any college coursework.[11]

Although most State and Federal prisons offer adult education and career and technical education programs, and some offer postsecondary education, participation in these programs has not kept pace with the growing prison population.[12] Similarly, those under community supervision (parole or probation) often do not participate in education and training programs.[13] Possible reasons for these low participation rates include lack of or limited access to programs, limited awareness of program opportunities, reductions in services because of State budget constraints, insufficient personal motivation, and competing demands (e.g., employment) that may take precedence over pursuing education.[14] It is not surprising, therefore, that formerly incarcerated individuals cited education, job training, and employment as vital needs not generally met during incarceration or after release.[15]

Low-skilled individuals who move in and out of prison may not be able to access well-integrated and sequenced educational programs. Coordination and communication among educational programs and their partner related service providers, both inside and outside of correctional institutions, are essential to facilitating educational participation and progress. A lack of coordination and communication can result in such barriers as differing standardized assessments and curriculum and lack of articulation agreements, making student transfers from one program to another difficult. Other barriers to access to well-integrated and sequenced educational programs include:

- Misinterpretation of Federal and State privacy laws and insufficient links among data systems, making it difficult for programs to get a comprehensive picture of their students' backgrounds, avoid duplication of effort, and track outcomes.
- A perception among correctional officials (e.g., wardens, parole and probation officers, and court officials) and policymakers that individuals in the correctional institutions should not receive educational services; this, in turn, can make it difficult to require student participation and establish supportive education and reentry policies.
- Inadequate staff training, resulting in ineffective educational services.
- Limited funds, leading to long waiting lists for programs.

A growing body of evidence[16] shows that providing offenders with education and training programs increases their employment opportunities, decreases their cognitive deficits, and helps reduce the likelihood of recidivism.[17] More work is needed, however, to ensure that low-skilled individuals in correctional institutions have access to these services and can advance their education and employment prospects despite their correctional status.

For this purpose the Department supported the development of the Reentry Education Model, which illustrates an education continuum for bridging the gap between prison- and community-based education and training programs.[18] The goal of this

[4] Guerino, Paul, Paige M. Harrison, and William J. Sabol. 2011. *Prisoners in 2010.* NCJ 236096. Washington, DC: U.S. Department of Justice, Bureau of Justice Statistics. Accessed September 5, 2012, from *http://bjs.ojp.usdoj.gov/content/pub/pdf/p10.pdf.*

[5] The Pew Center on the States. 2011. *State of Recidivism: The Revolving Door of America's Prisons.* Washington, DC: The Pew Charitable Trusts. Accessed September 5, 2012, from *www.pewcenteronthestates.org/uploadedFiles/Pew_State_of_Recidivism.pdf.*

[6] National Association of State Budget Officers. 2011. *State Expenditure Report: Examining Fiscal 2009–2011 State Spending.* Washington, DC: Author. Accessed September 5, 2012, from *www.nasbo.org/sites/default/files/2010%20State%20Expenditure%20Report.pdf.*

[7] Phillips, Susan D., Alaattin Erkanli, Gordon P. Keeler, E. Jane Costello, & Adrian Angold. 2006. ''Disentangling the Risks: Parent Criminal Justice Involvement and Children's Exposure to Family Risks.'' *Criminology and Public Policy* 5(4): 677–702.

[8] The Pew Charitable Trusts. 2010. *Collateral Costs: Incarceration's Effect on Economic Mobility.* Washington, DC: Author. Accessed September 5, 2012, from *www.pewstates.org/uploadedFiles/PCS_Assets/2010/Collateral_Costs%281%29.pdf.*

[9] Gould, Eric D., Bruce A. Weinberg, and David B. Mustard. 2002. ''Crime Rates and Local Labor Market Opportunities in the United States: 1979–1997.'' *Review of Economics and Statistics* 84 (1): 45–61. Accessed September 5, 2012, from *www.terry.uga.edu/~mustard/labor.pdf.*

[10] MacKenzie, Doris Layton. 2012. ''The Effectiveness of Corrections-Based Work and Academic and Vocational Education Programs.'' In *The Oxford Handbook of Sentencing and Corrections,* edited by Joan Petersilia and Kevin R. Reitz, 492–520. New York: Oxford University Press.

[11] Harlow, Caroline Wolf. 2003. *Education and Correctional Populations.* NCJ 195670. Washington, DC: U.S. Department of Justice, Bureau of Justice Statistics. Accessed September 5, 2012, from *www.bjs.gov/content/pub/pdf/ecp.pdf.*

[12] Western, Bruce, Vincent Schiraldi, and Jason Ziedenberg. 2003. *Education & Incarceration.* Washington, DC: Justice Policy Institute. Accessed September 5, 2012, from *www.justicepolicy.org/images/upload/03-08_REP_EducationIncarceration_AC-BB.pdf.*

[13] Phillips, Susan D., Alaattin Erkanli, Gordon P. Keeler, E. Jane Costello, & Adrian Angold. 2006. ''Disentangling the Risks: Parent Criminal Justice Involvement and Children's Exposure to Family Risks.'' *Criminology and Public Policy* 5(4): 677–702.

[14] Crayton, Anna, and Suzanne Rebecca Neusteter. 2008. *The Current State of Correctional Education.* Paper prepared for the Reentry Roundtable on Education. New York: John Jay College of Criminal Justice, Prisoner Reentry Institute. Accessed September 5, 2012, from *www.jjay.cuny.edu/CraytonNeusteter_FinalPaper.pdf.*

[15] Visher, Christy A., and Pamela K. Lattimore. 2007. ''Major Study Examines Prisoners and Their Reentry Needs.'' *NIJ Journal* 258: 30–33. Accessed September 5, 2012, from *www.ncjrs.gov/pdffiles1/nij/219603g.pdf.*

[16] Aos, Steve, Marna Miller, and Elizabeth Drake. 2006. *Evidence-Based Adult Corrections Programs: What Works and What Does Not.* Olympia, WA: Washington State Institute for Public Policy. Accessed September 5, 2012, from *www.wsipp.wa.gov/rptfiles/06-01-1201.pdf.*

[17] MacKenzie, Doris Layton. 2006. *What Works in Corrections: Reducing the Criminal Activities of Offenders and Delinquents.* New York: Cambridge University Press.

[18] MPR Associates, Inc. 2011. *Community-based Correctional Education.* Washington, DC: U.S.

Continued

Reentry Education Model is to ensure that individuals can gain the knowledge and skills they need to obtain long-term, living-wage employment and can transition successfully out of correctional institutions to other adult basic education or adult secondary education programs, postsecondary education, training programs, occupational training settings, or employment. It is based on a review of research studies and feedback from a panel of experts, including practitioners, administrators, and researchers in the fields of corrections and education. The Reentry Education Model, in addition to illustrating how educational service components should connect [19] and be sequenced, includes detailed listings and discussions of the critical components of an educational continuum through the period of incarceration and reintegration.

Through this competition, which is carried out under part JJ of title I of the Omnibus Crime Control and Safe Streets Act of 1968, 42 U.S.C. 3797dd(a)(3), the Secretary of Education will support the establishment and operation of projects that will test and demonstrate the benefits of using the Reentry Education Model, including implementation of the Reentry Education Model infrastructure elements.[20] Grantees cannot effectively implement the Reentry Education Model without adequate infrastructure.[21] Grantees may appropriately build their program infrastructure as part of the funded project. Because of the challenges associated with implementing many infrastructure elements in a short period of time, the Secretary will award competitive preference, as described in the *Priorities* section in this notice, to applicants that have portions of the Reentry Education Model infrastructure elements already in place for ''strategic partnerships'' and the ''use of electronic data system.'' This will increase the likelihood that a grantee will promptly complete all infrastructure requirements and successfully demonstrate the effectiveness of the Reentry Education Model within the timeframe of the grant period.

Adult Education and Family Literacy Act (AEFLA)-funded eligible agencies,[22] providers,[23] or providers of adult education and literacy services using funds provided by an AEFLA-funded eligible agency or provider, are eligible for awards through this competition. AEFLA provides grants to States to provide adult education and literacy activities, including programs for individuals in correctional institutions (20 U.S.C. 9222(a)(1) and 20 U.S.C. 9225(b)). The Department intends to use National Leadership Activities funds under 20 U.S.C. 9253 to provide technical assistance support for PRSCEO program grantees and for an independent evaluation of the PRSCEO program.

Priorities: This notice includes two absolute priorities and two competitive preference priorities. We are establishing these priorities for the FY 2013 grant competition, and any subsequent year in which we make awards from the list of unfunded applicants from this competition, in accordance with section 437(d)(1) of the General Education Provisions Act (GEPA), 20 U.S.C. 1232(d)(1).

Absolute Priorities: Under 34 CFR 75.105(c)(3) we consider only applications that meet both of the absolute priorities.

Absolute Priority 1 is:

Model Demonstration Projects on Promoting Reentry Success Through Continuity of Educational Opportunities Based on the Reentry Education Model

To meet this priority, an applicant must—

(a) Propose a project that:

(1) Implements the Reentry Education Model, including all infrastructure elements, to promote education engagement and continuity for individuals during their reentry process spanning correctional institution settings and community settings; and

(2) Serves correctional institution residents (prisoners) and community correctional clients (e.g., parolees, probationers, or inmates in halfway house settings); and

(b) Implement a project plan (which must be included in the application) that:

(1) Identifies the partner entities described in paragraph (a)(3)(ii) of the *Application Requirements* section of this notice;

(2) Describes the process the applicant will use for developing an individual educational plan that addresses an individual student's needs; and

(3) Identifies formal tools of transition that the applicant will implement or has already implemented, including explicit interagency agreements that can facilitate the transition among educational programs and across correctional institution and community settings.

Absolute Priority 2 is:

Implementation of a Demonstration Program Based on the Reentry Education Model Using Adult Education and Family Literacy Act-Funded Programs

To meet this priority, an applicant must either be an AEFLA-funded eligible agency,[24] an AEFLA-funded eligible provider,[25] or a provider of adult education and literacy services with funds provided by an AEFLA-funded eligible agency or provider in the jurisdiction in which the services will be provided. Each applicant must submit a letter from the State agency administering AEFLA verifying that the applicant is an eligible agency or provider, or a provider of adult education and literacy services, as described in this priority, and has been an eligible agency or provider for at least one year prior to the submission of the application.

Competitive Preference Priorities

The Secretary is also establishing two competitive preference priorities for this competition. Under 34 CFR 75.105(c)(2)(i) the Department will award up to an additional five points for Competitive Preference Priority 1 and up to an additional five points for Competitive Preference Priority 2. The

Department of Education, Office of Vocational & Adult Education. Accessed September 5, 2012, from *http://www2.ed.gov/about/offices/list/ovae/pi/AdultEd/cbce-report-2011.pdf.*

[19] See the Reentry Education Model publication, figure 1, page 5.

[20] See Reentry Education Model publication, pages 10 through 13 for more information about the infrastructure elements.

[21] A panel of researchers and practitioners identified infrastructure elements on which to base the Reentry Education Model. These elements are derived from evidence that promising or proven strategies, when adopted by correctional institutions, would result in improved student outcomes for attaining educational achievement levels, completing their education programs, and attaining their educational goals. The combination of these infrastructure elements in a single model is the result of cross-disciplinary and creative work that is promising but needs to be tested and, depending on the results of that testing, modified.

[22] As defined in 20 U.S.C. 9202(4), the term ''eligible agency'' means ''the sole entity or agency in a State or an outlying area responsible for administering or supervising policy for adult education and literacy in the State or outlying area, respectively, consistent with the law of the State or outlying area, respectively.''

[23] As defined in 20 U.S.C. 9202(5), the term ''eligible provider'' means ''(A) a local educational agency; (B) a community-based organization of demonstrated effectiveness; (C) a volunteer literacy organization of demonstrated effectiveness; (D) an institution of higher education; (E) a public or private nonprofit agency; (F) a library; (G) a public housing authority; (H) a nonprofit institution that is not described in any of subparagraphs (A) through (G) and has the ability to provide literacy services to adults and families; and (I) a consortium of the agencies, organizations, institutions, libraries, or authorities described in any of subparagraphs (A) through (H).''

[24] See footnote 22 in the *Background* section for the definition of ''eligible agency''.

[25] See footnote 23 in the *Background* section for the definition of ''eligible provider''.

maximum amount of points that an applicant can receive under these competitive preference priorities is 10 points, depending on how well the application meets these priorities.

Competitive Preference Priority 1 is:

Demonstrated Existence of Program Infrastructure Elements Contained in the Reentry Education Model: Strategic Partnerships

To meet this priority, an applicant must provide evidence of prior implementation of the infrastructure element [26] ''strategic partnerships'' (at least one year prior to the date of application), which must include currently functioning agreements among partner entities as specified in the Reentry Education Model.

Competitive Preference Priority 2 is:

Demonstrated Existence of Program Infrastructure Elements Contained in the Reentry Education Model: Electronic Data System

To meet this priority, an applicant must provide evidence of the prior implementation (at least one year prior to date of application) of the infrastructure element,[27] ''electronic data system,'' which must include the capacity to capture student data, including educational level, educational goals, educational participation, and educational attainments. Such evidence may include samples of student record forms, redacted as appropriate to protect personally identifiable information or other data necessary to protect student privacy, procedural guidance, or other documentation demonstrating the availability of student data for individuals transitioning among program settings during the release process. In addition, the applicant must provide an assurance that the data are used to inform program improvement initiatives within the educational partner entities serving such students.

Requirements

Application Requirements

The project plan submitted within the application must include:

(a) A description of how the applicant will implement or already has implemented the Reentry Education Model. Specifically the application must include a description of the following:

(1) The elements of the proposed project, including:

(i) A correctional institution student intake protocol that includes assessment, individual educational plan development, and the recording of information in a centralized, electronic data system;

(ii) Educational services with appropriate alignment and content, including basic educational services for low-skilled adults, within correctional facilities and within community-based educational programs for reentering formerly incarcerated or otherwise sanctioned individuals;

(iii) Strategies describing proven successful or promising practices for:

(A) Improving student outcomes in the attainment of educational achievement levels,

(B) Increasing the number of students completing their educational programs, and

(C) Increasing the number of students attaining their educational goals; [28]

(iv) Pre-release procedures and protocols to support the transition of students, including low-skilled students, from correctional institution educational programs to community-based educational programs; and

(v) Intake processes and procedures for the community-based educational services that include—

(A) Connecting incarcerated individuals with community-based services by starting the services in the correctional institution,

(B) Timely transfer of student data and educational plans, which are updated as necessary and appropriate, and

(C) A process of communication among all partner entities and with the individual students, including a point person for tracking individual progress to the extent practicable and for tracking students transferring to other adult basic education or adult secondary education programs, postsecondary education, training programs, or occupational training programs.

(2) Reentry Education Model infrastructure elements that the applicant will implement or already has implemented, which must include:

(i) Monetary and other resources,

(ii) Strategic partnerships,

(iii) Electronic data system,

(iv) Staff training,

(v) Reentry policies, and

(vi) Evaluation processes.[29]

(3) Implementation components, including—

(i) The methodology that the applicant will use for selecting partner entities; [30]

(ii) Identification of the partner entities, which

(A) Must include—

(I) One or more community-based educational service providers, at least one of which must offer adult basic education services or English literacy programs, and

(II) One or more correctional institution education program sites, at least one of which must offer adult basic education services or English literacy programs; and

(B) May include—

(I) One or more community colleges, or technical colleges,

(II) One or more occupational training providers,

(III) One or more community correction facilities or organizations, and

(IV) One or more intermediary prisoner reentry service providers, such as providers of mentoring programs.

(iii) For each partner entity selected in paragraphs (a)(3)(ii)(A) and (a)(3)(ii)(B), descriptions of—

(A) The populations served by the partner entity; and

(B) The expected contributions of the partner entity to the proposed project and the extent to which each partner entity has committed to the implementation and sustainability of the project.

(iv) Strategies for identifying and allocating human resources among the partner entities as needed to implement the proposed project;

(v) The applicant's approach to initial and ongoing personnel development or training for personnel involved in implementing the proposed project; and

(4) Sustainability components, including a plan for:

(i) Assessing the responsibilities for project maintenance and support among the partner entities at the participating project sites by the end of the project period in order to continue services after the project period ends; and

(ii) Continuing personnel training among the partner entities in order to build capacity to implement the Reentry Education Model during the grant project period and to ensure that the project is sustained after the grant project period ends.

(b) A detailed timeline for implementing the proposed project.

(c) A plan for collecting data that will be submitted as required by the Department to the Department's

[26] See Reentry Education Model, pages 10 through 13 for more information about the infrastructure elements.

[27] See Reentry Education Model publication, pages 10 through 13 for more information about the infrastructure elements.

[28] See the *Performance Measures* section of this notice.

[29] See Reentry Education Model publication, pages 10 through 13 for more information about the infrastructure elements.

[30] A partner entity may be, but need not be, the applicant or a member of a consortium application.

technical assistance provider and the Department's independent evaluator,[31] in order to monitor the continuous progress of the applicant's program outcomes based on the Reentry Education Model. Such data, at a minimum, must include:

(1) The numbers of individuals who maintain educational participation while transitioning from and among correctional institutions, including to community correctional settings and other community-based educational programs; and

(2) The numbers of adults who acquire basic skills (including English language acquisition), complete secondary education, and transition to further education, training, or to work as indicated by attainment of educational functioning levels, attainment of high school credentials, enrollment in postsecondary education or training programs, and attainment of employment.

(d) A description of the project's logic model, consistent with the Reentry Education Model,[32] and a plan to collect data on the following system outputs:

(1) Changes to policies, procedures, or data collection systems, and

(2) Changes related to student information or record sharing, referrals for services, educational services, assessments, and transition planning.

(e) A proposed budget that includes estimates of the costs of:

(1) Implementing the proposed project, including but not limited to—

(i) Personnel, and

(ii) The various components of the proposed project; and

(2) Attendance of up to two attendees at a required one-and-one-half-day meeting in Washington, DC.

(f) A description of the applicant's formative evaluation plan, consistent with the proposed project's logic model, and consistent with the Reentry Education Model and student data collection plan, that:

(1) Includes information on how these data described in paragraph (c) will be reviewed by the project staff prior to finalizing data collection plans and again prior to submitting those data to the Department (consistent with the timeline in this section), and how they will be used during the course of the project to adjust the project or its implementation in order to enhance the project's outcomes, generalizability, and potential for sustainability; and

(2) Includes, as appropriate, periodic collection of student and system data in addition to other data relating to fidelity of implementation, stakeholder acceptability, and the types of facilities in which the services are provided (e.g., correctional institution, community center, library).

General Requirements

To meet the general requirements of this proposed competition, each applicant must propose to conduct the following activities:

(a) Commit to work with the Department's independent evaluator[33] to—

(1) Measure the fidelity of implementation of the Reentry Education Model; and

(2) Collect and assess the stakeholders' (e.g., service providers, teachers, case workers, program administrators, clients) feedback on the efficacy of the Reentry Education Model components, processes, and outcomes.

(b) Participate in program activities and collaborative efforts among grantees, Department staff, and the Department-identified technical assistance provider to disseminate Reentry Education Model information to such entities as adult education providers, correctional institutions, community-based organizations, community colleges, professional organizations, and other entities identified by the Department.

(c) Communicate and collaborate on an ongoing basis with Department-funded or other Department-designated projects in order to share information on successful strategies and challenges of the Reentry Education Model implementation across correctional and community settings.

(d) Maintain ongoing telephone and email communication with the Department project officer and the administrators of other projects funded under this competition.

(e) Submit data, when and as specified by the Department, to the independent evaluator designated by the Department in order to evaluate the Reentry Education Model.

Waiver of Proposed Rulemaking: Under the Administrative Procedure Act (5 U.S.C. 553), the Department generally offers interested parties the opportunity to comment on proposed requirements and priorities. Section 437(d)(1) of GEPA, however, allows the Secretary to exempt from rulemaking requirements regulations governing the first grant competition under a new or substantially revised program authority. This is the first grant competition for this program under part JJ of title I of the Omnibus Crime Control and Safe Streets Act of 1968, 42 U.S.C. 3797dd(a)(3) and therefore qualifies for this exemption. In order to ensure timely grant awards, the Secretary has decided to forgo public comment on the priorities and other requirements under section 437(d)(1) of GEPA. These priorities and other requirements will apply to the FY 2013 grant competition and any subsequent year in which we make awards from the list of unfunded applicants from this competition.

Program Authority: 42 U.S.C. 3797dd(a)(3).

Applicable Regulations: (a) The Education Department General Administrative Regulations (EDGAR) in 34 CFR parts 74, 75, 77, 79, 80, 81, 82, 84, 86, 97, 98, and 99. (b) The Education Department debarment and suspension regulations in 2 CFR part 3485.

Note: The regulations in 34 CFR parts 79 apply to all applicants except federally recognized Indian tribes.

Note: The regulations in 34 CFR part 86 apply to institutions of higher education only.

II. Award Information

Type of Award: Discretionary grants.

Estimated Available Funds: $924,036.

Estimated Range of Awards: $200,000 to $400,000.

Estimated Average Size of Award: $308,012.

Estimated Number of Awards: 2 to 4.

Note: The Department is not bound by any estimates in this notice.

Project Period: Up to 30 months. Applicants under this competition are required to provide detailed budget information for each year of the project and for the total grant.

III. Eligibility Information

1. *Eligible Applicants:* AEFLA-funded eligible agencies as defined by 20 U.S.C. 9202(4) and providers as defined by 20 U.S.C. 9202(5) and providers of adult education and literacy services with funds provided by an AEFLA-funded eligible agency or provider. Pursuant to 20 U.S.C. 9202(4) and 20 U.S.C. 9202(5), eligible) eligible AEFLA agencies and providers include the sole entity or

[31] For the purposes of reporting the data related to the grant program, the Department will identify the categories of student records to be submitted to the Department's independent evaluator for the PRSCEO program grantees. The Department's independent evaluator will, among other things, review numerical data indicating success or failure rates in terms of adult student participant outcomes including persistence, continued involvement in programs across settings, learning gains, credentials earned, and benefits of program participation.

[32] See the Reentry Education Model publication, figure 1, page 5.

[33] For the purposes of the assessment related to the grant program, the Department's independent evaluator will develop assessments and collect and analyze the data to ensure standardization of measurement across grant programs.

agency in a State or an outlying area responsible for administering or supervising policy for adult education and literacy in the State or outlying area, local educational agencies, community-based organizations of demonstrated effectiveness, volunteer literacy organizations of demonstrated effectiveness, institutions of higher education, public or private non-profit agencies, libraries, public housing authorities, nonprofit institutions that are not described above and have the ability to provide literacy services to adults and families; and consortia. Note that eligible applicants seeking to apply as a consortium must comply with the regulations in 34 CFR 75.127–75.129, which address group applications.

2. *Cost Sharing or Matching:* This program does not require cost sharing or matching.

IV. Application and Submission Information

1. *Address to Request Application Package:* You can obtain an application package via the Internet or from the Education Publications Center (ED Pubs), or from the program office.

To obtain a copy via the Internet, use the following address: *www.ed.gov/fund/grant/apply/grantapps/index.html.* To obtain a copy from ED Pubs, write, fax, or call the following: ED Pubs, U.S. Department of Education, P.O. Box 22207, Alexandria, VA 22304. Telephone, toll free: 1–877–433–7827. FAX: (703) 605–6794. If you use a telecommunications device for the deaf (TDD) or a text telephone (TTY), call, toll free: 1–877–576–7734.

You can contact ED Pubs at its Web site, also: *www.EDPubs.gov* or at its email address: *edpubs@inet.ed.gov.*

If you request an application package from ED Pubs, be sure to identify this program or competition as follows: CFDA number 84.191C.

To obtain a copy from the program office, contact the persons listed under **FOR FURTHER INFORMATION CONTACT** in section VII of this notice.

Individuals with disabilities can obtain a copy of the application package in an accessible format (e.g., braille, large print, audiotape, or compact disc) by contacting the person or team listed under *Accessible Format* in section VIII of this notice.

2. a. *Content and Form of Application Submission:* Requirements concerning the content of an application, together with the forms you must submit, are in the application package for this competition.

Page Limit: The application narrative (Part III of the application) is where you, the applicant, address the selection criteria that reviewers use to evaluate your application. You must limit the application narrative [Part III] to no more than 25 pages, using the following standards:

- A ''page'' is 8.5″ x 11″, on one side only, with 1″ margins at the top, bottom, and both sides.
- Double space (no more than three lines per vertical inch) all text in the application narrative, including titles, headings, footnotes, quotations, references, and captions, as well as all text in charts, tables, figures, and graphs.
- Use a font that is either 12 point or larger or no smaller than 10 pitch (characters per inch).
- Use one of the following fonts: Times New Roman, Courier, Courier New, or Arial. An application submitted in any other font (including Times Roman or Arial Narrow) will not be accepted.

The page limit does not apply to Part I, the cover sheet; Part II, the budget section, including the narrative budget justification; Part IV, the assurances and certifications; or the one-page abstract, the resumes, the bibliography, documentation for meeting priorities, or the letters of support. However, the page limit does apply to all of the application narrative section [Part III].

Our reviewers will not read any pages of your application that exceed the page limit.

b. *Submission of Proprietary Information:*

Given the types of projects that may be proposed in applications for the PRSCEO program, your application may include business information that the applicant considers proprietary. The Department's regulations define ''business information'' in 34 CFR 5.11.

Because we plan to make successful applications available to the public upon request, you may wish to request confidentiality of business information.

Consistent with Executive Order 12600, please designate in your application any information that you feel is exempt from disclosure under Exemption 4 of the Freedom of Information Act. In the appropriate Appendix section of your application, under ''Other Attachments Form,'' please list the page number or numbers on which we can find this information. For additional information please see 34 CFR 5.11(c).

3. *Submission Dates and Times:*

Applications Available: November 20, 2012.

Deadline for Transmittal of Applications: December 26, 2012.

Applications for grants under this competition must be submitted electronically using the Grants.gov Apply site. For information (including dates and times) about how to submit your application electronically, or in paper format by mail or hand delivery if you qualify for an exception to the electronic submission requirement, please refer to section IV. 7. *Other Submission Requirements* of this notice.

We do not consider an application that does not comply with the deadline requirements.

Individuals with disabilities who need an accommodation or auxiliary aid in connection with the application process should contact the persons listed under **FOR FURTHER INFORMATION CONTACT** in section VII of this notice. If the Department provides an accommodation or auxiliary aid to an individual with a disability in connection with the application process, the individual's application remains subject to all other requirements and limitations in this notice.

4. *Intergovernmental Review:* This program is subject to Executive Order 12372 and the regulations in 34 CFR part 79. Information about Intergovernmental Review of Federal Programs under Executive Order 12372 is in the application package for this program.

5. *Funding Restrictions:* We reference regulations outlining funding restrictions in the *Applicable Regulations* section of this notice.

6. *Data Universal Numbering System Number, Taxpayer Identification Number, and Central Contractor Registry:* To do business with the Department of Education, you must—

a. Have a Data Universal Numbering System (DUNS) number and a Taxpayer Identification Number (TIN);

b. Register both your DUNS number and TIN with the Central Contractor Registry (CCR), the Government's primary registrant database;

c. Provide your DUNS number and TIN on your application; and

d. Maintain an active CCR registration with current information while your application is under review by the Department and, if you are awarded a grant, during the project period.

You can obtain a DUNS number from Dun and Bradstreet. A DUNS number can be created within one business day.

If you are a corporate entity, agency, institution, or organization, you can obtain a TIN from the Internal Revenue Service. If you are an individual, you can obtain a TIN from the Internal Revenue Service or the Social Security Administration. If you need a new TIN, please allow 2–5 weeks for your TIN to become active. The CCR registration

process may take five or more business days to complete. If you are currently registered with the CCR, you may not need to make any changes. However, please make certain that the TIN associated with your DUNS number is correct. Also note that you will need to update your CCR registration on an annual basis. This may take three or more business days to complete.

In addition, if you are submitting your application via Grants.gov, you must (1) be designated by your organization as an Authorized Organization Representative (AOR); and (2) register yourself with Grants.gov as an AOR. Details on these steps are outlined at the following Grants.gov Web page: *www.grants.gov/applicants/get_registered.jsp.*

7. *Other Submission Requirements:* Applications for grants under this program must be submitted electronically unless you qualify for an exception to this requirement in accordance with the instructions in this section.

a. Electronic Submission of Applications.

Applications for grants under this competition must be submitted electronically using the Governmentwide Grants.gov Apply site at *www.Grants.gov.* Through this site, you will be able to download a copy of the application package, complete it offline, and then upload and submit your application. You may not email an electronic copy of a grant application to us.

We will reject your application if you submit it in paper format unless, as described elsewhere in this section, you qualify for one of the exceptions to the electronic submission requirement and submit, no later than two weeks before the application deadline date, a written statement to the Department that you qualify for one of these exceptions. Further information regarding calculation of the date that is two weeks before the application deadline date is provided later in this section under Exception to Electronic Submission Requirement.

You may access the electronic grant application for PRSCEO at *www.Grants.gov.* You must search for the downloadable application package for this program by the CFDA number. Do not include the CFDA number's alpha suffix in your search (e.g., search for 84.191, not 84.191C).

Please note the following:

- When you enter the Grants.gov site, you will find information about submitting an application electronically through the site, as well as the hours of operation.
- Applications received by Grants.gov are date and time stamped. Your application must be fully uploaded and submitted and must be date and time stamped by the Grants.gov system no later than 4:30:00 p.m., Washington, DC time, on the application deadline date. Except as otherwise noted in this section, we will not accept your application if it is received—that is, date and time stamped by the Grants.gov system—after 4:30:00 p.m., Washington, DC time, on the application deadline date. We do not consider an application that does not comply with the deadline requirements. When we retrieve your application from Grants.gov, we will notify you if we are rejecting your application because it was date and time stamped by the Grants.gov system after 4:30:00 p.m., Washington, DC time, on the application deadline date.
- The amount of time it can take to upload an application will vary depending on a variety of factors, including the size of the application and the speed of your Internet connection. Therefore, we strongly recommend that you do not wait until the application deadline date to begin the submission process through Grants.gov.
- You should review and follow the Education Submission Procedures for submitting an application through Grants.gov that are included in the application package for this competition to ensure that you submit your application in a timely manner to the Grants.gov system. You can also find the Education Submission Procedures pertaining to Grants.gov under News and Events on the Department's G5 system home page at *www.G5.gov.*
- You will not receive additional point value because you submit your application in electronic format, nor will we penalize you if you qualify for an exception to the electronic submission requirement, as described elsewhere in this section, and submit your application in paper format.
- You must submit all documents electronically, including all information you typically provide on the following forms: The Application for Federal Assistance (SF 424), the Department of Education Supplemental Information for SF 424, Budget Information—Non-Construction Programs (ED 524), and all necessary assurances and certifications.
- You must upload any narrative sections and all other attachments to your application as files in a PDF (Portable Document) read-only, non-modifiable format. Do not upload an interactive or fillable PDF file. If you upload a file type other than a read-only, non-modifiable PDF or submit a password-protected file, we will not review that material.
- Your electronic application must comply with any page-limit requirements described in this notice.
- After you electronically submit your application, you will receive from Grants.gov an automatic notification of receipt that contains a Grants.gov tracking number. (This notification indicates receipt by Grants.gov only, not receipt by the Department.) The Department then will retrieve your application from Grants.gov and send a second notification to you by email. This second notification indicates that the Department has received your application and has assigned your application a PR/Award number (an ED specified identifying number unique to your application).
- We may request that you provide us original signatures on forms at a later date.

Application Deadline Date Extension in Case of Technical Issues with the Grants.gov System: If you are experiencing problems submitting your application through Grants.gov, please contact the Grants.gov Support Desk, toll free, at 1–800–518–4726. You must obtain a Grants.gov Support Desk Case Number and must keep a record of it. If you are prevented from electronically submitting your application on the application deadline date because of technical problems with the Grants.gov system, we will grant you an extension until 4:30:00 p.m., Washington, DC time, the following business day to enable you to transmit your application electronically or by hand delivery. You also may mail your application by following the mailing instructions described elsewhere in this notice.

If you submit an application after 4:30:00 p.m., Washington, DC time, on the application deadline date, please contact the persons listed under **FOR FURTHER INFORMATION CONTACT** in section VII of this notice and provide an explanation of the technical problem you experienced with Grants.gov, along with the Grants.gov Support Desk Case Number. We will accept your application if we can confirm that a technical problem occurred with the Grants.gov system and that that problem affected your ability to submit your application by 4:30:00 p.m., Washington, DC time, on the application deadline date. The Department will contact you after a determination is made on whether your application will be accepted.

Note: The extensions to which we refer in this section apply only to the unavailability of, or technical problems with, the Grants.gov system. We will not grant you an extension

if you failed to fully register to submit your application to Grants.gov before the application deadline date and time or if the technical problem you experienced is unrelated to the Grants.gov system.

Exception to Electronic Submission Requirement: You qualify for an exception to the electronic submission requirement, and may submit your application in paper format, if you are unable to submit an application through the Grants.gov system because—

- You do not have access to the Internet; or
- You do not have the capacity to upload large documents to the Grants.gov system; and
- No later than two weeks before the application deadline date (14 calendar days or, if the fourteenth calendar day before the application deadline date falls on a Federal holiday, the next business day following the Federal holiday), you mail or fax a written statement to the Department, explaining which of the two grounds for an exception prevent you from using the Internet to submit your application.

If you mail your written statement to the Department, it must be postmarked no later than two weeks before the application deadline date. If you fax your written statement to the Department, we must receive the faxed statement no later than two weeks before the application deadline date.

Address and mail or fax your statement to: John Linton or Zina Watkins, U.S. Department of Education, 400 Maryland Avenue SW., Room 11021, Washington, DC 20202. FAX: (202) 245–7837.

Your paper application must be submitted in accordance with the mail or hand delivery instructions described in this notice.

b. Submission of Paper Applications by Mail

If you qualify for an exception to the electronic submission requirement, you may mail (through the U.S. Postal Service or a commercial carrier) your application to the Department. You must mail the original and two copies of your application, on or before the application deadline date, to the Department at the following address:

U.S. Department of Education,
Application Control Center,
Attention: (CFDA Number 84.191C),
LBJ Basement Level 1, 400 Maryland Avenue SW., Washington, DC 20202–4260.

You must show proof of mailing consisting of one of the following:

(1) A legibly dated U.S. Postal Service postmark.

(2) A legible mail receipt with the date of mailing stamped by the U.S. Postal Service.

(3) A dated shipping label, invoice, or receipt from a commercial carrier.

(4) Any other proof of mailing acceptable to the Secretary of the U.S. Department of Education.

If you mail your application through the U.S. Postal Service, we do not accept either of the following as proof of mailing:

(1) A private metered postmark.

(2) A mail receipt that is not dated by the U.S. Postal Service. If your application is postmarked after the application deadline date, we will not consider your application.

Note: The U.S. Postal Service does not uniformly provide a dated postmark. Before relying on this method, you should check with your local post office.

c. Submission of Paper Applications by Hand Delivery

If you qualify for an exception to the electronic submission requirement, you (or a courier service) may deliver your paper application to the Department by hand. You must deliver the original and two copies of your application by hand, on or before the application deadline date, to the Department at the following address:

U.S. Department of Education,
Application Control Center,
Attention: (CFDA Number 84.191C),
550 12th Street SW., Room 7041,
Potomac Center Plaza, Washington,
DC 20202–4260.

The Application Control Center accepts hand deliveries daily between 8:00 a.m. and 4:30:00 p.m., Washington, DC time, except Saturdays, Sundays, and Federal holidays.

Note for Mail or Hand Delivery of Paper Applications: If you mail or hand deliver your application to the Department:

(1) You must indicate on the envelope and—if not provided by the Department—in Item 11 of the SF 424 the CFDA number, including suffix letter, if any, of the competition under which you are submitting your application; and

(2) The Application Control Center will mail to you a notification of receipt of your grant application. If you do not receive this notification within 15 business days from the application deadline date, you should call the U.S. Department of Education Application Control Center at (202) 245–6288.

V. Application Review Information

1. Selection Criteria:

The selection criteria for this competition are from 34 CFR 75.210 and are listed in the following paragraphs. The maximum score for all the selection criteria is 90 points. The maximum score for each selection criterion is indicated in parentheses with the criterion. The selection criteria are as follows:

(1) *Significance* (up to 15 points).

(a) The Secretary considers the significance of the proposed project.

(b) In determining the significance of the proposed project, the Secretary considers—

(i) The extent to which the proposed project is likely to build local capacity to provide, improve, or expand services that address the needs of the target population; and

(ii) The extent to which the proposed project involves the development or demonstration of promising new strategies that build on, or are alternatives to, existing strategies.

(2) *Quality of the project design* (up to 20 points).

(a) The Secretary considers the quality of the design of the proposed project.

(b) In determining the quality of the design of the proposed project, the Secretary considers—

(i) The extent to which the goals, objectives, and outcomes to be achieved by the proposed project are clearly specified and measurable;

(ii) The extent to which the proposed development efforts include adequate quality controls and, as appropriate, repeated testing of products; and

(iii) The extent to which the proposed project will be coordinated with similar or related efforts, and with other appropriate community, State, and Federal resources.

(3) *Quality of project personnel* (up to 15 points).

(a) The Secretary considers the quality of the project personnel who will carry out the proposed project.

(b) In determining the quality of project personnel, the Secretary considers the extent to which the applicant encourages applications for employment from persons who are members of groups that have traditionally been underrepresented based on race, color, national origin, gender, age, or disability;

(c) In addition, the Secretary considers—

(i) The qualifications, including relevant training and experience, of the project director or principal investigator; and

(ii) The qualifications, including relevant training and experience, of key project personnel.

(4) *Adequacy of resources* (up to 15 points).

(a) The Secretary considers the adequacy of resources for the proposed project.

(b) In determining the adequacy of resources for the proposed project, the Secretary considers—

(i) The relevance and demonstrated commitment of each partner in the proposed project to the implementation and success of the project;

(ii) The extent to which the costs are reasonable in relation to the objectives, design, and potential significance of the proposed project; and

(iii) The potential for the incorporation of project purposes, activities, or benefits into the ongoing program of the agency or organization at the end of Federal funding.

(5) *Quality of the management plan* (up to 15 points).

(a) The Secretary considers the quality of the management plan for the proposed project.

(b) In determining the quality of the management plan for the proposed project, the Secretary considers—

(i) The adequacy of the management plan to achieve the objectives of the proposed project on time and within budget, including clearly defined responsibilities, timelines, and milestones for accomplishing project tasks;

(ii) The adequacy of procedures for ensuring feedback and continuous improvement in the operation of the proposed project; and

(iii) The extent to which the time commitments of the project director and principal investigator and other key project personnel are appropriate and adequate to meet the objectives of the proposed project.

(6) *Quality of the project evaluation* (up to 10 points).

(a) The Secretary considers the quality of the evaluation to be conducted of the proposed project.

(b) In determining the quality of the evaluation, the Secretary considers—

(i) The extent to which the methods of evaluation are thorough, feasible, and appropriate to the goals, objectives, and outcomes of the proposed project; and

(ii) The extent to which the methods of evaluation include the use of objective performance measures that are clearly related to the intended outcomes of the project and will produce quantitative and qualitative data to the extent possible.

2. *Review and Selection Process:* We remind potential applicants that in reviewing applications in any discretionary grant competition, the Secretary may consider, under 34 CFR 75.217(d)(3), the past performance of the applicant in carrying out a previous award, such as the applicant's use of funds, achievement of project objectives, and compliance with grant conditions. The Secretary may also consider whether the applicant failed to submit a timely performance report or submitted a report of unacceptable quality.

In addition, in making a competitive grant award, the Secretary also requires various assurances including those applicable to Federal civil rights laws that prohibit discrimination in programs or activities receiving Federal financial assistance from the Department of Education (34 CFR 100.4, 104.5, 106.4, 108.8, and 110.23).

3. *Special Conditions:* Under 34 CFR 74.14 and 80.12, the Secretary may impose special conditions on a grant if the applicant or grantee is not financially stable; has a history of unsatisfactory performance; has a financial or other management system that does not meet the standards in 34 CFR parts 74 or 80, as applicable; has not fulfilled the conditions of a prior grant; or is otherwise not responsible.

VI. Award Administration Information

1. *Award Notices:* If your application is successful, we notify your U.S. Representative and U.S. Senators and send you a Grant Award Notification (GAN); or we may send you an email containing a link to access an electronic version of your GAN. We may notify you informally, also.

If your application is not evaluated or not selected for funding, we notify you.

2. *Administrative and National Policy Requirements:* We identify administrative and national policy requirements in the application package and reference these and other requirements in the *Applicable Regulations* section of this notice.

We reference the regulations outlining the terms and conditions of an award in the *Applicable Regulations* section of this notice and include these and other specific conditions in the GAN. The GAN also incorporates your approved application as part of your binding commitments under the grant.

3. *Reporting:* (a) If you apply for a grant under this competition, you must ensure that you have in place the necessary processes and systems to comply with the reporting requirements in 2 CFR part 170 should you receive funding under the competition. This does not apply if you have an exception under 2 CFR 170.110(b).

(b) At the end of your project period, you must submit a final performance report, including financial information, as directed by the Secretary. If you receive a multi-year award, you must submit an annual performance report that provides the most current performance and financial expenditure information as directed by the Secretary under 34 CFR 75.118. The Secretary may also require more frequent performance reports under 34 CFR 75.720(c). For specific requirements on reporting, please go to *www.ed.gov/fund/grant/apply/appforms/appforms.html.*

4. *Performance Measures:* Under the Government Performance and Results Act, the Department has established goals and measures for the Adult Education and Family Literacy Act program. Although the PRSCEO program is not authorized by AEFLA, the Department has decided that it would be appropriate to align the AEFLA performance measures for PRSCEO program. One of the established goals of the AEFLA program is to support adult education systems that result in increased adult achievement in order to prepare adults, including individuals in correctional settings, for family, work, citizenship, and future learning. The AEFLA program provides adults with opportunities to acquire basic foundation skills (including English language acquisition), complete secondary education, and transition to further education and training and to work. There are four established measures for the AEFLA program that are applicable for adults in the PRSCEO program. These measures are—

(1) The percentage of adults enrolled in English literacy programs served by the PRSCEO program who acquire the level of English language skills needed to complete the levels of instruction in which they enrolled.

(2) The percentage of adults enrolled in adult basic education programs served by the PRSCEO program who acquire the level of basic skills needed to complete the level of instruction in which they enrolled.

(3) The percentage of all enrolled adults in the applicable population served by the PRSCEO program who pass all General Equivalency Diploma (GED) tests, or obtain secondary school diplomas.[34]

(4) The percentage of adults in the applicable population served by the PRSCEO program who enter postsecondary education or a training program.[35]

[34] The applicable population consists of all enrolled adults who take all GED tests, or are enrolled in adult high school at the high adult secondary education level, or are enrolled in the assessment phase of the External Development Program who exit during the program year.

[35] The applicable population consists of all adults who passed the GED tests or earned a secondary credential while enrolled in adult education, or have a secondary credential at entry, or are enrolled

Under the Government Performance and Results Act, the Department has established goals and measures for the recidivism of individuals who have been in correctional institutions. The measure related to recidivism is—

(5) The percentage of adults served by the PRSCEO program who, within one year of release, have criminal justice system involvement (arrest, re-conviction, violation of parole conditions, or return to incarceration) compared with the percentage of similarly situated individuals not served by the PRSCEO program.

Grantees will be responsible for providing data to support evaluation of these objectives.

VII. Agency Contact [Contacts]

FOR FURTHER INFORMATION CONTACT: John Linton, U.S. Department of Education, 400 Maryland Avenue SW., Room 11021, PCP, Washington, DC 20202. Telephone: (202) 245–6592 or by email: *John.Linton@ed.gov;* or Zina Watkins, U.S. Department of Education, 400 Maryland Avenue SW., Room 11020, PCP, Washington, DC 20202. Telephone: (202) 245–6197 or by email: *Zina.Watkins@ed.gov.*

If you use a TDD or TTY, call the FRS, toll free, at 1–800–877–8339.

VIII. Other Information

Accessible Format: Individuals with disabilities can obtain this document in an accessible format (e.g., braille, large print, audiotape, or compact disc) on request to the contact persons listed under **FOR FURTHER INFORMATION CONTACT** in section VII of this notice.

Electronic Access to This Document: The official version of this document is the document published in the **Federal Register**. Free Internet access to the official edition of the **Federal Register** and the Code of Federal Regulations is available via the Federal Digital System at: *www.gpo.gov/fdsys.* At this site you can view this document, as well as all other documents of this Department published in the **Federal Register,** in text or Adobe Portable Document Format (PDF). To use PDF you must have Adobe Acrobat Reader, which is available free at the site.

You may also access documents of the Department published in the **Federal Register** by using the article search feature at: *www.federalregister.gov*. Specifically, through the advanced search feature at this site, you can limit your search to documents published by the Department.

Dated: November 14, 2012.

Daniel J. Miller,

Executive Officer, Delegated Authority to Perform the Functions and Duties of the Assistant Secretary for Vocational and Adult Education.

[FR Doc. 2012–28068 Filed 11–19–12; 8:45 am]

BILLING CODE 4000–01–P

in a class specifically designed for transitioning to postsecondary education who exit during the program year. Entry into postsecondary education or training can occur any time from the time of exit through the end of the following program year. A transition class is a class that has a specific purpose to prepare students for entry into postsecondary education, training or an apprenticeship program.

DEPARTMENT OF ENERGY

Agency Information Collection Extension

AGENCY: U.S. Department of Energy.

ACTION: Submission for Office of Management and Budget (OMB) review; comment request.

SUMMARY: The Department of Energy (DOE) has submitted an information collection request to OMB for an extension under the provisions of the Paperwork Reduction Act of 1995. The information collection requests a three-year extension of its Chronic Beryllium Disease Prevention Program, OMB Control Number 1910–5112. This information collection request covers the information from DOE and DOE contractors that are subject to the Department's ''Chronic Beryllium Disease Prevention Program,'' title 10, Code of Federal Regulations, part 850 (10 C.F.R. pt. 850). The regulations contained in the Chronic Beryllium Disease Prevention Program have been promulgated under authority of the Atomic Energy Act of 1954 and the Department of Energy Organization Act.

DATES: Comments regarding this collection must be received on or before December 20, 2012. If you anticipate that you will be submitting comments, but find it difficult to do so within the period of time allowed by this notice, please advise the OMB Desk Officer of your intention to make a submission as soon as possible. The Desk Officer may be telephoned at (202) 395–4650.

ADDRESSES: Written comments should be sent to the DOE Desk Officer, Office of Information and Regulatory Affairs, Office of Management and Budget, New Executive Office Building, Room 10102, 735 17th Street NW., Washington, DC 20503, and to Jacqueline D. Rogers, U.S. Department of Energy; Office of Health, Safety and Security, HS–11; 1000 Independence Avenue SW., Washington, DC 20585, (202) 586–4714, by fax at 202–586–8548, or by email at: *jackie.rogers@hq.doe.gov*. Information about the collection instrument may be obtained at: *http://.hss.doe.gov/pra.html.*

FOR FURTHER INFORMATION CONTACT: Request for additional information should be directed to Jacqueline D. Rogers, U.S. Department of Energy; Office of Health, Safety and Security, HS–11; 1000 Independence Avenue SW., Washington, DC 20585, (202) 586–4714, by fax at 202–586–8548, or by email at *jackie.rogers@hq.doe.gov.*

SUPPLEMENTARY INFORMATION: This information collection request contains: *(1) Current OMB Control Number:* 1910–5112; *(2) Information Collection Request Title:* Chronic Beryllium Disease Prevention Program; *(3) Type of Review:* renewal; *(4) Purpose*: This collection provides the Department with the information needed to continue reducing the number of workers currently exposed to beryllium in the course of their work at DOE facilities managed by DOE or its contractors; minimize the levels and potential exposure to beryllium; to provide information to employees, to provide medical surveillance to ensure early detection of disease; and to permit oversight of the programs by DOE management; *(5) Annual Estimated Number of Respondents:* 4,499 (22 DOE sites and 4, 477 workers affected by the rule); *(6) Annual Estimated Total Burden Hours:* 25,036; (7) *Number of Collections:* The information collection request contains six information and/or recordkeeping requirements; (8) *Annual Estimated Reporting and Recordkeeping Cost Burden: $1,293,623;* (9) *Response Obligation: Mandatory.*

Statutory Authority: Atomic Energy Act of 1954, 42 U.S.C. 2201, and the Department of Energy Organization Act, 42 U.S.C. 7191 and 7254.

Issued in Washington, DC, on November 8, 2012.

Stephen A. Kirchhoff,

Director, Office of Resource Management, Office of Health, Safety and Security.

[FR Doc. 2012–28179 Filed 11–19–12; 8:45 am]

BILLING CODE 6450–01–P

DEPARTMENT OF ENERGY

International Energy Agency Meeting

AGENCY: Department of Energy.

ACTION: Notice of meeting.

SUMMARY: A meeting involving members of the Industry Advisory Board (IAB) to the International Energy Agency (IEA) in connection with the IEA's Emergency Disruption Simulation Exercise (ERE6) will be held on November 26–28, 2012,

at the headquarters of the IEA, 9, rue de la Fédération 75015 Paris, France, and in the UIC Building, 16 rue Jean Rey, 75015 Paris, France. The purpose of this notice is to permit participation in ERE6 by U.S. company members of the IAB.

DATES: November 26–28, 2012.

ADDRESSES: 9, rue de la Fédération, Paris, France and 16, rue Jean Rey, Paris.

FOR FURTHER INFORMATION CONTACT: Diana D. Clark, Assistant General for International and National Security Programs, Department of Energy, 1000 Independence Avenue SW., Washington, DC 20585, 202–586–3417.

SUPPLEMENTARY INFORMATION: In accordance with section 252(c)(1)(A)(i) of the Energy Policy and Conservation Act (42 U.S.C. 6272(c)(1)(A)(i)) (EPCA), the following notice of meeting is provided:

The ERE6 sessions will be held from 2:00 p.m.–5:30 p.m. on November 26, from 9:00 a.m.–5:30 p.m. on November 27, and from 9:00 a.m.–1:00 p.m. on November 28. The purpose of ERE6 is to train IEA Government delegates in the use of IEA emergency response procedures by reacting to a hypothetical oil supply disruption scenario.

The agenda for ERE6 is under the control of the IEA. ERE6 will involve break-out groups, the constitution of which is under the control of the IEA. The IEA anticipates that individual break-out groups will not include multiple IAB or IEA Reporting Company representatives that would qualify them as separate ''meetings'' within the meaning of the Voluntary Agreement and Plan of Action to Implement the International Energy Program. It is expected that the IEA will adopt the following agenda:

I. Training Session for New SEQ Participants and Selected IEA non-Member Countries
IEA Headquarters, 9, rue de la Fédération, 75015 Paris

November 26, 2012, beginning at 2:00 p.m.

1. Welcome to the IEA
2. IEA Emergency Response Policies, Market Assessment, Industry Perspective
3. IEA Oil Data Systems and Emergency Data Collection
4. Media Perspective
5. Introduction of ERE6 Disruption Simulation Exercise

II. Disruption Simulation Exercise
Union Internationale des Chemins de Fer, 16 rue Jean Rey, 75015 Paris

November 27–28, 2012, beginning each day at 9:00 a.m.

Day 1

1. Welcome and Introduction (plenary)
2. Simulation (breakout groups)
3. Discussion (plenary)
4. Simulation (breakout groups)
5. Discussion (pleanary)

Day 2

6. Introduction (plenary)
7. Simulation (breakout groups)
8. Discussion (plenary)
9. Simulation (breakout groups)
10. Conclusion and Wrap-up (plenary)

As provided in section 252(c)(1)(A)(ii) of the Energy Policy and Conservation Act (42 U.S.C. 6272(c)(1)(A)(ii)), the meeting of the IAB is open to representatives of members of the IAB and their counsel; representatives of members of the IEA's Standing Group on Emergency Questions (SEQ) and the IEA's Standing Group on the Oil Markets (SOM); representatives of the Departments of Energy, Justice, and State, the Federal Trade Commission, the General Accounting Office, Committees of Congress, the IEA, and the European Commission; and invitees of the IAB, the SEQ, the SOM, or the IEA.

Issued in Washington, DC, November 14, 2012.

Diana D. Clark,

Assistant General Counsel for International and National Security Programs.

[FR Doc. 2012–28178 Filed 11–19–12; 8:45 am]

BILLING CODE 6450–01–P

DEPARTMENT OF ENERGY

Federal Energy Regulatory Commission

[Docket No. IC12–17–000]

Commission Information Collection Activities (FERC–714); Comment Request

AGENCY: Federal Energy Regulatory Commission.

ACTION: Comment request.

SUMMARY: In compliance with the requirements of the Paperwork Reduction Act of 1995, 44 U.S.C. 3507(a)(1)(D), the Federal Energy Regulatory Commission (Commission or FERC) is submitting the information collection FERC–714 (Annual Electric Balancing Authority Area and Planning Area Report) to the Office of Management and Budget (OMB) for review of the information collection requirements. Any interested person may file comments directly with OMB and should address a copy of those comments to the Commission as explained below. The Commission issued a Notice in the **Federal Register** (77 FR 53878, 9/4/2012) requesting public comments. FERC received no comments on the FERC–714 and is making this notation in its submittal to OMB.

DATES: Comments on the collection of information are due by December 20, 2012.

ADDRESSES: Comments filed with OMB, identified by the OMB Control No. 1902–0140, should be sent via email to the Office of Information and Regulatory Affairs: *oira_submission@omb.gov*. Attention: Federal Energy Regulatory Commission Desk Officer. The Desk Officer may also be reached via telephone at 202–395–4718.

A copy of the comments should also be sent to the Federal Energy Regulatory Commission, identified by the Docket No. IC12–17–000, by either of the following methods:

- *eFiling at Commission's Web Site: http://www.ferc.gov/docs-filing/efiling.asp.*
- *Mail/Hand Delivery/Courier:* Federal Energy Regulatory Commission, Secretary of the Commission, 888 First Street NE., Washington, DC 20426.

Instructions: All submissions must be formatted and filed in accordance with submission guidelines at: *http://www.ferc.gov/help/submission-guide.asp*. For user assistance contact FERC Online Support by email at *ferconlinesupport@ferc.gov*, or by phone at: (866) 208–3676 (toll-free), or (202) 502–8659 for TTY.

Docket: Users interested in receiving automatic notification of activity in this docket or in viewing/downloading comments and issuances in this docket may do so at *http://www.ferc.gov/docs-filing/docs-filing.asp*.

FOR FURTHER INFORMATION CONTACT: Ellen Brown may be reached by email at *DataClearance@FERC.gov*, by telephone at (202) 502–8663, and by fax at (202) 273–0873.

SUPPLEMENTARY INFORMATION:

Title: FERC–714, Annual Electric Balancing Authority Area and Planning Area Report.

OMB Control No.: 1902–0140.

Type of Request: Three-year extension of the FERC–714 information collection requirements with no changes to the reporting requirements.

Abstract: The Federal Power Act authorizes the Commission to collect information from electric utility balancing authorities and planning areas in the United States. 18 CFR 141.51 mandates the data collection.

The Commission uses the collected data to analyze power system operations along with its regulatory functions. These analyses estimate the effect of changes in power system operations resulting from the installation of a new generating unit or plant, transmission facilities, energy transfers between systems, and/or new points of

interconnections. Also, these analyses serve to correlate rates and charges, assess reliability and other operating attributes in regulatory proceedings, monitor market trends and behaviors, and determine the competitive impacts of proposed mergers, acquisitions, and dispositions.

Type of Respondents: Electric utilities operating balancing authority areas and planning areas with annual peak demand over 200 MW.

Estimate of Annual Burden: [1] The Commission estimates the total Public Reporting Burden for this information collection as:

FERC–714 (IC12–17–000)—ANNUAL TRANSMISSION PLANNING AND EVALUATION REPORT

Number of respondents (A)	Number of responses per respondent (B)	Total number of responses (A) × (B) = (C)	Average burden hours per response (D)	Estimated total annual burden (C) × (D)
219	1	219	87	19,053

The total estimated annual cost burden to respondents is $2,995,016 [19,053 hours ÷ 2,080 [2] hours/year = 9.16009 * $143,540/year [3] = $1,314,839.32].

Comments: Comments are invited on: (1) Whether the collection of information is necessary for the proper performance of the functions of the Commission, including whether the information will have practical utility; (2) the accuracy of the agency's estimate of the burden and cost of the collection of information, including the validity of the methodology and assumptions used; (3) ways to enhance the quality, utility and clarity of the information collection; and (4) ways to minimize the burden of the collection of information on those who are to respond, including the use of automated collection techniques or other forms of information technology.

Dated: November 14, 2012.

Kimberly D. Bose,

Secretary.

[FR Doc. 2012–28152 Filed 11–19–12; 8:45 am]

BILLING CODE 6717–01–P

DEPARTMENT OF ENERGY

Federal Energy Regulatory Commission

[Docket No. IC12–16–000]

Commission Information Collection Activities (FERC–715); Comment Request

AGENCY: Federal Energy Regulatory Commission.

ACTION: Comment request.

SUMMARY: In compliance with the requirements of the Paperwork Reduction Act of 1995, 44 U.S.C. 3507(a)(1)(D), the Federal Energy Regulatory Commission (Commission or FERC) is submitting the information collection FERC–715 (Annual Transmission Planning and Evaluation Report) to the Office of Management and Budget (OMB) for review of the information collection requirements. Any interested person may file comments directly with OMB and should address a copy of those comments to the Commission as explained below. The Commission issued a Notice in the **Federal Register** (77 FR 53877, 9/4/2012) requesting public comments. FERC received no comments on the FERC–715 and is making this notation in its submittal to OMB.

DATES: Comments on the collection of information are due by December 20, 2012.

ADDRESSES: Comments filed with OMB, identified by the OMB Control No. 1902–0171, should be sent via email to the Office of Information and Regulatory Affairs: *oira_submission@omb.gov*. Attention: Federal Energy Regulatory Commission Desk Officer. The Desk Officer may also be reached via telephone at 202–395–4718.

A copy of the comments should also be sent to the Federal Energy Regulatory Commission, identified by the Docket No. IC12–16–000, by either of the following methods:

- *eFiling at Commission's Web Site: http://www.ferc.gov/docs-filing/efiling.asp.*
- *Mail/Hand Delivery/Courier:* Federal Energy Regulatory Commission, Secretary of the Commission, 888 First Street NE., Washington, DC 20426.

Instructions: All submissions must be formatted and filed in accordance with submission guidelines at: *http://www.ferc.gov/help/submission-guide.asp*. For user assistance contact FERC Online Support by email at *ferconlinesupport@ferc.gov*, or by phone at: (866) 208–3676 (toll-free), or (202) 502–8659 for TTY.

Docket: Users interested in receiving automatic notification of activity in this docket or in viewing/downloading comments and issuances in this docket may do so at *http://www.ferc.gov/docs-filing/docs-filing.asp.*

FOR FURTHER INFORMATION CONTACT: Ellen Brown may be reached by email at *DataClearance@FERC.gov*, by telephone at (202) 502–8663, and by fax at (202) 273–0873.

SUPPLEMENTARY INFORMATION:

Title: FERC–715, Annual Transmission Planning and Evaluation Report.

OMB Control No.: 1902–0171.

Type of Request: Three-year extension of the FERC–715 information collection requirements with no changes to the reporting requirements.

Abstract: Acting under FPA Section 213,[1] FERC requires each transmitting utility that operates integrated transmission system facilities rated above 100 kilovolts (kV) to submit annually:

- Contact information for the FERC–715;
- Base case power flow data (if it does not participate in the development and use of regional power flow data);
- Transmission system maps and diagrams used by the respondent for transmission planning;
- A detailed description of the transmission planning reliability criteria used to evaluate system performance for time frames and planning horizons used in regional and corporate planning;
- A detailed description of the respondent's transmission planning assessment practices (including, but not limited to, how reliability criteria are applied and the steps taken in

[1] Burden is defined as the total time, effort, or financial resources expended by persons to generate, maintain, retain, or disclose or provide information to or for a Federal agency. For further explanation of what is included in the information collection burden, reference 5 Code of Federal Regulations 1320.3.

[2] 2080 hours/year = 40 hours/week * 52 weeks/year.

[3] Average annual salary per employee in 2012.

[1] 16 U.S.C. 8241.

performing transmission planning studies); and

• A detailed evaluation of the respondent's anticipated system performance as measured against its stated reliability criteria using its stated assessment practices.

The FERC–715 enables the Commission to use the information as part of their regulatory oversight functions which includes:

• The review of rates and charges;
• The disposition of jurisdictional facilities;
• The consolidation and mergers;
• The adequacy of supply and;
• Reliability of nation's transmission grid

The FERC–715 enables the Commission to facilitate and resolve transmission disputes. Additionally, the Office of Electric Reliability (OER) uses the FERC–715 data to help protect and improve the reliability and security of the nation's bulk power system. OER oversees the development and review of mandatory reliability and security standards and ensures compliance with the approved standards by the users, owners, and operators of the bulk power system. OER also monitors and addresses issues concerning the nation's bulk power system including assessments of resource adequacy and reliability.

Without the FERC–715 data, the Commission would be unable to evaluate planned projects or requests related to transmission.

Type of Respondents: Integrated transmission system facilities rated at or above 100 kilovolts (kV).

Estimate of Annual Burden: [2] The Commission estimates the total Public Reporting Burden for this information collection as:

FERC–715 (IC12–16–000)—ANNUAL TRANSMISSION PLANNING AND EVALUATION REPORT

Number of respondents (A)	Number of responses per respondent (B)	Total number of responses (A) × (B) = (C)	Average burden hours per response (D)	Estimated total annual burden (C) × (D)
110	1	110	160	17,600

The total estimated annual cost burden to respondents is $2,995,016 [17,600 hours ÷ 2,080 [3] hours/year = 8.46153 * $143,540/year [4] = $1,214,569.23].

Comments: Comments are invited on: (1) Whether the collection of information is necessary for the proper performance of the functions of the Commission, including whether the information will have practical utility; (2) the accuracy of the agency's estimate of the burden and cost of the collection of information, including the validity of the methodology and assumptions used; (3) ways to enhance the quality, utility and clarity of the information collection; and (4) ways to minimize the burden of the collection of information on those who are to respond, including the use of automated collection techniques or other forms of information technology.

Dated: November 14, 2012.

Kimberly D. Bose,

Secretary.

[FR Doc. 2012–28153 Filed 11–19–12; 8:45 am]

BILLING CODE 6717–01–P

[2] Burden is defined as the total time, effort, or financial resources expended by persons to generate, maintain, retain, or disclose or provide information to or for a Federal agency. For further explanation of what is included in the information collection burden, reference 5 Code of Federal Regulations 1320.3.

[3] 2080 hours/year = 40 hours/week * 52 weeks/year.

[4] Average annual salary per employee in 2012.

DEPARTMENT OF ENERGY

Federal Energy Regulatory Commission

[Project No. 4815–010]

EWP LLC; Notice of Application for Amendment of Exemption and Soliciting Comments, Motions To Intervene, and Protests

Take notice that the following hydroelectric application has been filed with the Commission and is available for public inspection:

a. *Application Type:* Amendment of Exemption.

b. *Project No.:* P–4815–010.

c. *Date Filed:* October 3, 2012.

d. *Applicant:* EWP LLC.

e. *Name of Project:* Eury Dam Project.

f. *Location:* The existing project is located on the Little River in Montgomery County, North Carolina. The project does not affect federal lands.

g. *Filed Pursuant to:* Federal Power Act, 16 U.S.C. 791(a)–825(r).

h. *Applicant Contact:* J. Scott Hale, Manager, EWP LLC, 125 South Elm Street, Suite 400, Greensboro, North Carolina 27401; Telephone: (336) 272–3706.

i. *FERC Contact:* Any questions on this notice should be addressed to Kim Carter, Telephone (202) 502–6486 or *Kim.Carter@ferc.gov.*

j. *Deadline for filing comments, motions to intervene, and protests:* December 20, 2012.

Comments, protests, and interventions may be filed electronically via the Internet in lieu of paper. See 18 CFR 385.2001(a)(1)(iii) and the instructions on the Commission's Web site (*http://www.ferc.gov/docs-filing/efiling.asp*). Commenters can submit brief comments up to 6,000 characters, without prior registration, using the eComment system (*http://www.ferc.gov/docs-filing/ecomment.asp)* and must include name and contact information at the end of comments. The Commission strongly encourages electronic filings.

All documents (original and seven copies) filed by paper should be sent to: Secretary, Federal Energy Regulatory Commission, 888 First Street NE., Washington, DC 20426. Please include the project number (P–4815–010) on any comments or motions filed.

The Commission's Rules of Practice and Procedure require all interveners filing documents with the Commission to serve a copy of that document on each person whose name appears on the official service list for the project. Further, if an intervener files comments or documents with the Commission relating to the merits of an issue that may affect the responsibilities of a particular resource agency, they must also serve a copy of the document on that resource agency. A copy of any motion to intervene must also be served upon each representative of the

Applicant specified in the particular application.

k. *Description of Application:* The exemptee proposes to replace two 400-kW existing submersible generating units with two Leffel Francis type generating units rated at 156 kW and 636 kW. In addition, the exemptee proposes to rebuild the existing trash racks, repair and install draft tubes, install new switch gear and new control system to ensure accurate pond level control, optimal load sharing and unit switching with minimal downtime.

l. *Locations of the Application:* A copy of the application is available for inspection and reproduction at the Commission's Public Reference Room, located at 888 First Street NE., Room 2A, Washington, DC 20426, or by calling (202) 502–8371. This filing may also be viewed on the Commission's Web site using the ''eLibrary'' link at *http://elibrary.ferc.gov/idmws/search/fercgensearch.asp.* Enter the docket number excluding the last three digits (P–4815) in the docket number field to access the document. You may also register online at *http://www.ferc.gov/docs-filing/esubscription.asp* to be notified via email of new filings and issuances related to this or other pending projects. For assistance, call 1–866–208–3676 or email *FERCOnlineSupport@ferc.gov,* for TTY, call (202) 502–8659. A copy is also available for inspection and reproduction at the address in item (h) above.

m. Individuals desiring to be included on the Commission's mailing list should so indicate by writing to the Secretary of the Commission.

n. *Comments, Protests, or Motions to Intervene:* Anyone may submit comments, a protest, or a motion to intervene in accordance with the requirements of Rules of Practice and Procedure, 18 CFR 385.210, .211, .214. In determining the appropriate action to take, the Commission will consider all protests or other comments filed, but only those who file a motion to intervene in accordance with the Commission's Rules may become a party to the proceeding. Any comments, protests, or motions to intervene must be received on or before the specified comment date for the particular application.

o. Any filings must bear in all capital letters the title ''COMMENTS'', ''PROTEST'', or ''MOTION TO INTERVENE'', as applicable, and the Project Number of the particular application to which the filing refers.

p. *Agency Comments:* Federal, state, and local agencies are invited to file comments on the described application. A copy of the application may be obtained by agencies directly from the Applicant. If an agency does not file comments within the time specified for filing comments, it will be presumed to have no comments. One copy of an agency's comments must also be sent to the Applicant's representatives.

Dated: November 14, 2012.

Kimberly D. Bose,

Secretary.

[FR Doc. 2012–28151 Filed 11–19–12; 8:45 am]

BILLING CODE 6717–01–P

DEPARTMENT OF ENERGY

Federal Energy Regulatory Commission

Combined Notice of Filings

Take notice that the Commission has received the following Natural Gas Pipeline Rate and Refund Report filings:

Filings Instituting Proceedings

Docket Numbers: RP12–91–000.
Applicants: Transcontinental Gas Pipe Line Company.
Description: 2012 Penalty Sharing Report.
Filed Date: 11/9/12.
Accession Number: 20121109–5043.
Comments Due: 5 p.m. ET 11/21/12.

Docket Numbers: RP13–268–000.
Applicants: Natural Gas Pipeline Company of America.
Description: Amendment Filing—Tenaska Negotiated Rate Agreement to be effective 11/9/2012.
Filed Date: 11/9/12.
Accession Number: 20121109–5073.
Comments Due: 5 p.m. ET 11/21/12.

Docket Numbers: RP13–269–000.
Applicants: Natural Gas Pipeline Company of America.
Description: Amendment Filing—Tenaska Negotiated Rate Agreement to be effective 11/9/2012.
Filed Date: 11/9/12.
Accession Number: 20121109–5075.
Comments Due: 5 p.m. ET 11/21/12.

Docket Numbers: RP13–270–000.
Applicants: Midwestern Gas Transmission Company.
Description: Non-Conforming Agreement—Total to be effective 11/1/2012.
Filed Date: 11/9/12.
Accession Number: 20121109–5122.
Comments Due: 5 p.m. ET 11/21/12.

Docket Numbers: RP13–271–000.
Applicants: Granite State Gas Transmission, Inc.
Description: Sixth Revised Volume 1 to be effective 12/10/2012.
Filed Date: 11/9/12.
Accession Number: 20121109–5175.
Comments Due: 5 p.m. ET 11/21/12.

Docket Numbers: RP13–272–000.
Applicants: Southern Natural Gas Company, L.L.C.
Description: Gas Quality Correction to be effective 11/1/2012.
Filed Date: 11/9/12.
Accession Number: 20121109–5177.
Comments Due: 5 p.m. ET 11/21/12.

Docket Numbers: RP13–273–000.
Applicants: Southern Natural Gas Company, L.L.C.
Description: South of Toca Facilities Sale to be effective 11/1/2012.
Filed Date: 11/9/12.
Accession Number: 20121109–5178.
Comments Due: 5 p.m. ET 11/21/12.

Docket Numbers: RP13–274–000.
Applicants: Gulf Crossing Pipeline Company LLC.
Description: Amendment to Neg Rate Agmt (JP Morgan 156–3) to be effective 11/10/2012.
Filed Date: 11/13/12.
Accession Number: 20121113–5017.
Comments Due: 5 p.m. ET 11/26/12.

Any person desiring to intervene or protest in any of the above proceedings must file in accordance with Rules 211 and 214 of the Commission's Regulations (18 CFR 385.211 and 385.214) on or before 5:00 p.m. Eastern time on the specified comment date. Protests may be considered, but intervention is necessary to become a party to the proceeding.

Filings in Existing Proceedings

Docket Numbers: RP12–1121–002.
Applicants: Portland General Electric Company.
Description: Order 587–V Compliance Filing Second Corrected Section 25 to be effective 12/1/2012.
Filed Date: 11/9/12.
Accession Number: 20121109–5085.
Comments Due: 5 p.m. ET 11/16/12.

Any person desiring to protest in any the above proceedings must file in accordance with Rule 211 of the Commission's Regulations (18 CFR § 385.211) on or before 5:00 p.m. Eastern time on the specified comment date.

The filings are accessible in the Commission's eLibrary system by clicking on the links or querying the docket number.

eFiling is encouraged. More detailed information relating to filing requirements, interventions, protests, and service can be found at: *http://www.ferc.gov/docs-filing/efiling/filing-req.pdf.* For other information, call (866) 208–3676 (toll free). For TTY, call (202) 502–8659.

Dated: November 13, 2012.

Nathaniel J. Davis, Sr.,

Deputy Secretary.

[FR Doc. 2012–28125 Filed 11–19–12; 8:45 am]

BILLING CODE 6717–01–P

DEPARTMENT OF ENERGY

Federal Energy Regulatory Commission

Combined Notice of Filings #1

Take notice that the Commission received the following electric corporate filings:

Docket Numbers: EC13–36–000.

Applicants: Shiloh IV Wind Project, LLC, Shiloh IV Lessee, LLC.

Description: Application for Approval under Section 203 of the Federal Power Act and Requests for Expedited Consideration and Confidential Treatment of Shiloh IV Wind Project, LLC and Shiloh IV Lessee, LLC.

Filed Date: 11/9/12.

Accession Number: 20121109–5237.

Comments Due: 5 p.m. ET 11/30/12.

Take notice that the Commission received the following electric rate filings:

Docket Numbers: ER11–2664–004.

Applicants: Powerex Corp.

Description: Powerex Corp. submits update of plans to file with British Columbia Utilities Commission.

Filed Date: 11/9/12.

Accession Number: 20121109–5136.

Comments Due: 5 p.m. ET 11/30/12.

Docket Numbers: ER12–2471–001.

Applicants: Midwest Independent Transmission System Operator, Inc.

Description: SA 2465 Rock Aetna Power Partners G621 to be effective 8/18/2012.

Filed Date: 11/9/12.

Accession Number: 20121109–5170.

Comments Due: 5 p.m. ET 11/30/12.

Docket Numbers: ER12–2642–003.

Applicants: North Eastern States, Inc.

Description: Baseline Amendment Filing to be effective 12/2/2012.

Filed Date: 11/9/12.

Accession Number: 20121109–5172.

Comments Due: 5 p.m. ET 11/30/12.

Docket Numbers: ER13–33–001.

Applicants: Collegiate Clean Energy, LLC.

Description: Market-Based Rate Tariff to be effective 11/5/2012.

Filed Date: 11/9/12.

Accession Number: 20121109–5165.

Comments Due: 5 p.m. ET 11/30/12.

Docket Numbers: ER13–347–000.

Applicants: PJM Interconnection, L.L.C.

Description: Revisions to the OATT & OA re Residual Zonal Pricing to be effective 1/8/2013.

Filed Date: 11/9/12.

Accession Number: 20121109–5146.

Comments Due: 5 p.m. ET 11/30/12.

Docket Numbers: ER13–348–000.

Applicants: NSTAR Electric Company.

Description: Revision to NSTAR Electric MBR Tariff to be effective 11/10/2012.

Filed Date: 11/9/12.

Accession Number: 20121109–5149.

Comments Due: 5 p.m. ET 11/30/12.

Docket Numbers: ER13–349–000.

Applicants: PJM Interconnection, L.L.C.

Description: Revisions to the PJM OA Schedule 12 to remove City Power Marketing as PJM Member to be effective 12/31/9998.

Filed Date: 11/9/12.

Accession Number: 20121109–5162.

Comments Due: 5 p.m. ET 11/30/12.

Docket Numbers: ER13–350–000.

Applicants: SWG Colorado, LLC.

Description: Rate Schedules for Emergency Power to be effective 11/10/2012.

Filed Date: 11/9/12.

Accession Number: 20121109–5163.

Comments Due: 5 p.m. ET 11/30/12.

Docket Numbers: ER13–351–000.

Applicants: AES Huntington Beach, L.L.C.

Description: RMR Agreement between AES Huntington Beach, L.L.C. and ISO to be effective 11/9/2012.

Filed Date: 11/9/12.

Accession Number: 20121109–5166.

Comments Due: 5 p.m. ET 11/28/12.

Docket Numbers: ER13–352–000.

Applicants: Powerex Corp.

Description: Category Seller Change to be effective 11/2/2012.

Filed Date: 11/9/12.

Accession Number: 20121109–5167

Comments Due: 5 p.m. ET 11/30/12.

Take notice that the Commission received the following qualifying facility filings:

Docket Numbers: QF13–78–000.

Applicants: Kyocera America, Inc.

Description: Form 556 of Kyocera America, Inc.

Filed Date: 11/13/12.

Accession Number: 20121113–5086.

Comments Due: None Applicable.

The filings are accessible in the Commission's eLibrary system by clicking on the links or querying the docket number.

Any person desiring to intervene or protest in any of the above proceedings must file in accordance with Rules 211 and 214 of the Commission's Regulations (18 CFR 385.211 and 385.214) on or before 5:00 p.m. Eastern time on the specified comment date. Protests may be considered, but intervention is necessary to become a party to the proceeding.

eFiling is encouraged. More detailed information relating to filing requirements, interventions, protests, service, and qualifying facilities filings can be found at: *http://www.ferc.gov/docs-filing/efiling/filing-req.pdf.* For other information, call (866) 208–3676 (toll free). For TTY, call (202) 502–8659.

Dated: November 13, 2012.

Nathaniel J. Davis, Sr.,

Deputy Secretary.

[FR Doc. 2012–28139 Filed 11–19–12; 8:45 am]

BILLING CODE 6717–01–P

DEPARTMENT OF ENERGY

Federal Energy Regulatory Commission

Notice of Effectiveness of Exempt Wholesale Generator Status

	Docket Nos.
NRG Solar Borrego I LLC	EG12–96–000
Energy Alternatives Wholesale, LLC.	EG12–97–000
Brookfield Smoky Mountain Hydropower LLC.	EG12–98–000
Horse Butte Wind I LLC	EG12–99–000
Ri- Corp. Development, Inc	EG12–100–000
Anacacho Wind Farm, LLC	EG12–101–000
Brandon Shores LLC	EG12–102–000
H.A. Wagner LLC	EG12–103–000
C.P. Crane LLC	EG12–104–000
GenOn Marsh Landing, LLC.	EG12–105–000
Limon Wind, LLC	EG12–106–000
Limon Wind II, LLC	EG12–107–000

Take notice that during the month of October 2012, the status of the above-captioned entities as Exempt Wholesale Generators became effective by operation of the Commission's regulations. 18 CFR 366.7(a).

Dated: November 14, 2012.

Kimberly D. Bose,

Secretary.

[FR Doc. 2012–28154 Filed 11–19–12; 8:45 am]

BILLING CODE 6717–01–P

DEPARTMENT OF ENERGY

Federal Energy Regulatory Commission

[Docket No. EL13–19–000]

Dairyland Power Cooperative; Notice of Petition for Declaratory Order

Take notice that on November 9, 2012, pursuant to section 207(a)(2) of the Federal Energy Regulatory Commission's (Commission) Rules of Practice and Procedure 18 CFR

385.207(a)(2), Dairyland Power Cooperative (Dairyland) filed a petition for declaratory order requesting that the Commission grant the proposed transmission rate incentives in connection with the participation of Dairyland in the regional planning initiative known as the Capacity Expansion by the Year 2020, as more fully explained in its petition.

Any person desiring to intervene or to protest this filing must file in accordance with Rules 211 and 214 of the Commission's Rules of Practice and Procedure (18 CFR 385.211, 385.214). Protests will be considered by the Commission in determining the appropriate action to be taken, but will not serve to make protestants parties to the proceeding. Any person wishing to become a party must file a notice of intervention or motion to intervene, as appropriate. Such notices, motions, or protests must be filed on or before the comment date. On or before the comment date, it is not necessary to serve motions to intervene or protests on persons other than the Applicant.

The Commission encourages electronic submission of protests and interventions in lieu of paper using the ''eFiling'' link at *http://www.ferc.gov.* Persons unable to file electronically should submit an original and 14 copies of the protest or intervention to the Federal Energy Regulatory Commission, 888 First Street NE., Washington, DC 20426.

This filing is accessible on-line at *http://www.ferc.gov*, using the ''eLibrary'' link and is available for review in the Commission's Public Reference Room in Washington, DC. There is an ''eSubscription'' link on the Web site that enables subscribers to receive email notification when a document is added to a subscribed docket(s). For assistance with any FERC Online service, please email *FERCOnlineSupport@ferc.gov*, or call (866) 208–3676 (toll free). For TTY, call (202) 502–8659.

Comment Date: 5:00 p.m. Eastern Time on December 10, 2012.

Dated: November 14, 2012.

Kimberly D. Bose,

Secretary.

[FR Doc. 2012–28155 Filed 11–19–12; 8:45 am]

BILLING CODE 6717–01–P

DEPARTMENT OF ENERGY

Western Area Power Administration

Draft Recommendations of Joint Outreach Team

AGENCY: Western Area Power Administration, DOE.

ACTION: Notice of Availability of draft recommendations of Western/DOE Joint Outreach Team.

SUMMARY: The Western Area Power Administration (Western), a power marketing administration (PMA) of the Department of Energy (DOE), is publishing the draft recommendations of the Western/DOE Joint Outreach Team (JOT) for review and comment by Western's customers, Tribes, stakeholders, and the public at large.

DATES: To ensure consideration, all comments should be received by Western at the address below on or before 4 p.m. MST January 22, 2013.

ADDRESSES: Send written comments to the Joint Outreach Team at: *JOT@wapa.gov.* Comments may also be delivered by certified mail or commercial mail to: Anita J. Decker, Acting Administrator, Western Area Power Administration, P.O. Box 281213, Lakewood, CO 80228–8213 or fax to (720) 962–7059.

FOR FURTHER INFORMATION CONTACT: For further information please contact Ronald E. Moulton, Transmission Services Manager, Western Area Power Administration, or Jennifer DeCesaro, Special Advisor, Renewable Energy and Transmission, Department of Energy, via email at *JOT@wapa.gov.* This notice is also available on Western's Web site at h*ttp://ww2.wapa.gov/sites/western/about/Pages/Definingfuture.aspx*.

SUPPLEMENTARY INFORMATION: Western's mission is to market and deliver reliable, cost-based Federal hydroelectric power and related services to its customers. The Federal government, through four Power Marketing Administrations (PMAs), owns and operates approximately 33,730 miles of transmission lines, overlaying approximately 42 percent of the continental United States. Of that total, Western owns approximately 17,000 miles of high-voltage transmission lines with a footprint covering 15 states in the central and western U.S. To facilitate the transition of America's transmission system to a more resilient and flexible grid while reducing costs to consumers, Western and DOE formed the JOT. The team conducted a series of informational webinars, as well as stakeholder outreach workshops in five locations and listening sessions in six locations in Western's service territory with over 500 participants registering to provide input on the process and recommendations. The information gathered, combined with written stakeholder comments and the expertise of Western and DOE subject matter experts, informed the development of the draft recommendations that are now being published for public comment. Development of the final recommendations will be informed by comments received in response to this Notice.

The draft recommendations are available for review and comment at Western's Web site at *http://ww2.wapa.gov/sites/western/about/Pages/Definingfuture.aspx.* Western and DOE seek comment on the substance of the recommendations, whether any or all of the individual recommendations should be pursued and prioritization of the various actions that may be implemented or further pursued. Comments submitted in response to this notice should include the following information:

1. Name and general description of the entity submitting the comment.

2. Name, mailing address, telephone number, and email address of the entity's primary contact.

3. Identification of any specific recommendation the comment references.

Environmental Compliance

In compliance with the National Environmental Policy Act of 1969 (NEPA) (42 U.S.C. 4321, *et seq.*), the Council on Environmental Quality Regulations for Implementing NEPA (40 CFR parts 1500–1508) and the DOE NEPA Implementing Procedures and Guidelines (10 CFR part 1021), Western has determined that the publication of the draft recommendations and solicitation of comments is categorically excluded from further NEPA analysis. Future actions under this authority will undergo appropriate NEPA analysis.

Dated: November 13, 2012.

Anita J. Decker,

Acting Administrator, Western Area Power Administration.

Lauren Azar,

Senior Advisor to the Secretary, U.S. Department of Energy.

[FR Doc. 2012–28175 Filed 11–19–12; 8:45 am]

BILLING CODE 6450–01–P

ENVIRONMENTAL PROTECTION AGENCY

[EPA–HQ–OAR–2005–0161; FRL–9752–6]

Proposed Information Collection Request; Comment Request; Renewable Fuels Standard (RFS2) Program

AGENCY: Environmental Protection Agency (EPA).

ACTION: Notice.

SUMMARY: The Environmental Protection Agency is planning to submit an information collection request (ICR), ''Renewable Fuels Standard (RFS2) Program'' (EPA ICR No. 2380.20, OMB Control No. 2060–0637) to the Office of Management and Budget (OMB) for review and approval in accordance with the Paperwork Reduction Act (44 U.S.C. 3501 *et seq.*). Before doing so, EPA is soliciting public comments on specific aspects of the proposed information collection as described below. This is a ''RENEWAL'' of the ICR, which is currently approved through March 31, 2013. An Agency may not conduct or sponsor and a person is not required to respond to a collection of information unless it displays a currently valid OMB control number.

DATES: Comments must be submitted on or before January 22, 2013.

ADDRESSES: Submit your comments, referencing Docket ID No. EPA–HQ–OAR–2005–0161 online using *www.regulations.gov,* or in person viewing at the Air Docket in the EPA Docket Center in Washington, DC (EPA/DC). The docket is located in the EPA West Building, 1301 Constitution Avenue NW., Room 3334, and is open from 8:30 a.m. to 4:30 p.m. Eastern Standard Time, Monday through Friday, excluding legal holidays, or by mail to: EPA Docket Center, Environmental Protection Agency, Mail Code 28221T, 1200 Pennsylvania Ave. NW., Washington, DC 20460.

EPA's policy is that all comments received will be included in the public docket without change including any personal information provided, unless the comment includes profanity, threats, information claimed to be Confidential Business Information (CBI) or other information whose disclosure is restricted by statute.

FOR FURTHER INFORMATION CONTACT: Geanetta Heard, Fuels Compliance Center, 6406J Environmental Protection Agency, 1200 Pennsylvania Ave. NW., Washington, DC 20460; telephone number: 202–343–9017, fax number: 202–343–2800; email address: *heard.geanetta@epa.gov.*

SUPPLEMENTARY INFORMATION: Supporting documents which explain in detail the information that the EPA will be collecting are available in the public docket for this ICR. The docket can be viewed online at *www.regulations.gov* or in person at the EPA Docket Center, EPA West, Room 3334, 1301 Constitution Ave. NW., Washington, DC. The telephone number for the Docket Center is 202–566–1744. For additional information about EPA's public docket, visit *http://www.epa.gov/docke*ts.

Pursuant to section 3506(c)(2)(A) of the PRA, EPA is soliciting comments and information to enable it to: (i) Evaluate whether the proposed collection of information is necessary for the proper performance of the functions of the Agency, including whether the information will have practical utility; (ii) evaluate the accuracy of the Agency's estimate of the burden of the proposed collection of information, including the validity of the methodology and assumptions used; (iii) enhance the quality, utility, and clarity of the information to be collected; and (iv) minimize the burden of the collection of information on those who are to respond, including through the use of appropriate automated electronic, mechanical, or other technological collection techniques or other forms of information technology, e.g., permitting electronic submission of responses. EPA will consider the comments received and amend the ICR as appropriate. The final ICR package will then be submitted to OMB for review and approval. At that time, EPA will issue another **Federal Register** notice to announce the submission of the ICR to OMB and the opportunity to submit additional comments to OMB.

Abstract: EPA would like to continue to collect annual reports, initial registrations and updates by way of the Agency's CDX and petitions for renewable fuels pathways from the regulated RFS industry. The recordkeeping and reporting of this regulation will allow EPA to monitor compliance with the RFS program. We inform respondents that they may assert claims of business confidentiality (CBI) for information they submit in accordance with 40 CFR Part 2203.

Form Numbers:

RFS0103: RFS2 Q1 2012 Activity Report.
RFS0104: RFS2 Activity Report.
RFS0201: RFS1 RIN Transaction Report (only if RFS1 RINs were bought, sold, retired, or reinstated).
RFS0600: RFS2 Renewable Fuel Producer Supplemental Report (if applicable).
RFS0701: RFS2 Renewable Fuel Producer Co-products Report.
RFS0801: RFS2 Renewable Biomass Report.
RFS0901: RFS2 Production Outlook Report.
EMTS: RFS2 RIN Transaction Report.
EMTS: RFS2 RIN Generation Report (Equivalent to RFS0400).
RFS0301: RFS2 2010 Annual Compliance Report.
RFS0302: RFS2 2011 Annual Compliance Report.
EMTS: RFS2 RIN Transaction Report.

Respondents/affected entities: Producers of Renewable Fuels, Importers, Obligated Parties, Parties who own RINS (including foreign RIN owners).

Respondent's obligation to respond: mandatory Sections 114 and 208 of the Clean Air Act (CAA), 42 U.S.C. 7414 and 7542.

Estimated number of respondents: 6065.

Frequency of response: Annually.

Total estimated burden: 52,095 hours (per year). Burden is defined at 5 CFR 1320.03(b).

Total estimated cost: $8,010,130 (per year), includes $320 annualized capital or operation & maintenance costs.

Changes in Estimates: This decrease came due to the change in the respondent universe. Two obligated parties categories, the importers of renewable fuels and any party who own/intend to own RINs which include blenders, brokers and marketers dropped significantly. Importers dropped from 360 responses to 270 and any party who own/intend to own RINs which include blenders, brokers and marketers dropped from 3000 responses to 1650 thus lessoning the reporting burden. The number of responses by these two parties decreased by a total of 6,638 responses and 7530 hours.

Dated: November 8, 2012.

Byron Bunker,

Director, Transportation and Regional Programs Division.

[FR Doc. 2012–28218 Filed 11–19–12; 8:45 am]

BILLING CODE 6560–50–P

ENVIRONMENTAL PROTECTION AGENCY

[FRL–9753–8]

Casmalia Disposal Site; Notice of Proposed CERCLA Administrative De Minimis Settlement

AGENCY: Environmental Protection Agency (EPA).

ACTION: Notice; request for public comment.

SUMMARY: In accordance with section 122(i) of the Comprehensive Environmental Response, Compensation, and Liability Act, as amended (CERCLA) and section 7003 of the Resource Conservation and Recovery Act (RCRA), EPA is hereby providing notice of a proposed administrative *de minimis* settlement concerning the Casmalia Disposal Site in Santa Barbara County, California (the Casmalia Disposal Site). Section 122(g) of CERCLA provides EPA with the authority to enter into administrative *de minimis* settlements. This settlement is intended to resolve the liabilities of 290 settling parties for the Casmalia Disposal Site under sections 106 and 107 of CERCLA and section 7003 of RCRA. These parties are identified below. These parties have also elected to resolve their liability for response costs and potential natural resource damage claims by the United States Fish and Wildlife Service (USFWS) and the National Oceanic and Atmospheric Administration (NOAA). These 290 parties sent 22,841,618 lbs. of waste to the Casmalia Disposal Site, which represents 0.004 (0.4%) of the total Site waste of 5.6 billion pounds. This settlement requires these parties to pay over $2 million to EPA.

Settling Parties: Parties that have elected to settle their liability with EPA at this time are as follows: A Finkl & Sons Co., AAMCO Transmissions Incorporated, Abbott Laboratories, Ace Orthopedic Manufacturing, Inc., Active Magnetic Inspection, Inc., Acton-Agua Dulce Unified School District, Adventist Health, All Diameter Grinding Inc., Allied Pacific Metal Stamping, Alloys Cleaning Inc., Alzeta Corporation, Ambassador Auto, Amercom-Atlantic Research Corp, American Chemical Etching, American Magnetics Corporation, American Rubber Manufacturing, American Security Products Co., Anacapa Marine Services, Analogy Devices, Inc as Successor to Precision Monolithics, Analytical Systems, Division of Marion Labs, Anja Engineering Corporation, Antioch Unified School District, Apex Drum Company, Inc., APL Limited, Aratex Services, Inc., ARB, Inc., Architectural Plywood Inc., Arlon Products, Arnco, Asbury Oil Co., Associated Spring Corporation, Astro Plating, Atlas Radiator Service, Autologic Inc., Avantek,Babcock Inc., BASF Corporation, Bausch & Lomb, Beauman Trust/John L. Hunter & Associates, Better Bilt Aluminum, Big Creek Lumber Company, Blount International, Bonita Packing Co., Brown and Caldwell, Brunswick Corporation, Cal Doran, California Acrylic Industries, California Oil Recyclers, Calnap Tanning Co, Calstar Motors, Inc., Cal-Tron Plating, Caputo Associates, Cargill, Inc., Carter Precision Parts, Inc., Carter-Wallace Inc., Cascade Die Casting Group, Inc., Cate School, Certified Grocers, Chase Packaging Corporation, Chemrex Coatings Corporation, Children's Hospital of Los Angeles, CHM Manufacturing West, Inc., Chrome Nickel Plating, Circle Seal, City of Barstow, City of Buena Park, City of Chino, City of Costa Mesa, City of Glendale, City of Hope National Medical Center, City of Manteca, City of Ontario, City of Port Hueneme, City of San Rafael, City of Santa Fe Springs, Commercial Plating and Engineering Corporation, Inc., Concorde Interstate Battery Co., Connor Spring Manufacturing, Continental Heat Treating, Continental Manufacturing Co., Cook Paint Company, Cool Transports, Inc., Coral Chemical Company, Costco, County of Nevada, Crest Beverage, LLC, Crossfield Products Corporation, Crown Disposal Inc., Custom Chemical Formulators, Inc., Dayton-Granger, Inc., Del Mar Window Coverings, DeVincenci Metal Products, Inc., Disk Media, Inc., Downey Grinding, DuBois Chemicals, Dunn School, DV Industries, Inc., Dynacast Inc., Dynatech Corporation, Dynatem/R C Circuits, Eaz-Lift Spring Corporation, El Paso Electric Co., Electrolurgy, Inc., Electron Plating III, Inc., Electronic Chrome Co., Inc., Entenmann's/Orowheat, Eva Fkiaras, Evans Tank Lines, Exel Corp./Exel Microelectronics, Inc., Fabri Cote, Farmers Insurance Company, Feather River Forest Products Company, Federal Manufacturing Corporation, Fibre Container Corporation, Fifield Land Company, Film Salvage Company, Fontana Wood Preserving, Inc., Formica Corporation, Frito-Lay, Inc, Fritz Burns Foundation, FUJI Hunt USA, Future Foam, Gaehwiler M. Construction Inc., Garner Glass Company, GCG Corporation, General Chemical Corporation, Geophysical Service, Inc., Glenair, Inc., Gold Fields Operating Company, Golden State Foods Corporation, H.A. Luallen, Inc., H.G. Fenton Company, Hannibal Industries, Harbor Diesel and Equipment,Inc, Hartson's Ambulance Service, Hermetic Seal Corporation, Hill Refrigeration Corporation, Hi-Rel Connectors, Inc., Holt Inc., Hosokawa Micron International, Inc., House of Packaging, Humana, Inc., Hyundai Electronics America, International Rectifier Corporation, Irv Guinn, J.B. Dewar, Inc., James Jones Company, Johnson Controls, Inc, Kern High School District, Kern Oil & Refining Company, Keystone Automotive Industries, Inc., Kingsbacher-Murphy, Wesco Division, Lamsco West Inc., Layne Western, Leisure Village Association, Inc., Libby Owens Ford Co, Liquid Investment, Inc., Loctite Corporation, Lompoc Unified School District, Los Angeles Trade-Technical College, Lucas Valley Properties, Inc., Macklanburg-Duncan Company, MAPO, Maruichi America Corp, McDermott, Inc., MDT Biologic Company, Meggitt-USA, Mestek, Inc., MH Golden, Micro Metallics Corp, Micro Power Systems, Mid-State Industrial Insulation, Inc., Moshe Silagi, NCR Corporation, Neal Feay Company, Nelson Name Plate Company, NH3 Service Company, Inc., Norac Company, Nor-Cal Frozen Foods, Nortek Inc, Northern California Power Agency, Norton & Son of California, Nova Transportation Corp, Ojai Oil Company, O'Neil Data Systems, Inc., Orange Heights Orange Association, Oregon State University, Pacific Southwest Mortgage, Pacific Holding Company, Packaging Industries, Park Engineering and Manufacturing Co., Pebble Beach Company, Petaluma Joint Union High School District, Peterson Tractor Company, Pictsweet Company, Plastic Dress-Up Company, Polycore Electronics, Inc., Polymetrics Inc., Precision Tube Bending, Quest Diagnostics, Ramona's Mexican Food Products, RBC Bearings, Redman Equipment & Manufacturing Co, Redwood General Tire, Regillus Homeowners Association, Relton Corporation, Replacement Parts Manufacturing, Republic Fasteners Mfg. Corp, Reuland Electric Company, Reynolds & Reynolds Company, Richmond Honda, Rolls Scaffold & Equipment Inc., Rose Hills Memorial Park, Royal Paper Box Company, Royal Rubber & Manufacturing Company, S&K Plating, Inc., S. J. Amoroso Construction Co., Inc., SAE International, San Francisco Newspaper Agency, San Ysidro Ranch, Sandberg Furniture Mfg, Inc., Santa Barbara Metropolitan, Santa Clara Unified School District, Santa Clara Valley Water District, Santa Maria Ford, Santa Maria Valley Warehouse, Sav-On Plating, Schlumberger Well Service, Sealright Co., Inc., Sepulveda Building Materials, Sheller-Globe Corporation, Sierra Aluminum Company, Sierra Circuits, Inc., Signet Armorlite, Inc., Smith Brothers Crane Rental, Inc., Snap-on Industrial, Southern California Gardeners' Federation, Inc., Speedy Circuits, Inc., Stabile Plating Co. Inc., State of Hawaii, State of Oregon Department of Corrections, State of Oregon Department

of Environmental Quality, Steiny and Company, Inc, Suburban Motel, Sullivan Standard, Sumiden Wire Products, Tailored Masonry of California, TCR Industries, Inc., Tension Envelope Corporation, Terminal Freezers, Inc., Textile Rubber, Textured Coatings of America, The Gainey Vineyard, The Kingsfords Product Company, Thomas Printing Ink, Thomson-CSF Components Corporation, Three D Service Company, Toby's Automotive, Trailer Train Co., Cal Pro Divison, Trident Plating Inc, Tri-Ex Tower Corporation, Trimm Industries, Truck Rail Handling, Inc., U.S. Chrome Corporation of California, U.S. Circuit, Inc., Universal Punch Corporation, University of Oregon, V&M Plating Company, Valley Circuits,Van Nuys Plating, Inc., Ventura County Star Free Press, Votaw Precision Technologies, Inc., W.A. Kruger Co., W.M. Lyles Co., W.R. Hatch Company, Wallenius Lines, Waltco, Wareham Development Corporation, Wells Fargo Bank, Western Digital Corporation, Western Metal Lath, William S. Hart Union High, School District, Wilsey Foods, Inc., Windowmaster Products, Inc., Woodward & Clyde Consultants, World Airways, Zep Manufacturing Co., Zephyr Mfg. Company.

DATES: EPA will receive written comments relating to the settlement until December 20, 2012. EPA will consider all comments it receives during this period, and may modify or withdraw consent to the settlement if any comments disclose facts or considerations indicating that the settlement is inappropriate, improper, or inadequate.

Public Meeting: In accordance with section 7003(d) of RCRA, 42 U.S.C. 6973(d), commenters may request an opportunity for a public meeting in the affected area. The deadline for requesting a public meeting is December 4, 2012. Requests for a public meeting may be made by contacting Karen Goldberg by email at *goldberg.karen@epa.gov,* or by facsimile at (415) 947–3570. If a public meeting is requested, information about the date and time of the meeting will be published in the local newspaper, *The Santa Maria Times,* and will be sent to persons on the EPA's Casmalia Site mailing list. To be added to the mailing list, please contact: Jackie Lane at (415) 972–3236 or by email at *lane.jackie@epa.gov.* A copy of the settlement document may be obtained by calling (415) 369–0559 extension 10, and leaving a message with your name, phone number, and mailing address or email address.

ADDRESSES: Written comments should be addressed to Karen Goldberg, U.S. Environmental Protection Agency Region IX, 75 Hawthorne Street (mail code RC–3), San Francisco, California 94105–3901, or may be faxed to her at (415) 947–3570 or sent by email to *goldberg.karen@epa.gov.*

FOR FURTHER INFORMATION CONTACT: Additional information about the Casmalia Disposal Site and about the proposed settlement may be obtained on the EPA-maintained Casmalia Web site at: *http://www.epa.gov/region09/casmalia* or by calling Karen Goldberg at (415) 972–3951.

Dated: September 27, 2012.

Jane Diamond,

Director, Superfund Division, U.S. EPA Region IX.

[FR Doc. 2012–28223 Filed 11–19–12; 8:45 am]

BILLING CODE 6560–50–P

FEDERAL COMMUNICATIONS COMMISSION

Information Collection Being Reviewed by the Federal Communications Commission

AGENCY: Federal Communications Commission.

ACTION: Notice and request for comments.

SUMMARY: The Federal Communications Commission (FCC), as part of its continuing effort to reduce paperwork burdens, invites the general public and other Federal agencies to take this opportunity to comment on the following information collection, as required by the Paperwork Reduction Act (PRA) of 1995. Comments are requested concerning whether the proposed collection of information is necessary for the proper performance of the functions of the Commission, including whether the information shall have practical utility; the accuracy of the Commission's burden estimate; ways to enhance the quality, utility, and clarity of the information collected; ways to minimize the burden of the collection of information on the respondents, including the use of automated collection techniques or other forms of information technology; and ways to further reduce the information collection burden on small business concerns with fewer than 25 employees.

The FCC may not conduct or sponsor a collection of information unless it displays a currently valid control number. No person shall be subject to any penalty for failing to comply with a collection of information subject to the PRA that does not display a valid Office of Management and Budget (OMB) control number.

DATES: Written PRA comments should be submitted on or before January 22, 2013. If you anticipate that you will be submitting comments, but find it difficult to do so within the period of time allowed by this notice, you should advise the contact listed below as soon as possible.

ADDRESSES: Direct all PRA comments to Cathy Williams, FCC, via email *PRA@fcc.gov mailto:PRA@fcc.gov* and to *Cathy.Williams@fcc.gov mailto:Cathy.Williams@fcc.gov*.

FOR FURTHER INFORMATION CONTACT: For additional information about the information collection, contact Cathy Williams at (202) 418–2918.

SUPPLEMENTARY INFORMATION:

OMB Control Number: 3060–xxxx.

Title: Establishment of a Public Safety Answering Point Do-Not-Call Registry, CG Docket No. 12–129.

Form Number: N/A.

Type of Review: New collection.

Respondents: Business or other for-profit entities; Federal Government; Not-for-profit institutions; State Local or Tribal Government.

Number of Respondents and Responses: 106,500 respondents; 1,446,333 responses.

Estimated Time per Response: 30 minutes (.50 hours) to 2 hours.

Frequency of Response: Recordkeeping requirement; Annual, monthly, on occasion and one-time reporting requirements.

Obligation To Respond: Required to obtain or retain benefits. The statutory authority for the information collection requirements is found in the Middle Class Tax Relief and Job Creation Act of 2012, Public Law 112–96, February 22, 2012.

Total Annual Burden: 792,667 hours.

Total Annual Cost: None.

Nature and Extent of Confidentiality: An assurance of confidentiality is not offered because this information collection does not require the collection of personally identifiable information from individuals.

Privacy Impact Assessment: No impact(s).

Needs and Uses: The rules adopted herein establish recordkeeping requirements for a large variety of entities, including small business entities. First, each Public Safety Answering Point (PSAP) may designate a representative who shall be required to file a certification with the administrator of the PSAP registry that they are authorized to place numbers

onto that registry. The designated PSAP representative shall provide contact information including the PSAP represented, name, title, address, telephone number and email address. Verified PSAPs shall be permitted to upload to the registry any PSAP telephone associated with the provision of emergency services or communications with other public safety agencies. On an annual basis designated PSAP representatives shall access the registry, review their numbers and remove any ineligible numbers from the registry. Second, an operator of automatic dialing equipment (OADE) is prohibited from contacting any number on the PSAP registry. Each OADE must register for access to the PSAP registry by providing contact information which includes name, business address, contact person, telephone number, email, and all outbound telephone numbers used to place autodialed calls. All such contact information must be updated within 30 days of any change. In addition, the OADE must certify that it is accessing the registry solely to prevent autodialed calls to numbers on the registry. An OADE must access and employ a version of the PSAP registry obtained from the registry administrator no more than 31 days prior to the date any call is made, and maintain record documenting this process. No person or entity may sell, rent, lease, purchase, share, or use the PSAP registry for any purpose expect to comply with our rules prohibiting contact with numbers on the registry.

Federal Communications Commission.

Gloria J. Miles,

Federal Register Liaison, Office of the Secretary, Office of Managing Director.

[FR Doc. 2012–28114 Filed 11–19–12; 8:45 am]

BILLING CODE 6712–01–P

FEDERAL RESERVE SYSTEM

Formations of, Acquisitions by, and Mergers of Bank Holding Companies

The companies listed in this notice have applied to the Board for approval, pursuant to the Bank Holding Company Act of 1956 (12 U.S.C. 1841 *et seq.*) (BHC Act), Regulation Y (12 CFR Part 225), and all other applicable statutes and regulations to become a bank holding company and/or to acquire the assets or the ownership of, control of, or the power to vote shares of a bank or bank holding company and all of the banks and nonbanking companies owned by the bank holding company, including the companies listed below.

The applications listed below, as well as other related filings required by the Board, are available for immediate inspection at the Federal Reserve Bank indicated. The applications will also be available for inspection at the offices of the Board of Governors. Interested persons may express their views in writing on the standards enumerated in the BHC Act (12 U.S.C. 1842(c)). If the proposal also involves the acquisition of a nonbanking company, the review also includes whether the acquisition of the nonbanking company complies with the standards in section 4 of the BHC Act (12 U.S.C. 1843). Unless otherwise noted, nonbanking activities will be conducted throughout the United States.

Unless otherwise noted, comments regarding each of these applications must be received at the Reserve Bank indicated or the offices of the Board of Governors not later than December 14, 2012.

A. Federal Reserve Bank of Cleveland (Nadine Wallman, Vice President) 1455 East Sixth Street, Cleveland, Ohio 44101–2566:

1. *Waterford Commercial and Savings Bank Shareholders Trust,* Waterford, Ohio; to become a bank holding company by acquiring 57 percent of the voting shares of The Waterford Commercial and Savings Bank, Waterford, Ohio.

Board of Governors of the Federal Reserve System.

Dated: November 15, 2012.

Margaret McCloskey Shanks,

Deputy Secretary of the Board.

[FR Doc. 2012–28171 Filed 11–19–12; 8:45 am]

BILLING CODE 6210–01–P

FEDERAL TRADE COMMISSION

Granting of Request for Early Termination of the Waiting Period Under the Premerger Notification Rules

Section 7A of the Clayton Act, 15 U.S.C. 18a, as added by Title II of the Hart-Scott-Rodino Antitrust Improvements Act of 1976, requires persons contemplating certain mergers or acquisitions to give the Federal Trade Commission and the Assistant Attorney General advance notice and to wait designated periods before consummation of such plans. Section 7A(b)(2) of the Act permits the agencies, in individual cases, to terminate this waiting period prior to its expiration and requires that notice of this action be published in the **Federal Register**.

The following transactions were granted early termination—on the dates indicated—of the waiting period provided by law and the premerger notification rules. The listing for each transaction Incudes the transaction number and the parties to the transaction. The grants were made by the Federal Trade Commission and the Assistant Attorney General for the Antitrust Division of the Department of Justice. Neither agency intends to take any action with respect to these proposed acquisitions during the applicable waiting period.

EARLY TERMINATIONS GRANTED OCTOBER 1, 2012 THROUGH OCTOBER 31, 2012

10/01/2012		
20121210	G	Standard Parking Corporation; KCPC Holdings, Inc.; Standard Parking Corporation.
20121392	G	Heckmann Corporation; Mark D. Johnsrud; Heckmann Corporation.
20121393	G	South Mississippi Electric Power Association; Batesville, Generation Holdings, LLC; South Mississippi Electric Power Association.
10/02/2012		
20121389	Y	Linden Capital Partners II LP; Beekman Investment Partners, LP; Linden Capital Partners II, LP.
20121390	G	New Mountain Partners III (AIV–D), L.P.; Angel I. Alvarez; New Mountain Partners III (AIV–D), L.P.
10/03/2012		
20121387	G	National Oilwell Varco, Inc.; White Deer Energy L.P.; National Oilwell Varco, Inc.
20121407	G	Arbor Investments III, L.P.; Endeavour Capital Fund IV, L.P.; Arbor Investments III, L.P.
10/05/2012		
20121385	G	Harvest Partners VI, L.P.; Sterling Investment Partners II, L.P.; Harvest Partners VI, L.P.
20121394	G	Nidec Corporation; The Resolute Fund, L.P.; Nidec Corporation.
20121403	G	Thoma Bravo Fund X, L.P.; Mediware Information Systems, Inc.; Thoma Bravo Fund X, L.P.
20121404	G	John Wood Group PLC; Stone Arch Capital, LLC; John Wood Group PLC.
20121405	G	Clipper Holdings, L.P.; Societe Generale, S.A.; Clipper Holdings, L.P.
20121406	G	Lightspeed Venture Partners VIII, L.P.; Nutanix, Inc.; Lightspeed Venture Partners VIII, L.P.
20121410	G	KRG Capital Fund IV. L.P.; Flexpoint Fund, L.P.; KRG Capital Fund IV. L.P.
20121412	G	New Mountain Partners III, L.P.; Court Square Capital Partners, L.P.; New Mountain Partners III, L.P.
20121413	G	Plains All American Pipeline, L.P.; Chesapeake Energy Corporation; Plains All American Pipeline, L.P.
20121418	G	Rentokil-Initial plc; Western Exterminator Company; Rentokil-Initial plc.
20121421	G	Nippon Steel Corporation; NS Bluescope Holdings USA LLC; Nippon Steel Corporation.
20121429	G	Canada Pension Plan Investment Board; Pinafore Investment Cooperatief U.A.; Canada Pension Plan Investment Board.
20121434	G	Blackstone Capital Partners VI L.P.; 2G Holding Company, LLC; Blackstone Capital Partners VI L.P.
20121436	G	Blackstone Capital Partners VI, L.P.; APX Group, Inc.; Blackstone Capital Partners VI, L.P.
20121437	G	Blackstone Capital Partners VI L.P.; V Solar Holdings, Inc.; Blackstone Capital Partners VI L.P.
20121438	G	McKesson Corporation; MED3000 Group, Inc.; McKesson Corporation.
20121440	G	Sterling Group Partners III, L.P.; Pinafore Investment Cooperatief U.A.; Sterling Group Partners III, L.P.
10/09/2012		
20121286	G	Danaher Corporation; Aperio Technologies, Inc.; Danaher Corporation.
20121334	G	Snyder's-Lance, Inc. VMG Taxable, L.P.; Snyder's-Lance, Inc.
20121378	G	Meda AB (publ); Jazz Pharmaceuticals Public Limited Company; Meda AB (publ).
20121400	G	Danaher Corporation; IRIS International, Inc.; Danaher Corporation.
20121422	G	Carlyle Infrastructure Partners, L.P.; The Goldman Sachs Group, Inc.; Carlyle Infrastructure Partners, L.P.
20121445	G	Apax VIII–A L.P.; Garda World Security Corporation; Apax VIII–A L.P.
10/10/2012		
20121397	G	Third Point Ultra, Ltd.; Murphy Oil Corporation; Third Point Ultra, Ltd.
20121398	G	Third Point Offshore Fund Ltd.; Murphy Oil Corporation; Third Point Offshore Fund Ltd.
20121399	G	Third Point Partners Qualified L.P.; Murphy Oil Corporation; Third Point Partners Qualified L.P.
20121411	G	American International Group, Inc.; The Hartford Financial Services Group, Inc.; American International Group, Inc.
10/11/2012		
20121425	G	ABRY Partners VII, LP; Genstar Capital Partners V, L.P.; ABRY Partners VII, LP.
20121430	G	Aquiline Financial Services Fund II L.P.; First Investors Financial Services Group, Inc.; Aquiline Financial Services Fund II L.P.
20121432	G	Franklin Resources, Inc.; K2 Advisors Holdings, LLC; Franklin Resources, Inc.
20130001	G	KKR Matterhorn Investors L.P.; FR X Offshore, L.P.; KKR Matterhorn Investors L.P.
20130009	G	Monty L. Boyd; Caterpillar, Inc.; Monty L. Boyd.
10/15/2012		
20130007	G	Ares Corporate Opportunities Fund III, L.P.; Harvest Partners V, L.P.; Ares Corporate Opportunities Fund III, L.P.
20130010	G	Honeywell International Inc.; Thomas Russell Holdings, L.L.C.; Honeywell International Inc.
20130011	G	ProAssurance Corporation; Medmarc Mutual Insurance Company; ProAssurance Corporation.
20130015	G	David E. Barensfeld; Richard Rose; David E. Barensfeld.
20130031	G	3M Company; Ceradyne, Inc.; 3M Company.
10/16/2012		
20121428	G	G. Brint Ryan; 2003 TIL Settlement; G. Brint Ryan.
20130018	G	Amaya Gaming Group Inc.; Oleg Boiko; Amaya Gaming Group Inc.
20130027	G	Avista Capital Partners III, L.P.; Union Drilling, Inc.; Avista Capital Partners III, L.P.

EARLY TERMINATIONS GRANTED OCTOBER 1, 2012 THROUGH OCTOBER 31, 2012—Continued

20130032	G	Churchill, Downs Incorporated; High River Gaming, LLC; Churchill, Downs Incorporated.
20130033	G	Wind Point Partners VII–A, L.P.; TPG Star, L.P.; Wind Point Partners VII–A, L.P.
10/17/2012		
20130002	G	National Hospice Holdings Investors, LLC; FC–GEN Operations Investment LLC; National Hospice Holdings Investors, LLC.
20130008	G	Compagnie Financiere Rupert; Peter Millar LLC; Compagnie Financiere Rupert.
20130016	G	Calpine Corporation; BosPower Partners LLC; Calpine Corporation.
20130017	G	Puget Holdings LLC; United States Power Fund II, LP; Puget Holdings LLC.
20130023	G	Russel Metals Inc.; Apex Distribution Inc.; Russel Metals Inc.
20130028	G	The Resolute Fund II, L.P.; Carlyle Partners V, L.P.; The Resolute Fund II, L.P.
10/19/2012		
20130020	G	Beecken Petty O'Keefe & Company Fund III, L.P.; PSS WorldMedical, Inc.; Beecken Petty O'Keefe & Company Fund III, L.P.
20130026	G	Canopius Holdings Bermuda Limited; Tower Group, Inc.; Canopius Holdings Bermuda Limited.
20130030	G	ABM Industries Incorporated; Francis A. Argenbright, Jr.; ABM Industries Incorporated.
20130034	G	CL Acquisition Holdings Limited; Cunningham Lindsey Group Limited; CL Acquisition Holdings Limited.
20130037	G	Precision Castparts Corp.; H.I.G. Capital Partners IV, L.P.; Precision Castparts Corp.
20130041	G	Platinum Equity Capital Partners III, L.P.; BWAY Parent Company, Inc.; Platinum Equity Capital Partners III, L.P.
10/22/2012		
20130021	G	E.P. Hamilton Trusts, LLC; Deltak edu, Inc.; E.P. Hamilton Trusts, LLC.
20130042	G	Edson de Godoy Bueno; UnitedHealth Group Incorporated; Edson de Godoy Bueno.
20130045	G	Gores Capital Partners III, L.P.; Johnson & Johnson; Gores Capital Partners III, L.P.
20130053	G	TPG Partners VI, L.P.; FPC Holdings, Inc.; TPG Partners VI, L.P.
10/23/2012		
20130019	G	Smurfit Kappa Group plc; CSI Texas Holdings Inc.; Smurfit Kappa Group plc.
20130038	G	Thoma Bravo Fund X, L.P.; Crossbeam Systems, Inc.; Thoma Bravo Fund X, L.P.
20130047	G	Highstar Capital IV Prism, L.P.; GWF Energy LLC; Highstar Capital IV Prism, L.P.
10/24/2012		
20130056	G	Ares Corporate Opportunities Fund III, L.P.; Apollo Investment Fund VI, L.P.; Ares Corporate Opportunities Fund III, L.P.
10/26/2012		
20121090	G	MacDonald, Dettwiler and Associates Ltd.; Loral Space & Communications Inc.; MacDonald, Dettwiler and Associates Ltd.
20130036	G	Humana Inc.; MCCI Holdings, LLC; Humana Inc.
20130048	G	Lee R. Anderson, Sr.; Max E. Nichols; Lee R. Anderson, Sr.
20130054	G	Dhiraj Rajaram; Mu Sigma, Inc.; Dhiraj Rajaram.
20130055	G	Mr. Sumner M. Redstone; GTCR Fund X/B LP; Mr. Sumner M. Redstone.
20130059	G	Stericycle, Inc.; Paul Spiegelman; Stericycle, Inc.
20130062	G	Sun Capital Partners V, L.P.; Comfort Co., Inc.; Sun Capital Partners V, L.P.
20130067	G	Harbinger Group Inc.; Stanley Black & Decker, Inc.; Harbinger Group Inc.
20130071	G	Ocwen Financial Corporation; WLR Recovery Fund IV, L.P.; Ocwen Financial Corporation.
20130072	G	WLR Recovery Fund IV, L.P.; Ocwen Financial Corporation; WLR Recovery Fund IV, L.P.
20130074	G	Anthony G. Petrello; Nabors Industries Ltd.; Anthony G. Petrello.
20130081	G	Eagle Materials Inc.; Lafarge S.A.; Eagle Materials Inc.
10/31/2012		
20130052	G	Bay Bridge Capital Partners, LLC GI Partners Fund II, L.P.; Bay Bridge Capital Partners, LLC.
20130058	G	Hamilton Infrastructure Trust; EQT Infrastructure Limited; Hamilton Infrastructure Trust.
20130075	G	Bruce Kovner; Synta Pharmaceuticals Corp.; Bruce Kovner.
20130078	G	Exxon Mobil Corporation; Denbury Resources Inc.; Exxon Mobil Corporation.
20130084	G	Monomoy Capital Partners II, L.P.; Ascalon Enterprises, LLC; Monomoy Capital Partners II, L.P.

FOR FURTHER INFORMATION CONTACT: Renee Chapman, Contact Representative,

or

Theresa Kingsberry, Legal Assistant, Federal Trade Commission, Premerger Notification Office, Bureau Of Competition, Room H–303, Washington, DC 20580, (202) 326–3100.

By Direction of the Commission.

Donald S. Clark,

Secretary.

[FR Doc. 2012–27838 Filed 11–19–12; 8:45 am]

BILLING CODE 6750–01–M

DEPARTMENT OF DEFENSE

GENERAL SERVICES ADMINISTRATION

NATIONAL AERONAUTICS AND SPACE ADMINISTRATION

[OMB Control No. 9000–0006; Docket 2012–0076; Sequence 57]

Federal Acquisition Regulation; Information Collection; Subcontracting Plans/Individual Subcontract Report (SF–294)

AGENCIES: Department of Defense (DOD), General Services Administration (GSA), and National Aeronautics and Space Administration (NASA).

ACTION: Notice of request for public comments regarding an extension to an existing OMB clearance.

SUMMARY: Under the provisions of the Paperwork Reduction Act, the Regulatory Secretariat will be submitting to the Office of Management and Budget (OMB) a request to review and approve an extension of a previously approved information collection requirement concerning subcontracting plans/individual subcontract report (SF–294).

Public comments are particularly invited on: Whether this collection of information is necessary for the proper performance of functions of the Federal Acquisition Regulations (FAR), and whether it will have practical utility; whether our estimate of the public burden of this collection of information is accurate, and based on valid assumptions and methodology; ways to enhance the quality, utility, and clarity of the information to be collected; and ways in which we can minimize the burden of the collection of information on those who are to respond, through the use of appropriate technological collection techniques or other forms of information technology.

DATES: Submit comments on or before January 22, 2013.

ADDRESSES: Submit comments identified by Information Collection 9000–0006, Subcontracting Plans/Individual Subcontract Report (SF–294), by any of the following methods:

- *Regulations.gov: http://www.regulations.gov.* Submit comments via the Federal eRulemaking portal by searching the OMB control number. Select the link ''Submit a Comment'' that corresponds with ''Information Collection 9000–0006, Subcontracting Plans/Individual Subcontract Report (SF–294)''. Follow the instructions provided at the ''Submit a Comment'' screen. Please include your name, company name (if any), and ''Information Collection 9000–0006, Subcontracting Plans/Individual Subcontract Report (SF–294)'' on your attached document.
- *Fax:* 202–501–4067.
- *Mail:* General Services Administration, Regulatory Secretariat (MVCB), 1275 First Street NE., Washington, DC 20417. ATTN: Hada Flowers/IC 9000–0006, Subcontracting Plans/Individual Subcontract Report (SF–294).

Instructions: Please submit comments only and cite Information Collection 9000–0006, Subcontracting Plans/Individual Subcontract Report (SF–294), in all correspondence related to this collection. All comments received will be posted without change to *http://www.regulations.gov,* including any personal and/or business confidential information provided.

FOR FURTHER INFORMATION CONTACT: Mr. Karlos Morgan, Procurement Analyst, Office of Acquisition Policy, GSA (202) 501–2364 or email *karlos.morgan@gsa.gov.*

SUPPLEMENTARY INFORMATION:

I. Purpose

In accordance with Federal Acquisition Regulation 19.702, contractors receiving a contract for more than the simplified acquisition threshold agree to have small business, small disadvantaged business, and women-owned small business, HUBZone small business, veteran-owned small business and service-disabled veteran-owned small business concerns participate in the performance of the contract as far as practicable. Contractors receiving a contract or a modification to a contract expected to exceed $650,000 ($1,500,000 for construction) must submit a subcontracting plan that provides maximum practicable opportunities for the above named concerns. Specific elements required to be included in the plan are specified in section 8(d) of the Small Business Act and implemented in FAR subpart 19.7.

In conjunction with the subcontracting plan requirements, contractors must submit semi-annual reports of their small business subcontracting progress to the government. With the exception of those contracts noted in FAR 4.606(c)(5) which states ''Actions that, pursuant to other authority, will not be entered in FPDS (e.g., reporting of the information would compromise national security)'', contractors must use the electronic Individual Subcontract Report (ISR) in lieu of the Standard Form 294, Subcontracting Report for Individual Contracts. Those contract actions noted in FAR 4.606(c)(5) will continue to use the Standard Form 294.

The ISR in the Electronic Subcontracting Reporting System (eSRS) is the electronic equivalent of the Standard Form 294, Subcontracting Report for Individual Contracts. The Electronic Subcontracting Reporting System streamlines the small business subcontracting program reporting process and provides the data to agencies in a manner that enables them to more effectively manage the program.

II. Annual Reporting Burden

Based on information from eSRS and an estimate of the use of eSRS, an upward adjustment is being made to the number of respondents, but a downward adjustment is being made to the average burden hours for reporting and recordkeeping per response. As a result, a downward adjustment is being made to the estimated annual reporting burden since the notice regarding an extension to this clearance published in the **Federal Register** at 75 FR 9604, on March 3, 2010.

Respondents: 129,009.

Responses per Respondent: 3.

Total Responses: 387,027.

Average Burden Hours per Response: 8.50.

Total Burden Hours: 3,289,729.50.

Obtaining Copies of Proposals: Requesters may obtain a copy of the information collection documents from the General Services Administration, Regulatory Secretariat (MVCB), 1275 First Street NE., Washington, DC 20417, telephone (202) 501–4755. Please cite OMB Control No. 9000–0006, Subcontracting Plans/Individual Subcontract Report (SF–294), in all correspondence.

Dated: November 8, 2012.

William Clark,

Acting Director, Federal Acquisition Policy Division, Office of Governmentwide Acquisition Policy, Office of Acquisition Policy, Office of Governmentwide Policy.

[FR Doc. 2012–28034 Filed 11–19–12; 8:45 am]

BILLING CODE 6820–EP–P

DEPARTMENT OF DEFENSE

GENERAL SERVICES ADMINISTRATION

NATIONAL AERONAUTICS AND SPACE ADMINISTRATION

[OMB Control No. 9000–0175; Docket 2012–0076, Sequence 65]

Information Collection; Use of Project Labor Agreements for Federal Construction Projects

AGENCY: Department of Defense (DOD), General Services Administration (GSA), and National Aeronautics and Space Administration (NASA).

ACTION: Notice of request for public comments regarding an extension of an existing OMB information clearance.

SUMMARY: Under the provisions of the Paperwork Reduction Act, the Regulatory Secretariat will be submitting to the Office of Management and Budget (OMB) a request to review and approve an extension of an existing information collection requirement regarding Use of Project Labor Agreements for Federal Construction Projects.

Public comments are particularly invited on: Whether this collection of information is necessary for the proper performance of functions of the Federal Acquisition Regulations (FAR), and whether it will have practical utility; whether our estimate of the public burden of this collection of information is accurate, and based on valid assumptions and methodology; ways to enhance the quality, utility, and clarity of the information to be collected; and ways in which we can minimize the burden of the collection of information on those who are to respond, through the use of appropriate technological collection techniques or other forms of information technology.

DATES: Submit comments on or before January 22, 2013.

ADDRESSES: Submit comments identified by *Information Collection 9000–0175, Use of Project Labor Agreements for Federal Construction Projects,* by any of the following methods:

- *Regulations.gov: http://www.regulations.gov.* Submit comments via the Federal eRulemaking portal by searching the OMB control number. Select the link ''Submit a Comment'' that corresponds with ''Information Collection 9000–0175, Use of Project Labor Agreements for Federal Construction Projects''. Follow the instructions provided at the ''Submit a Comment'' screen. Please include your name, company name (if any), and ''Information Collection 9000–0175, Use of Project Labor Agreements for Federal Construction Projects'' on your attached document.
- *Fax:* 202–501–4067.
- *Mail:* General Services Administration, Regulatory Secretariat (MVCB), 1275 First Street NE., Washington, DC 20417. ATTN: Hada Flowers/IC 9000–0175, Use of Project Labor Agreements for Federal Construction Projects.

Instructions: Please submit comments only and cite Information Collection 9000–0175, Use of Project Labor Agreements for Federal Construction Projects, in all correspondence related to this collection. All comments received will be posted without change to *http://www.regulations.gov,* including any personal and/or business confidential information provided.

FOR FURTHER INFORMATION CONTACT: Mr. Edward Loeb, Procurement Analyst, Office of Governmentwide Acquisition Policy, at telephone (202) 501–0650 or via email to *Edward.loeb@gsa.gov.*

SUPPLEMENTARY INFORMATION:

A. Purpose

FAR 22.501 prescribes policies and procedures to implement Executive Order 13502, February 6, 2009 which encourages Federal agencies to consider the use of a project labor agreement (PLA), as they may decide appropriate, on large-scale construction projects, where the total cost to the Government is more than $25 million, in order to promote economy and efficiency in Federal procurement. A PLA is a pre-hire collective bargaining agreement with one or more labor organizations that establishes the terms and conditions of employment for a specific construction project. FAR 22.503(b) provides that an agency may, if appropriate, require that every contractor and subcontractor engaged in construction on the project agree, for that project, to negotiate or become a party to a project labor agreement with one or more labor organizations if the agency decides that the use of project labor agreements will—

(1) Advance the Federal Government's interest in achieving economy and efficiency in Federal procurement, producing labor-management stability, and ensuring compliance with laws and regulations governing safety and health, equal employment opportunity, labor and employment standards, and other matters; and,

(2) Be consistent with law.

B. Annual Reporting Burden

Respondents: 70.
Responses per Respondent: 1.
Annual Responses: 70.
Hours per Response: 1.
Total Burden Hours: 70.
Obtaining Copies of Proposals: Requesters may obtain a copy of the information collection documents from the General Services Administration, Regulatory Secretariat (MVCB), 1275 First Street NE., Washington, DC 20417, telephone (202) 501–4755. Please cite OMB Control No. 9000–0175, Use of Project Labor Agreements for Federal Construction Projects, in all correspondence.

Dated: November 8, 2012.

William Clark,

Acting Director, Federal Acquisition Policy Division, Office of Governmentwide Acquisition Policy, Office of Acquisition Policy, Office of Governmentwide Policy.

[FR Doc. 2012–28251 Filed 11–19–12; 8:45 am]

BILLING CODE 6820–EP–P

DEPARTMENT OF HEALTH AND HUMAN SERVICES

Office of the Secretary

Findings of Research Misconduct

AGENCY: Office of the Secretary, HHS.

ACTION: Notice.

SUMMARY: Notice is hereby given that the Office of Research Integrity (ORI) has taken final action in the following case:

Eric J. Smart, Ph.D., University of Kentucky: Based on the report of an investigation conducted by the University of Kentucky (UK) and additional analysis conducted by ORI in its oversight review, ORI found that Dr. Eric J. Smart, former Professor of Pediatrics and Physiology, Department of Pediatrics and Physiology, UK, engaged in research misconduct in research supported by National Heart, Lung, and Blood Institute (NHLBI), National Institutes of Health (NIH), grants R01 HL062844, R01 HL058475, R01 HL064056, R01 HL068059, and R01 HL073693, National Institute of Diabetes and Digestive and Kidney Diseases (NIDDK), NIH, grant R56 DK063025, and National Center for Research Resources (NCRR), NIH, grant P20 RR105592.

ORI found that the Respondent engaged in research misconduct by falsifying and/or fabricating data that were included in ten (10) published papers, one (1) submitted manuscript, seven (7) grant applications, and three (3) progress reports over a period of ten (10) years. Respondent reported experimental data for knockout mice that did not exist in five (5) grant applications and three (3) progress reports and also falsified and/or fabricated images in 45 figures included in the following:

- *J. Biol. Chem.* 277(7):4925–31, 2002
- *Am J. Physiol. Cell Physiol.* 291(6):C1271–8, 2006
- *Am J. Physiol. Cell Physiol.* 294(1):C295–305, 2008
- *J. Lipid Res.* 42:1444–1449, 2001
- *J. Biol. Chem.* 275:25595, 2000
- *J. Biol. Chem.* 277(26):23525–33, 2002
- *Proc. Natl. Acad. Sci. USA* 101(10):3450–5, 2004
- *J. Biol. Chem.* 280(33):29543–50, 2005
- *J. Biol. Chem.* 273:6525–6532, 1998
- *Am J. Physiol. Cell Physiol.* 282:C935–46, 2002
- ''Effects of HIV protease and nucleoside reverse transcriptase inhibitors on macrophage cholesterol accumulation in humans,'' submitted August 6, 2008
- R01 HL078976–01
- R01 HL078979–01A1
- R01 DK063025–01A2
- R01 HL088150–01
- U54 CA116853–01
- R01 HL093155–01
- R01 HL068509–01A1
- Progress reports HL078976–02, –03, and –04.

As a result of its investigation, UK recommended that the publication(s) listed above be retracted or corrected.

Specifically, ORI finds that Respondent:

- Falsely reported in Figure 14 and associated text in NIH grant applications R01 HL07897601 and –01A1 that experiments were performed to determine if endothelial-specific caveolin-1 null mice were protected from saturated fatty acid-induced atherosclerosis, when these mutant mice did not exist in the laboratory at the time; Dr. Smart also falsely reported the use of these mice in related progress reports R01 HL078976–02, –03, and –04 and in three (3) additional NIH grant applications: Figure 11 in R01 HL088150–01, Figure 11 in U54 CA116853, and Figure 9 in DK063025–01A2
- Falsified and/or fabricated images in NIH grant application R01 HL078976–01A1 by duplicating and altering bands in 14 Western blot images and one (1) RT–PCR image included in Figures 3, 6, 11, 12, 13, 14, and 15; false Western blots were also included in the earlier version of the grant application R01 HL078976–01, Figures 3, 6, 11, 13, and 14
- Falsified and/or fabricated Western blots and one (1) RNase protection assay by duplicating and altering bands in thirty-three (33) figures included in ten (10) published papers, one (1) submitted manuscript, and two (2) NIH grant applications. Specifically, false or fabricated images were included in:

< Figures 5 and 7, *J. Biol. Chem.* 277(7):4925–31, 2002

< Figure 4B, *Am J. Physiol. Cell Physiol.* 291(6):C1271–8, 2006

< Figures 2A, 3A, 6A, and 7A, *Am J. Physiol. Cell Physiol.* 294(1):C295–305, 2008

< Figures 3, 5, and 6, *J. Lipid Res.* 45:1444–1449, 2001

< Figure 2A, *J. Biol. Chem.* 275(33):25595–99, 2000

< Figures 2A/B/C and 4A/B, *J. Biol. Chem.* 277(26):23525–33, 2002

< Figures 2B/D and 4, *Proc. Natl. Acad. Sci. USA* 101(10):3450–5, 2004

< Figures 1A and 5B, *J. Biol. Chem.* 280(33):29543–50, 2005

< Figures 1A, 2A/B, and 4A, *J. Biol. Chem.* 273:6525–6532, 1998

< Figure 1B, *Am J. Physiol. Cell Physiol.* 282:C935–46, 2002

< Figures 2A, 4, 6B, 7, and 8 in a submitted manuscript

< Figures 7A, 8A, 9A, and 10B in grant application HL093155–01

< Figures 4, 7, and 13 in grant application HL068509–01A1.

Dr. Smart has entered into a Voluntary Exclusion Agreement and has voluntarily agreed for a period of seven (7) years, beginning on October 23, 2012:

(1) To exclude himself from any contracting or subcontracting with any agency of the United States Government and from eligibility or involvement in nonprocurement programs of the United States Government referred to as ''covered transactions'' pursuant to HHS' Implementation (2 CFR part 376 *et seq.*) of OMB Guidelines to Agencies on Govermentwide Debarment and Suspension, 2 CFR part 180 (collectively the ''Debarment Regulations'');

(2) To exclude himself voluntarily from serving in any advisory capacity to PHS including, but not limited to, service on any PHS advisory committee, board, and/or peer review committee, or as a consultant; and

(3) To request that the following publications be retracted or corrected: *J. Biol. Chem.* 277(7):4925–31, 2002; *Am J. Physiol. Cell Physiol.* 291(6):C1271–8, 2006; *Am J. Physiol. Cell Physiol.* 294(1):C295–305, 2008; *J. Lipid Res.* 42:1444–1449, 2001; *J. Biol. Chem.* 275:25595, 2000; *J. Biol. Chem.* 277(26):23525–33, 2002; *Proc. Natl. Acad. Sci. USA* 101(10):3450–5, 2004; *J. Biol. Chem.* 280(33):29543–50, 2005; *J. Biol. Chem.* 273:6525–6532, 1998; *Am J. Physiol. Cell Physiol.* 282:C935–46, 2002.

FOR FURTHER INFORMATION CONTACT: Director, Office of Research Integrity, 1101 Wootton Parkway, Suite 750, Rockville, MD 20852, (240) 453–8200.

David E. Wright,

Director, Office of Research Integrity.

[FR Doc. 2012–28209 Filed 11–19–12; 8:45 am]

BILLING CODE 4150–31–P

DEPARTMENT OF HEALTH AND HUMAN SERVICES

Centers for Disease Control and Prevention

Request for Nominations for Candidates To Serve on the National Public Health Surveillance and Biosurveillance Advisory Committee (NPHSBAC)

Correction: This notice was published in the **Federal Register** on November 6, 2012, Volume 77, Number 215, page 66620. Paragraphs three through six of the notice should read as follows:

Federal employees will not be considered for membership. Members may be invited to serve up to four-year terms. Consideration is given to representation from diverse geographic areas, both genders, all ethnic and racial groups, and the disabled. Nominees must be U.S. citizens.

The following information must be submitted for each candidate: name, affiliation, address, telephone number, and current curriculum vitae. Email addresses are requested if available.

Nominations should be sent, in writing, and postmarked by November 30, 2012 to: Vernellia Johnson, Management and Program Analyst, Public Health Surveillance and Informatics Program Office, Centers for Disease Control and Prevention, Office of Surveillance, Epidemiology and Laboratory Services, 1600 Clifton Road NE., MS E–97, Atlanta, Georgia 30333 or via email to *hft9@cdc.gov*. Telephone and facsimile submissions cannot be accepted.

The Director, Management Analysis and Services Office, has been delegated the authority to sign **Federal Register** notices pertaining to announcements of meetings and other committee management activities for both the Centers for Disease Control and Prevention and the Agency for Toxic Substances and Disease Registry.

Dated: November 13, 2012.

Elaine L. Baker,

Director, Management Analysis and Services Office Centers for Disease Control and Prevention.

[FR Doc. 2012–28172 Filed 11–19–12; 8:45 am]

BILLING CODE 4163–18–P

DEPARTMENT OF HEALTH AND HUMAN SERVICES

Administration for Children and Families

Submission for OMB Review; Comment Request

Title: Head Start Eligibility Verification.

OMB No.: 0970–0374.

Description: The requirements for establishing proof of eligibility for the enrollment of children in Head Start programs are documented in 45 CFR 1305.4 (e). Each child's record must include a signed document by an employee identifying those documents which were reviewed to determine eligibility. Presently there is no uniform document which the employee must sign. This form will be used to facilitate an efficient and accurate determination of childrens' eligibility for Head Start enrollment.

Respondents: Head Start grantees.

ANNUAL BURDEN ESTIMATES

Instrument	Number of respondents	Number of responses per respondent	Average burden hours per response	Total burden hours
Head Start Eligibility Verification	1,600	750	0.08	96,000

Estimated Total Annual Burden Hours: 96,000.

Additional Information: Copies of the proposed collection may be obtained by writing to the Administration for Children and Families, Office of Planning, Research and Evaluation, 370 L'Enfant Promenade SW., Washington, DC 20447, Attn: ACF Reports Clearance Officer. All requests should be identified by the title of the information collection. Email address: *infocollection@acf.hhs.gov*.

OMB Comment: OMB is required to make a decision concerning the collection of information between 30 and 60 days after publication of this document in the **Federal Register**. Therefore, a comment is best assured of having its full effect if OMB receives it within 30 days of publication. Written comments and recommendations for the proposed information collection should be sent directly to the following: Office of Management and Budget, Paperwork Reduction Project, Fax: 202–395–7285, Email: *oira_submission@omb.eop.gov,* Attn: Desk Officer for the Administration for Children and Families.

Robert Sargis,

Reports Clearance Officer.

[FR Doc. 2012–28138 Filed 11–19–12; 8:45 am]

BILLING CODE 4184–01–P

DEPARTMENT OF HEALTH AND HUMAN SERVICES

Administration for Children and Families

Notice of Allotment Percentages to States for Child Welfare Services State Grants

AGENCY: Administration on Children, Youth and Families, Administration for Children and Families, Department of Health and Human Services.

ACTION: Biennial publication of allotment percentages for States under the Title IV–B subpart 1, Child Welfare Services State Grants Program (CFDA No. 93.645).

SUMMARY: As required by section 423(c) of the Social Security Act (42 U.S.C. 623(c)), the Department is publishing the allotment percentage for each State under the Title IV–B Subpart 1, Child Welfare Services State Grants Program. Under section 423(a), the allotment percentages are one of the factors used in the computation of the Federal grants awarded under the Program.

DATES: *Effective Date:* The allotment percentages shall be effective for Fiscal Years 2014 and 2015.

FOR FURTHER INFORMATION CONTACT: Deborah Bell, Grants Fiscal Management Specialist, Office of Grants Management, Office of Administration, Administration for Children and Families, telephone (202) 401–4611.

SUPPLEMENTARY INFORMATION: The allotment percentage for each State is determined on the basis of paragraphs (b) and (c) of section 423 of the Act. These figures are available on the ACF homepage on the Internet: *http://www.acf.dhhs.gov/programs/cb/.* The allotment percentage for each State is as follows:

State	Allotment percentage
Alabama	57.91
Alaska	44.94
Arizona	57.33
Arkansas	59.25
California	47.26
Colorado	46.95
Connecticut	30.73
Delaware	50.17
District of Columbia	30.00
Florida	52.15
Georgia	56.50
Hawaii	48.28
Idaho	60.31
Illinois	47.24
Indiana	57.13
Iowa	51.66
Kansas	51.07
Kentucky	59.06
Louisiana	53.44
Maine	53.78
Maryland	38.87
Massachusetts	35.75
Michigan	56.74
Minnesota	46.65
Mississippi	61.31
Missouri	54.07
Montana	56.75
Nebraska	49.86
Nevada	54.72
New Hampshire	44.88
New Jersey	36.63
New Mexico	58.63
New York	38.75
North Carolina	56.40
North Dakota	46.22
Ohio	54.68
Oklahoma	55.29
Oregon	54.75
Pennsylvania	49.18
Rhode Island	47.35
South Carolina	59.57
South Dakota	49.19
Tennessee	56.09
Texas	52.09
Utah	59.41
Vermont	50.06
Virginia	44.51
Washington	46.91
West Virginia	59.92
Wisconsin	52.31
Wyoming	43.29
American Samoa	70.00
Guam	70.00
N. Mariana Islands	70.00
Puerto Rico	70.00
Virgin Islands	70.00

Dated: November 1, 2012.

Bryan Samuels,

Commissioner, Administration on Children, Youth and Families.

[FR Doc. 2012–28089 Filed 11–19–12; 8:45 am]

BILLING CODE 4184–01–P

DEPARTMENT OF HEALTH AND HUMAN SERVICES

Food and Drug Administration

[Docket No. FDA–2012–N–1131]

Agency Information Collection Activities; Proposed Collection; Comment Request; New Animal Drug Applications and Supporting Regulations, and Form FDA 356V

AGENCY: Food and Drug Administration, HHS.

ACTION: Notice.

SUMMARY: The Food and Drug Administration (FDA) is announcing an opportunity for public comment on the proposed collection of certain information by the Agency. Under the Paperwork Reduction Act of 1995 (the PRA), Federal Agencies are required to publish notice in the **Federal Register** concerning each proposed collection of information, including each proposed extension of an existing collection of information, and to allow 60 days for public comment in response to the notice. This notice solicits comments on paperwork associated with applications for new animal drugs.

DATES: Submit either electronic or written comments on the collection of information by January 22, 2013.

ADDRESSES: Submit electronic comments on the collection of information to *http://www.regulations.gov.* Submit written comments on the collection of information to the Division of Dockets Management (HFA–305), Food and Drug Administration, 5630 Fishers Lane, Rm. 1061, Rockville, MD 20852. All comments should be identified with the docket number found in brackets in the heading of this document.

FOR FURTHER INFORMATION CONTACT: Jonna Capezzuto, Office of Information Management, Food and Drug Administration, 1350 Piccard Dr., PIFO, Rm. 410B, Rockville, MD 20850, 301–796–3794.

SUPPLEMENTARY INFORMATION: Under the PRA (44 U.S.C. 3501–3520), Federal Agencies must obtain approval from the Office of Management and Budget (OMB) for each collection of information they conduct or sponsor. ''Collection of information'' is defined in 44 U.S.C. 3502(3) and 5 CFR 1320.3(c) and includes Agency requests or requirements that members of the public submit reports, keep records, or provide information to a third party. Section 3506(c)(2)(A) of the PRA (44 U.S.C. 3506(c)(2)(A)) requires Federal Agencies to provide a 60-day notice in the **Federal Register** concerning each proposed collection of information, including each proposed extension of an existing collection of information, before submitting the collection to OMB for approval. To comply with this requirement, FDA is publishing notice of the proposed collection of information set forth in this document.

With respect to the following collection of information, FDA invites comments on these topics: (1) Whether the proposed collection of information is necessary for the proper performance of FDA's functions, including whether the information will have practical utility; (2) the accuracy of FDA's estimate of the burden of the proposed collection of information, including the validity of the methodology and assumptions used; (3) ways to enhance the quality, utility, and clarity of the information to be collected; and (4) ways to minimize the burden of the collection of information on respondents, including through the use of automated collection techniques, when appropriate, and other forms of information technology.

Presubmission Conferences, New Animal Drug Applications and Supporting Regulations and Guidance #152, and Form FDA 356V—21 CFR 514.5, 514.1, 514.4, and 514.8 (OMB Control Number 0910–0032)—Extension

Under section 512(b)(3) of the Federal Food, Drug, and Cosmetic Act (the FD&C Act) (21 U.S.C. 360b(b)(3)), any person intending to file a new animal drug application (NADA) or supplemental NADA or a request for an investigational exemption under section 512(j) of the FD&C Act is entitled to one or more conferences with FDA to reach an agreement acceptable to FDA establishing a submission or investigational requirement. FDA and industry have found that these meetings have increased the efficiency of the drug development and drug review processes.

Section 514.5 of Title 21 of the Code of Federal Regulations describes the procedures for requesting, conducting, and documenting presubmission conferences. Section 514.5(b) describes the information that must be included in a letter submitted by a potential applicant requesting a presubmission conference, including a proposed agenda and a list of expected participants. Section 514.5(d) describes the information that must be provided by the potential applicant to FDA at least 30 days prior to a presubmission conference. This information includes a detailed agenda, a copy of any materials to be presented at the conference, a list of proposed indications and, if available, a copy of the proposed labeling for the product under consideration, and a copy of any background material that provides scientific rationale to support the potential applicant's position on issues listed in the agenda for the conference. Section 514.5(f) discusses the content of the memorandum of conference that will be prepared by FDA and gives the potential applicant an opportunity to seek correction to or clarification of the memorandum.

Under section 512(b)(1) of the FD&C Act, any person may file a NADA seeking approval to legally market a new animal drug. Section 512(b)(1) sets forth the information required to be submitted in a NADA. FDA allows applicants to submit a complete NADA or to submit information in support of a NADA for phased review followed by submission of an administrative NADA when FDA finds all the applicable technical sections are complete.

Section 514.1 of Title 21 of the Code of Federal Regulations interprets section 512(b)(1) of the FD&C Act and further describes the information that must be submitted as part of a NADA and the manner and form in which the NADA must be assembled and submitted. The application must include safety and effectiveness data, proposed labeling, product manufacturing information, and where necessary, complete information on food safety (including microbial food safety) and any methods used to determine residues of drug chemicals in edible tissue from food producing animals. Guidance #152 outlines a risk assessment approach for evaluating the microbial food safety of antimicrobial new animal drugs. FDA requests that an applicant accompany NADAs, supplemental NADAs, and requests for phased review of data to support NADAs, with the Form FDA 356V to ensure efficient and accurate processing of information to support new animal drug approval.

FDA estimates the burden of the collections of information as follows:

TABLE 1—NADAS: ESTIMATED ANNUAL REPORTING BURDEN [1]

21 CFR Section/FDA Form No.	Number of respondents	Number of responses per respondent	Total annual responses	Average burden per response	Total hours
514.5(b), (d), and (f) Requesting presubmission conferences	169	0.41	69	50	3,450
514.1 and 514.6 Applications and amended applications	169	0.07	12	212	2,544
514.8(b) Manufacturing changes to an approved application	169	2.22	375	35	13,125
514.8(c)(1) Labeling and other changes to an approved application	169	0.06	10	71	710
514.8(c)(2) and (3) Labeling and other changes to an approved application	169	0.72	121	20	2,420
514.11 Submission of data, studies and other information	169	0.08	14	1	14
558.5(i) Requirements for liquid medicated feed	169	0.01	1.7	5	8.5
514.1(b)(8) and 514.8(c)(1) [2] Evidence to establish safety and effectiveness	169	0.15	25	90	2,250
FDA Form 356V	169	4.37	739	5	3,695
Total					28,217

[1] There are no capital costs or operating and maintenance costs associated with this collection of information.
[2] NADAs and supplements regarding antimicrobial animal drugs that use a recommended approach to assessing antimicrobial concerns as part of the overall preapproval safety evaluation.

Based on the number of sponsors subject to animal drug user fees, FDA estimates that there was an average of 169 annual respondents during the 5 fiscal years, from October 1, 2008 through September 30, 2012, on which these estimates were made. We use this estimate consistently throughout the table and calculate the ''total annual responses'' by multiplying the number of responses per respondent by number of respondents.

Dated: November 15, 2012.

Leslie Kux,

Assistant Commissioner for Policy.

[FR Doc. 2012–28199 Filed 11–19–12; 8:45 am]

BILLING CODE 4160–01–P

DEPARTMENT OF HEALTH AND HUMAN SERVICES

Food and Drug Administration

[Docket No. FDA–2012–D–0847]

Draft Guidance for IRBs, Clinical Investigators, and Sponsors: IRB Responsibilities for Reviewing the Qualifications of Investigators, Adequacy of Research Sites, and the Determination of Whether an IND/IDE Is Needed; Availability

AGENCY: Food and Drug Administration, HHS.

ACTION: Notice.

SUMMARY: The Food and Drug Administration (FDA) is announcing the availability of a draft guidance entitled ''Guidance for IRBs, Clinical Investigators, and Sponsors: IRB Responsibilities for Reviewing the Qualifications of Investigators, Adequacy of Research Sites, and the Determination of Whether an IND/IDE Is Needed.'' The draft guidance announced in this notice is intended to assist institutional review boards (IRBs), clinical investigators, and sponsors involved in clinical investigations of FDA-regulated products in fulfilling responsibilities related to reviewing the qualifications of investigators, adequacy of research sites, and the determination of whether an investigational new drug (IND) application or investigational device exemption (IDE) is needed in order to assure the protection of the rights and welfare of human subjects in clinical investigations.

DATES: Although you can comment on any guidance at any time (see 21 CFR 10.115(g)(5)), to ensure that the Agency considers your comment on this draft guidance before it begins work on the final version of the guidance, submit either electronic or written comments on the draft guidance by January 22, 2013.

ADDRESSES: Submit written requests for single copies of this draft guidance to the Division of Drug Information, Center for Drug Evaluation and Research, Food and Drug Administration, 10903 New Hampshire Ave., Bldg. 51, Rm. 2201, Silver Spring, MD 20993–0002 (1–888–463–6332 or 301–796–3400); or the Office of Communication, Outreach and Development (HFM–40), Center for Biologics Evaluation and Research, Food and Drug Administration, 1401 Rockville Pike, Suite 200N, Rockville, MD 20852–1448 (1–800–835–4709 or 301–827–1800); or the Division of Small Manufacturers, International and Consumer Assistance, Center for Devices and Radiological Health, Food and Drug Administration, 10903 New Hampshire Ave., Bldg. 66, Rm. 4622, Silver Spring, MD 20993 (1–800–638–2041 or 301–796–7100). Send one self-addressed adhesive label to assist the office in processing your requests. See the **SUPPLEMENTARY INFORMATION** section for electronic access to the draft guidance document.

Submit electronic comments on the draft guidance to *http://www.regulations.gov*. Submit written comments to the Division of Dockets Management (HFA–305), Food and Drug Administration, 5630 Fishers Lane, Rm. 1061, Rockville, MD 20852.

FOR FURTHER INFORMATION CONTACT: Doreen Kezer, Office of Good Clinical Practice, Food and Drug Administration, 10903 New Hampshire Ave., Bldg. 32, Rm. 5109, Silver Spring, MD 20993, 301–796–8524.

SUPPLEMENTARY INFORMATION:

I. Background

FDA is announcing the availability of a draft guidance entitled ''Guidance for IRBs, Clinical Investigators, and Sponsors: IRB Responsibilities for Reviewing the Qualifications of Investigators, Adequacy of Research Sites, and the Determination of Whether an IND/IDE Is Needed.'' This guidance is intended to assist IRBs, clinical investigators, and sponsors involved in clinical investigations of FDA-regulated

products in determining that the proposed research satisfies the criteria for approval contained in 21 CFR 56.111, that ''* * * the risks to subjects are minimized * * * and reasonable in relation to anticipated benefits, if any, to subjects * * *.'' In particular, the guidance addresses the IRB's role in reviewing: (1) The qualifications of investigators, (2) the adequacy of the research site, and (3) the determination of whether an IND/IDE is needed. When finalized, this guidance will supersede Question 56 in FDA's January 1998 guidance entitled ''Institutional Review Boards Frequently Asked Questions—Information Sheet Guidance for Institutional Review Boards and Clinical Investigators.'' [1]

FDA is issuing this as a draft guidance. Although many of these recommendations have appeared in other FDA guidance documents, FDA has compiled the information here in order to assure that all IRBs are aware of and have access to it. The guidance also explains how IRBs may efficiently fulfill these important responsibilities.

To enhance human subject protection and reduce regulatory burden, the Department of Health and Human Services (HHS) Office for Human Research Protections (OHRP) and FDA have been actively working to harmonize the Agencies' regulatory requirements and guidance for human subject research. This guidance document was developed as a part of these efforts and in consultation with OHRP. In addition, FDA acknowledges HHS's publication of the advanced notice of proposed rulemaking (ANPRM), ''Human Subjects Research Protections: Enhancing Protections for Research Subjects and Reducing Burden, Delay, and Ambiguity for Investigators,'' in the **Federal Register** of July 26, 2011 (76 FR 44512). In the ANPRM, HHS sought comment on whether the Federal human subject protection regulations should be modified in a number of ways. In finalizing this draft guidance, ''IRB Responsibilities for Reviewing the Qualifications of Investigators, Adequacy of Research Sites, and the Determination of Whether an IND/IDE Is Needed,'' FDA intends to consider relevant public comments submitted in response to both the draft guidance and the ANPRM.

The draft guidance is being issued consistent with FDA's Good Guidance Practices (GGPs) regulation (21 CFR 10.115). The draft guidance, when finalized, will represent FDA's current thinking on this topic. It does not create or confer any rights for or on any person and does not operate to bind FDA or the public. An alternative approach may be used if such approach satisfies the requirements of the applicable statutes and regulations.

[1] See *http://www.fda.gov/RegulatoryInformation/Guidances/ucm126420.htm#GeneralQuestions.*

II. The Paperwork Reduction Act of 1995

This draft guidance includes information collections provisions that are subject to review by the Office of Management and Budget (OMB) under the Paperwork Reduction Act (PRA) of 1995 (44 U.S.C. 3501–3520). The collections of information referenced in this guidance that are related to IRB recordkeeping requirements under 21 CFR 56.115 have been approved under OMB control number 0910–0130; the collections of information under 21 CFR Part 312 have been approved under OMB control number 0910–0014; and the collections of information under 21 CFR Part 812 have been approved under OMB control number 0910–0078. In accordance with the PRA, prior to publication of any final guidance document, FDA intends to solicit public comment and obtain OMB approval for any information collections recommended in this guidance that are new or that would represent material modifications to these previously approved collections of information found in FDA regulations.

III. Comments

Interested persons may submit either written comments regarding this document to the Division of Dockets Management (see **ADDRESSES**) or electronic comments to *http://www.regulations.gov.* It is only necessary to send one set of comments. Identify comments with the docket number found in brackets in the heading of this document. Received comments may be seen in the Division of Dockets Management between 9 a.m. and 4 p.m., Monday through Friday.

IV. Electronic Access

Persons with access to the Internet may obtain the document at *http://www.fda.gov/ScienceResearch/SpecialTopics/RunningClinicalTrials/ProposedRegulationsandDraftGuidances/default.htm* or *http://www.regulations.gov.*

Dated: November 15, 2012.

Leslie Kux,

Assistant Commissioner for Policy.

[FR Doc. 2012–28149 Filed 11–19–12; 8:45 am]

BILLING CODE 4160–01–P

DEPARTMENT OF HEALTH AND HUMAN SERVICES

Food and Drug Administration

[Docket No. FDA–2010–D–0643]

Draft Guidance for Industry on Electronic Source Data in Clinical Investigations; Availability

AGENCY: Food and Drug Administration, HHS.

ACTION: Notice.

SUMMARY: The Food and Drug Administration (FDA) is announcing the availability of a draft guidance for industry entitled ''Electronic Source Data in Clinical Investigations.'' This document revises and updates the draft guidance entitled ''Electronic Source Documentation in Clinical Investigations.'' This revised draft document provides guidance to sponsors, contract research organizations (CROs), data management centers, clinical investigators, and others involved in capturing, reviewing, and archiving electronic source data in FDA-regulated clinical investigations. The revised draft guidance promotes capturing source data in electronic form, and it is intended to assist in ensuring the reliability, quality, integrity, and traceability of electronic source data.

DATES: Although you can comment on any guidance at any time (see 21 CFR 10.115(g)(5)), to ensure that FDA considers your comment on the revised draft guidance before it begins work on the final version of the guidance, submit either electronic or written comments on the draft guidance within January 22, 2013.

ADDRESSES: Submit written requests for single copies of the revised draft guidance to the Division of Drug Information, Center for Drug Evaluation and Research, Food and Drug Administration, 10903 New Hampshire Ave., Bldg. 51, Rm. 2201, Silver Spring, MD 20993–0002; Office of Communication, Outreach and Development (HFM–40), Center for Biologics Evaluation and Research, Food and Drug Administration, 1401 Rockville Pike, Suite 200N, Rockville, MD 20852–1448; Division of Small Manufacturers, International and Consumer Assistance, Center for Devices and Radiological Health, Food and Drug Administration, 10903 New Hampshire Ave., Bldg. 66, Rm. 4613, Silver Spring, MD 20993–0002; and Office of Critical Path Programs, Office of the Commissioner, Food and Drug Administration, 10903 New Hampshire Ave., Bldg. 32, Rm. 4173, Silver Spring,

MD 20993–0002. Send one self-addressed adhesive label to assist that office in processing your requests. See the **SUPPLEMENTARY INFORMATION** section for electronic access to the draft guidance document.

Submit electronic comments on the guidance to *http://www.regulations.gov.* Submit written comments to the Division of Dockets Management (HFA–305), Food and Drug Administration, 5630 Fishers Lane, Rm. 1061, Rockville, MD 20852.

FOR FURTHER INFORMATION CONTACT: Ronald Fitzmartin, Office of Planning and Informatics, Center for Drug Evaluation and Research, Food and Drug Administration, 10903 New Hampshire Ave., Bldg. 51, Rm. 1160, Silver Spring, MD 20993–0002, 301–796–5333.

SUPPLEMENTARY INFORMATION:

I. Background

FDA is announcing the availability of a draft guidance for industry entitled ''Electronic Source Data in Clinical Investigations.'' This document revises and updates the draft guidance entitled ''Electronic Source Documentation in Clinical Investigations.'' This revised draft document provides guidance to sponsors, CROs, data management centers, clinical investigators, and others involved in capturing, reviewing, and archiving electronic source data in FDA-regulated clinical investigations. The revised draft guidance promotes capturing source data in electronic form, and it is intended to assist in ensuring the reliability, quality, integrity, and traceability of electronic source data.

With the use of computerized systems for capturing clinical study data, it is common to find at least some source data recorded electronically. Common examples include clinical data initially recorded in electronic health records maintained by hospitals and institutions, electronic laboratory reports, electronic medical images from devices, and electronic diaries provided by study subjects.

Capturing source data electronically should help to: (1) Eliminate unnecessary duplication of data; (2) reduce the possibility for transcription errors; (3) encourage entering source data at the time of a subject's visit; (4) eliminate transcribing source data before entering the data into an electronic data capture system; (5) promote real-time data access for review; and (6) ensure the accuracy and completeness of the data.

In the **Federal Register** of January 7, 2011 (76 FR 1173), FDA announced the availability of the draft guidance entitled ''Electronic Source Documentation in Clinical Investigations.'' Based on public comment, we have revised the January 2011 draft guidance to clarify a number of points made by industry. The Agency is publishing the draft guidance as a revised draft guidance to collect additional public comments. This revised draft guidance addresses source data (from clinical investigations) used to fill the predefined fields in an electronic case report form (eCRF), according to protocol. The draft guidance discusses the following topics related to electronic source data:

- Identifying and specifying authorized source data originators;
- Creating data element identifiers to facilitate sponsors, FDA, and other authorized parties in examining the audit trail of data;
- Capturing source data into the eCRF using either manual or electronic capture methods; and
- Investigator responsibilities with respect to reviewing and retaining electronic data.

The revised draft guidance is being issued consistent with FDA's good guidance practices regulation (21 CDR 10.115). The draft guidance, when finalized, will represent the Agency's current thinking on capturing, using, and archiving electronic data in FDA-regulated clinical investigations. It does not create or confer any rights for or on any person and does not operate to bind FDA or the public. An alternative approach may be used if such approach satisfies the requirements of the applicable statutes and regulations.

II. Comments

Interested persons may submit either written comments regarding this document to the Division of Dockets Management (see **ADDRESSES**) or electronic comments to *http://www.regulations.gov.* It is only necessary to send one set of comments. Identify comments with the docket number found in brackets in the heading of this document. Received comments may be seen in the Division of Dockets Management between 9 a.m. and 4 p.m., Monday through Friday, and will be posted to the docket at *http://www.regulations.gov.*

III. Paperwork Reduction Act of 1995

The draft guidance refers to collections of information that are subject to review by the Office of Management and Budget (OMB) under the Paperwork Reduction Act of 1995 (44 U.S.C. 3501–3520). The draft guidance pertains to sponsors, clinical investigators, contract research organizations, and others involved in capturing, reviewing, and archiving electronic source data in FDA-regulated clinical investigations and who send certain information to FDA or others, or keep certain records and make them available to FDA inspectors. The information collection discussed in the draft guidance is contained in our investigational new drug regulations (21 CFR 312) and approved under OMB control number 0910–0014, including §§ 312.62(b) and 312.58(a). In addition, the collection of information in 21 CFR part 11, as discussed in the draft guidance, is approved under OMB control number 0910–0303. OMB approval of the information collection in the guidance entitled ''Computerized Systems Used in Clinical Investigations,'' as mentioned in the draft guidance, is discussed in the May 10, 2007 (72 FR 26638), **Federal Register** Notice of Availability of that guidance. The capture, review, and archiving of electronic source data, as described in the draft guidance, would not result in any new costs, including capital costs or operating and maintenance costs, because sponsors and others already have and are experienced with using the computer-based equipment and software necessary to be consistent with the guidance.

IV. Electronic Access

Persons with access to the Internet may obtain the document at *http://www.fda.gov/Drugs/GuidanceComplianceRegulatoryInformation/Guidances/default.htm, http://www.fda.gov/BiologicsBloodVaccines/GuidanceComplianceRegulatoryInformation/default.htm, http://www.fda.gov/MedicalDevices/DeviceRegulationandGuidance/GuidanceDocuments/default.htm, http://www.fda.gov/RegulatoryInformation/Guidances/default.htm,* or *http://www.regulations.gov.*

Dated: November 15, 2012.

Leslie Kux,

Assistant Commissioner for Policy.

[FR Doc. 2012–28198 Filed 11–19–12; 8:45 am]

BILLING CODE 4160–01–P

DEPARTMENT OF HEALTH AND HUMAN SERVICES

Food and Drug Administration

[Docket No. FDA–2011–D–0784]

Guidance for Industry on Evaluating the Effectiveness of Anticoccidial Drugs in Food-Producing Animals; Availability

AGENCY: Food and Drug Administration, HHS.

ACTION: Notice.

SUMMARY: The Food and Drug Administration (FDA) is announcing the availability of guidance for industry #217 entitled ''Evaluating the Effectiveness of Anticoccidial Drugs in Food-Producing Animals.'' The guidance provides guidance to industry for designing and conducting clinical effectiveness studies and describes criteria that the Center for Veterinary Medicine (CVM) thinks are the most appropriate for the evaluation of the effectiveness of anticoccidial drugs intended for use in poultry and other food-producing animals. The guidance suggests times during the evaluation of effectiveness when sponsors may wish to consult with CVM.

DATES: Submit either electronic or written comments on Agency guidances at any time.

ADDRESSES: Submit written requests for single copies of the guidance to the Communications Staff (HFV–12), Center for Veterinary Medicine, Food and Drug Administration, 7519 Standish Pl., Rockville, MD 20855. Send one self-addressed adhesive label to assist that office in processing your requests. See the **SUPPLEMENTARY INFORMATION** section for electronic access to the guidance document.

Submit electronic comments on the guidance to *http://www.regulations.gov.* Submit written comments to the Division of Dockets Management (HFA–305), Food and Drug Administration, 5630 Fishers Lane, Rm. 1061, Rockville, MD 20852.

FOR FURTHER INFORMATION CONTACT: Emily R. Smith, Center for Veterinary Medicine (HFV–135), Food and Drug Administration, 7500 Standish Pl., Rockville, MD 20855, 240–276–8344, *emily.smith2@fda.hhs.gov.*

SUPPLEMENTARY INFORMATION:

I. Background

In the **Federal Register** of November 23, 2011 (76 FR 72422), FDA published the notice of availability for a draft guidance entitled ''Evaluating the Effectiveness of Anticoccidial Drugs in Food-Producing Animals,'' giving interested persons until January 23, 2012, to comment on the draft guidance. FDA received one comment on the draft guidance and that comment was considered as the guidance was finalized. No changes other than editorial changes were made to improve clarity. This guidance for industry #217 supersedes the CVM draft guidance for industry #40, entitled ''Draft Guideline for the Evaluation of The Efficacy of Anticoccidial Drugs and Anticoccidial Drug Combinations in Poultry,'' dated April 1992. The guidance announced in this notice finalizes the draft guidance dated November 23, 2011.

II. Significance of Guidance

This level 1 guidance is being issued consistent with FDA's good guidance practices regulation (21 CFR 10.115). The guidance represents the Agency's current thinking on the topic. It does not create or confer any rights for or on any person and does not operate to bind FDA or the public. An alternative approach may be used if such approach satisfies the requirements of the applicable statutes and regulations.

III. Paperwork Reduction Act of 1995

This guidance refers to previously approved collections of information found in FDA regulations. These collections of information are subject to review by the Office of Management and Budget (OMB) under the Paperwork Reduction Act of 1995 (44 U.S.C. 3501–3520). The collections of information in this guidance have been approved under OMB control numbers 0910–0032 and 0910–0117.

IV. Comments

Interested persons may submit either written comments regarding this document to the Division of Dockets Management (see **ADDRESSES**) or electronic comments to *http://www.regulations.gov.* It is only necessary to send one set of comments. Identify comments with the docket number found in brackets in the heading of this document. Received comments may be seen in the Division of Dockets Management between 9 a.m. and 4 p.m., Monday through Friday, and will be posted to the docket at *http://www.regulations.gov.*

V. Electronic Access

Persons with access to the Internet may obtain the guidance at either *http://www.fda.gov/AnimalVeterinary/GuidanceComplianceEnforcement/GuidanceforIndustry/default.htm* or *http://www.regulations.gov.*

Dated: November 15, 2012.

Leslie Kux,

Assistant Commissioner for Policy.

[FR Doc. 2012–28156 Filed 11–19–12; 8:45 am]

BILLING CODE 4160–01–P

DEPARTMENT OF HEALTH AND HUMAN SERVICES

Food and Drug Administration

[Docket No. FDA–2011–D–0436]

International Conference on Harmonisation; Guidance on Q11 Development and Manufacture of Drug Substances; Availability

AGENCY: Food and Drug Administration, HHS.

ACTION: Notice.

SUMMARY: The Food and Drug Administration (FDA) is announcing the availability of a guidance entitled ''Q11 Development and Manufacture of Drug Substances.'' The guidance was prepared under the auspices of the International Conference on Harmonisation of Technical Requirements for Registration of Pharmaceuticals for Human Use (ICH). The guidance describes approaches to developing and understanding the manufacturing process of a drug substance and provides guidance on what information should be provided in certain sections of the Common Technical Document (CTD). The guidance is intended to harmonize the scientific and technical principles relating to the description and justification of the development and manufacturing process of drug substances (both chemical entities and biotechnological/biological entities) to enable a consistent approach for providing and evaluating this information across the three regions. The discussion of principles in the guidance is intended to apply only to the manufacture of drug substance, not the manufacture of finished drug products.

DATES: Submit either electronic or written comments on Agency guidances at any time.

ADDRESSES: Submit written requests for single copies of the guidance to the Division of Drug Information (HFD–240), Center for Drug Evaluation and Research, Food and Drug Administration, 10903 New Hampshire Ave., Bldg. 51, Rm. 2201, Silver Spring, MD 20993–0002, or the Office of Communication, Outreach and Development (HFM–40), Center for Biologics Evaluation and Research

(CBER), Food and Drug Administration, 1401 Rockville Pike, Rockville, MD 20852–1448. Send one self-addressed adhesive label to assist the office in processing your requests. The guidance may also be obtained by mail by calling CBER at 1–800–835–4709 or 301–827–1800. See the **SUPPLEMENTARY INFORMATION** section for electronic access to the guidance document.

Submit electronic comments on the guidance to *http://www.regulations.gov*. Submit written comments to the Division of Dockets Management (HFA–305), Food and Drug Administration, 5630 Fishers Lane, rm. 1061, Rockville, MD 20852.

FOR FURTHER INFORMATION CONTACT: Regarding the guidance:

John Smith, Center for Drug Evaluation and Research, Food and Drug Administration, 10903 New Hampshire Ave., Bldg. 21, rm. 2619, Silver Spring, MD 20993–0002, 301–796–1757; or

Stephen Ripley, Center for Biologics Evaluation and Research (HFM–17), Food and Drug Administration, 1401 Rockville Pike, suite 200N, Rockville, MD 20852–1448, 301–827–6210.

Regarding the ICH:

Michelle Limoli, Center for Drug Evaluation and Research, International Programs, Food and Drug Administration, 10903 New Hampshire Ave., Bldg. 51, rm. 3342, Silver Spring, MD 20993–0002, 301–796–8377.

SUPPLEMENTARY INFORMATION:

I. Background

In recent years, many important initiatives have been undertaken by regulatory authorities and industry associations to promote international harmonization of regulatory requirements. FDA has participated in many meetings designed to enhance harmonization and is committed to seeking scientifically based harmonized technical procedures for pharmaceutical development. One of the goals of harmonization is to identify and then reduce differences in technical requirements for drug development among regulatory Agencies.

ICH was organized to provide an opportunity for harmonization initiatives to be developed with input from both regulatory and industry representatives. FDA also seeks input from consumer representatives and other stakeholders. ICH is concerned with harmonization of technical requirements for the registration of pharmaceutical products among three regions: The European Union, Japan, and the United States. The six ICH sponsors are the European Commission; the European Federation of Pharmaceutical Industries Associations; the Japanese Ministry of Health, Labour, and Welfare; the Japanese Pharmaceutical Manufacturers Association; the Centers for Drug Evaluation and Research and Biologics Evaluation and Research, FDA; and the Pharmaceutical Research and Manufacturers of America. The ICH Secretariat, which coordinates the preparation of documentation, is provided by the International Federation of Pharmaceutical Manufacturers Associations (IFPMA).

The ICH Steering Committee includes representatives from each of the ICH sponsors and the IFPMA, as well as observers from the World Health Organization, Health Canada, and the European Free Trade Area.

In the **Federal Register** of June 29, 2011 (76 FR 38187), FDA published a notice announcing the availability of a draft guidance entitled ''Q11 Development and Manufacture of Drug Substances.'' The notice gave interested persons an opportunity to submit comments by September 1, 2011.

FDA received numerous comments on the draft guidance and those comments were considered as the guidance was finalized. After consideration of the comments and revisions to the guidance, a final draft of the guidance was submitted to the ICH Steering Committee and endorsed by the three participating regulatory Agencies in April 2012. The final document provides guidance on approaches to developing and understanding the manufacturing process of the drug substance and provides guidance on what information should be provided in certain sections of the CTD. A summary of changes includes the following: (1) Revisions to the introduction and process development sections to more strongly emphasize that purification processes play a significant role in drug substance manufacture, (2) revisions to the discussion of design space for chemical entities and biotechnological/biological drug substances, and (3) revisions to the discussion of control strategy. In addition, editorial changes were made to improve clarity.

This guidance is being issued consistent with FDA's good guidance practices regulation (21 CFR 10.115). The guidance represents the Agency's current thinking on this topic. It does not create or confer any rights for or on any person and does not operate to bind FDA or the public. An alternative approach may be used if such approach satisfies the requirements of the applicable statutes and regulations.

II. Comments

Interested persons may submit either written comments regarding this document to the Division of Dockets Management (see **ADDRESSES**) or electronic comments to *http://www.regulations.gov*. It is only necessary to send one set of comments. Identify comments with the docket number found in brackets in the heading of this document. Received comments may be seen in the Division of Dockets Management between 9 a.m. and 4 p.m., Monday through Friday, and will be posted to the docket at *http://www.regulations.gov*.

III. Electronic Access

Persons with access to the Internet may obtain the document at *http://www.regulations.gov, http://www.fda.gov/Drugs/GuidanceComplianceRegulatoryInformation/Guidances/default.htm*,or *http://www.fda.gov/BiologicsBloodVaccines/GuidanceComplianceRegulatoryInformation/Guidances/default.htm.*

Dated: November 14, 2012.

Leslie Kux,

Assistant Commissioner for Policy.

[FR Doc. 2012–28142 Filed 11–19–12; 8:45 am]

BILLING CODE 4160–01–P

DEPARTMENT OF HEALTH AND HUMAN SERVICES

Food and Drug Administration

[Docket No. FDA–2012–N–0001]

Pulmonary-Allergy Drugs Advisory Committee; Notice of Meeting

AGENCY: Food and Drug Administration, HHS.

ACTION: Notice.

This notice announces a forthcoming meeting of a public advisory committee of the Food and Drug Administration (FDA). The meeting will be open to the public.

Name of Committee: Pulmonary-Allergy Drugs Advisory Committee.

General Function of the Committee: To provide advice and recommendations to the Agency on FDA's regulatory issues.

Date and Time: The meeting will be held on January 29, 2013, from 8 a.m. to 5 p.m.

Location: FDA White Oak Campus, 10903 New Hampshire Ave., Building 31 Conference Center, the Great Room (Rm. 1503), Silver Spring, MD 20993–0002. Information regarding special accommodations due to a disability,

visitor parking, and transportation may be accessed at: *http://www.fda.gov/AdvisoryCommittees/default.htm;* under the heading ''Resources for You,'' click on ''Public Meetings at the FDA White Oak Campus.'' Please note that visitors to the White Oak Campus must enter through Building 1.

Contact Person: Cindy Hong, Center for Drug Evaluation and Research, Food and Drug Administration, 10903 New Hampshire Ave., Bldg. 31, Rm. 2417, Silver Spring, MD 20993–0002, 301–796–9001, Fax: 301–847–8533, email: *PADAC@fda.hhs.gov,* or FDA Advisory Committee Information Line, 1–800–741–8138 (301–443–0572 in the Washington, DC area). A notice in the **Federal Register** about last minute modifications that impact a previously announced advisory committee meeting cannot always be published quickly enough to provide timely notice. Therefore, you should always check the Agency's Web site at *http://www.fda.gov/AdvisoryCommittees/default.htm* and scroll down to the appropriate advisory committee meeting link, or call the advisory committee information line to learn about possible modifications before coming to the meeting.

Agenda: The committee will discuss new drug application (NDA) 203108, for olodaterol (proposed trade name Striverdi Respimat) metered dose inhaler, sponsored by Boehringer Ingelheim, for the proposed indication of long-term, once-daily maintenance bronchodilator treatment of airflow obstruction in patients with chronic obstructive pulmonary disease (COPD), including chronic bronchitis and/or emphysema.

FDA intends to make background material available to the public no later than 2 business days before the meeting. If FDA is unable to post the background material on its Web site prior to the meeting, the background material will be made publicly available at the location of the advisory committee meeting, and the background material will be posted on FDA's Web site after the meeting. Background material is available at *http://www.fda.gov/AdvisoryCommittees/Calendar/default.htm.* Scroll down to the appropriate advisory committee meeting link.

Procedure: Interested persons may present data, information, or views, orally or in writing, on issues pending before the committee. Written submissions may be made to the contact person on or before January 14, 2013. Oral presentations from the public will be scheduled between approximately 1 p.m. and 2 p.m. Those individuals interested in making formal oral presentations should notify the contact person and submit a brief statement of the general nature of the evidence or arguments they wish to present, the names and addresses of proposed participants, and an indication of the approximate time requested to make their presentation on or before January 4, 2013. Time allotted for each presentation may be limited. If the number of registrants requesting to speak is greater than can be reasonably accommodated during the scheduled open public hearing session, FDA may conduct a lottery to determine the speakers for the scheduled open public hearing session. The contact person will notify interested persons regarding their request to speak by January 7, 2013.

Persons attending FDA's advisory committee meetings are advised that the Agency is not responsible for providing access to electrical outlets.

FDA welcomes the attendance of the public at its advisory committee meetings and will make every effort to accommodate persons with physical disabilities or special needs. If you require special accommodations due to a disability, please contact Cindy Hong at least 7 days in advance of the meeting.

FDA is committed to the orderly conduct of its advisory committee meetings. Please visit our Web site at *http://www.fda.gov/AdvisoryCommittees/AboutAdvisoryCommittees/ucm111462.htm* for procedures on public conduct during advisory committee meetings.

Notice of this meeting is given under the Federal Advisory Committee Act (5 U.S.C. app. 2).

Dated: November 15, 2012.

Leslie Kux,

Assistant Commissioner for Policy.

[FR Doc. 2012–28205 Filed 11–19–12; 8:45 am]

BILLING CODE 4160–01–P

DEPARTMENT OF HEALTH AND HUMAN SERVICES

Food and Drug Administration

[Docket No. FDA–2012–N–0001]

Pulmonary-Allergy Drugs Advisory Committee; Notice of Meeting

AGENCY: Food and Drug Administration, HHS.

ACTION: Notice.

This notice announces a forthcoming meeting of a public advisory committee of the Food and Drug Administration (FDA). The meeting will be open to the public.

Name of Committee: Pulmonary-Allergy Drugs Advisory Committee.

General Function of the Committee: To provide advice and recommendations to the Agency on FDA's regulatory issues.

Date and Time: The meeting will be held on January 30, 2013, from 8 a.m. to 4 p.m.

Location: FDA White Oak Campus, 10903 New Hampshire Ave., Bldg. 31 Conference Center, the Great Room (Rm. 1503), Silver Spring, MD 20993–0002. Information regarding special accommodations due to a disability, visitor parking, and transportation may be accessed at: *http://www.fda.gov/AdvisoryCommittees/default.htm;* under the heading ''Resources for You,'' click on ''Public Meetings at the FDA White Oak Campus.'' Please note that visitors to the White Oak Campus must enter through Building 1.

Contact Person: Cindy Hong, Center for Drug Evaluation and Research, Food and Drug Administration, 10903 New Hampshire Ave., Bldg. 31, Rm. 2417, Silver Spring, MD 20993–0002, 301–796–9001, Fax: 301–847–8533, email: *PADAC@fda.hhs.gov,* or FDA Advisory Committee Information Line, 1–800–741–8138 (301–443–0572 in the Washington, DC area). A notice in the **Federal Register** about last minute modifications that impact a previously announced advisory committee meeting cannot always be published quickly enough to provide timely notice. Therefore, you should always check the Agency's Web site at *http://www.fda.gov/AdvisoryCommittees/default.htm* and scroll down to the appropriate advisory committee meeting link, or call the advisory committee information line to learn about possible modifications before coming to the meeting.

Agenda: The committee will discuss the new drug application (NDA) 202049, for mannitol inhalation powder (proposed trade name BRONCHITOL), for oral inhalation sponsored by Pharmaxis, for the proposed indication of management of cystic fibrosis in patients aged 6 years and older to improve pulmonary function.

FDA intends to make background material available to the public no later than 2 business days before the meeting. If FDA is unable to post the background material on its Web site prior to the meeting, the background material will be made publicly available at the location of the advisory committee meeting, and the background material will be posted on FDA's Web site after the meeting. Background material is

available at *http://www.fda.gov/AdvisoryCommittees/Calendar/default.htm.* Scroll down to the appropriate advisory committee meeting link.

Procedure: Interested persons may present data, information, or views, orally or in writing, on issues pending before the committee. Written submissions may be made to the contact person on or before January 14, 2013. Oral presentations from the public will be scheduled between approximately 12:30 p.m. to 1:30 p.m. Those individuals interested in making formal oral presentations should notify the contact person and submit a brief statement of the general nature of the evidence or arguments they wish to present, the names and addresses of proposed participants, and an indication of the approximate time requested to make their presentation on or before January 4, 2013. Time allotted for each presentation may be limited. If the number of registrants requesting to speak is greater than can be reasonably accommodated during the scheduled open public hearing session, FDA may conduct a lottery to determine the speakers for the scheduled open public hearing session. The contact person will notify interested persons regarding their request to speak by January 7, 2013.

Persons attending FDA's advisory committee meetings are advised that the Agency is not responsible for providing access to electrical outlets.

FDA welcomes the attendance of the public at its advisory committee meetings and will make every effort to accommodate persons with physical disabilities or special needs. If you require special accommodations due to a disability, please contact Cindy Hong at least 7 days in advance of the meeting.

FDA is committed to the orderly conduct of its advisory committee meetings. Please visit our Web site at *http://www.fda.gov/AdvisoryCommittees/AboutAdvisoryCommittees/ucm111462.htm* for procedures on public conduct during advisory committee meetings.

Notice of this meeting is given under the Federal Advisory Committee Act (5 U.S.C. app. 2).

Dated: November 15, 2012.

Leslie Kux,

Assistant Commissioner for Policy.

[FR Doc. 2012–28201 Filed 11–19–12; 8:45 am]

BILLING CODE 4160–01–P

DEPARTMENT OF HEALTH AND HUMAN SERVICES

Food and Drug Administration

[Docket No. FDA–2012–N–0974]

Development of Prioritized Therapeutic Area Data Standards; Request for Comments

AGENCY: Food and Drug Administration, HHS.

ACTION: Notice; request for comments.

SUMMARY: The Food and Drug Administration (FDA) is announcing the intent to prioritize and develop therapeutic area data standards to facilitate the conduct of clinical research and the regulatory review of medical products. Therapeutic area disease and domain specific data standards should enable and enhance the ability to integrate, analyze, report, and share regulatory information. FDA has developed a roadmap that provides its current thinking on therapeutic area priorities and has posted it on the FDA Web site. FDA is actively participating with regulated industry, the Clinical Data Interchange Standards Consortium (CDISC), the Critical Path Institute, Health Level 7's (HL7) Clinical Interoperability Council, and other stakeholders to support the development of these therapeutic area standards. The therapeutic area standards will be developed collaboratively based on open, consensus-based data standards development methodology.

DATES: To ensure that the Agency considers your comments, submit either electronic or written comments by January 22, 2013.

ADDRESSES: Submit written requests for a copy of the roadmap to the Division of Drug Information, Center for Drug Evaluation and Research, Food and Drug Administration, 10903 New Hampshire Ave., Bldg. 51, Rm. 2201, Silver Spring, MD 20993–0002, or the Office of Communication, Outreach and Development (HFM–40), Center for Biologics Evaluation and Research, Food and Drug Administration, 1401 Rockville Pike, Rockville, MD 20852–1448. Send one self-addressed adhesive label to assist that office in processing your requests.

Submit electronic comments on FDA's objective to develop prioritized therapeutic area data standards or on the roadmap to *http://www.regulations.gov.* Submit written comments to the Division of Dockets Management (HFA–305), Food and Drug Administration, 5630 Fishers Lane, Rm. 1061, Rockville, MD 20852. See the **SUPPLEMENTARY INFORMATION** section for electronic access to the roadmap.

FOR FURTHER INFORMATION CONTACT:

Ron Fitzmartin, Center for Drug Evaluation and Research, Food and Drug Administration, 10903 New Hampshire Ave., Bldg. 51, Rm. 1160, Silver Spring, MD 20993–0002, *CDERDataStandards@fda.hhs.gov;* or

Amy Malla, Center for Biologics Evaluation and Research (HFM–25), 1401 Rockville Pike, Suite 200N, Rockville, MD 20852–1448, 301–827–6085.

SUPPLEMENTARY INFORMATION:

I. Background

Traditionally, clinical study data submitted to FDA is in a format that is unique to each individual sponsor; furthermore the data quality varies. This has created inefficiencies in the review process and impeded efforts to analyze the data across applications when such analyses could be beneficial to detect trends in safety or efficacy or for other reasons. Sponsor adoption of available clinical trial data standards (CDISC/SDTM) for the submission of product applications have helped to improve the quality and standardization of submitted data. However, such a voluntary approach has proved insufficient to support both the current business requirements as well as efforts to modernize the review environment.

In 2011, the Center for Drug Evaluation and Research (CDER) identified a set of disease and therapeutic areas that could benefit from further standardization. These content area standards are primarily intended to support the efficient evaluation of medical products as noted previously in this document. Several factors were considered in the identification of these areas: (1) Areas of particular need, (2) areas with existing data standardization projects underway, and (3) areas with greater drug development pipeline activity. The initial prioritization was based on the number of active investigational new drug applications (or INDs) and input from review divisions, as well as from industry. The three tiers of priority were assembled into a roadmap and posted on the FDA Web site at *http://www.fda.gov/Drugs/DevelopmentApprovalProcess/FormsSubmissionRequirements/ElectronicSubmissions/ucm287408.htm.* The roadmap sets out a sequence of standardization efforts to achieve significant results by December 2017. CDER established a small grants program to fund projects that develop

disease and domain-specific therapeutic area data standards.

On July 9, 2012, President Obama signed into law the Food and Drug Administration Safety and Innovation Act of 2012, which includes the reauthorization of the Prescription Drug User Fee Act (PDUFA V). Under section XII of the PDUFA V performance goals, FDA agreed to create a plan for distinct therapeutic area data standards and to prioritize and develop the data standards in collaboration with CDISC and other open standards organizations. FDA is seeking public comment on the roadmap and will consider the comments as the Agency develops its proposed project plan which is due to be issued for review and comment by June 30, 2013. In addition, FDA will publish notices soliciting input on, and engagement in, standards development activities, and will periodically issue guidances specifying the completed data standards, formats, and terminologies that sponsors should use to submit data in applications.

II. Comments

Interested persons may submit either written comments regarding the roadmap, as well as recommendations on how the therapeutic area data standards development effort could be accomplished more rapidly, to the Division of Dockets Management (see **ADDRESSES**) or electronic comments to *http://www.regulations.gov.* It is only necessary to send one set of comments. Identify comments with the docket number found in brackets in the heading of this document. Received comments may be seen in the Division of Dockets Management between 9 a.m. and 4 p.m., Monday through Friday, and will be posted to the docket at *http://www.regulations.gov.*

III. Electronic Access

Persons with access to the Internet may obtain the roadmap at *http://www.fda.gov/Drugs/DevelopmentApprovalProcess/FormsSubmissionRequirements/ElectronicSubmissions/ucm287408.htm, http://www.fda.gov/BiologicsBloodVaccines/GuidanceComplianceRegulatoryInformation/default.htm,* or *http://www.regulations.gov.*

Dated: November 15, 2012.

Leslie Kux,

Assistant Commissioner for Policy.

[FR Doc. 2012–28197 Filed 11–19–12; 8:45 am]

BILLING CODE 4160–01–P

DEPARTMENT OF HEALTH AND HUMAN SERVICES

National Institutes of Health

National Institute of General Medical Sciences; Notice of Closed Meeting

Pursuant to section 10(d) of the Federal Advisory Committee Act, as amended (5 U.S.C. App.), notice is hereby given of the following meeting.

The meeting will be closed to the public in accordance with the provisions set forth in sections 552b(c)(4) and 552b(c)(6), Title 5 U.S.C., as amended. The grant applications and the discussions could disclose confidential trade secrets or commercial property such as patentable material, and personal information concerning individuals associated with the grant applications, the disclosure of which would constitute a clearly unwarranted invasion of personal privacy.

Name of Committee: National Institute of General Medical Sciences Special Emphasis Panel, Review of Minority Biomedical Research Support Behavioral Applications.

Date: November 28, 2012.

Time: 1:00 p.m. to 5:00 p.m.

Agenda: To review and evaluate grant applications.

Place: National Institutes of Health, Natcher Building, 45 Center Drive, Room 3An.18, Bethesda, MD 20892, (Telephone Conference Call).

Contact Person: Rebecca H. Johnson, Ph.D., Scientific Review Officer, Office of Scientific Review, National Institute of General Medical Sciences, National Institutes of Health, 45 Center Drive, Room 3An18C, Bethesda, MD 20892, 301–594–2771, *johnsonrh@nigms.nih.gov.*

This notice is being published less than 15 days prior to the meeting due to the timing limitations imposed by the review and funding cycle.

(Catalogue of Federal Domestic Assistance Program Nos. 93.375, Minority Biomedical Research Support; 93.821, Cell Biology and Biophysics Research; 93.859, Pharmacology, Physiology, and Biological Chemistry Research; 93.862, Genetics and Developmental Biology Research; 93.88, Minority Access to Research Careers; 93.96, Special Minority Initiatives, National Institutes of Health, HHS)

Dated: November 14, 2012.

Melanie J. Gray,

Program Analyst, Office of Federal Advisory Committee Policy.

[FR Doc. 2012–28157 Filed 11–19–12; 8:45 am]

BILLING CODE 4140–01–P

DEPARTMENT OF HEALTH AND HUMAN SERVICES

National Institutes of Health

Eunice Kennedy Shriver National Institute of Child Health & Human Development; Notice of Closed Meeting

Pursuant to section 10(d) of the Federal Advisory Committee Act, as amended (5 U.S.C. App.), notice is hereby given of the following meeting.

The meeting will be closed to the public in accordance with the provisions set forth in sections 552b(c)(4) and 552b(c)(6), Title 5 U.S.C., as amended. The grant applications and the discussions could disclose confidential trade secrets or commercial property such as patentable material, and personal information concerning individuals associated with the grant applications, the disclosure of which would constitute a clearly unwarranted invasion of personal privacy.

Name of Committee: National Institute of Child Health and Human Development Special Emphasis Panel; ''NIH Summer Research Experience Programs (R25)''.

Date: December 7, 2012.

Time: 1:30 p.m. to 3:30 p.m.

Agenda: To review and evaluate grant applications.

Place: National Institutes of Health, 6100 Executive Boulevard, Rockville, MD 20852, (Telephone Conference).

Contact Person: Anne Krey, Ph.D., Scientific Review Officer, Division of Scientific Review, Eunice Kennedy Shriver National Institute of Child Health and Human Development, NIH, 6100 Executive Blvd., Room 5B01, Bethesda, MD 20892, 301–435–6908, *ak41o@nih.gov.*

(Catalogue of Federal Domestic Assistance Program Nos. 93.864, Population Research; 93.865, Research for Mothers and Children; 93.929, Center for Medical Rehabilitation Research; 93.209, Contraception and Infertility Loan Repayment Program, National Institutes of Health, HHS)

Dated: November 13, 2012.

Michelle Trout,

Program Analyst, Office of Federal Advisory Committee Policy.

[FR Doc. 2012–28160 Filed 11–19–12; 8:45 am]

BILLING CODE 4140–01–P

DEPARTMENT OF HEALTH AND HUMAN SERVICES

National Institutes of Health

Eunice Kennedy Shriver National Institute of Child Health & Human Development; Notice of Closed Meeting

Pursuant to section 10(d) of the Federal Advisory Committee Act, as

amended (5 U.S.C. App.), notice is hereby given of the following meeting.

The meeting will be closed to the public in accordance with the provisions set forth in sections 552b(c)(4) and 552b(c)(6), Title 5 U.S.C., as amended. The contract proposals and the discussions could disclose confidential trade secrets or commercial property such as patentable material, and personal information concerning individuals associated with the contract proposals, the disclosure of which would constitute a clearly unwarranted invasion of personal privacy.

Name of Committee: National Institute of Child Health and Human Development Special Emphasis Panel; Contraceptive Clinical Trail Network: Female Sites.

Date: December 10, 2012.

Time: 8:00 a.m. to 8:00 p.m.

Agenda: To review and evaluate contract proposals.

Place: The Holiday Inn Express, 1775 Rockville Pike, Rockville, MD 20852.

Contact Person: David H. Weinberg, Ph.D., Scientific Review Officer, Division of Scientific Review, Eunice Kennedy Shriver National Institute of Child Health and Human Development, NIH, 6100 Executive Blvd., Room 5B01, Rockville, MD 20852, 301–435–6973, *David.Weinberg@nih.gov*.

(Catalogue of Federal Domestic Assistance Program Nos. 93.864, Population Research; 93.865, Research for Mothers and Children; 93.929, Center for Medical Rehabilitation Research; 93.209, Contraception and Infertility Loan Repayment Program, National Institutes of Health, HHS)

Dated: November 14, 2012.

Michelle Trout,

Program Analyst, Office of Federal Advisory Committee Policy.

[FR Doc. 2012–28162 Filed 11–19–12; 8:45 am]

BILLING CODE 4140–01–P

DEPARTMENT OF HEALTH AND HUMAN SERVICES

National Institutes of Health

National Institute of Allergy and Infectious Diseases; Notice of Closed Meetings

Pursuant to section 10(d) of the Federal Advisory Committee Act, as amended (5 U.S.C. App.), notice is hereby given of the following meetings.

The meetings will be closed to the public in accordance with the provisions set forth in sections 552b(c)(4) and 552b(c)(6), Title 5 U.S.C., as amended. The grant applications and the discussions could disclose confidential trade secrets or commercial property such as patentable material, and personal information concerning individuals associated with the grant applications, the disclosure of which would constitute a clearly unwarranted invasion of personal privacy.

Name of Committee: National Institute of Allergy and Infectious Diseases Special Emphasis Panel; Partnerships for Interventions to Treat Chronic, Persistent and Latent Infections J6.

Date: December 10, 2012.

Time: 10:00 a.m. to 4:00 p.m.

Agenda: To review and evaluate grant applications.

Place: National Institutes of Health, 6700B Rockledge Drive, Bethesda, MD 20817 (Telephone Conference Call).

Contact Person: Jane K. Battles, Ph.D., Scientific Review Officer, Scientific Review Program, Division of Extramural Activities, National Institutes of Health/NIAID, 6700B Rockledge Drive, Room 3128, Bethesda, MD 20892–7616, 301–451–2744, *battlesja@mail.nih.gov*.

Name of Committee: National Institute of Allergy and Infectious Diseases Special Emphasis Panel; Partnerships for Interventions to Treat Chronic, Persistent and Latent Infections J2.

Date: December 11, 2012.

Time: 10:00 a.m. to 4:00 p.m.

Agenda: To review and evaluate grant applications.

Place: National Institutes of Health, 6700B Rockledge Drive, Bethesda, MD 20817, (Telephone Conference Call).

Contact Person: Jane K. Battles, Ph.D., Scientific Review Officer, Scientific Review Program, Division of Extramural Activities, National Institutes of Health/NIAID, 6700B Rockledge Drive, Room 3128, Bethesda, MD 20892–7616, 301–451–2744, *battlesja@mail.nih.gov*.

Name of Committee: National Institute of Allergy and Infectious Diseases Special Emphasis Panel; Partnerships for Interventions to Treat Chronic, Persistent and Latent Infections J4.

Date: December 13, 2012.

Time: 10:00 a.m. to 4:00 p.m.

Agenda: To review and evaluate grant applications.

Place: National Institutes of Health. 6700B Rockledge Drive, Bethesda, MD 20817, (Telephone Conference Call).

Contact Person: Jane K. Battles, Ph.D., Scientific Review Officer, Scientific Review Program, Division of Extramural Activities, National Institutes of Health/NIAID, 6700B Rockledge Drive, Room 3128, Bethesda, MD 20892–7616, 301–451–2744, *battlesja@mail.nih.gov*.

(Catalogue of Federal Domestic Assistance Program Nos. 93.855, Allergy, Immunology, and Transplantation Research; 93.856, Microbiology and Infectious Diseases Research, National Institutes of Health, HHS)

Dated: November 14, 2012.

David Clary,

Program Analyst, Office of Federal Advisory Committee Policy.

[FR Doc. 2012–28164 Filed 11–19–12; 8:45 am]

BILLING CODE 4140–01–P

DEPARTMENT OF HEALTH AND HUMAN SERVICES

National Institutes of Health

National Heart, Lung, and Blood Institute; Notice of Closed Meetings

Pursuant to section 10(d) of the Federal Advisory Committee Act, as amended (5 U.S.C. App.), notice is hereby given of the following meetings.

The meetings will be closed to the public in accordance with the provisions set forth in sections 552b(c)(4) and 552b(c)(6), Title 5 U.S.C., as amended. The contract proposals and the discussions could disclose confidential trade secrets or commercial property such as patentable material, and personal information concerning individuals associated with the contract proposals, the disclosure of which would constitute a clearly unwarranted invasion of personal privacy.

Name of Committee: National Heart, Lung, and Blood Institute Special Emphasis Panel; PETAL Network Clinical Centers.

Date: December 10–11, 2012.

Time: 12:30 p.m. to 10:30 a.m.

Agenda: To review and evaluate contract proposals.

Place: Hyatt Regency Bethesda, One Bethesda Metro Center, 7400 Wisconsin Avenue, Bethesda, MD 20814.

Contact Person: William J. Johnson, Ph.D., Scientific Review Officer, Office of Scientific Review/DERA, National Heart, Lung, and Blood Institute, 6701 Rockledge Drive, Room 7178, Bethesda, MD 20892–7924, 301–435–0725, *johnsonwj@nhlbi.nih.gov*.

Name of Committee: National Heart, Lung, and Blood Institute Special Emphasis Panel; PETAL Network Clinical Coordinating Center.

Date: December 11, 2012.

Time: 11:00 a.m. to 5:00 p.m.

Agenda: To review and evaluate contract proposals.

Place: Hyatt Regency Bethesda, One Bethesda Metro Center, 7400 Wisconsin Avenue, Bethesda, MD 20814.

Contact Person: William J Johnson, Ph.D., Scientific Review Officer, Office of Scientific Review/DERA, National Heart, Lung, and Blood Institute, 6701 Rockledge Drive, Room 7178, Bethesda, MD 20892–7924, 301–435–0725, *johnsonwj@nhlbi.nih.gov*.

(Catalogue of Federal Domestic Assistance Program Nos. 93.233, National Center for Sleep Disorders Research; 93.837, Heart and Vascular Diseases Research; 93.838, Lung Diseases Research; 93.839, Blood Diseases and Resources Research, National Institutes of Health, HHS)

Dated: November 14, 2012.

Michelle Trout,

Program Analyst, Office of Federal Advisory Committee Policy.

[FR Doc. 2012–28166 Filed 11–19–12; 8:45 am]

BILLING CODE 4140–01–P

DEPARTMENT OF HEALTH AND HUMAN SERVICES

National Institutes of Health

Center for Scientific Review; Notice of Closed Meetings

Pursuant to section 10(d) of the Federal Advisory Committee Act, as amended (5 U.S.C. App.), notice is hereby given of the following meetings.

The meetings will be closed to the public in accordance with the provisions set forth in sections 552b(c)(4) and 552b(c)(6), Title 5 U.S.C., as amended. The grant applications and the discussions could disclose confidential trade secrets or commercial property such as patentable material, and personal information concerning individuals associated with the grant applications, the disclosure of which would constitute a clearly unwarranted invasion of personal privacy.

Name of Committee: Center for Scientific Review Special Emphasis Panel; Member Conflict: Neuroscience Exploratory Research Grants.

Date: December 12, 2012.

Time: 1:30 p.m. to 3:00 p.m.

Agenda: To review and evaluate grant applications.

Place: National Institutes of Health, 6701 Rockledge Drive, Bethesda, MD 20892, (Telephone Conference Call).

Contact Person: Paek-Gyu Lee, Ph.D., Scientific Review Officer, Center for Scientific Review, National Institutes of Health, 6701 Rockledge Drive, Room 4201, MSC 7812, Bethesda, MD 20892, (301) 613–2064, *leepg@csr.nih.gov.*

Name of Committee: Center for Scientific Review Special Emphasis Panel; Cartilage and Bone Biology.

Date: December 18, 2012.

Time: 1:00 p.m. to 3:00 p.m.

Agenda: To review and evaluate grant applications.

Place: National Institutes of Health, 6701 Rockledge Drive, Bethesda, MD 20892, (Telephone Conference Call).

Contact Person: Aftab A. Ansari, Ph.D., Scientific Review Officer, Center for Scientific Review, National Institutes of Health, 6701 Rockledge Drive, Room 4108, MSC 7814, Bethesda, MD 20892, 301–237–9931, *ansaria@csr.nih.gov.*

(Catalogue of Federal Domestic Assistance Program Nos. 93.306, Comparative Medicine; 93.333, Clinical Research, 93.306, 93.333, 93.337, 93.393–93.396, 93.837–93.844, 93.846–93.878, 93.892, 93.893, National Institutes of Health, HHS)

Dated: November 13, 2012.

Michelle Trout,

Program Analyst, Office of Federal Advisory Committee Policy.

[FR Doc. 2012–28168 Filed 11–19–12; 8:45 am]

BILLING CODE 4140–01–P

DEPARTMENT OF HEALTH AND HUMAN SERVICES

National Institutes of Health

Center for Scientific Review; Notice of Closed Meeting

Pursuant to section 10(d) of the Federal Advisory Committee Act, as amended (5 U.S.C. App.), notice is hereby given of the following meeting.

The meeting will be closed to the public in accordance with the provisions set forth in sections 552b(c)(4) and 552b(c)(6), Title 5 U.S.C., as amended. The grant applications and the discussions could disclose confidential trade secrets or commercial property such as patentable material, and personal information concerning individuals associated with the grant applications, the disclosure of which would constitute a clearly unwarranted invasion of personal privacy.

Name of Committee: Center for Scientific Review Special Emphasis Panel; PAR12–017: Shared Instrumentation: Confocal Microscopy #2.

Date: December 4–5, 2012.

Time: 8:00 a.m. to 8:00 p.m.

Agenda: To review and evaluate grant applications.

Place: National Institutes of Health, 6701 Rockledge Drive, Bethesda, MD 20892, (Virtual Meeting).

Contact Person: Joseph Thomas Peterson, Ph.D., Scientific Review Officer, Center for Scientific Review, National Institutes of Health, 6701 Rockledge Drive, Room 4118, MSC 7814, Bethesda, MD 20892, 301–408–9694, *petersonjt@csr.nih.gov.*

(Catalogue of Federal Domestic Assistance Program Nos. 93.306, Comparative Medicine; 93.333, Clinical Research, 93.306, 93.333, 93.337, 93.393–93.396, 93.837–93.844, 93.846–93.878, 93.892, 93.893, National Institutes of Health, HHS)

Dated: November 13, 2012.

Anna Snouffer,

Deputy Director, Office of Federal Advisory Committee Policy.

[FR Doc. 2012–28170 Filed 11–19–12; 8:45 am]

BILLING CODE 4140–01–P

DEPARTMENT OF HEALTH AND HUMAN SERVICES

National Institutes of Health

National Institute on Drug Abuse; Notice of Closed Meetings

Pursuant to section 10(d) of the Federal Advisory Committee Act, as amended (5 U.S.C. App), notice is hereby given of the following meetings.

The meetings will be closed to the public in accordance with the provisions set forth in sections 552b(c)(4) and 552b(c)(6), Title 5 U.S.C., as amended. The grant applications and the discussions could disclose confidential trade secrets or commercial property such as patentable materials, and personal information concerning individuals associated with the grant applications, the disclosure of which would constitute a clearly unwarranted invasion of personal privacy.

Name of Committee: National Institute on Drug Abuse Special Emphasis Panel CEBRA Review.

Date: November 29, 2012.

Time: 9:00 a.m. to 5:00 p.m.

Agenda: To review and evaluate grant applications.

Place: National Institutes of Health, Neuroscience Center, 6001 Executive Boulevard, Rockville, MD 20852 (Virtual Meeting).

Contact Person: Scott A. Chen, Ph.D., Scientific Review Officer, Office of Extramural Affairs, National Institute on Drug Abuse, NIH, DHHS, Room 4234, MSC 9550, 6001 Executive Blvd., Bethesda, MD 20892–9550, 301–443–9511, *chensc@mail.nih.gov.*

Name of Committee: National Institute on Drug Abuse Special Emphasis Panel CEBRA Conflict Review.

Date: November 29, 2012.

Time: 4:00 p.m. to 5:00 p.m.

Agenda: To review and evaluate grant applications.

Place: National Institutes of Health, Neuroscience Center, 6001 Executive Boulevard, Rockville, MD 20852 (Virtual Meeting).

Contact Person: Gerald L. McLaughlin, Ph.D., Scientific Review Officer, Office of Extramural Affairs, National Institute on Drug Abuse, NIH, DHHS, 6001 Executive Blvd., Room 4238, MSC 9550, Bethesda, MD 20892–9550, 301–402–6626, *gm145a@nih.gov.*

(Catalogue of Federal Domestic Assistance Program Nos.: 93.279, Drug Abuse and Addiction Research Programs, National Institutes of Health, HHS)

Dated: November 13, 2012.

Michelle Trout,

Program Analyst, Office of Federal Advisory Committee Policy.

[FR Doc. 2012–28158 Filed 11–19–12; 8:45 am]

BILLING CODE 4140–01–P

DEPARTMENT OF HEALTH AND HUMAN SERVICES

National Institutes of Health

Center for Scientific Review; Amended Notice of Meeting

Notice is hereby given of a change in the meeting of the Center for Scientific Review Special Emphasis Panel, November 8, 2012, 1:00 p.m. to November 8, 2012, 4:00 p.m., National Institutes of Health, 6701 Rockledge

Drive, Bethesda, MD 20892 which was published in the **Federal Register** on October 10, 2012, 77 FR Pg 61614–61615.

The meeting will be held on November 20, 2012 instead of November 8, 2012 at 9:30 a.m. and will end at 11:30 a.m. The meeting location remains the same. The meeting is closed to the public.

Dated: November 9, 2012.

Carolyn A. Baum,

Program Analyst, Office of Federal Advisory Committee Policy.

[FR Doc. 2012–28169 Filed 11–19–12; 8:45 am]

BILLING CODE 4140–01–P

DEPARTMENT OF HEALTH AND HUMAN SERVICES

National Institutes of Health

Center for Scientific Review; Notice of Closed Meetings

Pursuant to section 10(d) of the Federal Advisory Committee Act, as amended (5 U.S.C. App.), notice is hereby given of the following meetings.

The meetings will be closed to the public in accordance with the provisions set forth in sections 552b(c)(4) and 552b(c)(6), Title 5 U.S.C., as amended. The grant applications and the discussions could disclose confidential trade secrets or commercial property such as patentable material, and personal information concerning individuals associated with the grant applications, the disclosure of which would constitute a clearly unwarranted invasion of personal privacy.

Name of Committee: Center for Scientific Review Special Emphasis Panel; Small Business and Member Conflict: Kidney Diseases.

Date: December 11–12, 2012.

Time: 8:00 a.m. to 6:00 p.m.

Agenda: To review and evaluate grant applications.

Place: National Institutes of Health, 6701 Rockledge Drive, Bethesda, MD 20892 (Virtual Meeting).

Contact Person: Mushtaq A. Khan, DVM, Ph.D., Scientific Review Officer, Center for Scientific Review, National Institutes of Health, 6701 Rockledge Drive, Room 2176, MSC 7818, Bethesda, MD 20892, 301–435–1778, *khanm@csr.nih.gov*.

Name of Committee: Center for Scientific Review Special Emphasis Panel; Member Conflict: Children.

Date: December 11, 2012.

Time: 2:00 p.m. to 3:00 p.m.

Agenda: To review and evaluate grant applications.

Place: National Institutes of Health, 6701 Rockledge Drive, Bethesda, MD 20892 (Telephone Conference Call).

Contact Person: Serena Chu, Ph.D., Scientific Review Officer, BBBP IRG, Center for Scientific Review, National Institutes of Health, 6701 Rockledge Drive, Room 3178, MSC 7848, Bethesda, MD 20892, 301–500–5829, *sechu@csr.nih.gov*.

(Catalogue of Federal Domestic Assistance Program Nos. 93.306, Comparative Medicine; 93.333, Clinical Research, 93.306, 93.333, 93.337, 93.393–93.396, 93.837–93.844, 93.846–93.878, 93.892, 93.893, National Institutes of Health, HHS)

Dated: November 14, 2012.

David Clary,

Program Analyst, Office of Federal Advisory Committee Policy.

[FR Doc. 2012–28167 Filed 11–19–12; 8:45 am]

BILLING CODE 4140–01–P

DEPARTMENT OF HEALTH AND HUMAN SERVICES

National Institutes of Health

National Institute of Allergy and Infectious Diseases; Notice of Closed Meeting

Pursuant to section 10(d) of the Federal Advisory Committee Act, as amended (5 U.S.C. App.), notice is hereby given of the following meeting.

The meeting will be closed to the public in accordance with the provisions set forth in sections 552b(c)(4) and 552b(c)(6), Title 5 U.S.C., as amended. The contract proposals and the discussions could disclose confidential trade secrets or commercial property such as patentable material, and personal information concerning individuals associated with the contract proposals, the disclosure of which would constitute a clearly unwarranted invasion of personal privacy.

Name of Committee: National Institute of Allergy and Infectious Diseases Special Emphasis Panel; NIAID Peer Review meeting.

Date: December 19, 2012.

Time: 8:00 a.m. to 6:00 p.m.

Agenda: To review and evaluate contract proposals.

Place: Crystal City Marriott, Salon D—Potomac Ballroom, 1999 Jefferson Davis Highway, Arlington, VA 22202.

Contact Person: Michelle M. Timmerman, Ph.D., Scientific Review Officer, Scientific Review Program, DEA/NIAID/NIH/DHHS, Room 2217, 6700B Rockledge Drive, MSC–7616, Bethesda, MD 20892–7616, 301–496–2550, *timmermanm@niaid.nih.gov*.

(Catalogue of Federal Domestic Assistance Program Nos. 93.855, Allergy, Immunology, and Transplantation Research; 93.856, Microbiology and Infectious Diseases Research, National Institutes of Health, HHS)

Dated: November 13, 2012.

David Clary,

Program Analyst, Office of Federal Advisory Committee Policy.

[FR Doc. 2012–28165 Filed 11–19–12; 8:45 am]

BILLING CODE 4140–01–P

DEPARTMENT OF HEALTH AND HUMAN SERVICES

National Institutes of Health

Eunice Kennedy Shriver National Institute of Child Health and Human Development; Amended Notice of Meeting

Notice is hereby given of a change in the meeting of the Board of Scientific Counselors, NICHD, December 7, 2012, 8 a.m. to December 7, 2012, 4 p.m., National Institutes of Health, Building 31, 31 Center Drive, Room 2A48, Bethesda, MD, 20892 which was published in the **Federal Register** on October 23, 2012, 2012–26023.

The meeting is being changed from partially closed to closed, in order to allow full discussion of laboratory evaluations and other personnel-related matters.

Dated: November 13, 2012.

Michelle Trout,

Program Analyst, Office of Federal Advisory Committee Policy.

[FR Doc. 2012–28163 Filed 11–19–12; 8:45 am]

BILLING CODE 4140–01–P

DEPARTMENT OF HEALTH AND HUMAN SERVICES

National Institutes of Health

Eunice Kennedy Shriver National Institute of Child Health & Human Development; Notice of Closed Meeting

Pursuant to section 10(d) of the Federal Advisory Committee Act, as amended (5 U.S.C. App.), notice is hereby given of the following meeting.

The meeting will be closed to the public in accordance with the provisions set forth in sections 552b(c)(4) and 552b(c)(6), Title 5 U.S.C., as amended. The contract proposals and the discussions could disclose confidential trade secrets or commercial property such as patentable material, and personal information concerning individuals associated with the contract proposals, the disclosure of which would constitute a clearly unwarranted invasion of personal privacy.

Name of Committee: National Institute of Child Health and Human Development Special Emphasis Panel; Contraceptive Clinical Trail Network: Female Sites.

Date: December 7, 2012.

Time: 8:00 a.m. to 8:00 p.m.

Agenda: To review and evaluate contract proposals.

Place: The Holiday Inn Express, 1775 Rockville Pike, Rockville, MD 20852.

Contact Person: David H. Weinberg, Ph.D., Scientific Review Officer, Division of

Scientific Review, Eunice Kennedy Shriver National Institute of Child Health and Human Development, NIH, 6100 Executive Blvd., Room 5B01, Rockville, MD 20852, 301–435–6973, *David.Weinberg@nih.gov.*

(Catalogue of Federal Domestic Assistance Program Nos. 93.864, Population Research; 93.865, Research for Mothers and Children; 93.929, Center for Medical Rehabilitation Research; 93.209, Contraception and Infertility Loan Repayment Program, National Institutes of Health, HHS)

Dated: November 14, 2012.

Michelle Trout,

Program Analyst, Office of Federal Advisory Committee Policy.

[FR Doc. 2012–28161 Filed 11–19–12; 8:45 am]

BILLING CODE 4140–01–P

DEPARTMENT OF HEALTH AND HUMAN SERVICES

National Institutes of Health

Eunice Kennedy Shriver National Institute of Child Health & Human Development; Notice of Closed Meeting

Pursuant to section 10(d) of the Federal Advisory Committee Act, as amended (5 U.S.C. App.), notice is hereby given of the following meeting.

The meeting will be closed to the public in accordance with the provisions set forth in sections 552b(c)(4) and 552b(c)(6), Title 5 U.S.C., as amended. The grant applications and the discussions could disclose confidential trade secrets or commercial property such as patentable material, and personal information concerning individuals associated with the grant applications, the disclosure of which would constitute a clearly unwarranted invasion of personal privacy.

Name of Committee: National Institute of Child Health and Human Development Special Emphasis Panel; ''Biomedical/Biobehavioral Research Administration Development (BRAD) Award (G11).''

Date: November 29, 2012.

Time: 1:00 p.m. to 4:00 p.m.

Agenda: To review and evaluate grant applications.

Place: National Institutes of Health, 6100 Executive Boulevard, Rockville, MD 20852 (Telephone Conference).

Contact Person: Anne Krey, Ph.D., Scientific Review Officer, Division of Scientific Review, Eunice Kennedy Shriver National Institute of Child Health And Human Development, NIH, 6100 Executive Blvd., Room 5B01, Bethesda, MD 20892, 301–435–6908, *ak41o@nih.gov.*

This notice is being published less than 15 days prior to the meeting due to the timing limitations imposed by the review and funding cycle.

(Catalogue of Federal Domestic Assistance Program Nos. 93.864, Population Research; 93.865, Research for Mothers and Children; 93.929, Center for Medical Rehabilitation Research; 93.209, Contraception and Infertility Loan Repayment Program, National Institutes of Health, HHS)

Dated: November 13, 2012.

Michelle Trout,

Program Analyst, Office of Federal Advisory Committee Policy.

[FR Doc. 2012–28159 Filed 11–19–12; 8:45 am]

BILLING CODE 4140–01–P

DEPARTMENT OF HEALTH AND HUMAN SERVICES

Substance Abuse and Mental Health Services Administration

Current List of Laboratories and Instrumented Initial Testing Facilities Which Meet Minimum Standards To Engage in Urine Drug Testing for Federal Agencies

AGENCY: Substance Abuse and Mental Health Services Administration, HHS.

ACTION: Notice.

SUMMARY: The Department of Health and Human Services (HHS) notifies Federal agencies of the Laboratories and Instrumented Initial Testing Facilities (IITF) currently certified to meet the standards of the Mandatory Guidelines for Federal Workplace Drug Testing Programs (Mandatory Guidelines). The Mandatory Guidelines were first published in the **Federal Register** on April 11, 1988 (53 FR 11970), and subsequently revised in the **Federal Register** on June 9, 1994 (59 FR 29908); September 30, 1997 (62 FR 51118); April 13, 2004 (69 FR 19644); November 25, 2008 (73 FR 71858); December 10, 2008 (73 FR 75122); and on April 30, 2010 (75 FR 22809).

A notice listing all currently certified Laboratories and Instrumented Initial Testing Facilities (IITF) is published in the **Federal Register** during the first week of each month. If any Laboratory/IITF's certification is suspended or revoked, the Laboratory/IITF will be omitted from subsequent lists until such time as it is restored to full certification under the Mandatory Guidelines.

If any Laboratory/IITF has withdrawn from the HHS National Laboratory Certification Program (NLCP) during the past month, it will be listed at the end and will be omitted from the monthly listing thereafter.

This notice is also available on the Internet at *http://www.workplace.samhsa.gov* and *http://www.drugfreeworkplace.gov.*

FOR FURTHER INFORMATION CONTACT: Mrs. Giselle Hersh, Division of Workplace Programs, SAMHSA/CSAP, Room 2–1042, One Choke Cherry Road, Rockville, Maryland 20857; 240–276–2600 (voice), 240–276–2610 (fax).

SUPPLEMENTARY INFORMATION: The Mandatory Guidelines were initially developed in accordance with Executive Order 12564 and section 503 of Public Law 100–71. The ''Mandatory Guidelines for Federal Workplace Drug Testing Programs'', as amended in the revisions listed above, requires strict standards that Laboratories and Instrumented Initial Testing Facilities (IITF) must meet in order to conduct drug and specimen validity tests on urine specimens for Federal agencies.

To become certified, an applicant Laboratory/IITF must undergo three rounds of performance testing plus an on-site inspection. To maintain that certification, a Laboratory/IITF must participate in a quarterly performance testing program plus undergo periodic, on-site inspections.

Laboratories and Instrumented Initial Testing Facilities (IITF) in the applicant stage of certification are not to be considered as meeting the minimum requirements described in the HHS Mandatory Guidelines. A Laboratory/IITF must have its letter of certification from HHS/SAMHSA (formerly: HHS/NIDA) which attests that it has met minimum standards.

In accordance with the Mandatory Guidelines dated November 25, 2008 (73 FR 71858), the following Laboratories and Instrumented Initial Testing Facilities (IITF) meet the minimum standards to conduct drug and specimen validity tests on urine specimens:

Instrumented Initial Testing Facilities (IITF)

None.

Laboratories

ACL Laboratories, 8901 W. Lincoln Ave., West Allis, WI 53227, 414–328–7840/800–877–7016. (Formerly: Bayshore Clinical Laboratory.)

ACM Medical Laboratory, Inc., 160 Elmgrove Park, Rochester, NY 14624, 585–429–2264.

Advanced Toxicology Network, 3560 Air Center Cove, Suite 101, Memphis, TN 38118, 901–794–5770/888–290–1150.

Aegis Analytical Laboratories, 345 Hill Ave., Nashville, TN 37210, 615–255–2400. (Formerly: Aegis Sciences Corporation, Aegis Analytical Laboratories, Inc.).

Alere Toxicology Services, 1111 Newton St., Gretna, LA 70053, 504–361–8989/800–433–3823. (Formerly: Kroll Laboratory Specialists, Inc., Laboratory Specialists, Inc.)

Alere Toxicology Services, 450 Southlake Blvd., Richmond, VA 23236, 804–378–9130. (Formerly: Kroll Laboratory Specialists, Inc., Scientific Testing

Laboratories, Inc.; Kroll Scientific Testing Laboratories, Inc.)
Baptist Medical Center-Toxicology Laboratory, 11401 I–30, Little Rock, AR 72209 –7056, 501–202–2783. (Formerly: Forensic Toxicology Laboratory Baptist Medical Center.)
Clinical Reference Lab, 8433 Quivira Road, Lenexa, KS 66215–2802, 800–445–6917.
Doctors Laboratory, Inc., 2906 Julia Drive, Valdosta, GA 31602, 229–671–2281.
DrugScan, Inc., P.O. Box 2969, 1119 Mearns Road, Warminster, PA 18974, 215–674–9310.
ElSohly Laboratories, Inc., 5 Industrial Park Drive, Oxford, MS 38655, 662–236–2609.
Gamma-Dynacare Medical Laboratories*, A Division of the Gamma-Dynacare Laboratory Partnership, 245 Pall Mall Street, London, ONT, Canada N6A 1P4, 519–679–1630.
Laboratory Corporation of America Holdings, 7207 N. Gessner Road, Houston, TX 77040, 713–856–8288/800–800–2387.
Laboratory Corporation of America Holdings, 69 First Ave., Raritan, NJ 08869, 908–526–2400/800–437–4986. (Formerly: Roche Biomedical Laboratories, Inc.)
Laboratory Corporation of America Holdings, 1904 Alexander Drive, Research Triangle Park, NC 27709, 919–572–6900/800–833–3984. (Formerly: LabCorp Occupational Testing Services, Inc., CompuChem Laboratories, Inc.; CompuChem Laboratories, Inc., A Subsidiary of Roche Biomedical Laboratory; Roche CompuChem Laboratories, Inc., A Member of the Roche Group.)
Laboratory Corporation of America Holdings, 1120 Main Street, Southaven, MS 38671, 866–827–8042/800–233–6339. (Formerly: LabCorp Occupational Testing Services, Inc.; MedExpress/National Laboratory Center.)
LabOne, Inc. d/b/a Quest Diagnostics, 10101 Renner Blvd., Lenexa, KS 66219, 913–888–3927/800–873–8845. (Formerly: Quest Diagnostics Incorporated; LabOne, Inc.; Center for Laboratory Services, a Division of LabOne, Inc.)
Maxxam Analytics*, 6740 Campobello Road, Mississauga, ON, Canada L5N 2L8, 905–817–5700. (Formerly: Maxxam Analytics Inc., NOVAMANN (Ontario), Inc.)
MedTox Laboratories, Inc., 402 W. County Road D, St. Paul, MN 55112, 651–636–7466/800–832–3244.
MetroLab-Legacy Laboratory Services, 1225 NE 2nd Ave., Portland, OR 97232, 503–413–5295/800–950–5295.
Minneapolis Veterans Affairs Medical Center, Forensic Toxicology Laboratory, 1 Veterans Drive, Minneapolis, MN 55417, 612–725–2088.
National Toxicology Laboratories, Inc., 1100 California Ave., Bakersfield, CA 93304, 661–322–4250/800–350–3515.
One Source Toxicology Laboratory, Inc., 1213 Genoa-Red Bluff, Pasadena, TX 77504, 888–747–3774. (Formerly: University of Texas Medical Branch, Clinical Chemistry Division; UTMB Pathology-Toxicology Laboratory.)
Pacific Toxicology Laboratories, 9348 DeSoto Ave., Chatsworth, CA 91311, 800–328–6942. (Formerly: Centinela Hospital Airport Toxicology Laboratory.)
Pathology Associates Medical Laboratories, 110 West Cliff Dr., Spokane, WA 99204, 509–755–8991/800–541–7891 x7.
Phamatech, Inc., 10151 Barnes Canyon Road, San Diego, CA 92121, 858–643–5555.
Quest Diagnostics Incorporated, 1777 Montreal Circle, Tucker, GA 30084, 800–729–6432. (Formerly: SmithKline Beecham Clinical Laboratories; SmithKline Bio-Science Laboratories.)
Quest Diagnostics Incorporated, 400 Egypt Road, Norristown, PA 19403, 610–631–4600/877–642–2216. (Formerly: SmithKline Beecham Clinical Laboratories; SmithKline Bio-Science Laboratories.)
Quest Diagnostics Incorporated, 8401 Fallbrook Ave., West Hills, CA 91304, 818–737–6370. (Formerly: SmithKline Beecham Clinical Laboratories.)
Redwood Toxicology Laboratory, 3650 Westwind Blvd., Santa Rosa, CA 95403, 707–570–4434.
South Bend Medical Foundation, Inc., 530 N. Lafayette Blvd., South Bend, IN 46601, 574–234–4176 x1276.
Southwest Laboratories, 4625 E. Cotton Center Boulevard, Suite 177, Phoenix, AZ 85040, 602–438–8507/800–279–0027.
STERLING Reference Laboratories, 2617 East L Street, Tacoma, Washington 98421, 800–442–0438.
Toxicology & Drug Monitoring Laboratory, University of Missouri Hospital & Clinics, 301 Business Loop 70 West, Suite 208, Columbia, MO 65203, 573–882–1273.
US Army Forensic Toxicology Drug Testing Laboratory, 2490 Wilson St., Fort George G. Meade, MD 20755–5235, 301–677–7085.

*The Standards Council of Canada (SCC) voted to end its Laboratory Accreditation Program for Substance Abuse (LAPSA) effective May 12, 1998. Laboratories certified through that program were accredited to conduct forensic urine drug testing as required by U.S. Department of Transportation (DOT) regulations. As of that date, the certification of those accredited Canadian laboratories will continue under DOT authority. The responsibility for conducting quarterly performance testing plus periodic on-site inspections of those LAPSA-accredited laboratories was transferred to the U.S. HHS, with the HHS' NLCP contractor continuing to have an active role in the performance testing and laboratory inspection processes. Other Canadian laboratories wishing to be considered for the NLCP may apply directly to the NLCP contractor just as U.S. laboratories do.

Upon finding a Canadian laboratory to be qualified, HHS will recommend that DOT certify the laboratory (**Federal Register**, July 16, 1996) as meeting the minimum standards of the Mandatory Guidelines published in the **Federal Register** on April 30, 2010 (75 FR 22809). After receiving DOT certification, the laboratory will be included in the monthly list of HHS-certified laboratories and participate in the NLCP certification maintenance program.

Janine Denis Cook,

Chemist, Division of Workplace Programs, Center for Substance Abuse Prevention, SAMHSA.

[FR Doc. 2012–28177 Filed 11–19–12; 8:45 am]

BILLING CODE 4160–20–P

DEPARTMENT OF HOMELAND SECURITY

Federal Emergency Management Agency

[Internal Agency Docket No. FEMA–3349–EM; Docket ID FEMA–2011–0001]

Maryland; Emergency and Related Determinations

AGENCY: Federal Emergency Management Agency, DHS.

ACTION: Notice.

SUMMARY: This is a notice of the Presidential declaration of an emergency for the State of Maryland (FEMA–3349–EM), dated October 28, 2012, and related determinations.

DATES: *Effective Date:* October 28, 2012.

FOR FURTHER INFORMATION CONTACT: Peggy Miller, Office of Response and Recovery, Federal Emergency Management Agency, 500 C Street SW., Washington, DC 20472, (202) 646–3886.

SUPPLEMENTARY INFORMATION: Notice is hereby given that, in a letter dated October 28, 2012, the President issued an emergency declaration under the authority of the Robert T. Stafford Disaster Relief and Emergency Assistance Act, 42 U.S.C. 5121–5207 (the Stafford Act), as follows:

I have determined that the emergency conditions in the State of Maryland resulting from Hurricane Sandy beginning on October 26, 2012, and continuing, are of sufficient severity and magnitude to warrant an emergency declaration under the Robert T. Stafford Disaster Relief and Emergency Assistance Act, 42 U.S.C. 5121 *et seq.* (''the Stafford Act''). Therefore, I declare that such an emergency exists in the State of Maryland.

You are authorized to provide appropriate assistance for required emergency measures, authorized under Title V of the Stafford Act, to save lives and to protect property and public health and safety, and to lessen or avert the threat of a catastrophe in the designated areas. Specifically, you are authorized to provide assistance for emergency protective measures (Category B), limited to direct Federal assistance, under the Public Assistance program.

Consistent with the requirement that Federal assistance is supplemental, any Federal funds provided under the Stafford Act for Public Assistance will be limited to 75 percent of the total eligible costs. In order

to provide Federal assistance, you are hereby authorized to allocate from funds available for these purposes such amounts as you find necessary for Federal emergency assistance and administrative expenses.

Further, you are authorized to make changes to this declaration for the approved assistance to the extent allowable under the Stafford Act.

The Federal Emergency Management Agency (FEMA) hereby gives notice that pursuant to the authority vested in the Administrator, Department of Homeland Security, under Executive Order 12148, as amended, Michael J. Lapinski, of FEMA is appointed to act as the Federal Coordinating Officer for this declared emergency.

The following areas of the State of Maryland have been designated as adversely affected by this declared emergency:

Emergency protective measures (Category B), limited to direct federal assistance, under the Public Assistance program for all counties and the Independent City of Baltimore in the State of Maryland.

The following Catalog of Federal Domestic Assistance Numbers (CFDA) are to be used for reporting and drawing funds: 97.030, Community Disaster Loans; 97.031, Cora Brown Fund; 97.032, Crisis Counseling; 97.033, Disaster Legal Services; 97.034, Disaster Unemployment Assistance (DUA); 97.046, Fire Management Assistance Grant; 97.048, Disaster Housing Assistance to Individuals and Households In Presidentially Declared Disaster Areas; 97.049, Presidentially Declared Disaster Assistance—Disaster Housing Operations for Individuals and Households; 97.050, Presidentially Declared Disaster Assistance to Individuals and Households—Other Needs; 97.036, Disaster Grants—Public Assistance (Presidentially Declared Disasters); 97.039, Hazard Mitigation Grant.

W. Craig Fugate,

Administrator, Federal Emergency Management Agency.

[FR Doc. 2012–28119 Filed 11–19–12; 8:45 am]

BILLING CODE 9111–23–P

DEPARTMENT OF HOMELAND SECURITY

Federal Emergency Management Agency

[Internal Agency Docket No. FEMA–3352–EM; Docket ID FEMA–2011–0001]

The District of Columbia; Emergency and Related Determinations

AGENCY: Federal Emergency Management Agency, DHS.

ACTION: Notice.

SUMMARY: This is a notice of the Presidential declaration of an emergency for The District of Columbia (FEMA–3352–EM), dated October 28, 2012, and related determinations.

DATES: *Effective Date:* October 28, 2012.

FOR FURTHER INFORMATION CONTACT: Peggy Miller, Office of Response and Recovery, Federal Emergency Management Agency, 500 C Street SW., Washington, DC 20472, (202) 646–3886.

SUPPLEMENTARY INFORMATION: Notice is hereby given that, in a letter dated October 28, 2012, the President issued an emergency declaration under the authority of the Robert T. Stafford Disaster Relief and Emergency Assistance Act, 42 U.S.C. 5121–5207 (the Stafford Act), as follows:

I have determined that the emergency conditions in certain areas of the District of Columbia resulting from Hurricane Sandy beginning on October 28, 2012, and continuing, are of sufficient severity and magnitude to warrant an emergency declaration under the Robert T. Stafford Disaster Relief and Emergency Assistance Act, 42 U.S.C. 5121 *et seq.* (''the Stafford Act''). Therefore, I declare that such an emergency exists in the District of Columbia.

You are authorized to provide appropriate assistance for required emergency measures, authorized under Title V of the Stafford Act, to save lives and to protect property and public health and safety, and to lessen or avert the threat of a catastrophe in the designated areas. Specifically, you are authorized to provide assistance for emergency protective measures (Category B), limited to direct Federal assistance, under the Public Assistance program.

Consistent with the requirement that Federal assistance is supplemental, any Federal funds provided under the Stafford Act for Public Assistance will be limited to 75 percent of the total eligible costs. In order to provide Federal assistance, you are hereby authorized to allocate from funds available for these purposes such amounts as you find necessary for Federal emergency assistance and administrative expenses.

Further, you are authorized to make changes to this declaration for the approved assistance to the extent allowable under the Stafford Act.

The Federal Emergency Management Agency (FEMA) hereby gives notice that pursuant to the authority vested in the Administrator, Department of Homeland Security, under Executive Order 12148, as amended, Steven S. Ward, of FEMA is appointed to act as the Federal Coordinating Officer for this declared emergency.

The following areas of the District of Columbia have been designated as adversely affected by this declared emergency:

Emergency protective measures (Category B), limited to direct federal assistance, under the Public Assistance program for the District of Columbia.

The following Catalog of Federal Domestic Assistance Numbers (CFDA) are to be used for reporting and drawing funds: 97.030, Community Disaster Loans; 97.031, Cora Brown Fund; 97.032, Crisis Counseling; 97.033, Disaster Legal Services; 97.034, Disaster Unemployment Assistance (DUA); 97.046, Fire Management Assistance Grant; 97.048, Disaster Housing Assistance to Individuals and Households In Presidentially Declared Disaster Areas; 97.049, Presidentially Declared Disaster Assistance—Disaster Housing Operations for Individuals and Households; 97.050, Presidentially Declared Disaster Assistance to Individuals and Households—Other Needs; 97.036, Disaster Grants—Public Assistance (Presidentially Declared Disasters); 97.039, Hazard Mitigation Grant.

W. Craig Fugate,

Administrator, Federal Emergency Management Agency.

[FR Doc. 2012–28120 Filed 11–19–12; 8:45 am]

BILLING CODE 9111–23–P

DEPARTMENT OF HOMELAND SECURITY

Federal Emergency Management Agency

[Internal Agency Docket No. FEMA–3360–EM; Docket ID FEMA–2012–0002]

New Hampshire; Amendment No. 3 to Notice of an Emergency Declaration

AGENCY: Federal Emergency Management Agency, DHS.

ACTION: Notice.

SUMMARY: This notice amends the notice of an emergency declaration for State of New Hampshire (FEMA–3360–EM), dated October 30, 2012, and related determinations.

DATES: *Effective Date:* November 4, 2012.

FOR FURTHER INFORMATION CONTACT: Peggy Miller, Office of Response and Recovery, Federal Emergency Management Agency, 500 C Street SW., Washington, DC 20472, (202) 646–3886.

SUPPLEMENTARY INFORMATION: The Federal Emergency Management Agency (FEMA) hereby gives notice that pursuant to the authority vested in the Administrator, under Executive Order 12148, as amended, James N. Russo, of FEMA is appointed to act as the Federal Coordinating Officer for this emergency.

This action terminates the appointment of Kevin L. Hannes as Federal Coordinating Officer for this emergency.

The following Catalog of Federal Domestic Assistance Numbers (CFDA) are to be used for reporting and drawing funds: 97.030, Community Disaster Loans; 97.031, Cora Brown Fund; 97.032, Crisis Counseling; 97.033, Disaster Legal Services; 97.034,

Disaster Unemployment Assistance (DUA); 97.046, Fire Management Assistance Grant; 97.048, Disaster Housing Assistance to Individuals and Households In Presidentially Declared Disaster Areas; 97.049, Presidentially Declared Disaster Assistance—Disaster Housing Operations for Individuals and Households; 97.050, Presidentially Declared Disaster Assistance to Individuals and Households—Other Needs; 97.036, Disaster Grants—Public Assistance (Presidentially Declared Disasters); 97.039, Hazard Mitigation Grant.

W. Craig Fugate,

Administrator, Federal Emergency Management Agency.

[FR Doc. 2012–28117 Filed 11–19–12; 8:45 am]

BILLING CODE 9111–23–P

DEPARTMENT OF HOMELAND SECURITY

Federal Emergency Management Agency

[Internal Agency Docket No. FEMA–3360–EM; Docket ID FEMA–2012–0002]

New Hampshire; Amendment No. 2 to Notice of an Emergency Declaration

AGENCY: Federal Emergency Management Agency, DHS.

ACTION: Notice.

SUMMARY: This notice amends the notice of an emergency declaration for the State of New Hampshire (FEMA–3360–EM), dated October 30, 2012, and related determinations.

DATES: *Effective Date:* October 31, 2012.

FOR FURTHER INFORMATION CONTACT: Peggy Miller, Office of Response and Recovery, Federal Emergency Management Agency, 500 C Street SW., Washington, DC 20472, (202) 646–3886.

SUPPLEMENTARY INFORMATION: Notice is hereby given that the incident period for this emergency is closed effective October 31, 2012.

The following Catalog of Federal Domestic Assistance Numbers (CFDA) are to be used for reporting and drawing funds: 97.030, Community Disaster Loans; 97.031, Cora Brown Fund; 97.032, Crisis Counseling; 97.033, Disaster Legal Services; 97.034, Disaster Unemployment Assistance (DUA); 97.046, Fire Management Assistance Grant; 97.048, Disaster Housing Assistance to Individuals and Households In Presidentially Declared Disaster Areas; 97.049, Presidentially Declared Disaster Assistance—Disaster Housing Operations for Individuals and Households; 97.050, Presidentially Declared Disaster Assistance to Individuals and Households—Other Needs; 97.036, Disaster Grants—Public Assistance (Presidentially Declared Disasters); 97.039, Hazard Mitigation Grant.

W. Craig Fugate,

Administrator, Federal Emergency Management Agency.

[FR Doc. 2012–28122 Filed 11–19–12; 8:45 am]

BILLING CODE 9111–23–P

DEPARTMENT OF HOMELAND SECURITY

Federal Emergency Management Agency

[Internal Agency Docket No. FEMA–3358–EM; Docket ID FEMA–2012–0002]

West Virginia; Amendment No. 1 to Notice of an Emergency Declaration

AGENCY: Federal Emergency Management Agency, DHS.

ACTION: Notice.

SUMMARY: This notice amends the notice of an emergency declaration for the State of West Virginia (FEMA–3358–EM), dated October 29, 2012, and related determinations.

DATES: *Effective Date:* November 2, 2012.

FOR FURTHER INFORMATION CONTACT: Peggy Miller, Office of Response and Recovery, Federal Emergency Management Agency, 500 C Street SW., Washington, DC 20472, (202) 646–3886.

SUPPLEMENTARY INFORMATION: The notice of an emergency declaration for the State of West Virginia is hereby amended to include the following areas among those areas determined to have been adversely affected by the event declared an emergency by the President in his declaration of October 29, 2012.

The counties of Barbour, Boone, Braxton, Clay, Fayette, Grant, Greenbrier, Kanawha, Lewis, Nicholas, Pendleton, Pocahontas, Preston, Raleigh, Randolph, Summers, Taylor, Tucker, Upshur, Webster, and Wyoming for emergency protective measures (Category B), including direct federal assistance, under the Public Assistance program.

The following Catalog of Federal Domestic Assistance Numbers (CFDA) are to be used for reporting and drawing funds: 97.030, Community Disaster Loans; 97.031, Cora Brown Fund; 97.032, Crisis Counseling; 97.033, Disaster Legal Services; 97.034, Disaster Unemployment Assistance (DUA); 97.046, Fire Management Assistance Grant; 97.048, Disaster Housing Assistance to Individuals and Households In Presidentially Declared Disaster Areas; 97.049, Presidentially Declared Disaster Assistance—Disaster Housing Operations for Individuals and Households; 97.050 Presidentially Declared Disaster Assistance to Individuals and Households—Other Needs; 97.036, Disaster Grants—Public Assistance (Presidentially Declared Disasters); 97.039, Hazard Mitigation Grant.

W. Craig Fugate,

Administrator, Federal Emergency Management Agency.

[FR Doc. 2012–28118 Filed 11–19–12; 8:45 am]

BILLING CODE 9111–23–P

DEPARTMENT OF HOMELAND SECURITY

Federal Emergency Management Agency

[Internal Agency Docket No. FEMA–3360–EM; Docket ID FEMA–2012–0002]

New Hampshire; Amendment No. 1 to Notice of an Emergency Declaration

AGENCY: Federal Emergency Management Agency, DHS.

ACTION: Notice.

SUMMARY: This notice amends the notice of an emergency declaration for the State of New Hampshire (FEMA–3360–EM), dated October 30, 2012, and related determinations.

DATES: *Effective Date:* November 3, 2012.

FOR FURTHER INFORMATION CONTACT: Peggy Miller, Office of Response and Recovery, Federal Emergency Management Agency, 500 C Street SW., Washington, DC 20472, (202) 646–3886.

SUPPLEMENTARY INFORMATION: The notice of an emergency declaration for the State of New Hampshire is hereby amended to include the following areas among those areas determined to have been adversely affected by the event declared an emergency by the President in his declaration of October 30, 2012.

The counties of Belknap, Carroll, Cheshire, Coos, Grafton, Hillsborough, Merrimack, Rockingham, Stafford, and Sullivan for emergency protective measures (Category B), including direct federal assistance, under the Public Assistance program.

The following Catalog of Federal Domestic Assistance Numbers (CFDA) are to be used for reporting and drawing funds: 97.030, Community Disaster Loans; 97.031, Cora Brown Fund; 97.032, Crisis Counseling; 97.033, Disaster Legal Services; 97.034, Disaster Unemployment Assistance (DUA); 97.046, Fire Management Assistance Grant; 97.048, Disaster Housing Assistance to Individuals and Households In Presidentially Declared Disaster Areas; 97.049, Presidentially Declared Disaster Assistance—Disaster Housing Operations for Individuals and Households; 97.050 Presidentially Declared Disaster Assistance to Individuals and Households—Other Needs; 97.036, Disaster Grants—Public Assistance

(Presidentially Declared Disasters); 97.039, Hazard Mitigation Grant.

W. Craig Fugate,

Administrator, Federal Emergency Management Agency.

[FR Doc. 2012–28116 Filed 11–19–12; 8:45 am]

BILLING CODE 9111–23–P

DEPARTMENT OF HOMELAND SECURITY

Federal Emergency Management Agency

[Internal Agency Docket No. FEMA–4086–DR; Docket ID FEMA–2012–0002]

New Jersey; Amendment No. 3 to Notice of a Major Disaster Declaration

AGENCY: Federal Emergency Management Agency, DHS.

ACTION: Notice.

SUMMARY: This notice amends the notice of a major disaster declaration for the State of New Jersey (FEMA–4086–DR), dated October 30, 2012, and related determinations.

DATES: *Effective Date:* November 5, 2012.

FOR FURTHER INFORMATION CONTACT: Peggy Miller, Office of Response and Recovery, Federal Emergency Management Agency, 500 C Street SW., Washington, DC 20472, (202) 646–3886.

SUPPLEMENTARY INFORMATION: The notice of a major disaster declaration for the State of New Jersey is hereby amended to include the following areas among those areas determined to have been adversely affected by the event declared a major disaster by the President in his declaration of October 30, 2012.

Atlantic, Bergen, Cape May, Essex, Hudson, Middlesex, Monmouth, Ocean, Somerset, and Union Counties for Public Assistance [Categories C–G] (already designated for Individual Assistance and Public Assistance [Categories A and B], including direct federal assistance).

Burlington, Camden, Cumberland, Gloucester, Hunterdon, Mercer, Morris, Passaic, Salem, Sussex, and Warren Counties for Public Assistance.

The following Catalog of Federal Domestic Assistance Numbers (CFDA) are to be used for reporting and drawing funds: 97.030, Community Disaster Loans; 97.031, Cora Brown Fund; 97.032, Crisis Counseling; 97.033, Disaster Legal Services; 97.034, Disaster Unemployment Assistance (DUA); 97.046, Fire Management Assistance Grant; 97.048, Disaster Housing Assistance to Individuals and Households in Presidentially Declared Disaster Areas; 97.049, Presidentially Declared Disaster Assistance—Disaster Housing Operations for Individuals and Households; 97.050, Presidentially Declared Disaster Assistance to Individuals and Households—Other Needs; 97.036, Disaster Grants—Public Assistance (Presidentially Declared Disasters); 97.039, Hazard Mitigation Grant.

W. Craig Fugate,

Administrator, Federal Emergency Management Agency.

[FR Doc. 2012–28108 Filed 11–19–12; 8:45 am]

BILLING CODE 9111–23–P

DEPARTMENT OF HOMELAND SECURITY

Federal Emergency Management Agency

[Internal Agency Docket No. FEMA–4084–DR; Docket ID FEMA–2012–0002]

Florida; Amendment No. 1 to Notice of a Major Disaster Declaration

AGENCY: Federal Emergency Management Agency, DHS.

ACTION: Notice.

SUMMARY: This notice amends the notice of a major disaster declaration for the State of Florida (FEMA–4084–DR), dated October 18, 2012, and related determinations.

DATES: *Effective Date:* November 7, 2012.

FOR FURTHER INFORMATION CONTACT: Peggy Miller, Office of Response and Recovery, Federal Emergency Management Agency, 500 C Street SW., Washington, DC 20472, (202) 646–3886.

SUPPLEMENTARY INFORMATION: The notice of a major disaster declaration for the State of Florida is hereby amended to include the following area among those areas determined to have been adversely affected by the event declared a major disaster by the President in his declaration of October 18, 2012.

Glades County for Public Assistance.

The following Catalog of Federal Domestic Assistance Numbers (CFDA) are to be used for reporting and drawing funds: 97.030, Community Disaster Loans; 97.031, Cora Brown Fund; 97.032, Crisis Counseling; 97.033, Disaster Legal Services; 97.034, Disaster Unemployment Assistance (DUA); 97.046, Fire Management Assistance Grant; 97.048, Disaster Housing Assistance to Individuals and Households In Presidentially Declared Disaster Areas; 97.049, Presidentially Declared Disaster Assistance—Disaster Housing Operations for Individuals and Households; 97.050 Presidentially Declared Disaster Assistance to Individuals and Households—Other Needs; 97.036, Disaster Grants—Public Assistance (Presidentially Declared Disasters); 97.039, Hazard Mitigation Grant.

W. Craig Fugate,

Administrator, Federal Emergency Management Agency.

[FR Doc. 2012–28111 Filed 11–19–12; 8:45 am]

BILLING CODE 9111–23–P

DEPARTMENT OF HOMELAND SECURITY

Federal Emergency Management Agency

[Internal Agency Docket No. FEMA–4085–DR; Docket ID FEMA–2012–0002]

New York; Amendment No. 3 to Notice of a Major Disaster Declaration

AGENCY: Federal Emergency Management Agency, DHS.

ACTION: Notice.

SUMMARY: This notice amends the notice of a major disaster declaration for the State of New York (FEMA–4085–DR), dated October 30, 2012, and related determinations.

DATES: *Effective Date:* November 3, 2012.

FOR FURTHER INFORMATION CONTACT: Peggy Miller, Office of Response and Recovery, Federal Emergency Management Agency, 500 C Street SW., Washington, DC 20472, (202) 646–3886.

SUPPLEMENTARY INFORMATION: The notice of a major disaster declaration for the State of New York is hereby amended to include the following areas among those areas determined to have been adversely affected by the event declared a major disaster by the President in his declaration of October 30, 2012.

Bronx, Kings, Nassau, New York, Queens, Richmond, Rockland, Suffolk, and Westchester Counties for Public Assistance [Categories C–G] (already designated for Individual Assistance and Public Assistance [Categories A and B], including direct federal assistance).

The following Catalog of Federal Domestic Assistance Numbers (CFDA) are to be used for reporting and drawing funds: 97.030, Community Disaster Loans; 97.031, Cora Brown Fund; 97.032, Crisis Counseling; 97.033, Disaster Legal Services; 97.034, Disaster Unemployment Assistance (DUA); 97.046, Fire Management Assistance Grant; 97.048, Disaster Housing Assistance to Individuals and Households in Presidentially Declared Disaster Areas; 97.049, Presidentially Declared Disaster Assistance—Disaster Housing Operations for Individuals and Households; 97.050, Presidentially Declared Disaster Assistance to Individuals and Households—Other Needs; 97.036, Disaster Grants—Public Assistance

(Presidentially Declared Disasters); 97.039, Hazard Mitigation Grant.

W. Craig Fugate,

Administrator, Federal Emergency Management Agency.

[FR Doc. 2012–28107 Filed 11–19–12; 8:45 am]

BILLING CODE 9111–23–P

DEPARTMENT OF HOMELAND SECURITY

Federal Emergency Management Agency

[Internal Agency Docket No. FEMA–4086–DR; Docket ID FEMA–2012–0002]

New Jersey; Major Disaster and Related Determinations

AGENCY: Federal Emergency Management Agency, DHS.

ACTION: Notice.

SUMMARY: This is a notice of the Presidential declaration of a major disaster for the State of New Jersey (FEMA–4086–DR), dated October 30, 2012, and related determinations.

DATES: *Effective Date:* October 30, 2012.

FOR FURTHER INFORMATION CONTACT: Peggy Miller, Office of Response and Recovery, Federal Emergency Management Agency, 500 C Street SW., Washington, DC 20472, (202) 646–3886.

SUPPLEMENTARY INFORMATION: Notice is hereby given that, in a letter dated October 30, 2012, the President issued a major disaster declaration under the authority of the Robert T. Stafford Disaster Relief and Emergency Assistance Act, 42 U.S.C. 5121 *et seq.* (the ''Stafford Act''), as follows:

I have determined that the damage in certain areas of the State of New Jersey resulting from Hurricane Sandy beginning on October 26, 2012, and continuing, is of sufficient severity and magnitude to warrant a major disaster declaration under the Robert T. Stafford Disaster Relief and Emergency Assistance Act, 42 U.S.C. 5121 *et seq.* (the ''Stafford Act''). Therefore, I declare that such a major disaster exists in the State of New Jersey.

In order to provide Federal assistance, you are hereby authorized to allocate from funds available for these purposes such amounts as you find necessary for Federal disaster assistance and administrative expenses.

You are authorized to provide Individual Assistance and assistance for debris removal and emergency protective measures (Categories A and B), including direct Federal assistance, under the Public Assistance program in the designated areas, Hazard Mitigation throughout the State, and any other forms of assistance under the Stafford Act that you deem appropriate subject to completion of Preliminary Damage Assessments.

Consistent with the requirement that Federal assistance is supplemental, any Federal funds provided under the Stafford Act for Public Assistance, Hazard Mitigation, and Other Needs Assistance will be limited to 75 percent of the total eligible costs.

Further, you are authorized to make changes to this declaration for the approved assistance to the extent allowable under the Stafford Act.

The time period prescribed for the implementation of section 310(a), Priority to Certain Applications for Public Facility and Public Housing Assistance, 42 U.S.C. 5153, shall be for a period not to exceed six months after the date of this declaration.

The Federal Emergency Management Agency (FEMA) hereby gives notice that pursuant to the authority vested in the Administrator, under Executive Order 12148, as amended, Michael J. Hall, of FEMA is appointed to act as the Federal Coordinating Officer for this major disaster.

The following areas of the State of New Jersey have been designated as adversely affected by this major disaster:

Atlantic, Cape May, Essex, Hudson, Middlesex, Monmouth, Ocean, and Union Counties for Individual Assistance.

Atlantic, Cape May, Essex, Hudson, Middlesex, Monmouth, Ocean, and Union Counties for debris removal and emergency protective measures (Categories A and B), including direct federal assistance, under the Public Assistance program.

All counties within the State of New Jersey are eligible to apply for assistance under the Hazard Mitigation Grant Program.

The following Catalog of Federal Domestic Assistance Numbers (CFDA) are to be used for reporting and drawing funds: 97.030, Community Disaster Loans; 97.031, Cora Brown Fund; 97.032, Crisis Counseling; 97.033, Disaster Legal Services; 97.034, Disaster Unemployment Assistance (DUA); 97.046, Fire Management Assistance Grant; 97.048, Disaster Housing Assistance to Individuals and Households in Presidentially Declared Disaster Areas; 97.049, Presidentially Declared Disaster Assistance—Disaster Housing Operations for Individuals and Households; 97.050, Presidentially Declared Disaster Assistance to Individuals and Households—Other Needs; 97.036, Disaster Grants—Public Assistance (Presidentially Declared Disasters); 97.039, Hazard Mitigation Grant.

W. Craig Fugate,

Administrator, Federal Emergency Management Agency.

[FR Doc. 2012–28106 Filed 11–19–12; 8:45 am]

BILLING CODE 9111–23–P

DEPARTMENT OF HOMELAND SECURITY

Federal Emergency Management Agency

[Internal Agency Docket No. FEMA–4085–DR; Docket ID FEMA–2012–0002]

New York; Major Disaster and Related Determinations

AGENCY: Federal Emergency Management Agency, DHS.

ACTION: Notice.

SUMMARY: This is a notice of the Presidential declaration of a major disaster for the State of New York (FEMA–4085–DR), dated October 30, 2012, and related determinations.

DATES: *Effective Date:* October 30, 2012.

FOR FURTHER INFORMATION CONTACT: Peggy Miller, Office of Response and Recovery, Federal Emergency Management Agency, 500 C Street SW., Washington, DC 20472, (202) 646–3886.

SUPPLEMENTARY INFORMATION: Notice is hereby given that, in a letter dated October 30, 2012, the President issued a major disaster declaration under the authority of the Robert T. Stafford Disaster Relief and Emergency Assistance Act, 42 U.S.C. 5121 *et seq.* (the ''Stafford Act''), as follows:

I have determined that the damage in certain areas of the State of New York resulting from Hurricane Sandy beginning on October 27, 2012, and continuing, is of sufficient severity and magnitude to warrant a major disaster declaration under the Robert T. Stafford Disaster Relief and Emergency Assistance Act, 42 U.S.C. 5121 *et seq.* (the ''Stafford Act''). Therefore, I declare that such a major disaster exists in the State of New York.

In order to provide Federal assistance, you are hereby authorized to allocate from funds available for these purposes such amounts as you find necessary for Federal disaster assistance and administrative expenses.

You are authorized to provide Individual Assistance and assistance for debris removal and emergency protective measures (Categories A and B), including direct Federal assistance, under the Public Assistance program in the designated areas, Hazard Mitigation throughout the State, and any other forms of assistance under the Stafford Act that you deem appropriate subject to completion of Preliminary Damage Assessments.

Consistent with the requirement that Federal assistance is supplemental, any Federal funds provided under the Stafford Act for Public Assistance, Hazard Mitigation, and Other Needs Assistance will be limited to 75 percent of the total eligible costs.

Further, you are authorized to make changes to this declaration for the approved assistance to the extent allowable under the Stafford Act.

The time period prescribed for the implementation of section 310(a), Priority to Certain Applications for Public Facility and Public Housing Assistance, 42 U.S.C. 5153, shall be for a period not to exceed six months after the date of this declaration.

The Federal Emergency Management Agency (FEMA) hereby gives notice that pursuant to the authority vested in the Administrator, under Executive Order 12148, as amended, Michael F. Byrne, of FEMA is appointed to act as the Federal Coordinating Officer for this major disaster.

The following areas of the State of New York have been designated as adversely affected by this major disaster:

Bronx, Kings, Nassau, New York, Richmond, Suffolk, and Queens Counties for Individual Assistance.

Bronx, Kings, Nassau, New York, Richmond, Suffolk, and Queens Counties for debris removal and emergency protective measures (Categories A and B), including direct federal assistance, under the Public Assistance program.

All counties within the State of New York are eligible to apply for assistance under the Hazard Mitigation Grant Program.

The following Catalog of Federal Domestic Assistance Numbers (CFDA) are to be used for reporting and drawing funds: 97.030, Community Disaster Loans; 97.031, Cora Brown Fund; 97.032, Crisis Counseling; 97.033, Disaster Legal Services; 97.034, Disaster Unemployment Assistance (DUA); 97.046, Fire Management Assistance Grant; 97.048, Disaster Housing Assistance to Individuals and Households in Presidentially Declared Disaster Areas; 97.049, Presidentially Declared Disaster Assistance—Disaster Housing Operations for Individuals and Households; 97.050, Presidentially Declared Disaster Assistance to Individuals and Households—Other Needs; 97.036, Disaster Grants—Public Assistance (Presidentially Declared Disasters); 97.039, Hazard Mitigation Grant.

W. Craig Fugate,

Administrator, Federal Emergency Management Agency.

[FR Doc. 2012–28105 Filed 11–19–12; 8:45 am]

BILLING CODE 9111–23–P

DEPARTMENT OF HOMELAND SECURITY

Federal Emergency Management Agency

[Internal Agency Docket No. FEMA–4089–DR; Docket ID FEMA–2012–0002]

Rhode Island; Major Disaster and Related Determinations

AGENCY: Federal Emergency Management Agency, DHS.

ACTION: Notice.

SUMMARY: This is a notice of the Presidential declaration of a major disaster for the State of Rhode Island (FEMA–4089–DR), dated November 3, 2012, and related determinations.

DATES: *Effective Date:* November 3, 2012.

FOR FURTHER INFORMATION CONTACT: Peggy Miller, Office of Response and Recovery, Federal Emergency Management Agency, 500 C Street SW., Washington, DC 20472, (202) 646–3886.

SUPPLEMENTARY INFORMATION: Notice is hereby given that, in a letter dated November 3, 2012, the President issued a major disaster declaration under the authority of the Robert T. Stafford Disaster Relief and Emergency Assistance Act, 42 U.S.C. 5121 *et seq.* (the ''Stafford Act''), as follows:

I have determined that the damage in certain areas of the State of Rhode Island resulting from Hurricane Sandy during the period of October 26–31, 2012, is of sufficient severity and magnitude to warrant a major disaster declaration under the Robert T. Stafford Disaster Relief and Emergency Assistance Act, 42 U.S.C. 5121 *et seq.* (the ''Stafford Act''). Therefore, I declare that such a major disaster exists in the State of Rhode Island.

In order to provide Federal assistance, you are hereby authorized to allocate from funds available for these purposes such amounts as you find necessary for Federal disaster assistance and administrative expenses.

You are authorized to provide Public Assistance in the designated areas and Hazard Mitigation throughout the State. Direct Federal assistance is authorized. Consistent with the requirement that Federal assistance is supplemental, any Federal funds provided under the Stafford Act for Public Assistance and Hazard Mitigation will be limited to 75 percent of the total eligible costs.

Further, you are authorized to make changes to this declaration for the approved assistance to the extent allowable under the Stafford Act.

The Federal Emergency Management Agency (FEMA) hereby gives notice that pursuant to the authority vested in the Administrator, under Executive Order 12148, as amended, James N. Russo, of FEMA is appointed to act as the Federal Coordinating Officer for this major disaster.

The following areas of the State of Rhode Island have been designated as adversely affected by this major disaster:

Bristol, Newport, and Washington Counties for Public Assistance. Direct federal assistance is authorized.

All counties within the State of Rhode Island are eligible to apply for assistance under the Hazard Mitigation Grant Program.

The following Catalog of Federal Domestic Assistance Numbers (CFDA) are to be used for reporting and drawing funds: 97.030, Community Disaster Loans; 97.031, Cora Brown Fund; 97.032, Crisis Counseling; 97.033, Disaster Legal Services; 97.034, Disaster Unemployment Assistance (DUA); 97.046, Fire Management Assistance Grant; 97.048, Disaster Housing Assistance to Individuals and Households In Presidentially Declared Disaster Areas; 97.049, Presidentially Declared Disaster Assistance—Disaster Housing Operations for Individuals and Households; 97.050, Presidentially Declared Disaster Assistance to Individuals and Households—Other Needs; 97.036, Disaster Grants—Public Assistance (Presidentially Declared Disasters); 97.039, Hazard Mitigation Grant.

W. Craig Fugate,

Administrator, Federal Emergency Management Agency.

[FR Doc. 2012–28109 Filed 11–19–12; 8:45 am]

BILLING CODE 9111–23–P

DEPARTMENT OF HOMELAND SECURITY

Federal Emergency Management Agency

[Docket ID FEMA–2008–0010]

Board of Visitors for the National Fire Academy

AGENCY: Federal Emergency Management Agency, DHS.

ACTION: Committee Management; Notice of Open Teleconference Federal Advisory Committee Meeting.

SUMMARY: The Board of Visitors for the National Fire Academy (Board) will meet via teleconference on Wednesday, December 5, 2012. The meeting will be open to the public.

DATES: The meeting will take place on Wednesday, December 5, 2012, from 1:30 to 4:15 p.m. Eastern Standard Time. Please note that the meeting may close early if the Board has completed its business.

ADDRESSES: Members of the public may participate by teleconference and may contact Cindy Wivell as listed below in the **FOR FURTHER INFORMATION CONTACT** section by close of business November 30, 2012, to obtain the call-in number and access code. For information on services for individuals with disabilities or to request special assistance, contact Cindy Wivell as soon as possible.

To facilitate public participation, we are inviting public comment on the issues to be considered by the Board as listed below in the **SUPPLEMENTARY INFORMATION** section. Comments must be submitted in writing no later than November 30, 2012, and must be identified by docket ID FEMA–2008–0010 and may be submitted by *one* of the following methods:

• *Federal eRulemaking Portal: http://www.regulations.gov.* Follow the instructions for submitting comments.

• *Mail/Hand Delivery:* Cindy Wivell, 16825 South Seton Avenue, Emmitsburg, Maryland 21727.

Instructions: All submissions received must include the words ''Department of Homeland Security'' and the docket ID for this action. Comments received will be posted without alteration at *http://www.regulations.gov,* including any personal information provided.

Docket: For access to the docket to read background documents or comments received by the Board, go to *http://www.regulations.gov*.

There will be a 10-minute comment period after each agenda item. Please note that the public comment period may end for each agenda item, following the last call for comments. Contact Cindy Wivell to register as a speaker.

FOR FURTHER INFORMATION CONTACT: Cindy Wivell, 16825 South Seton Avenue, Emmitsburg, Maryland 21727, telephone (301) 447–1157, fax (301) 447–1834, and email *Cindy.Wivell@fema.dhs.gov.*

SUPPLEMENTARY INFORMATION: Notice of this meeting is given under the Federal Advisory Committee Act, 5 U.S.C. App. (Pub. L. 92–463).

Purpose of the Board

The purpose of the Board is to review annually the programs of the National Fire Academy (Academy) and advise the Administrator of the Federal Emergency Management Agency (FEMA), through the United States Fire Administrator, of the operation of the Academy and any improvements therein that the Board deems appropriate. The Board makes interim advisories to the Administrator of FEMA, through the United States Fire Administrator, whenever there is an indicated urgency to do so in fulfilling its duties. In carrying out its responsibilities, the Board examines Academy programs to determine whether these programs further the basic missions which are approved by the Administrator of FEMA, examines the physical plant of the Academy to determine the adequacy of the Academy's facilities, and examines the funding levels for Academy programs. The Board submits an annual report through the United States Fire Administrator to the Administrator of FEMA, in writing. The report provides detailed comments and recommendations regarding the operation of the Academy.

Agenda

The Board will select a Chairperson and Vice Chairperson for fiscal year (FY) 2013, and will review and approve the minutes of the July 26, 2012 meeting. The Board will discuss deferred maintenance and capital improvements on the National Emergency Training Center (NETC) campus, to include FY 2013 Budget Planning. The Board will review Academy program activities including mediated instructor-led Online Course Pilot update, new National Fire Academy (NFA) Online courses, Executive Fire Officer Program Prerequisites/Accreditation update, curriculum assessment status report and American Council on Education report, anticipated FY 2013 curriculum developments, and changes in the State training system/semi-annual course call.

The Board will review the status of the Fire and Emergency Services Higher Education (FESHE) Institutional Recognition and Certificate Program and the progress of Training Resources And Data Exchange (TRADE)/FESHE Adobe Connect electronic meetings, the future of the Degrees at a Distance Program (DDP) and how changes in the DDP Program will further the NFA goal of standardizing fire science and emergency services undergraduate degree programs. In addition, the Board will be briefed on the FESHE/Professional Development Subcommittee activities.

The public will have an opportunity to comment on these issues prior to deliberation and final action by the Board. After deliberation, the Board will recommend actions to the Superintendent of the National Fire Academy and the Administrator of FEMA.

Kirby E. Kiefer,

Deputy Superintendent, National Fire Academy, United States Fire Administration, Federal Emergency Management Agency.

[FR Doc. 2012–28221 Filed 11–19–12; 8:45 am]

BILLING CODE 9111–45–P

DEPARTMENT OF HOMELAND SECURITY

U.S. Customs and Border Protection

Agency Information Collection Activities: Application-Permit-Special License Unlading-Lading-Overtime Services

AGENCY: U.S. Customs and Border Protection (CBP), Department of Homeland Security.

ACTION: 60-Day Notice and request for comments; Extension of an existing collection of information.

SUMMARY: As part of its continuing effort to reduce paperwork and respondent burden, CBP invites the general public and other Federal agencies to comment on an information collection requirement concerning the Application-Permit-Special License Unlading-Lading-Overtime Services (CBP Form 3171). This request for comment is being made pursuant to the Paperwork Reduction Act of 1995 (Pub. L. 104–13).

DATES: Written comments should be received on or before January 22, 2013, to be assured of consideration.

ADDRESSES: Direct all written comments to U.S. Customs and Border Protection, Attn: Tracey Denning, Regulations and Rulings, Office of International Trade, 799 9th Street NW., 5th Floor, Washington, DC 20229–1177.

FOR FURTHER INFORMATION CONTACT: Requests for additional information should be directed to Tracey Denning, U.S. Customs and Border Protection, Regulations and Rulings, Office of International Trade, 799 9th Street NW., 5th Floor, Washington, DC 20229–1177, at 202–325–0265.

SUPPLEMENTARY INFORMATION: CBP invites the general public and other Federal agencies to comment on proposed and/or continuing information collections pursuant to the Paperwork Reduction Act of 1995 (Pub. L. 104–13). The comments should address: (a) Whether the collection of information is necessary for the proper performance of the functions of the agency, including whether the information shall have practical utility; (b) the accuracy of the agency's estimates of the burden of the collection of information; (c) ways to enhance the quality, utility, and clarity of the information to be collected; (d) ways to minimize the burden including the use of automated collection techniques or the use of other forms of information technology; and (e) the annual cost burden to respondents or record keepers from the collection of information (total capital/startup costs and operations and maintenance costs). The comments that are submitted will be summarized and included in the CBP request for Office of Management and Budget (OMB) approval. All comments will become a matter of public record. In this document CBP is soliciting comments concerning the following information collection:

Title: Application-Permit-Special License Unlading-Lading-Overtime Services.

OMB Number: 1651–0005.

Form Number: CBP Form 3171.

Abstract: The Application-Permit-Special License Unlading-Lading-

Overtime Services (CBP Form 3171) is used by commercial carriers and importers as a request for permission to unlade imported merchandise, baggage, or passengers. It is also used to request overtime services from CBP officers in connection with lading or unlading of merchandise, or the entry or clearance of a vessel, including the boarding of a vessel for preliminary supplies, ship's stores, sea stores, or equipment not to be reladen. CBP Form 3171 is authorized by 19 USC 1447, 1448, 1449, 1450, 1451, 1452, 1453, 1454, 1455, and 1551. It is provided for 19 CFR 4.10, 4.30, 4.37, 4.39, 4.91, 10.60, 24.16, 122.29, 122.38, 123.8, 146.32 and 146.34. This form is accessible at: *http://forms.cbp.gov/pdf/CBP_Form_3171.pdf.*

Action: CBP proposes to extend the expiration date of this information collection with no change to the estimated burden hours or to CBP Form 3171.

Type of Review: Extension (without change).

Affected Public: Businesses.

Estimated Number of Respondents: 1,500.

Estimated Number of Annual Responses per Respondent: 266.

Estimated Number of Total Annual Responses: 399,000.

Estimated Time per Response: 8 minutes.

Estimated Total Annual Burden Hours: 51,870.

Dated: November 15, 2012.

Tracey Denning,

Agency Clearance Officer, U.S. Customs and Border Protection.

[FR Doc. 2012–28212 Filed 11–19–12; 8:45 am]

BILLING CODE 9111–14–P

DEPARTMENT OF HOMELAND SECURITY

U.S. Customs and Border Protection

Agency Information Collection Activities: Holders or Containers Which Enter the United States Duty Free

AGENCY: U.S. Customs and Border Protection (CBP), Department of Homeland Security.

ACTION: 60-Day Notice and request for comments; Extension of an existing collection of information.

SUMMARY: As part of its continuing effort to reduce paperwork and respondent burden, CBP invites the general public and other Federal agencies to comment on an information collection requirement concerning the Holders or Containers which Enter the United States Duty Free. This request for comment is being made pursuant to the Paperwork Reduction Act of 1995 (Pub. L. 104–13).

DATES: Written comments should be received on or before January 22, 2013, to be assured of consideration.

ADDRESSES: Direct all written comments to U.S. Customs and Border Protection, Attn: Tracey Denning, Regulations and Rulings, Office of International Trade, 799 9th Street NW., 5th Floor, Washington, DC 20229–1177.

FOR FURTHER INFORMATION CONTACT: Requests for additional information should be directed to Tracey Denning, U.S. Customs and Border Protection, Regulations and Rulings, Office of International Trade, 799 9th Street NW., 5th Floor, Washington, DC 20229–1177, at 202–325–0265.

SUPPLEMENTARY INFORMATION: CBP invites the general public and other Federal agencies to comment on proposed and/or continuing information collections pursuant to the Paperwork Reduction Act of 1995 (Pub. L. 104–13). The comments should address: (a) Whether the collection of information is necessary for the proper performance of the functions of the agency, including whether the information shall have practical utility; (b) the accuracy of the agency's estimates of the burden of the collection of information; (c) ways to enhance the quality, utility, and clarity of the information to be collected; (d) ways to minimize the burden including the use of automated collection techniques or the use of other forms of information technology; and (e) the annual cost burden to respondents or record keepers from the collection of information (total capital/startup costs and operations and maintenance costs). The comments that are submitted will be summarized and included in the CBP request for Office of Management and Budget (OMB) approval. All comments will become a matter of public record. In this document CBP is soliciting comments concerning the following information collection:

Title: Holders or Containers which Enter the United States Duty Free.

OMB Number: 1651–0035.

Form Number: None.

Abstract: All articles that are brought into the United States are subject to duty unless they are specifically exempt under the Harmonized Tariff Schedules of the United States (HTSUS), codified as 19 U.S.C. 1202. Item 9801.00.10 (HTSUS) provides that articles that were manufactured in the U.S. and exported and returned without having been advanced in value or improved in condition by any process of manufacture may be brought back into the U.S. duty-free. In addition, Item 9803.00.50 (HTSUS) provides for the duty-free entry of substantial holders or containers of foreign manufacture if duty had been paid upon a previous importation pursuant to the provisions of 19 CFR 10.41b.

Although an article may be brought back into the United States without being subject to duty, a consumption entry must nevertheless be made along with the reason for the article not being subject to duty set forth on the entry. However, an importer who brings in merchandise packed in U.S. manufactured containers or holders or previously duty-paid containers or holders, and does so several times a year involving a great many containers or holders, may mark the container or holder with the HTSUS number in lieu of filing of entry papers each time. CBP believes such frequent filing of entry papers for these containers or holders would be overly burdensome to the importer or shipper.

19 CFR 10.41 provides that substantial holders or containers are to have prescribed markings in clear and conspicuous letters of such a size that they will be easily discernable. Section 10.41b of the CBP regulations eliminates the need for an importer to file entry documents by instead requiring the marking of the containers or holders to indicate under which item number of the HTSUS the containers or holders are entitled duty free entry.

In order to comply with 19 CFR 10.41b, the owner of the holder or container is required to place the markings on a metal tag or plate containing the following information: 9801.00.10, HTSUS; the name of the owner; and the serial number assigned by the owner. In the case of serially numbered holders or containers of foreign manufacture for which free clearance under the second provision of item 9803.00.50 HTSUS is claimed, the owner must place the following markings containing the following information: 9803.00.50 HTSUS; the port code numbers of the port of entry; the entry number; the last two digits of the fiscal year of entry covering the importation of the holders and containers on which duty was paid; the name of the owner; and the serial number assigned by the owner.

Action: CBP proposes to extend the expiration date of this information collection with no change to the burden hours or to the information collected.

Type of Review: Extension (without change).

Affected Public: Businesses.

Estimated Number of Respondents: 20.

Estimated Number of Responses per Respondent: 18.

Estimated Number of Total Annual Responses: 360.

Estimated Total Annual Burden Hours: 90.

Dated: November 14, 2012.

Tracey Denning,

Agency Clearance Officer, U.S. Customs and Border Protection.

[FR Doc. 2012–28123 Filed 11–19–12; 8:45 am]

BILLING CODE 9111–14–P

DEPARTMENT OF HOMELAND SECURITY

U.S. Customs and Border Protection

Approval of SGS North America, Inc., as a Commercial Gauger

AGENCY: U.S. Customs and Border Protection, Department of Homeland Security.

ACTION: Notice of approval of SGS North America, Inc., as a commercial gauger.

SUMMARY: Notice is hereby given that, pursuant to 19 CFR 151.13, SGS North America, Inc., 4701 East Napoleon (Hwy 90), Sulphur, LA 70663, has been approved to gauge petroleum, petroleum products, organic chemicals and vegetable oils for customs purposes, in accordance with the provisions of 19 CFR 151.13. Anyone wishing to employ this entity to conduct gauger services should request and receive written assurances from the entity that it is approved by the U.S. Customs and Border Protection to conduct the specific gauger service requested. Alternatively, inquires regarding the specific gauger service this entity is approved to perform may be directed to the U.S. Customs and Border Protection by calling (202) 344–1060. The inquiry may also be sent to *cbp.labhq@dhs.gov.* Please reference the Web site listed below for a complete listing of CBP approved gaugers and accredited laboratories.

http://www.cbp.gov/linkhandler/cgov/trade/basic_trade/labs_scientific_svcs/commercial_gaugers/gaulist.ctt/gaulist.pdf

DATES: The approval of SGS North America, Inc., as commercial gauger became effective on May 22, 2012. The next triennial inspection date will be scheduled for May 2015.

FOR FURTHER INFORMATION CONTACT: Stephen Cassata, Laboratories and Scientific Services, U.S. Customs and Border Protection, 1300 Pennsylvania Avenue NW., Suite 1500N, Washington, DC 20229, 202–344–1060.

Dated: November 14, 2012.

Ira S. Reese,

Executive Director, Laboratories and Scientific Services.

[FR Doc. 2012–28211 Filed 11–19–12; 8:45 am]

BILLING CODE 9111–14–P

DEPARTMENT OF HOUSING AND URBAN DEVELOPMENT

[Docket No. FR–5668–N–01]

Final Fair Market Rents for the Housing Choice Voucher Program for Small Area Fair Market Rent Demonstration Program Participants; Fiscal Year 2013

AGENCY: Office of the Assistant Secretary for Policy Development and Research, HUD.

ACTION: Notice of Final Fiscal Year (FY) 2013 Fair Market Rents (FMRs) for selected Public Housing Authorities (PHAs) participating in the Small Area FMR Demonstration.

SUMMARY: Section 8(c)(1) of the United States Housing Act of 1937 (USHA) requires the Secretary to publish FMRs periodically, but not less than annually, adjusted to be effective on October 1 of each year. This notice publishes the FMRs for the Housing Choice Voucher (HCV) Program for those PHAs selected to participate in the Small Area FMR Demonstration Program. Only those PHAs that have agreed to participate in the Demonstration are authorized to use these Small Area FMRs within their metropolitan operating areas.

DATES: *Effective Date:* The FMRs published in this notice are effective on October 1, 2012.

FOR FURTHER INFORMATION CONTACT: For general information regarding FMRs, please call the HUD USER information line at 800–245–2691 or access the information on the HUD USER Web site *http://www.huduser.org/portal/datasets/fmr.html.*

Questions related to use of Small Area FMRs or voucher payment standards should be directed to the respective local HUD program staff. Technical questions concerning the methodology used to develop Small Area FMRs may be addressed to Geoffrey B. Newton or Peter B. Kahn, Economic and Market Analysis Division, Office of Economic Affairs, Office of Policy Development and Research, telephone 202–708–0590. Persons with hearing or speech impairments may access this number through TTY by calling the toll-free Federal Relay Service at 800–877–8339. (Other than the HUD USER information line and TDD numbers, telephone numbers are not toll-free.)

Electronic Data Availability: This **Federal Register** notice is available electronically from the HUD User page at *http://www.huduser.org/datasets/fmr.html.* **Federal Register** notices also are available electronically from *http://www.gpoaccess.gov/fr/index.html,* the U.S. Government Printing Office Web site. Complete documentation of the methodology and data used to compute each area's final FY 2013 FMRs is available at *http://www.huduser.org/portal/datasets/fmr/fmrs/docsys.html&data=fmr13.* Final FY 2013 FMRs are available in a variety of electronic formats at *http://www.huduser.org/portal/datasets/fmr.html.*

SUPPLEMENTARY INFORMATION:

I. Background

Section 8 of the USHA (42 U.S.C. 1437f) authorizes housing assistance to aid lower-income families in renting safe and decent housing. Housing assistance payments are limited by FMRs established by HUD for different geographic areas. In the HCV program, the FMR is the basis for determining the ''payment standard amount'' used to calculate the maximum monthly subsidy for an assisted family (see 24 CFR 982.503). In general, the FMR for an area is the amount that would be needed to pay the gross rent (shelter rent plus utilities) of privately owned, decent, and safe rental housing of a modest (non-luxury) nature with suitable amenities. In addition, all rents subsidized under the HCV program must meet reasonable rent standards. Small Area FMRs (SAFMRs) are subject to all of the same rules and regulations that govern the use of all other FMRs.

II. Procedures for the Development of FMRs

Section 8(c) of the USHA requires the Secretary of HUD to publish FMRs periodically, but not less frequently than annually. Section 8(c) states, in part, as follows:

> Proposed fair market rentals for an area shall be published in the **Federal Register** with reasonable time for public comment and shall become effective upon the date of publication in final form in the **Federal Register**. Each fair market rental in effect under this subsection shall be adjusted to be effective on October 1 of each year to reflect changes, based on the most recent available data trended so the rentals will be current for the year to which they apply, of rents for existing or newly constructed rental dwelling units, as the case may be, of various sizes and types in this section.

III. Small Area Fair Market Rents

Small Area FMRs represent a fundamentally different way of operating the voucher program in metropolitan areas; therefore, HUD is testing SAFMRs through a demonstration program to better understand the programmatic impacts of changing the way voucher payment standards are set. The purpose of the demonstration program is two-fold: (1) HUD needs to evaluate the demonstration project in terms of effectiveness in meeting the primary goal of improving tenants' housing choices in areas of opportunity while also assessing the impact on tenants in areas with SAFMRs below the metropolitan-wide FMR, and (2) HUD wants to understand and evaluate the administrative and budget impacts of converting and operating the tenant-based voucher program using SAFMRs.

SAFMRs are calculated using a rent ratio determined by dividing the median gross rent across all bedrooms for the small area (a ZIP code) by the similar median gross rent for the metropolitan area covering the ZIP code. This rent ratio is multiplied by the current two-bedroom rent for the entire metropolitan area containing the small area to generate the current year two-bedroom SAFMR. In small areas where the median gross rent is not statistically reliable, HUD substitutes the median gross rent for the county containing the ZIP code in the numerator of the rent ratio calculation. The methodology used to determine the two-bedroom rent for the entire metropolitan area is identical to the methods used to calculate FY 2013 FMRs.

For FY 2013 SAFMRs, HUD has implemented two changes to the rent ratio calculation methodology. First, HUD has updated the 2005–2009 5-year ACS based ZIP code median gross rent data with 2006–2010 5-year ZIP Code Tabulation Area (ZCTA) median gross rent data. The use of the more current ACS data is consistent with the update process in the FMR methodology. However, the change from ZIP code to ZCTA was a change that the Bureau of the Census made for its aggregation process. The Census Bureau required the change to ZCTA data from ZIP code data because ZCTAs are a standard Census geography. Furthermore, The Census Bureau will not continue to support both ZIP code and ZCTA based tabulations due to concerns that ACS respondents' confidentiality could be compromised. Second, HUD expanded the criteria for determining the statistical reliability of the small area rent data in order to ensure that more SAFMRs are based on the data collected from the small area as opposed to using data from the parent county as a proxy. This change is consistent with the changes in the FMR methodology that eliminated the use of the statistical Z-test.[1]

IV. Small Area FMR Demonstration Invitation Process

HUD set out to create fair treatment and control groups of PHAs to objectively evaluate the impacts of SAFMRs. Eligible PHAs, as described below, were stratified into eight groups for local PHAs, with one additional group for state PHAs that met the criteria. HUD randomly selected which PHAs within each group would be offered the opportunity to participate and a monetary incentive to do so. No PHA was compelled to participate, and no PHA could participate unless randomly selected to receive the offer.

HUD's Office of Policy Development and Research (PD&R) compiled statistics on PHAs, and in consultation with HUD's Public and Indian Housing (PIH) Office of Housing Voucher Programs, produced a list of PHAs eligible for random selection to participate in the Small Area FMR Demonstration. The set of eligible PHAs is defined as follows: (1) Metropolitan PHAs that have at least 500 voucher tenants, (2) have at least 10 voucher tenants living in ZIP codes where the SAFMR exceeds the metropolitan FMR by more than 10 percent; (3) have at least 10 voucher tenants living in ZIP codes where the small area FMR is more than 10 percent below the metropolitan FMR; (4) have attained at least 95 percent voucher family reporting in the PIH Information Center (PIC); (5) are not ''troubled'' as determined by SEMAP; (6) have the administrative capacity as determined by PIH's Office of Field Operations; and (7) not be involved in litigation that would seriously impede their ability to administer the vouchers.

Participating PHAs (and alternates) were randomly selected from stratified sets of eligible PHAs. Selected PHAs were presented with the participation agreement, including an offer of supplemental administrative fees to cover the necessary expenses they will have to incur, and given the option to decline to participate. These fees are only to be used for administrative expenses related to the implementation of Small Area FMRs and in no way used for Housing Assistance Payments. If a PHA declined to participate, an offer was presented to the next alternate until the full slate of demonstration PHAs was established.

V. Small Area FMR Demonstration Participants

Following the process of presenting invitations to eligible PHAs, the following have agreed to participate in the Demonstration:[2]

1. The Chattanooga (TN) Housing Authority.
2. The Housing Authority of the City of Laredo (TX).
3. The Housing Authority of the City of Long Beach (CA).
4. The Housing Authority of the County of Cook (IL).
5. The Town of Mamaroneck (NY) Public Housing Agency.

The ZIP Code-level Small Area FMRs for all known and anticipated metropolitan ZIP codes for these five PHAs are included in Schedule B of this Notice. Additional SAFMRs are available at in the Small Area FMR section of *http://www.huduser.org/portal/datasets/fmr.html.*

VI. Environmental Impact

This Notice involves the establishment of Fair Market Rent schedules, which do not constitute a development decision affecting the physical condition of specific project areas or building sites. Accordingly, under 24 CFR 50.19(c)(6), this Notice is categorically excluded from environmental review under the National Environmental Policy Act of 1969 (42 U.S.C. 4321).

Accordingly, the Fair Market Rent Schedules, which will not be codified in 24 CFR part 888, are proposed to be amended as shown in the Appendix to this notice:

Dated: October 23, 2012.

Erika C. Poethig,

Acting Assistant Secretary for Policy Development and Research.

BILLING CODE 4210–67–P

[1] HUD has provided numerous detailed accounts of the calculation methodology used for Small Area Fair Market Rents. Please see our **Federal Register** notice of April 20, 2011 (76 FR 22125) for more information regarding the calculation methodology. Also, HUD's Final FY 2013 FMR documentation system available at (*http://www.huduser.org/portal/datasets/fmr/fmrs/docsys.html&data=fmr13*) contains detailed calculations for each ZIP code area in which Small Area FMR Demonstration participants operate.

[2] Additionally, all PHAs operating within the Dallas, TX HUD Metropolitan FMR Area will continue to manage their voucher programs using Small Area FMRs. These Small Area FMRs were released in a previous **Federal Register** Notice.

SCHEDULE B - FY 2013 SMALL AREA FAIR MARKET RENTS FOR DEMONSTRATION PARTICIPANTS PAGE 1

The Housing Authority of the City of Long Beach

ZIP Codes	0 BR	1 BR	2 BR	3 BR	4 BR	ZIP Codes	0 BR	1 BR	2 BR	3 BR	4 BR
90802	730	900	1170	1600	1800	90803	950	1160	1510	2070	2320
90804	810	1000	1300	1780	2000	90805	770	940	1230	1690	1890
90806	750	910	1190	1630	1830	90807	860	1060	1380	1890	2120
90808	1020	1250	1630	2230	2500	90810	750	910	1190	1630	1830
90813	690	840	1100	1510	1690	90815	1100	1350	1760	2410	2700
90822	870	1070	1390	1910	2130						

The Housing Authority of County of Cook

the ZIP Codes	0 BR	1 BR	2 BR	3 BR	4 BR	ZIP Codes	0 BR	1 BR	2 BR	3 BR	4 BR
60004	850	970	1150	1470	1710	60005	780	890	1050	1340	1560
60006	720	820	970	1240	1440	60007	750	850	1010	1290	1500
60008	820	930	1100	1400	1630	60009	720	820	970	1240	1440
60010	1050	1200	1420	1810	2110	60011	720	820	970	1240	1440
60016	740	840	1000	1270	1490	60017	720	820	970	1240	1440
60018	630	720	850	1080	1260	60019	720	820	970	1240	1440
60022	970	1100	1300	1660	1930	60025	820	930	1100	1400	1630
60026	950	1080	1280	1630	1900	60029	720	820	970	1240	1440
60038	720	820	970	1240	1440	60043	720	820	970	1240	1440
60053	840	950	1130	1440	1680	60055	720	820	970	1240	1440
60056	710	810	960	1220	1430	60062	910	1030	1220	1560	1810
60065	720	820	970	1240	1440	60067	850	960	1140	1450	1690
60068	880	1000	1190	1520	1770	60070	750	850	1010	1290	1500
60074	760	870	1030	1310	1530	60076	870	990	1170	1490	1740
60077	800	910	1080	1380	1610	60078	720	820	970	1240	1440
60082	720	820	970	1240	1440	60089	970	1100	1300	1660	1930
60090	770	880	1040	1330	1550	60091	1080	1220	1450	1850	2150
60093	1040	1180	1400	1780	2080	60094	720	820	970	1240	1440
60095	720	820	970	1240	1440	60103	910	1030	1220	1560	1810
60104	710	810	960	1220	1430	60107	1080	1220	1450	1850	2150
60120	720	820	970	1240	1440	60130	700	790	940	1200	1400
60131	610	690	820	1050	1220	60133	760	860	1020	1300	1520
60141	720	820	970	1240	1440	60153	720	820	970	1240	1440
60154	970	1100	1310	1670	1950	60155	610	690	820	1050	1220
60159	720	820	970	1240	1440	60160	640	730	860	1100	1280
60161	720	820	970	1240	1440	60162	620	710	840	1070	1250
60163	740	840	1000	1270	1490	60164	620	700	830	1060	1230
60165	680	770	910	1160	1350	60168	720	820	970	1240	1440
60169	780	890	1050	1340	1560	60171	650	730	870	1110	1290
60172	770	880	1040	1330	1550	60173	900	1020	1210	1540	1800
60176	670	760	900	1150	1340	60179	720	820	970	1240	1440
60192	1080	1220	1450	1850	2150	60193	880	1000	1190	1520	1770

SCHEDULE B - FY 2013 SMALL AREA FAIR MARKET RENTS FOR DEMONSTRATION PARTICIPANTS PAGE 2

The Housing Authority of the County of Cook continued

ZIP Codes	0 BR	1 BR	2 BR	3 BR	4 BR	ZIP Codes	0 BR	1 BR	2 BR	3 BR	4 BR
60194	900	1020	1210	1540	1800	60195	910	1040	1230	1570	1830
60196	720	820	970	1240	1440	60201	920	1050	1240	1580	1840
60202	800	910	1080	1380	1610	60203	1070	1210	1440	1840	2140
60204	720	820	970	1240	1440	60208	720	820	970	1240	1440
60209	720	820	970	1240	1440	60290	720	820	970	1240	1440
60301	880	1000	1190	1520	1770	60302	720	820	970	1240	1440
60303	720	820	970	1240	1440	60304	680	780	920	1170	1370
60305	710	810	960	1220	1430	60402	670	760	900	1150	1340
60406	620	700	830	1060	1230	60409	670	760	900	1150	1340
60411	680	780	920	1170	1370	60412	720	820	970	1240	1440
60415	660	750	890	1130	1320	60419	770	880	1040	1330	1550
60422	1080	1220	1450	1850	2150	60425	700	790	940	1200	1400
60426	730	830	980	1250	1460	60428	920	1050	1240	1580	1840
60429	910	1040	1230	1570	1830	60430	680	780	920	1170	1370
60438	670	760	900	1150	1340	60439	650	730	870	1110	1290
60443	890	1010	1200	1530	1780	60445	660	750	890	1130	1320
60452	700	790	940	1200	1400	60453	700	790	940	1200	1400
60454	720	820	970	1240	1440	60455	650	730	870	1110	1290
60456	470	530	630	800	940	60457	650	740	880	1120	1310
60458	710	800	950	1210	1410	60459	710	800	950	1210	1410
60461	720	820	970	1240	1440	60462	740	840	1000	1270	1490
60463	1080	1220	1450	1850	2150	60464	1080	1220	1450	1850	2150
60465	710	810	960	1220	1430	60466	710	800	950	1210	1410
60467	1080	1220	1450	1850	2150	60469	790	890	1060	1350	1580
60471	760	870	1030	1310	1530	60472	650	730	870	1110	1290
60473	1070	1210	1440	1840	2140	60475	620	710	840	1070	1250
60476	620	700	830	1060	1230	60477	730	830	980	1250	1460
60478	1080	1220	1450	1850	2150	60480	620	710	840	1070	1250
60482	680	770	910	1160	1350	60487	840	950	1130	1440	1680
60499	720	820	970	1240	1440	60501	670	760	900	1150	1340
60513	760	860	1020	1300	1520	60521	850	970	1150	1470	1710
60525	700	790	940	1200	1400	60526	760	870	1030	1310	1530
60527	790	900	1070	1360	1590	60534	680	780	920	1170	1370
60546	650	740	880	1120	1310	60558	720	820	970	1240	1440
60601	1080	1220	1450	1850	2150	60602	1080	1220	1450	1850	2150
60603	1080	1220	1450	1850	2150	60604	1080	1220	1450	1850	2150
60605	1080	1220	1450	1850	2150	60606	1080	1220	1450	1850	2150
60607	1000	1140	1350	1720	2010	60608	600	680	810	1030	1200
60609	620	710	840	1070	1250	60610	950	1080	1280	1630	1900
60611	1080	1220	1450	1850	2150	60612	750	850	1010	1290	1500
60613	840	950	1130	1440	1680	60614	950	1080	1280	1630	1900
60615	690	780	930	1190	1380	60616	690	780	930	1190	1380

SCHEDULE B - FY 2013 SMALL AREA FAIR MARKET RENTS FOR DEMONSTRATION PARTICIPANTS PAGE 3

The Housing Authority of the County of Cook continued

ZIP Codes	0 BR	1 BR	2 BR	3 BR	4 BR	ZIP Codes	0 BR	1 BR	2 BR	3 BR	4 BR
60617	620	710	840	1070	1250	60618	740	840	1000	1270	1490
60619	630	720	850	1080	1260	60620	660	750	890	1130	1320
60621	660	750	890	1130	1320	60622	840	950	1130	1440	1680
60623	610	690	820	1050	1220	60624	740	840	1000	1270	1490
60625	710	810	960	1220	1430	60626	650	730	870	1110	1290
60628	730	830	980	1250	1460	60629	680	770	910	1160	1350
60630	710	810	960	1220	1430	60631	760	860	1020	1300	1520
60632	630	720	850	1080	1260	60633	650	740	880	1120	1310
60634	710	800	950	1210	1410	60636	710	800	950	1210	1410
60637	690	780	930	1190	1380	60638	660	750	890	1130	1320
60639	700	790	940	1200	1400	60640	650	730	870	1110	1290
60641	670	760	900	1150	1340	60642	830	940	1120	1430	1660
60643	690	780	930	1190	1380	60644	660	750	890	1130	1320
60645	730	830	980	1250	1460	60646	700	790	940	1200	1400
60647	740	840	1000	1270	1490	60649	620	710	840	1070	1250
60651	740	840	990	1260	1470	60652	760	860	1020	1300	1520
60653	570	650	770	980	1140	60654	1080	1220	1450	1850	2150
60655	680	780	920	1170	1370	60656	760	860	1020	1300	1520
60657	880	1000	1190	1520	1770	60659	720	820	970	1240	1440
60660	640	730	860	1100	1280	60661	1070	1210	1440	1840	2140
60664	720	820	970	1240	1440	60666	720	820	970	1240	1440
60668	720	820	970	1240	1440	60669	720	820	970	1240	1440
60670	720	820	970	1240	1440	60673	720	820	970	1240	1440
60674	720	820	970	1240	1440	60675	720	820	970	1240	1440
60677	720	820	970	1240	1440	60678	720	820	970	1240	1440
60680	720	820	970	1240	1440	60681	720	820	970	1240	1440
60682	720	820	970	1240	1440	60684	720	820	970	1240	1440
60685	720	820	970	1240	1440	60686	720	820	970	1240	1440
60687	720	820	970	1240	1440	60688	720	820	970	1240	1440
60689	720	820	970	1240	1440	60690	720	820	970	1240	1440
60691	720	820	970	1240	1440	60693	720	820	970	1240	1440
60694	720	820	970	1240	1440	60695	720	820	970	1240	1440
60696	720	820	970	1240	1440	60697	720	820	970	1240	1440
60699	720	820	970	1240	1440	60701	720	820	970	1240	1440
60706	650	740	880	1120	1310	60707	680	770	910	1160	1350
60712	1080	1220	1450	1850	2150	60714	710	800	950	1210	1410
60803	630	720	850	1080	1260	60804	620	700	830	1060	1230
60805	750	850	1010	1290	1500	60827	710	810	960	1220	1430

SCHEDULE B - FY 2013 SMALL AREA FAIR MARKET RENTS FOR DEMONSTRATION PARTICIPANTS PAGE 4

Town of Mamaroneck Public Housing Agency

ZIP Codes	0 BR	1 BR	2 BR	3 BR	4 BR	ZIP Codes	0 BR	1 BR	2 BR	3 BR	4 BR
10501	1220	1270	1510	1960	2310	10502	1720	1800	2130	2770	3260
10503	1220	1270	1510	1960	2310	10504	1720	1800	2130	2770	3260
10505	1220	1270	1510	1960	2310	10506	1330	1390	1650	2150	2530
10507	1420	1480	1760	2290	2700	10510	1540	1610	1910	2480	2930
10511	1190	1240	1470	1910	2250	10514	1690	1760	2090	2720	3200
10517	1690	1760	2090	2720	3200	10518	1220	1270	1510	1960	2310
10519	1220	1270	1510	1960	2310	10520	1180	1230	1460	1900	2240
10522	1370	1430	1690	2200	2590	10523	1720	1800	2130	2770	3260
10526	1220	1270	1510	1960	2310	10527	1220	1270	1510	1960	2310
10528	1720	1800	2130	2770	3260	10530	1390	1450	1720	2240	2640
10532	1220	1270	1510	1960	2310	10533	1490	1550	1840	2390	2820
10535	1550	1620	1920	2500	2940	10536	1370	1430	1690	2200	2590
10537	940	980	1160	1510	1780	10538	1420	1480	1760	2290	2700
10540	1220	1270	1510	1960	2310	10543	1490	1550	1840	2390	2820
10546	1350	1410	1670	2170	2560	10547	1150	1200	1420	1850	2180
10548	1370	1430	1700	2210	2610	10549	1250	1310	1550	2020	2380
10550	1070	1120	1330	1730	2040	10551	1220	1270	1510	1960	2310
10552	1120	1170	1390	1810	2130	10553	1200	1260	1490	1940	2280
10560	1220	1270	1510	1960	2310	10562	1270	1320	1570	2040	2410
10566	1240	1290	1530	1990	2350	10567	1540	1610	1910	2480	2930
10570	1510	1580	1870	2430	2870	10573	1370	1430	1690	2200	2590
10576	1720	1800	2130	2770	3260	10577	1220	1270	1510	1960	2310
10578	1220	1270	1510	1960	2310	10580	1620	1700	2010	2610	3080
10583	1720	1800	2130	2770	3260	10587	1220	1270	1510	1960	2310
10588	850	890	1050	1370	1610	10589	1220	1270	1510	1960	2310
10590	1720	1800	2130	2770	3260	10591	1320	1370	1630	2120	2500
10594	1620	1700	2010	2610	3080	10595	1370	1430	1690	2200	2590
10596	960	1000	1190	1550	1820	10597	1220	1270	1510	1960	2310
10598	1330	1390	1650	2150	2530	10601	1240	1290	1530	1990	2350
10602	1220	1270	1510	1960	2310	10603	1360	1420	1680	2190	2570
10604	1410	1480	1750	2280	2680	10605	1240	1300	1540	2000	2360
10606	1420	1480	1760	2290	2700	10607	1650	1720	2040	2650	3130
10701	1070	1120	1330	1730	2040	10702	1220	1270	1510	1960	2310
10703	1110	1160	1380	1790	2120	10704	1200	1260	1490	1940	2280
10705	1060	1100	1310	1700	2010	10706	1200	1250	1480	1920	2270
10707	1400	1460	1730	2250	2650	10708	1410	1480	1750	2280	2680
10709	1390	1450	1720	2240	2640	10710	1110	1160	1380	1790	2120
10801	1190	1240	1470	1910	2250	10802	1220	1270	1510	1960	2310
10803	1260	1320	1560	2030	2390	10804	1490	1560	1850	2410	2840
10805	1250	1310	1550	2020	2380						

SCHEDULE B - FY 2013 SMALL AREA FAIR MARKET RENTS FOR DEMONSTRATION PARTICIPANTS PAGE 5

Chattanooga Housing Authority

ZIP Codes	0 BR	1 BR	2 BR	3 BR	4 BR	ZIP Codes	0 BR	1 BR	2 BR	3 BR	4 BR
37302	460	550	690	940	1060	37308	490	590	740	1010	1130
37311	490	590	740	1010	1130	37315	490	590	740	1010	1130
37336	450	540	670	910	1030	37341	650	780	970	1320	1490
37343	530	640	790	1070	1210	37350	490	590	740	1010	1130
37351	550	670	830	1130	1270	37353	480	580	720	980	1100
37363	530	640	800	1090	1230	37373	480	580	720	980	1100
37377	530	640	790	1070	1210	37379	510	620	770	1050	1180
37384	490	590	740	1010	1130	37401	490	590	740	1010	1130
37402	400	480	600	820	920	37403	400	480	600	820	920
37404	460	550	690	940	1060	37405	510	610	760	1030	1160
37406	420	510	630	860	970	37407	510	620	770	1050	1180
37408	400	480	600	820	920	37409	480	580	720	980	1100
37410	410	490	610	830	930	37411	460	550	690	940	1060
37412	490	590	730	990	1120	37414	490	590	740	1010	1130
37415	480	580	720	980	1100	37416	530	640	800	1090	1230
37419	450	540	670	910	1030	37421	530	640	800	1090	1230
37422	490	590	740	1010	1130	37424	490	590	740	1010	1130
37450	490	590	740	1010	1130						

The Housing Authority of the City of Laredo

ZIP Codes	0 BR	1 BR	2 BR	3 BR	4 BR	ZIP Codes	0 BR	1 BR	2 BR	3 BR	4 BR
78040	470	510	640	840	870	78041	580	630	790	1040	1070
78043	530	570	720	950	980	78045	690	740	930	1220	1260
78046	520	560	700	920	950						

[FR Doc. 2012–28086 Filed 11–19–12; 8:45 am]

BILLING CODE 4210–67–C

INTERNATIONAL TRADE COMMISSION

Government in the Sunshine Act Meeting Notice

[USITC SE–12–033]

AGENCY HOLDING THE MEETING: United States International Trade Commission.

TIME AND DATE: November 27, 2012 at 11:00 a.m.

PLACE: Room 101, 500 E Street SW., Washington, DC 20436, Telephone: (202) 205–2000.

STATUS: Open to the public.

MATTERS TO BE CONSIDERED:

1. Agendas for future meetings: none
2. Minutes
3. Ratification List
4. Vote in Inv. No. 731–TA–921 (Second Review) (Folding Gift Boxes from China). The Commission is currently scheduled to transmit its determination and Commissioners' opinions to the Secretary of Commerce on or before December 10, 2012.
5. Outstanding action jackets: none

In accordance with Commission policy, subject matter listed above, not disposed of at the scheduled meeting, may be carried over to the agenda of the following meeting.

Issued: November 16, 2012.

By order of the Commission.

William R. Bishop,

Supervisory Hearings and Information Officer.

[FR Doc. 2012–28267 Filed 11–16–12; 11:15 am]

BILLING CODE 7020–02–P

DEPARTMENT OF JUSTICE

[OMB Number 1105–0080]

Agency Information Collection Activities: Revision of a Currently Approved Collection: Annuity Broker Qualification Declaration Form

ACTION: 30-Day Notice of Information Collection Under Review.

The Department of Justice (DOJ), Civil Division, will be submitting the following information collection request to the Office of Management and Budget (OMB) for review and approval in accordance with the Paperwork Reduction Act of 1995. The proposed information collection is published to obtain comments from the public and affected agencies. This proposed information collection was previously published in the **Federal Register** Volume 77, Number 179, page 56860 on September 14, 2012, allowing for a 60 day comment period.

The purpose of this notice is to allow for an additional 30 days for public comment until December 20, 2012. This process is conducted in accordance with 5 CFR 1320.10.

Written comments and/or suggestions regarding the items contained in this notice, especially the estimated public burden and associated response time, should be directed to the Office of Management and Budget, Office of Information and Regulatory Affairs, Attention Department of Justice Desk Officer, Washington, DC 20503. Additionally, comments may be submitted to OMB via facsimile to (202) 395–5806. Written comments and suggestions from the public and affected agencies concerning the proposed collection of information are encouraged. Your comments should address one or more of the following four points:

—Evaluate whether the proposed collection of information is necessary for the proper performance of the functions of the agency, including whether the information will have practical utility;

—Evaluate the accuracy of the agencies estimate of the burden of the proposed collection of information, including the validity of the methodology and assumptions used;

—Enhance the quality, utility, and clarity of the information to be collected; and

—Minimize the burden of the collection of information on those who are to respond, including through the use of appropriate automated, electronic, mechanical, or other technological collection techniques or other forms of information technology, e.g., permitting electronic submission of responses.

Overview of This Information Collection

(1) *Type of Information Collection:* Revision of a currently approved collection.

(2) *Title of the Form/Collection:* Annuity Broker Qualification Declaration Form.

(3) *Agency form number, if any, and the applicable component of the Department sponsoring the collection:* Civil Division, U.S. Department of Justice.

(4) *Affected public who will be asked or required to respond, as well as a brief abstract:* Primary: Individuals. This declaration is to be submitted annually to determine whether a broker meets the qualifications to be listed as an annuity broker pursuant to Section 11015(b) of Public Law 107–273.

(5) *An estimate of the total number of respondents and the amount of time estimated for an average respondent to respond:* It is estimated that 300 respondents will complete the form annually within approximately 1 hour.

(6) *An estimate of the total public burden (in hours) associated with the collection:* The total estimated annual burden hours to complete the certification form is 300 hours.

If additional information is required contact: Jerri Murray, Department Clearance Officer, United States Department of Justice, Justice Management Division, Policy and Planning Staff, 145 N Street NE., Room 3W–1407B, Washington, DC 20530.

Dated: November 13, 2012.

Jerri Murray,

Department Clearance Officer for PRA, U.S. Department of Justice.

[FR Doc. 2012–28081 Filed 11–19–12; 8:45 am]

BILLING CODE 4410–12–P

DEPARTMENT OF JUSTICE

Office of Justice Programs

[OMB No. 1121–NEW]

Agency Information Collection Activities; Proposed Collection; Comment Request: Generic Clearance for Cognitive, Pilot and Field Studies for Bureau of Justice Statistics Data Collection Activities

ACTION: 30-day Notice.

The Department of Justice (DOJ), Office of Justice Programs, Bureau of Justice Statistics (BJS) will be submitting the following information collection request to the Office of Management and Budget (OMB) for review and approval in accordance with the Paperwork Reduction Act of 1995. The proposed information collection is published to obtain comments from the public and affected agencies. This proposed information collection was previously published in the **Federal Register** Volume 77, Number 179, page 56865 on September 14, 2012, allowing for a 60 day comment period.

The purpose of this notice is to allow for an additional 30 days for public comment until December 20, 2012. This process is conducted in accordance with 5 CFR 1320.10.

Written comments and/or suggestions regarding the items contained in this notice, especially the estimated public

burden and associated response time, should be directed to the Office of Management and Budget, Office of Information and Regulatory Affairs, Attention Department of Justice Desk Officer, Washington, DC 20503. Additionally, comments may be submitted to OMB via facsimile to (202) 395–5806. Written comments and suggestions from the public and affected agencies concerning the proposed collection of information are encouraged. Your comments should address one or more of the following four points:

—Evaluate whether the proposed collection of information is necessary for the proper performance of the functions of the agency, including whether the information will have practical utility;
—Evaluate the accuracy of the agencies estimate of the burden of the proposed collection of information, including the validity of the methodology and assumptions used;
—Enhance the quality, utility, and clarity of the information to be collected; and
—Minimize the burden of the collection of information on those who are to respond, including through the use of appropriate automated, electronic, mechanical, or other technological collection techniques or other forms of information technology, e.g., permitting electronic submission of responses.

Overview of This Information

(1) *Type of information collection:* New collection.

(2) *Title of the Form/Collection:* BJS Generic Clearance for Cognitive, Pilot, and Field Test Studies.

(3) *Agency form number, if any, and the applicable component of the department sponsoring the collection:* For numbers not available for generic clearance, Bureau of Justice Statistics, Office of Justice Programs, Department of Justice.

(4) *Affected public who will be asked or required to respond, as well as a brief abstract:* Administrators or staff of state and local agencies or programs in the relevant fields; administrators or staff of non-government agencies or programs in the relevant fields; individuals; policymakers at various levels of government.

(5) *An estimate of the total number of respondents and the amount of time estimated for an average respondent to respond/reply:* We estimate that approximately 4,350 respondents will be involved in exploratory, field test, pilot, cognitive, and focus group work conducted under this clearance over the requested 3-year clearance period. The average response time per respondent will be specific to each project covered under the clearance. Specific estimates of the number of respondents and the average response time are not known for each pilot study or development project covered under a generic clearance at this time. Project specific estimates will be submitted to OMB separately for each project conducted under this clearance. An estimate of the overall number of burden hours for activities under this generic clearance is included in item 6 below.

(6) An estimate of the total public burden (in hours) associated with the collection: The total respondent burden for identified and future projects covered under this generic clearance over the 3-year clearance period is approximately 14,100 hours.

If additional information is required contact: Jerri Murray, Department Clearance Officer, United States Department of Justice, Justice Management Division, Policy and Planning Staff, United States Department of Justice, 145 N Street NE., Washington, DC 20530.

Dated: November 13, 2012.

Jerri Murray,

Department Clearance Officer for PRA, United States Department of Justice.

[FR Doc. 2012–28082 Filed 11–19–12; 8:45 am]

BILLING CODE 4410–18–P

NATIONAL AERONAUTICS AND SPACE ADMINISTRATION

[Notice 12–101]

Notice of Information Collection

AGENCY: National Aeronautics and Space Administration (NASA).

ACTION: Notice of information collection

SUMMARY: The National Aeronautics and Space Administration, as part of its continuing effort to reduce paperwork and respondent burden, invites the general public and other Federal agencies to take this opportunity to comment on proposed and/or continuing information collections, as required by the Paperwork Reduction Act of 1995 (Pub. L. 104–13, 44 U.S.C. 3506(c)(2)(A)).

DATES: All comments should be submitted within 60 calendar days from the date of this publication.

ADDRESSES: All comments should be addressed to Ms. Frances Teel, JF000, National Aeronautics and Space Administration, Washington, DC 20546–0001.

FOR FURTHER INFORMATION CONTACT: Requests for additional information or copies of the information collection instrument(s) and instructions should be directed to Frances Teel, NASA PRA Clearance Officer, NASA Headquarters, 300 E Street SW., JF000, Washington, DC 20546, *Frances.C.Teel@nasa.gov*.

SUPPLEMENTARY INFORMATION:

I. Abstract

This collection provides a means by which NASA contractors can voluntarily and confidentially report any safety concerns or hazards pertaining to NASA programs, projects, or operations.

II. Method of Collection

The current, paper-based reporting system ensures the protection of a submitters anonymity and secure submission of the report by way of the U.S. Postal Service.

III. Data

Title: NASA Safety Reporting System.

OMB Number: 2700–0063.

Type of Review: Extension of a currently approved collection.

Affected Public: Business or other for-profit.

Number of Respondents: 75.

Responses per Respondent: 1.

Annual Responses: 75.

Hours per Request: 15 min.

Annual Burden Hours: 19.

Frequency of Report: As needed.

IV. Request for Comments

Comments are invited on: (1) Whether the proposed collection of information is necessary for the proper performance of the functions of NASA, including whether the information collected has practical utility; (2) the accuracy of NASA's estimate of the burden (including hours and cost) of the proposed collection of information; (3) ways to enhance the quality, utility, and clarity of the information to be collected; and (4) ways to minimize the burden of the collection of information on respondents, including automated collection techniques or the use of other forms of information technology.

Comments submitted in response to this notice will be summarized and included in the request for OMB approval of this information collection. They will also become a matter of public record.

Frances Teel,

NASA PRA Clearance Officer.

[FR Doc. 2012–28182 Filed 11–19–12; 8:45 am]

BILLING CODE 7510–13–P

NATIONAL SCIENCE FOUNDATION

Notice of Permit Issued Under the Antarctic Conservation Act of 1978

AGENCY: National Science Foundation.

ACTION: Notice of permit issued under the Antarctic Conservation of 1978, Public Law 95–541.

SUMMARY: The National Science Foundation (NSF) is required to publish notice of permits issued under the Antarctic Conservation Act of 1978. This is the required notice.

FOR FURTHER INFORMATION CONTACT: Nadene G. Kennedy, Permit Office, Office of Polar Programs, Rm. 755, National Science Foundation, 4201 Wilson Boulevard, Arlington, VA 22230.

SUPPLEMENTARY INFORMATION: On October 15, 2012, the National Science Foundation published a notice in the **Federal Register** of a permit application received. A Waste Management Permit was issued on November 14, 2012 to: Mike Libecki; Permit No. 2013 WM–004.

Nadene G. Kennedy,

Permit Officer.

[FR Doc. 2012–28080 Filed 11–19–12; 8:45 am]

BILLING CODE 7555–01–P

NATIONAL WOMEN'S BUSINESS COUNCIL

Data Collection Available for Public Comments and Recommendations

ACTION: Notice and request for comments.

SUMMARY: In accordance with the Paperwork Reduction Act of 1995, this notice announces the National Women's Business Council's intentions to request approval on a new information collection activity that is part of an ongoing research program.

DATES: Submit comments on or before January 1, 2013.

ADDRESSES: Send all comments regarding whether these information collections are necessary for the proper performance of the function of the agency, whether the burden estimates are accurate, and if there are ways to minimize the estimated burden and enhance the quality of the collections to Emily Bruno, Director of Research and Policy, National Women's Business Council, 409 3rd St SW., Suite 210, Washington, DC 20416.

FOR FURTHER INFORMATION CONTACT: Emily Bruno, Director of Research and Policy, National Women's Business Council, 202–205–6826 (*Emily.Bruno@nwbc.gov*) or Curtis B. Rich, Management Analyst, 202–205–7030, *Curtis.Rich@sba.gov*.

SUPPLEMENTARY INFORMATION: The National Women's Business Council (NWBC) is a non-partisan federal advisory council that serves as an independent source of advice and counsel to the President, Congress, and the Small Business Administration on economic issues of importance to women business owners. Members of the Council are prominent women business owners and leaders of women's business organizations.

One of the NWBC's priorities this year is to better understand young women entrepreneurs (ages 18–34) and how they are the same or different from young men entrepreneurs and older women entrepreneurs in their knowledge, attitudes, and behaviors. NWBC aims to understand the existing differences shown through current data as well as to explore differing expectations and growth potential through original research.

NWBC has acquired the services of a research firm to conduct quantitative data analysis of existing and available data to sketch the current state of young women entrepreneurs and identify any differences as compared to older women entrepreneurs and young men entrepreneurs. The firm would also conduct in-depth analysis of young women entrepreneurs in comparison to their counterparts through original qualitative research. The qualitative research would consist of 12 focus groups with approximately 10 individuals in each group. Questions in the focus groups will explore expectations, approaches, barriers and supports, and growth potential of young women entrepreneurs and their counterparts. The outcome of the research will be a body of evidence and set of recommendations to support the growth of businesses owned by young women entrepreneurs.

The focus groups would commence with a short questionnaire directed at a limited number of questions with defined responses. This questionnaire would be developed based on the common themes identified through previous research. The questionnaire would be given prior to the start of the focus groups and would be limited to completion within 10–15 minutes by the participants. The cover page of the questionnaire would include a limited set of demographics about the person (e.g. age, gender, entrepreneur field, year first became entrepreneur). All questionnaires will be coded with a random participant identification number, so that no names or identifiers will be included on the questionnaire. The focus groups will be no longer than 2 hours in length in total from start to finish, and no more than 10 participants will be involved in any of the focus groups. Focus groups would likely be gender- and age-specific and would be held using remote communication tools to manage time and cost.

Title: Focus Group Research: Young Women Entrepreneurs.

Description of Respondents: Young women entrepreneurs, young men entrepreneurs, and older women entrepreneurs, all representing a range of industries and sectors across the United States.

Type of respondent	Form name/activity	Number of respondents	Number of responses per respondent	Average burden per respondent (hours)	Total burden (hours)
Young Women Entrepreneurs.	Focus Group	Approximately 80	N/A	2	160
Older Women Entrepreneurs.	Focus Group	Approximately 20	N/A	2	40
Young Men Entrepreneurs.	Focus Group	Approximately 20	N/A	2	40
Totals		Approximately 120 Respondents.			Approximately 240 Hours

Dated: November 13, 2012.

Anie J. Borja,

Executive Director.

[FR Doc. 2012–28174 Filed 11–19–12; 8:45 am]

BILLING CODE 6820–AB–P

NUCLEAR REGULATORY COMMISSION

[Docket No. NRC–2012–0230]

Agency Information Collection Activities: Proposed Collection; Comment Request

AGENCY: Nuclear Regulatory Commission.

ACTION: Notice of pending NRC action to submit an information collection request to the Office of Management and Budget (OMB) and solicitation of public comment.

SUMMARY: The U.S. Nuclear Regulatory Commission (NRC) invites public comment about our intention to request the OMB's approval for renewal of an existing information collection that is summarized below. We are required to publish this notice in the **Federal Register** under the provisions of the Paperwork Reduction Act of 1995 (44 U.S.C. Chapter 35).

Information pertaining to the requirement to be submitted:

1. *The title of the information collection:* 10 CFR Part 32—''Specific Domestic Licenses to Manufacture or Transfer Certain Items Containing Byproduct Material.''

2. *Current OMB approval number:* 3150–0001.

3. *How often the collection is required:* There is a one-time submittal of information to receive a certificate of registration for a sealed source and/or device. Certificates of registration for sealed sources and/or devices can be amended at any time. In addition, licensee recordkeeping must be performed on an on-going basis, and reporting of transfer of byproduct material must be reported every calendar year, and in some cases, every calendar quarter.

4. *Who is required or asked to report:* All specific licensees who manufacture or initially transfer items containing byproduct material for sale or distribution to general licensees, or persons exempt from licensing, medical use product distributors to specific licensees, and those requesting a certificate of registration for a sealed source and/or device.

5. *The number of annual respondents:* 959 (246 NRC licensees and registration certificate holders and 713 Agreement State licensees and registration certificate holders).

6. *The number of hours needed annually to complete the requirement or request:* 164,540 (16,346 reporting hours, 148,093 recordkeeping hours, and 101 third-party disclosures hours).

7. *Abstract:* Part 32 of Title 10 of the *Code of Federal Regulations* (10 CFR), establishes requirements for specific licenses for the introduction of byproduct material into products or materials and transfer of the products or materials to general licensees, or persons exempt from licensing, medical use product distributors to specific licensees, and those requesting a certificate of registration for a sealed source and/or device. It also prescribes requirements governing holders of the specific licenses. Some of the requirements are for information which must be submitted in an application for a certificate of registration for a sealed source and/or device, records which must be kept, reports which must be submitted, and information which must be forwarded to general licensees and persons exempt from licensing. As mentioned, 10 CFR Part 32 also prescribes requirements for the issuance of certificates of registration (concerning radiation safety information about a product) to manufacturers or initial transferors of sealed sources and devices. Submission or retention of the information is mandatory for persons subject to the 10 CFR Part 32 requirements. The information is used by the NRC to make licensing and other regulatory determinations concerning the use of radioactive byproduct material in products and devices.

Submit, by January 22, 2013, comments that address the following questions:

1. Is the proposed collection of information necessary for the NRC to properly perform its functions? Does the information have practical utility?

2. Is the burden estimate accurate?

3. Is there a way to enhance the quality, utility, and clarity of the information to be collected?

4. How can the burden of the information collection be minimized, including the use of automated collection techniques or other forms of information technology?

The public may examine and have copied for a fee publicly available documents, including the draft supporting statement, at the NRC's Public Document Room, Room O–1F21, One White Flint North, 11555 Rockville Pike, Rockville, Maryland 20852. The OMB clearance requests are available at the NRC's Web site: *http://www.nrc.gov/public-involve/doc-comment/omb/*. The document will be available on the NRC's home page site for 60 days after the signature date of this notice. Comments submitted in writing or in electronic form will be made available for public inspection. Because your comments will not be edited to remove any identifying or contact information, the NRC cautions you against including any information in your submission that you do not want to be publicly disclosed.

Comments submitted should reference Docket No. NRC–2012–0230. You may submit your comments by any of the following methods: Electronic comments: Go to: *http://www.regulations.gov* and search for Docket No. NRC–2012–0230. Mail comments to the NRC Clearance Officer, Tremaine Donnell (T–5 F53), U.S. Nuclear Regulatory Commission, Washington, DC 20555–0001.

Questions about the information collection requirements may be directed to the NRC Clearance Officer, Tremaine Donnell (T–5 F53), U.S. Nuclear Regulatory Commission, Washington, DC 20555–0001, by telephone at 301–415–6258, or by email to *INFOCOLLECTS.Resource@NRC.GOV*.

Dated at Rockville, Maryland, this 14th day of November, 2012.

For the Nuclear Regulatory Commission.

Tremaine Donnell,

NRC Clearance Officer, Office of Information Services.

[FR Doc. 2012–28184 Filed 11–19–12; 8:45 am]

BILLING CODE 7590–01–P

NUCLEAR REGULATORY COMMISSION

[Docket No. NRC–2012–0150]

Agency Information Collection Activities: Submission for the Office of Management and Budget (OMB) Review; Comment Request

AGENCY: Nuclear Regulatory Commission.

ACTION: Notice of the OMB review of information collection and solicitation of public comment.

SUMMARY: The U.S. Nuclear Regulatory Commission (NRC) has recently submitted to OMB for review the following proposal for the collection of information under the provisions of the Paperwork Reduction Act of 1995 (44 U.S.C. Chapter 35). The NRC hereby informs potential respondents that an agency may not conduct or sponsor, and that a person is not required to respond to, a collection of information unless it displays a currently valid OMB control

number. The NRC published a **Federal Register** Notice with a 60-day comment period on this information collection on July 27, 2012 (77 FR 44290).

1. *Type of submission, new, revision, or extension: Extension.*

2. *The title of the information collection:* NRC Form 590, ''Application/Permit for Use of the Two White Flint North (TWFN) Auditorium.''

3. *Current OMB approval number:* 3150–0181.

4. *The form number if applicable:* NRC Form 590.

5. *How often the collection is required:* Each time public use of the auditorium is requested.

6. *Who will be required or asked to report:* Members of the public requesting use of the NRC Auditorium.

7. *An estimate of the number of annual responses:* 5.

8. *The estimated number of annual respondents:* 5.

9. *An estimate of the total number of hours needed annually to complete the requirement or request:* 1.25 hours (5 requests × 15 minutes per request).

10. *Abstract:* In accordance with the Public Buildings Act of 1959, an agreement was reached between the Maryland-National Capital Park and Planning Commission, the General Services Administration, and the NRC that the NRC auditorium will be made available for public use. Public users of the auditorium will be required to complete NRC Form 590, Application/Permit for Use of Two White Flint North Auditorium. The information is needed to allow for administrative and security review and scheduling, and to make a determination that there are no anticipated problems with the requester prior to utilization of the facility.

The public may examine and have copied for a fee publicly available documents, including the final supporting statement, at the NRC's Public Document Room, Room O–1F21, One White Flint North, 11555 Rockville Pike, Rockville, Maryland 20852. The OMB clearance requests are available at the NRC's Web site: *http://www.nrc.gov/public-involve/doc-comment/omb/.* The document will be available on the NRC's home page site for 60 days after the signature date of this notice.

Comments and questions should be directed to the OMB reviewer listed below by December 20, 2012. Comments received after this date will be considered if it is practical to do so, but assurance of consideration cannot be given to comments received after this date.

Chad Whiteman, Desk Officer, Office of Information and Regulatory Affairs (3150–0181), NEOB–10202, Office of Management and Budget, Washington, DC 20503.

Comments can also be emailed to *Chad_S_Whiteman@omb.eop.gov* or submitted by telephone at 202–395–4718.

The NRC Clearance Officer is Tremaine Donnell, 301–415–6258.

For the Nuclear Regulatory Commission.

Dated at Rockville, Maryland, this 14th day of November 2012.

Tremaine Donnell,

NRC Clearance Officer, Office of Information Services.

[FR Doc. 2012–28188 Filed 11–19–12; 8:45 am]

BILLING CODE 7590–01–P

NUCLEAR REGULATORY COMMISSION

[Docket No. NRC–2012–0172]

Agency Information Collection Activities: Submission for the Office of Management and Budget (OMB) Review; Comment Request

AGENCY: Nuclear Regulatory Commission.

ACTION: Notice of the OMB review of information collection and solicitation of public comment.

SUMMARY: The U.S. Nuclear Regulatory Commission (NRC) has recently submitted to OMB for review the following proposal for the collection of information under the provisions of the Paperwork Reduction Act of 1995 (44 U.S.C. Chapter 35). The NRC hereby informs potential respondents that an agency may not conduct or sponsor, and that a person is not required to respond to, a collection of information unless it displays a currently valid OMB control number. The NRC published a **Federal Register** Notice with a 60-day comment period on this information collection on August 14, 2012 (77 FR 48555).

1. *Type of submission, new, revision, or extension:* Extension.

2. *The title of the information collection:* NRC Form 748, ''National Source Tracking Transaction Report.''

3. *Current OMB approval number:* 3150–0202.

4. *The form number if applicable:* NRC Form 748.

5. *How often the collection is required:* On occasion (at completion of a transaction, and at inventory reconciliation).

6. *Who will be required or asked to report:* Licensees that manufacture, receive, transfer, disassemble, or dispose of nationally tracked sources.

7. *An estimate of the number of annual responses:* 13,523.

8. *The estimated number of annual respondents:* 1,400 (260 NRC Licensees + 1,140 Agreement State Licensees).

9. *An estimate of the total number of hours needed annually to complete the requirement or request:* 1,601.5 hours.

10. *Abstract:* In 2006, the NRC amended its regulations to implement a National Source Tracking System (NSTS) for certain sealed sources. The amendments require licensees to report certain transactions involving nationally tracked sources to the NSTS. These transactions include manufacture, transfer, receipt, disassembly, or disposal of the nationally tracked source. This information collection is mandatory and is used to populate the NSTS.

The public may examine and have copied for a fee, publicly available documents, including the final supporting statement, at the NRC's Public Document Room, Room O–1F21, One White Flint North, 11555 Rockville Pike, Rockville, Maryland 20852. The OMB clearance requests are available at the NRC's Web site: *http://www.nrc.gov/public-involve/doc-comment/omb/.* The document will be available on the NRC's home page site for 60 days after the signature date of this notice.

Comments and questions should be directed to the OMB reviewer listed below by December 20, 2012. Comments received after this date will be considered if it is practical to do so, but assurance of consideration cannot be given to comments received after this date.

Chad Whiteman, Desk Officer, Office of Information and Regulatory Affairs (3150–0202), NEOB–10202, Office of Management and Budget, Washington, DC 20503.

Comments can also be emailed to *Chad_S_Whiteman@omb.eop.gov,* or submitted by telephone at 202–395–4718.

The NRC Clearance Officer is Tremaine Donnell, 301–415–6258.

Dated at Rockville, Maryland, this 14th day of November, 2012.

For the Nuclear Regulatory Commission.

Tremaine Donnell,

NRC Clearance Officer, Office of Information Services.

[FR Doc. 2012–28189 Filed 11–19–12; 8:45 am]

BILLING CODE 7590–01–P

NUCLEAR REGULATORY COMMISSION

[Docket No. NRC–2012–0155]

Agency Information Collection Activities: Submission for the Office of Management and Budget (OMB) Review; Comment Request

AGENCY: Nuclear Regulatory Commission.

ACTION: Notice of the OMB review of information collection and solicitation of public comment.

SUMMARY: The U.S. Nuclear Regulatory Commission (NRC) has recently submitted to OMB for review the following proposal for the collection of information under the provisions of the Paperwork Reduction Act of 1995 (44 U.S.C. Chapter 35). The NRC hereby informs potential respondents that an agency may not conduct or sponsor, and that a person is not required to respond to, a collection of information unless it displays a currently valid OMB control number. The NRC published a **Federal Register** Notice with a 60-day comment period on this information collection on July 27, 2012 (77 FR 44290).

1. *Type of submission, new, revision, or extension:* Extension.

2. *The title of the information collection:* NRC Form 244, Registration Certificate—Use of Depleted Uranium Under General License.

3. *Current OMB approval number:* 3150–0031.

4. *The form number if applicable:* NRC Form 244.

5. *How often the collection is required:* On occasion. NRC Form 244 is submitted when depleted uranium is received or transferred under a general license. Information on NRC Form 244 is collected and evaluated on a continuing basis as events occur.

6. *Who will be required or asked to report:* Persons receiving, possessing, using, or transferring depleted uranium under the general license established in 10 CFR 40.25(a).

7. *An estimate of the number of annual responses:* 23.

8. *The estimated number of annual respondents:* 23.

9. *An estimate of the total number of hours needed annually to complete the requirement or request:* 23.

10. *Abstract:* Part 40 of Title 10 of the *Code of Federal Regulations* (10 CFR), establishes requirements for licenses for the receipt, possession, use, and transfer of radioactive source and byproduct material. The NRC Form 244 is used to report receipt and transfer of depleted uranium under general license, as required by Section 40.25. The registration certification information required by the NRC Form 244 is necessary to permit the NRC to make a determination on whether the possession, use, and transfer of depleted uranium source and byproduct material is in conformance with the Commission's regulations for protection of public health and safety.

The public may examine and have copied for a fee, publicly available documents, including the final supporting statement, at the NRC's Public Document Room, Room O–1F21, One White Flint North, 11555 Rockville Pike, Rockville, Maryland 20852. The OMB clearance requests are available at the NRC's Web site: *http://www.nrc.gov/public-involve/doc-comment/omb/.* The document will be available on the NRC's home page site for 60 days after the signature date of this notice.

Comments and questions should be directed to the OMB reviewer listed below by December 20, 2012. Comments received after this date will be considered if it is practical to do so, but assurance of consideration cannot be given to comments received after this date.

Chad Whiteman, Desk Officer, Office of Information and Regulatory Affairs (3150–0031), NEOB–10202, Office of Management and Budget, Washington, DC 20503.

Comments can also be emailed to *Chad_S_Whiteman@omb.eop.gov,* or submitted by telephone at 202–395–4718.

The NRC Clearance Officer is Tremaine Donnell, 301–415–6258.

Dated at Rockville, Maryland, this 14th day of November, 2012.

For the Nuclear Regulatory Commission.

Tremaine Donnell,

NRC Clearance Officer, Office of Information Services.

[FR Doc. 2012–28187 Filed 11–19–12; 8:45 am]

BILLING CODE 7590–01–P

NUCLEAR REGULATORY COMMISSION

[Docket No. NRC–2012–0217]

Agency Information Collection Activities: Proposed Collection; Comment Request

AGENCY: Nuclear Regulatory Commission.

ACTION: Notice of pending NRC action to submit an information collection request to the Office of Management and Budget (OMB) and solicitation of public comment.

SUMMARY: The U.S. Nuclear Regulatory Commission (NRC) invites public comment about our intention to request the OMB's approval for renewal of an existing information collection that is summarized below. We are required to publish this notice in the **Federal Register** under the provisions of the Paperwork Reduction Act of 1995 (44 U.S.C. Chapter 35).

Information pertaining to the requirement to be submitted:

1. *The title of the information collection:* 10 CFR Part 55, Operators' Licenses.

2. *Current OMB approval number:* 3150–0018.

3. *How often the collection is required:* As necessary for NRC to meet its responsibilities to determine the eligibility for applicants and operators.

4. *Who is required or asked to report:* Holders of and applicants for facility (i.e., nuclear power, non-power research and test reactor) operating licenses and individual operators; licenses.

5. *The number of annual respondents:* 101.

6. *The number of hours needed annually to complete the requirement or request:* 165,900.

7. *Abstract:* Part 55 of Title 10 of the *Code of Federal Regulations* (10 CFR), ''Operators' Licenses,'' specifies information and data to be provided by applicants and facility licensees so that the NRC may make determinations concerning the licensing and requalification of operators for nuclear reactors, as necessary to promote public health and safety. The reporting and recordkeeping requirements contained in 10 CFR Part 55 are mandatory for the facility licensees and the applicants affected.

Submit, by January 22, 2013, comments that address the following questions:

1. Is the proposed collection of information necessary for the NRC to properly perform its functions? Does the information have practical utility?

2. Is the burden estimate accurate?

3. Is there a way to enhance the quality, utility, and clarity of the information to be collected?

4. How can the burden of the information collection be minimized, including the use of automated collection techniques or other forms of information technology?

The public may examine and have copied for a fee publicly available documents, including the draft supporting statement, at the NRC's Public Document Room, Room O–1F21, One White Flint North, 11555 Rockville Pike, Rockville, Maryland 20852. The OMB clearance requests are available at

the NRC's Web site: *http://www.nrc.gov/public-involve/doc-comment/omb/.*

The document will be available on the NRC's home page site for 60 days after the signature date of this notice. Comments submitted in writing or in electronic form will be made available for public inspection. Because your comments will not be edited to remove any identifying or contact information, the NRC cautions you against including any information in your submission that you do not want to be publicly disclosed.

Comments submitted should reference Docket No. NRC–2012–0217. You may submit your comments by any of the following methods: Electronic comments: Go to *http://www.regulations.gov* and search for Docket No. NRC–2012–0217. Mail comments to the NRC Clearance Officer, Tremaine Donnell (T–5 F53), U.S. Nuclear Regulatory Commission, Washington, DC 20555–0001.

Questions about the information collection requirements may be directed to the NRC Clearance Officer, Tremaine Donnell (T–5 F53), U.S. Nuclear Regulatory Commission, Washington, DC 20555–0001, by telephone at 301–415–6258, or by email to *INFOCOLLECTS.Resource@NRC.GOV.*

Dated at Rockville, Maryland, this 14th day of November, 2012.

For the Nuclear Regulatory Commission.

Tremaine Donnell,

NRC Clearance Officer, Office of Information Services.

[FR Doc. 2012–28186 Filed 11–19–12; 8:45 am]

BILLING CODE 7590–01–P

NUCLEAR REGULATORY COMMISSION

[Docket No. NRC–2012–0245]

Agency Information Collection Activities: Proposed Collection; Comment Request

AGENCY: Nuclear Regulatory Commission.

ACTION: Notice of pending NRC action to submit an information collection request to the Office of Management and Budget (OMB) and solicitation of public comment.

SUMMARY: The U.S. Nuclear Regulatory Commission (NRC) invites public comment about our intention to request the OMB's approval for renewal of an existing information collection that is summarized below. We are required to publish this notice in the **Federal Register** under the provisions of the Paperwork Reduction Act of 1995 (44 U.S.C. Chapter 35).

Information pertaining to the requirement to be submitted:

1. *The title of the information collection:* Voluntary Reporting of Planned Topical Report Submissions.
2. *Current OMB approval number:* 3150–XXXX.
3. *How often the collection is required:* Annually.
4. *Who is required or asked to report:* Organizations planning on submitting topical reports (TRs) to NRC for review.
5. *The number of annual respondents:* 10.
6. *The number of hours needed annually to complete the requirement or request:* 1,000 hrs.
7. *Abstract:* As part of its ongoing efforts to improve the effectiveness and efficiency of the TR program, the NRC staff needs up-to-date information on TR submittals. This additional information will help the NRC staff in budget development and resource implementation. The NRC staff plans to request a list of TRs an organization plans to submit for staff review for the 3 fiscal years (FYs) following the current FY. Information to be provided for each TR includes: (1) If it will apply to existing plants, new plants, or both; (2) the estimated number of licensed facilities planning to use the approved TR; (3) any specific operating or new plant type that indicated intent to include the safety evaluation in licensing actions if the TR is approved by the staff; and (4) if a fee-exemption request will be submitted under section 170.11 of Title 10 of the *Code of Federal Regulations* (10 CFR).

Submit, by January 22, 2013, comments that address the following questions:

1. Is the proposed collection of information necessary for the NRC to properly perform its functions? Does the information have practical utility?
2. Is the burden estimate accurate?
3. Is there a way to enhance the quality, utility, and clarity of the information to be collected?
4. How can the burden of the information collection be minimized, including the use of automated collection techniques or other forms of information technology?

The public may examine and have copied for a fee publicly available documents, including the draft supporting statement, at the NRC's Public Document Room, Room O–1F21, One White Flint North, 11555 Rockville Pike, Rockville, Maryland 20852. The OMB clearance requests are available at the NRC's Web site: *http://www.nrc.gov/public-involve/doc-comment/omb/.*

The document will be available on the NRC's home page site for 60 days after the signature date of this notice. Comments submitted in writing or in electronic form will be made available for public inspection. Because your comments will not be edited to remove any identifying or contact information, the NRC cautions you against including any information in your submission that you do not want to be publicly disclosed. Comments submitted should reference Docket No. NRC–2012–0245. You may submit your comments by any of the following methods: Electronic comments: Go to *http://www.regulations.gov* and search for Docket No. NRC–2012–0245. Mail comments to the NRC Clearance Officer, Tremaine Donnell (T–5 F53), U.S. Nuclear Regulatory Commission, Washington, DC 20555–0001.

Questions about the information collection requirements may be directed to the NRC Clearance Officer, Tremaine Donnell (T–5 F53), U.S. Nuclear Regulatory Commission, Washington, DC 20555–0001, by telephone at 301–415–6258, or by email to *INFOCOLLECTS.Resource@NRC.GOV.*

Dated at Rockville, Maryland, this 14th day of November, 2012.

For the Nuclear Regulatory Commission.

Tremaine Donnell,

NRC Clearance Officer, Office of Information Services.

[FR Doc. 2012–28185 Filed 11–19–12; 8:45 am]

BILLING CODE 7590–01–P

NUCLEAR REGULATORY COMMISSION

Sunshine Federal Register Notice

AGENCY HOLDING THE MEETINGS: Nuclear Regulatory Commission, [NRC–2012–0002].

DATE: Weeks of November 19, 26, December 3, 10, 17, 24, 2012.

PLACE: Commissioners' Conference Room, 11555 Rockville Pike, Rockville, Maryland.

STATUS: Public and Closed.

Week of November 19, 2012

There are no meetings scheduled for the week of November 19, 2012.

Week of November 26, 2012—Tentative

Tuesday, November 27, 2012

9:00 a.m. Briefing on Operator Licensing Program (Public Meeting) (Contact: Jack McHale, 301–415–3254)

This meeting will be webcast live at the Web address—*www.nrc.gov*

Wednesday, November 28, 2012

9:00 a.m. Discussion of Management and Personnel Issues

(Closed—Ex. 2 & 6)
2:00 p.m. Discussion of Management and Personnel Issues (Closed—Ex. 1, 2 & 6)

Thursday, November 29, 2012

2:30 p.m. Briefing on Security issues (Closed—Ex. 1)

Week of December 3, 2012—Tentative

Thursday, December 6, 2012

9:30 a.m. Meeting with the Advisory Committee on Reactor Safeguards (ACRS) (Public Meeting) (Contact: Ed Hackett, 301–415–7360)

This meeting will be webcast live at the Web address—*www.nrc.gov*

Week of December 10, 2012—Tentative

There are no meetings scheduled for the week of December 10, 2012.

Week of December 17, 2012—Tentative

There are no meetings scheduled for the week of December 17, 2012.

Week of December 24, 2012—Tentative

There are no meetings scheduled for the week of December 24, 2012.

* * * * *

* The schedule for Commission meetings is subject to change on short notice. To verify the status of meetings, call (recording)—301–415–1292. Contact person for more information: Rochelle Bavol, 301–415–1651.

* * * * *

The NRC Commission Meeting Schedule can be found on the Internet at: *http://www.nrc.gov/public-involve/public-meetings/schedule.html.*

* * * * *

The NRC provides reasonable accommodation to individuals with disabilities where appropriate. If you need a reasonable accommodation to participate in these public meetings, or need this meeting notice or the transcript or other information from the public meetings in another format (e.g. braille, large print), please notify Bill Dosch, Chief, Work Life and Benefits Branch, at 301–415–6200, TDD: 301–415–2100, or by email at *william.dosch@nrc.gov.* Determinations on requests for reasonable accommodation will be made on a case-by-case basis.

* * * * *

This notice is distributed electronically to subscribers. If you no longer wish to receive it, or would like to be added to the distribution, please contact the Office of the Secretary, Washington, DC 20555 (301–415–1969), or send an email to *darlene.wright@nrc.gov.*

Dated: November 15, 2012.

Rochelle C. Bavol,

Policy Coordinator, Office of the Secretary.

[FR Doc. 2012–28312 Filed 11–16–12; 4:15 pm]

BILLING CODE 7590–01–P

RAILROAD RETIREMENT BOARD

Agency Forms Submitted for OMB Review, Request for Comments

Summary: In accordance with the Paperwork Reduction Act of 1995 (44 U.S.C. Chapter 35), the Railroad Retirement Board (RRB) is forwarding two Information Collection Requests (ICR) to the Office of Information and Regulatory Affairs (OIRA), Office of Management and Budget (OMB). Our ICR describes the information we seek to collect from the public. Review and approval by OIRA ensures that we impose appropriate paperwork burdens.

The RRB invites comments on the proposed collections of information to determine (1) the practical utility of the collections; (2) the accuracy of the estimated burden of the collections; (3) ways to enhance the quality, utility, and clarity of the information that is the subject of collection; and (4) ways to minimize the burden of collections on respondents, including the use of automated collection techniques or other forms of information technology. Comments to the RRB or OIRA must contain the OMB control number of the ICR. For proper consideration of your comments, it is best if the RRB and OIRA receive them within 30 days of the publication date.

1. Title and purpose of information collection: Survivor Questionnaire; OMB 3220–0032.

Under Section 6 of the Railroad Retirement Act (RRA), benefits that may be due on the death of a railroad employee *or* a survivor annuitant include (1) a lump-sum death benefit (2) a residual lump-sum payment (3) accrued annuities due but unpaid at death, and (4) monthly survivor insurance payments. The requirements for determining the entitlement of possible beneficiaries to these benefits are prescribed in 20 CFR 234.

When the Railroad Retirement Board (RRB) receives notification of the death of a railroad employee or survivor annuitant, an RRB field office utilizes Form RL–94–F, Survivor Questionnaire, to secure additional information from surviving relatives needed to determine if any further benefits are payable under the RRA. Completion is voluntary. One response is requested of each respondent.

Previous Requests for Comments: The RRB has already published the initial 60-day notice (77 FR 51834 on August 27, 2012) required by 44 U.S.C. 3506(c)(2). That request elicited no comments.

Information Collection Request (ICR)

Title: Survivor Questionnaire .

OMB Control Number: 3220–0032.

Form(s) submitted: RL–94–F.

Type of request: Revision of a currently approved collection.

Affected public: Individuals or Households.

Abstract: Under Section 6 of the Railroad Retirement Act, benefits are payable to the survivors of the estates of deceased railroad employees. The collection obtains information used to determine if and to whom benefits are payable; such as a widow(er) due survivor benefits, an executor of the estate, or a payer of burial expenses.

Changes proposed: The RRB proposes collecting identifying information when a trustee pays the burial expenses; minor non-burden impacting clarification; and editorial changes to Form RL–94–F.

The burden estimate for the ICR is as follows:

Form No.	Annual responses	Time (minutes)	Burden (hours)
RL–94–F, Items 5–10, and 18	50	9	8
RL–94–F, Items 5–18	7,200	11	1,320
RL–94–F, Item 18 only	750	5	63
Total	8,000		1,391

2. Title and Purpose of information collection: Request for Medicare Payment; OMB 3220–0131.

Under Section 7(d) of the Railroad Retirement Act, the RRB administers the Medicare program for persons covered by the railroad retirement system. The collection obtains the information needed by Palmetto GBA, the Medicare carrier for railroad retirement beneficiaries, to pay claims for payments under Part B of the Medicare program. Authority for collecting the information is prescribed in 42 CFR 424.32.

The RRB currently utilizes Forms G–740S, Patient's Request for Medicare Payment, along with Centers for Medicare & Medicaid Services Form CMS–1500, to secure the information necessary to pay Part B Medicare Claims. One response is completed for each claim. Completion is required to obtain a benefit.

Previous Requests for Comments: The RRB has already published the initial 60-day notice (77 FR 51834 on September 4, 2012) required by 44 U.S.C. 3506(c)(2). That request elicited no comments.

Information Collection Request (ICR)

Title: Request for Medicare Payment.

OMB Control Number: 3220–0131.

Form(s) submitted: G–740S, CMS–1500.

Type of request: Revision of a currently approved collection.

Affected public: Individuals or Households.

Abstract: The RRB administers the Medicare program for persons covered by the Railroad Retirement System. The collection obtains the information needed by Palmetto GBA, the RRB's carrier, to pay claims for services covered under Part B of the program.

Changes proposed: The RRB is proposing minor, non-burden impacting editorial and cosmetic changes to RRB Form G–740S.

The burden estimate for the ICR is as follows:

Estimated annual number of respondents: See Justification (Item No. 12).

Total annual responses: 1.

Total annual reporting hours: 1.

3. Title and Purpose of information collection: Employer's Deemed Service Month Questionnaire; OMB 3220–0156.

Section 3(i) of the Railroad Retirement Act (RRA), as amended by Public Law 98–76, provides that the Railroad Retirement Board (RRB), under certain circumstances, may deem additional months of service in cases where an employee does not actually work in every month of the year, provided the employee satisfies certain eligibility requirements, including the existence of an employment relation between the employee and his or her employer. The procedures pertaining to the deeming of additional months of service are found in the RRB's regulations at 20 CFR 210, Creditable Railroad Service.

The RRB utilizes Form GL–99, Employer's Deemed Service Months Questionnaire, to obtain service and compensation information from railroad employers to determine if an employee can be credited with additional deemed months of railroad service. Completion is mandatory. One response is required for each RRB inquiry.

Previous Requests for Comments: The RRB has already published the initial 60-day notice (77 FR 51834 on August 27, 2012) required by 44 U.S.C. 3506(c)(2). That request elicited no comments.

Information Collection Request (ICR)

Title: Employer's Deemed Service Month Questionnaire.

OMB Control Number: 3220–0156.

Form(s) submitted: GL–99.

Type of request: Revision of a currently approved collection.

Affected public: Individuals or Households.

Abstract: Under Section 3(i) of the Railroad Retirement Act, the Railroad Retirement Board may deem months of service in cases where an employee does not actually work in every month of the year. The collection obtains service and compensation information from railroad employers needed to determine if an employee may be credited with additional months of railroad service.

Changes proposed: The RRB is proposing revisions to Form GL–99 to obtain only a ''Yes'' or ''No'' response regarding whether an employee was in an employment relationship with an employer during any months indicated on the GL–99 as *not worked.* Other minor non-burden impacting editorial changes are also proposed.

The burden estimate for the ICR is as follows:

Form No.	Annual responses	Time (minutes)	Burden (hours)
GL–99	4,000	2	133

Additional Information or Comments: Copies of the forms and supporting documents can be obtained from Dana Hickman at (312) 751–4981 or *Dana.Hickman@RRB.GOV.*

Comments regarding the information collection should be addressed to Charles Mierzwa, Railroad Retirement Board, 844 North Rush Street, Chicago, Illinois 60611–2092 or *Charles.Mierzwa@RRB.GOV* and to the OMB Desk Officer for the RRB, Fax: 202–395–6974, Email address: *OIRA_Submission@omb.eop.gov.*

Charles Mierzwa,

Chief of Information Resources Management.

[FR Doc. 2012–28124 Filed 11–19–12; 8:45 am]

BILLING CODE 7905–01–P

SECURITIES AND EXCHANGE COMMISSION

Sunshine Act Meeting

Notice is hereby given, pursuant to the provisions of the Government in the Sunshine Act, Public Law 94–409, that the Securities and Exchange Commission will hold a Closed Meeting on Tuesday, November 20, 2012 at 2:00 p.m.

Commissioners, Counsel to the Commissioners, the Secretary to the Commission, and recording secretaries will attend the Closed Meeting. Certain staff members who have an interest in the matters also may be present.

The General Counsel of the Commission, or his designee, has certified that, in his opinion, one or more of the exemptions set forth in 5 U.S.C. 552b(c)(3), (5), (7), 9(B) and (10) and 17 CFR 200.402(a)(3), (5), (7), 9(ii) and (10), permit consideration of the scheduled matters at the Closed Meeting.

Commissioner Walter as duty officer, voted to consider the items listed for the Closed Meeting in a closed session, and determined that no earlier notice thereof was possible.

The subject matter of the Closed Meeting will be:

Institution and settlement of injunctive actions;

Institution and settlement of administrative proceedings; and

Other matters relating to enforcement proceedings.

At times, changes in Commission priorities require alterations in the scheduling of meeting items.

For further information and to ascertain what, if any, matters have been added, deleted or postponed, please contact:

The Office of the Secretary at (202) 551–5400.

Dated: November 16, 2012.

Elizabeth M. Murphy,

Secretary.

[FR Doc. 2012–28354 Filed 11–16–12; 4:15 pm]

BILLING CODE 8011–01–P

SECURITIES AND EXCHANGE COMMISSION

[Release No. 34–68218; File No. SR–CBOE–2012–106]

Self-Regulatory Organizations; Chicago Board Options Exchange, Incorporated; Notice of Filing and Immediate Effectiveness of a Proposed Rule Change To Delay the Implementation Date of Changes to Market-Makers' Continuous Quoting Obligations

November 13, 2012.

Pursuant to Section 19(b)(1) of the Securities Exchange Act of 1934 (the ''Act''),[1] and Rule 19b–4 thereunder,[2] notice is hereby given that on November 1, 2012, Chicago Board Options Exchange, Incorporated (the ''Exchange'' or ''CBOE'') filed with the Securities and Exchange Commission (the ''Commission'') the proposed rule change as described in Items I and II below, which Items have been prepared by the Exchange. The Commission is publishing this notice to solicit comments on the proposed rule change from interested persons.

I. Self-Regulatory Organization's Statement of the Terms of Substance of the Proposed Rule Change

The Exchange proposes to delay the implementation date of changes to Market-Makers' continuous quoting obligations.

The text of the proposed rule change is available on the Exchange's Web site (*http://www.cboe.com/AboutCBOE/CBOELegalRegulatoryHome.aspx*), at the Exchange's Office of the Secretary, and at the Commission's Public Reference Room.

[1] 15 U.S.C. 78s(b)(1).

[2] 17 CFR 240.19b–4.

II. Self-Regulatory Organization's Statement of the Purpose of, and Statutory Basis for, the Proposed Rule Change

In its filing with the Commission, the Exchange included statements concerning the purpose of and basis for the proposed rule change and discussed any comments it received on the proposed rule change. The text of these statements may be examined at the places specified in Item IV below. The Exchange has prepared summaries, set forth in sections A, B, and C below, of the most significant aspects of such statements.

A. Self-Regulatory Organization's Statement of the Purpose of, and Statutory Basis for, the Proposed Rule Change

1. Purpose

On July 5, 2012, the Exchange submitted a rule change filing, which became effective on that date, to amend Rule 1.1(ccc), ''Continuous Electronic Quotes,'' to reduce to 90% the percentage of time for which a Market-Maker is required to provide continuous electronic quotes in an appointed option class on a given trading day. That filing also included a proposed rule change to amend Rules 8.13, 8.15A, 8.85, and 8.93 to increase to the lesser of 99% or 100% minus one call-put pair the percentage of series in each class in which Preferred Market-Makers, Lead Market-Makers, Designated Primary Market-Makers, and Electronic Designated Primary Market-Makers, respectively (collectively, ''Market-Makers''), must provide continuous electronic quotes.[3] The proposed rule changes in that filing were set to become operative on August 4, 2012.

The Exchange submitted another rule change filing on August 3, 2012, which became effective and operative upon filing, to delay implementation of these quoting obligation changes to provide Market-Makers with additional time to make necessary system changes to comply with the new quoting obligations. The filing indicated that the Exchange would announce the implementation date of the proposed rule change in a Regulatory Circular to be published no later than November 1, 2012, which implementation date would be no later than December 31, 2012.[4]

[3] Securities Exchange Act Release No. 34–67410 (July 11, 2012), 77 FR 42040 (July 17, 2012) (SR–CBOE–2012–064).

[4] Securities Exchange Act Release No. 34–67644 (August 13, 2012), 77 FR 49846 (August 17, 2012) (SR–CBOE–2012–077).

The purpose of this rule change filing is to again delay implementation of these quoting obligation changes to provide Market-Makers with additional time to make further necessary system changes to comply with the new quoting obligations. The Exchange will announce the implementation date of the proposed rule change in a Regulatory Circular to be published no later than 120 days following the effective date. The implementation date will be no later than 180 days following the effective date.

2. Statutory Basis

The Exchange believes the proposed rule change is consistent with the Act and the rules and regulations thereunder applicable to the Exchange and, in particular, the requirements of Section 6(b) of the Act.[5] Specifically, the Exchange believes the proposed rule change is consistent with the Section 6(b)(5)[6] requirements that the rules of an exchange be designed to promote just and equitable principles of trade, to prevent fraudulent and manipulative acts, to foster cooperation and coordination with persons engaged in regulating, clearing, settling, processing information with respect to, and facilitating transactions in securities, to remove impediments to and to perfect the mechanism for a free and open market and a national market system, and, in general, to protect investors and the public interest.

In particular, the Exchange believes that delaying the implementation date of these changes to Market-Makers' continuous quoting obligations to allow Market-Makers to further adjust their systems to be consistent with the new quoting obligations will provide efficiencies that will benefit investors and the public interest and encourage more efficient order entry practices by Market-Makers. The Exchange believes that additional time to allow Market-Maker's [sic] to adjust their systems will promote compliance by Market-Makers with the new quoting obligations. Providing Market-Makers with additional time to make necessary system adjustments that will allow them to comply with the new quoting obligations fosters cooperation between the Market-Makers and the Exchange, which monitors Market-Makers' compliance with quoting obligations. Additionally, the proposed rule change will allow the Exchange to announce an implementation schedule in a fair and orderly manner.

[5] 15 U.S.C. 78f(b).

[6] 15 U.S.C. 78f(b)(5).

B. Self-Regulatory Organization's Statement on Burden on Competition

CBOE does not believe that the proposed rule change will impose any burden on competition that is not necessary or appropriate in furtherance of the purposes of the Act.

C. Self-Regulatory Organization's Statement on Comments on the Proposed Rule Change Received From Members, Participants, or Others

The Exchange neither solicited nor received comments on the proposed rule change.

III. Date of Effectiveness of the Proposed Rule Change and Timing for Commission Action

The Exchange has filed the proposed rule change pursuant to Section 19(b)(3)(A)(iii) of the Act [7] and Rule 19b–4(f)(6) thereunder.[8] Because the proposed rule change does not: (i) Significantly affect the protection of investors or the public interest; (ii) impose any significant burden on competition; and (iii) become operative prior to 30 days from the date on which it was filed, or such shorter time as the Commission may designate, if consistent with the protection of investors and the public interest, the proposed rule change has become effective pursuant to Section 19(b)(3)(A) of the Act. [9] and Rule 19b–4(f)(6)(iii) thereunder.[10]

A proposed rule change filed under Rule 19b–4(f)(6) [11] normally does not become operative prior to 30 days after the date of the filing. However, pursuant to Rule 19b–4(f)(6)(iii),[12] the Commission may designate a shorter time if such action is consistent with the protection of investors and the public interest. The Exchange has indicated that it will not be able to announce an implementation date for the changes to the Market-Maker quoting obligations by November 1, 2012, as provided in proposed rule change filing SR–CBOE–2012–077,[13] because allowing Market-Makers additional time to adjust their systems will promote compliance by Market-Makers with the new quoting obligations. The Commission notes that the proposed rule change does not present any new, unique, or substantive issues, but rather is merely delaying the implementation date of an already effective rule change, and that waiver of the 30-day operative delay will allow the Exchange to announce an implementation schedule in an efficient manner. The Commission believes that waiving the 30-day operative delay is consistent with the protection of investors and the public interest and, therefore, designates the proposed rule change as operative upon filing.[14]

At any time within 60 days of the filing of the proposed rule change, the Commission summarily may temporarily suspend such rule change if it appears to the Commission that such action is necessary or appropriate in the public interest, for the protection of investors, or otherwise in furtherance of the purposes of the Act. If the Commission takes such action, the Commission shall institute proceedings to determine whether the proposed rule should be approved or disapproved.

IV. Solicitation of Comments

Interested persons are invited to submit written data, views, and arguments concerning the foregoing, including whether the proposed rule change is consistent with the Act. Comments may be submitted by any of the following methods:

Electronic Comments

- Use the Commission's Internet comment form (*http://www.sec.gov/rules/sro.shtml*); or
- Send an email to *rule-comments@sec.gov.* Please include File Number SR–CBOE–2012–106 on the subject line.

Paper Comments

- Send paper comments in triplicate to Elizabeth M. Murphy, Secretary, Securities and Exchange Commission, 100 F Street NE., Washington, DC 20549–1090.

All submissions should refer to File Number SR–CBOE–2012–106. This file number should be included on the subject line if email is used. To help the Commission process and review your comments more efficiently, please use only one method. The Commission will post all comments on the Commission's Internet Web site (*http://www.sec.gov/rules/sro.shtml*). Copies of the submission, all subsequent amendments, all written statements with respect to the proposed rule change that are filed with the Commission, and all written communications relating to the proposed rule change between the Commission and any person, other than those that may be withheld from the public in accordance with the provisions of 5 U.S.C. 552, will be available for Web site viewing and printing in the Commission's Public Reference Room, 100 F Street NE., Washington, DC 20549 on official business days between the hours of 10:00 a.m. and 3:00 p.m. Copies of such filing also will be available for inspection and copying at the principal office of the Exchange. All comments received will be posted without change; the Commission does not edit personal identifying information from submissions. You should submit only information that you wish to make available publicly. All submissions should refer to File Number SR–CBOE–2012–106 and should be submitted on or before December 11, 2012.

For the Commission, by the Division of Trading and Markets, pursuant to delegated authority.[15]

Kevin M. O'Neill,

Deputy Secretary.

[FR Doc. 2012–28134 Filed 11–19–12; 8:45 am]

BILLING CODE 8011–01–P

[7] 15 U.S.C. 78s(b)(3)(A)(iii).

[8] 17 CFR 240.19b–4(f)(6).

[9] 15 U.S.C. 78s(b)(3)(A).

[10] 17 CFR 240.19b–4(f)(6)(iii). The Exchange has requested that the Commission waive the requirement that the Exchange provide the Commission written notice of its intent to file the proposed rule change, along with a brief description and text of the proposed rule change, at least five business days prior to the date on which the Exchange filed the proposed rule change pursuant to Rule 19b–4(f)(6)(iii). The Commission hereby grants this request.

[11] 17 CFR 240.19b–4(f)(6).

[12] 17 CFR 240.19b–4(f)(6)(iii).

[13] *See supra* note 4.

[14] For purposes only of waiving the 30-day operative delay, the Commission has considered the proposed rule's impact on efficiency, competition, and capital formation. *See* 15 U.S.C. 78c(f).

[15] 17 CFR 200.30–3(a)(12).

SECURITIES AND EXCHANGE COMMISSION

[Release No. 34–68225; File No. AN–OCC–2012–04]

Self-Regulatory Organizations; The Options Clearing Corporation; Notice of Filing of Advance Notice To Revise the Method for Determining the Minimum Clearing Fund Size To Include Consideration of the Amount Necessary To Draw on Secured Credit Facilities

November 14, 2012.

Pursuant to Section 806(e)(1) of the Payment, Clearing, and Settlement Supervision Act of 2010 (''Clearing Supervision Act'') [1] and Rule 19b–4(n)(1)(i),[2] notice is hereby given that on October 18, 2012, The Options Clearing Corporation (''OCC'') filed with the Securities and Exchange Commission (''Commission'') the advance notice described in Items I, II, and III below, which Items have been prepared primarily by OCC. The Commission is

[1] 12 U.S.C. 5465(e)(1).

[2] 17 CFR 240.19b–4(n)(i).

publishing this notice to solicit comments on the advance notice from interested persons.

I. Clearing Agency's Statement of the Terms of Substance of the Advance Notice

OCC proposes to revise the method for determining the minimum clearing fund size to include consideration of the amount necessary for OCC to draw on its secured credit facilities.

II. Clearing Agency's Statement of the Purpose of, and Statutory Basis for, the Advance Notice

In its filing with the Commission, OCC included statements concerning the purpose of and basis for the advance notice and discussed any comments it received on the advance notice. The text of these statements may be examined at the places specified in Item IV below. OCC has prepared summaries, set forth in sections (A), (B), and (C) below, of the most significant aspects of these statements.[3]

(A) Clearing Agency's Statement of the Purpose of, and Statutory Basis for, the Advance Notice

The purpose of this advance notice is to implement a minimum clearing fund size equal to 110% of the amount of committed credit facilities secured by the clearing fund to ensure that the amount of the clearing fund likely will exceed the required collateral value that would be necessary for OCC to be able to draw in full on such credit facilities. OCC's clearing fund is primarily intended to provide a high degree of assurance that market integrity will be maintained in the event that one or more clearing members or other specified entities to which OCC has credit exposure fails to meet its obligations.[4] This includes the potential use of the clearing fund as a source of liquidity should it ever be the case that OCC is unable to obtain prompt delivery of, or convert promptly to cash, any asset credited to the account of a suspended clearing member.

On September 23, 2011, the Commission approved a proposed rule change by OCC to establish the size of OCC's clearing fund as the amount that is required, within a confidence level selected by OCC, to sustain the maximum anticipated loss under a defined set of scenarios as determined by OCC, subject to a minimum clearing fund size of $1 billion.[5] OCC implemented this change in May 2012. Until that time, the size of OCC's clearing fund was calculated each month as a fixed percentage of the average total daily margin requirement for the preceding month, provided that the calculation resulted in a clearing fund of $1 billion or more.[6]

Under the formula that is implemented for determining the size of the clearing fund as a result of the May 2012 change, OCC's Rules provide that the amount of the fund is equal to the larger of the amount of the charge to the fund that would result from (i) a default by the single ''clearing member group'' [7] whose default would be likely to result in the largest draw against the clearing fund or (ii) an event involving the near-simultaneous default of two randomly-selected ''clearing member groups'' in each case as calculated by OCC with a confidence level selected by OCC.[8] The size of the clearing fund continues to be recalculated monthly, based on a monthly averaging of daily calculations for the previous month, and it is subject to a requirement that its minimum size may not be less than $1 billion.

This minimum dollar size for OCC's clearing fund is the subject of this advance notice. OCC maintains committed credit facilities that are secured by the clearing fund in order to provide a source of liquidity in the event of a default by a clearing member or one of OCC's settlement banks. The change arises out of a regular review that OCC conducts in order to determine the appropriate aggregate amount of such committed credit facilities. In addition to its liquidity exposure to the potential failure of a clearing member, OCC also evaluates its liquidity exposure to settlement banks in respect of their ability to wire net settlement proceeds in time for OCC to meet its settlement obligations at one or more of OCC's other settlement banks as well as OCC's credit exposure to banks that issue letters of credit on behalf of clearing members as a form of margin.

OCC's committed credit facilities are secured by assets in the clearing fund and certain margin deposits of suspended clearing members. In light of the uncertainty regarding the amount of margin assets of a suspended clearing member that might be eligible at any given point to support borrowing under the secured credit facilities, OCC has considered the availability of funds based on a consideration of the amount of the clearing fund deposits available as collateral. To draw on the full amount of its credit facilities secured by the clearing fund, the size of the clearing fund would need to be approximately $2.2 billion. The $2.2 billion figure reflects a 10% increase above the total size of such credit facilities, which is meant to account for the percentage discount applied to collateral pledged by OCC in determining the amount available for borrowing.

Based on monthly recalculation information, the size of OCC's clearing fund during the period from July 2011 to July 2012 was less than $2.2 billion on eight occasions. Therefore, to address the risk that the assets in the clearing fund might at any time be insufficient to enable OCC to meet potential liquidity needs by fully accessing its committed credit facilities that are secured by the clearing fund, the proposed rule change described by the advance notice would amend the requirement that the minimum size of the clearing fund cannot be less than $1 billion by providing instead that the minimum clearing fund size would be equal to the greater of either $1 billion or 110% of the amount of such committed credit facilities. OCC proposes to denote the credit facility component of the minimum clearing fund requirement as a percentage of the total amount of the credit facilities that

[3] The Commission has modified the text of the summaries prepared by OCC.

[4] Under Article VIII, Section 1 of OCC's By-Laws, the clearing fund may be used to pay losses suffered by OCC: (1) As a result of the failure of a clearing member to perform its obligations with regard to any exchange transaction accepted by OCC; (2) as a result of a clearing member's failure to perform its obligations in respect of an exchange transaction or an exercised/assigned options contract, or any other contract or obligations in respect of which OCC is liable; (3) as a result of the failure of a clearing member to perform its obligations in respect of stock loan or borrow positions; (4) as a result of a liquidation of a suspended clearing member's open positions; (5) in connection with protective transactions of a suspended clearing member; (6) as a result of a failure of any clearing member to make any other required payment or to render any other required performance; or (7) as a result of a failure of any bank or securities or commodities clearing organization to perform its obligations to OCC.

[5] Securities Exchange Act Release No. 34–65386 (September 23, 2011), 76 FR 60572 (September 29, 2011) (SR–OCC–2011–10).

[6] If the calculation did not result in a clearing fund size of $1 billion or more, then the percentage of the average total daily margin requirement for the preceding month that resulted in a fund level of at least $1 billion would be applied. However, in no event was the percentage permitted to exceed 7%. With the rule change approved in September 2011, this 7% limiting factor on the minimum clearing fund size was eliminated.

[7] The term ''clearing member group'' is defined in OCC's By-Laws to mean a clearing member and any member affiliates of the clearing member.

[8] The confidence levels employed by OCC in calculating the charge likely to result from a default by OCC's largest ''clearing member group'' and the default of two randomly-selected ''clearing member groups'' were approved by the Commission at 99% and 99.9%, respectively. However, the Commission approval order notes that OCC retains discretion to employ different confidence levels in these calculations provided that OCC will not employ confidence levels of less than 99% without first filing a proposed rule change.

OCC actually secures with clearing fund assets because OCC negotiates these credit facility agreements, including size and other terms, on an annual basis and the total size is therefore subject to change.

(B) Clearing Agency's Statement on Burden on Competition

OCC does not believe that the proposed changes contained in the advance notice will have any impact or impose any burden on competition.

(C) Clearing Agency's Statement on Comments on the Advance Notice Received From Members, Participants, or Others

No written comments were solicited or received with respect to the proposed rule changes contained in the advance notice.

III. Date of Effectiveness of the Advance Notice and Timing for Commission Action

The proposed changes contained in the advance notice may be implemented pursuant to Section 806(e)(1)(G) of Clearing Supervision Act [9] if the Commission does not object to the proposed changes within 60 days of the later of (i) the date that the advance notice was filed with the Commission or (ii) the date that any additional information requested by the Commission is received. The clearing agency shall not implement the proposed changes contained in the advance notice if the Commission objects to the proposed changes.

The Commission may extend the period for review by an additional 60 days if the proposed changes raise novel or complex issues, subject to the Commission providing the clearing agency with prompt written notice of the extension. Proposed changes may be implemented in fewer than 60 days from the date the advance notice is filed, or the date further information requested by the Commission is received, if the Commission notifies the clearing agency in writing that it does not object to the proposed changes and authorizes the clearing agency to implement the proposed changes on an earlier date, subject to any conditions imposed by the Commission.

The proposals contained in this advance notice shall not take effect until all regulatory actions required with respect to the proposals are completed.[10] The clearing agency shall post notice on its Web site of proposed changes that are implemented.

IV. Solicitation of Comments

Interested persons are invited to submit written data, views, and arguments concerning the foregoing. Comments may be submitted by any of the following methods:

Electronic Comments

- Use the Commission's Internet comment form (*http://www.sec.gov/rules/sro.shtml*); or
- Send an email to *rule-comments@sec.gov*. Please include File Number AN–OCC–2012–04 on the subject line.

Paper Comments

- Send paper comments in triplicate to Elizabeth M. Murphy, Secretary, Securities and Exchange Commission, 100 F Street NE., Washington, DC 20549–1090.

All submissions should refer to File Number AN–OCC–2012–04. This file number should be included on the subject line if email is used. To help the Commission process and review your comments more efficiently, please use only one method. The Commission will post all comments on the Commission's Internet Web site (*http://www.sec.gov/rules/sro.shtml*). Copies of the submission, all subsequent amendments, all written statements with respect to the advance notice that are filed with the Commission, and all written communications relating to the advance notice between the Commission and any person, other than those that may be withheld from the public in accordance with the provisions of 5 U.S.C. 552, will be available for Web site viewing and printing in the Commission's Public Reference Room, 100 F Street NE., Washington, DC 20549, on official business days between the hours of 10:00 a.m. and 3:00 p.m. Copies of such filings also will be available for inspection and copying at the principal office of OCC and on OCC's Web site at *http://www.optionsclearing.com/components/docs/legal/rules_and_bylaws/sr_occ_12_19.pdf.*

All comments received will be posted without change; the Commission does not edit personal identifying information from submissions. You should submit only information that you wish to make available publicly. All submissions should refer to File Number AN–OCC–2012–04 and should be submitted on or before December 11, 2012.

By the Commission.

Kevin O'Neill,

Deputy Secretary.

[FR Doc. 2012–28143 Filed 11–19–12; 8:45 am]

BILLING CODE 8011–01–P

[9] 12 U.S.C. 5465.

[10] OCC also filed the proposals contained in this advance notice as a proposed rule change under Section 19(b)(1) of the Exchange Act and Rule 19b–4 thereunder. 15 U.S.C. 78s(b)(1); 17 CFR 240.19b–4. Pursuant to Section 19(b)(2) of the Exchange Act, within forty-five days of the date of publication of the proposed rule change in the **Federal Register** or within such longer period up to ninety days if the Commission designates or the self-regulatory organization consents the Commission will either: (i) By order approve or disapprove the proposed rule change or (ii) institute proceedings to determine whether the proposed rule change should be disapproved. 17 U.S.C. 78s(b)(2)(A). *See* Securities Exchange Act Release No. 34–68130 (November 1, 2012), 77 FR 66900 (November 7, 2012) (SR–OCC–2012–19).

SECURITIES AND EXCHANGE COMMISSION

[Release No. 34–68230; File No. SR–NYSEArca–2012–122]

Self-Regulatory Organizations; NYSE Arca, Inc.; Notice of Filing and Immediate Effectiveness of a Proposed Rule Change To Amend the NYSE Arca Options Fee Schedule To Introduce Fees for the Use of Ports

November 14, 2012.

Pursuant to Section 19(b)(1) [1] of the Securities Exchange Act of 1934 (the ''Act''),[2] and Rule 19b–4 thereunder,[3] notice is hereby given that on November 1, 2012, NYSE Arca, Inc. (the ''Exchange'' or ''NYSEArca'') filed with the Securities and Exchange Commission (the ''Commission'') the proposed rule change as described in Items I, II, and III below, which Items have been prepared by the self-regulatory organization. The Commission is publishing this notice to solicit comments on the proposed rule change from interested persons.

I. Self-Regulatory Organization's Statement of the Terms of Substance of the Proposed Rule Change

The Exchange proposes to amend the NYSE Arca Options Fee Schedule (the ''Fee Schedule'') to introduce fees for the use of ports. The text of the proposed rule change is available on the Exchange's Web site at *www.nyse.com,* at the principal office of the Exchange, and at the Commission's Public Reference Room.

II. Self-Regulatory Organization's Statement of the Purpose of, and Statutory Basis for, the Proposed Rule Change

In its filing with the Commission, the self-regulatory organization included

[1] 15 U.S.C. 78s(b)(1).

[2] 15 U.S.C. 78a.

[3] 17 CFR 240.19b–4.

statements concerning the purpose of and basis for the proposed rule change and discussed any comments it received on the proposed rule change. The text of those statements may be examined at the places specified in Item IV below. The Exchange has prepared summaries, set forth in sections A, B, and C below, of the most significant parts of such statements.

A. Self-Regulatory Organization's Statement of the Purpose of, and the Statutory Basis for, the Proposed Rule Change

1. Purpose

The Exchange proposes to amend the Fee Schedule to introduce monthly fees for the use of ports that provide connectivity to the Exchange's trading systems (i.e., ports for entry of orders and/or quotes (''order/quote entry ports'')) as well as for ports that allow for the receipt of ''drop copies'' of order or transaction information (''drop copy ports'' and, together with order/quote entry ports, ''ports'').[4] The Exchange proposes to implement the fee changes on November 1, 2012.

The Exchange currently makes order/quote entry ports available for connectivity to its trading systems, but does not currently charge for order/quote entry ports related to option activity on NYSE Arca Options. The Exchange proposes to implement fees for order/quote entry ports on a per port basis. More specifically, the Exchange proposes to charge $200 per port per month for order/quote entry ports;[5] provided, however, that (i) the first five order/quote entry ports authorized for option activity on NYSE Arca Options would not be charged and the proposed $200 per port fee would be decreased to $100 per port per month for ports 101 or more,[6] and (ii) unutilized order/quote entry ports that connect to the Exchange via its backup datacenter would be considered established for backup purposes and not charged port fees.[7]

The Exchange proposes that unutilized order/quote entry ports that connect to the Exchange via its backup datacenter and are not utilized be considered established for backup purposes and not charged port fees. However, if activity were conducted through one of these order/quote entry ports, whether for backup or any other purposes, port fees would apply for the relevant month or months. In this regard, the Exchange notes that it monitors usage of these particular ports. Accordingly, if an order/quote were sent to the Exchange via one of these ports, then the port would be charged the applicable monthly port fee.

The Exchange proposes to implement a fee of $500 for drop copy ports.[8] Additionally, the Exchange proposes to specify that only one fee per drop copy port would apply, even if the port receives drop copies from multiple order/quote entry ports and/or drop copies for activity on both NYSE Arca Options and NYSE Arca Equities.

The Exchange also proposes that drop copy ports that connect to the Exchange via its backup datacenter not be charged if the drop copy port is configured such that it is duplicative of another drop copy port of the same user, regardless of whether the drop copy port is utilized or not. The Exchange is proposing to treat drop copy ports in this manner because a firm would not derive any value or utility from a drop copy port in the datacenter that is duplicative of another drop copy port that it already has outside of the datacenter, in that, because drop copy ports are used to send duplicative information, a second drop copy port carrying the same information would not be a useful resource, except for a backup purpose.

Overall, the Exchange believes that the changes proposed herein will result in a method of billing for ports that is closely aligned with the needs of firms with ports and permit the Exchange to remain competitive with other exchanges with respect to fees charged for ports.[9] The Exchange notes that the proposed changes are not otherwise intended to address any other issues surrounding ports or port fees and that the Exchange is not aware of any problems that port users would have in complying with the proposed change.

The Exchange proposes to implement these changes on November 1, 2012. In this regard, the Exchange notes that billing for ports would be based on the number of ports on the third business day prior to the end of the month. In addition, the level of activity with respect to a particular port would not affect the assessment of monthly fees, such that, except for ports that are not charged and ports considered established for backup purposes, even if a particular port is not used, a port fee would still apply.

2. Statutory Basis

The Exchange believes that the proposed rule change is consistent with Section 6(b) of the Securities Exchange Act of 1934 (the ''Act''),[10] in general, and furthers the objectives of Section 6(b)(4) of the Act,[11] in particular, because it provides for the equitable allocation of reasonable dues, fees, and other charges among its members, issuers and other persons using its facilities and does not unfairly discriminate between customers, issuers, brokers or dealers.

Overall, the Exchange believes that the proposed changes, including the rates proposed, are reasonable because the fees charged for order/quote entry ports and drop copy ports are expected to permit the exchange to offset, in part, its connectivity costs associated with making such ports available, including costs based on gateway software and hardware enhancements and resources dedicated to gateway development, quality assurance, and support. In this regard, the Exchange believes that its fees are competitive with those charged by other venues, and that in some cases its port fees are less expensive than many of its primary competitors.[12] The Exchange believes that the changes proposed herein will result in a method

[4] Firms receive confirmations of their orders and receive execution reports via the order/quote entry port that is used to enter the order or quote. A ''drop copy'' contains redundant information that a firm chooses to have ''dropped'' to another destination (e.g., to allow the firm's back office and/or compliance department, or another firm—typically the firm's clearing broker—to have immediate access to the information). Such drop copies can only be sent via a drop copy port. Drop copy ports cannot be used to enter orders and/or quotes.

[5] The Exchange currently charges for order/quote entry ports related to equity activity on NYSE Arca Equities. Via a separate proposed rule change, the Exchange is proposing changes to the port fees applicable to equity activity on NYSE Arca Equities. *See* SR–NYSEArca–2012–123. In this regard, separate port fees would be charged for an order/quote entry port that is authorized for both equity and option order/quote entry.

[6] For example, if five ports are authorized for order/quote activity, there would be no charge. However, a sixth order/quote entry port would be charged $200. 50 order/quote entry ports would be charged $9,000 total (i.e., 45 × $200) and 100 order/quote entry ports would be charged $19,000 total (i.e., 95 × $200). However, 120 order/quote entry ports would be charged $21,000 total (i.e., 95 × $200 plus 20 × $100). For purposes of calculating the number of order/quote entry ports, the Exchange proposes to aggregate the ports of affiliates. An affiliate would be a person or firm that directly, or indirectly through one or more intermediaries, controls or is controlled by, or is under common control with, the firm. *See* NYSE Arca Rule 1.1(a).

[7] The Exchange's backup datacenter is currently located in Chicago, Illinois.

[8] *See supra* note 4.

[9] For example, the charge for connectivity to the NASDAQ Stock Market LLC (''NASDAQ'') NY-Metro and Mid-Atlantic Datacenters is $500 and a separate charge for Pre-Trade Risk Management ports is applicable, which ranges from $400 to $600 and is capped at $25,000 per firm per month. Also, the BATS Exchange, Inc. (''BZX'') charges $400 per month per pair (primary and secondary data center) for logical ports. Additionally, EDGA Exchange, Inc. (''EDGA'') and EDGX Exchange, Inc. (''EDGX'') each charge $500 per port. EDGA and EDGX also provide the first five ports for free.

[10] 15 U.S.C. 78f(b).

[11] 15 U.S.C. 78f(b)(4).

[12] *See supra* note 9.

of billing for ports that is closely aligned with the needs of firms with ports.

The Exchange believes that the proposed methodology for billing for order/quote entry ports is reasonable because it will allow a firm to request, and pay for, the specific number of ports that it requires. This aspect of the proposed change is also equitable and not unfairly discriminatory because it will result in charges for order/entry ports being based on the number of ports utilized. This aspect of the proposed change is also equitable and not unfairly discriminatory because it will apply on an equal basis for all ports on the Exchange, except for order/quote entry ports in the backup datacenter that are not utilized.[13]

The Exchange believes that it is reasonable to charge $200 per port per month for order/quote entry ports because it is comparable to the rates of other exchanges.[14] The Exchange also believes that the fees are equitable and not unfairly discriminatory because they would apply to all users of order/quote entry ports on the Exchange, subject to the exception noted above.

The Exchange also believes that it is equitable and not unfairly discriminatory to provide the first five option order/quote entry ports for free and to decrease the rate to $100 for ports 101 and greater. Specifically, providing the first five option ports without charge would allow firms to adapt to the introduction of the fees for ports. Additionally, decreasing the fee to $100 per port for more than 100 ports would permit those firms that have multiple order/quote entry ports to maintain connections to the Exchange, despite the port fees that would apply as a result of this proposed change. Further, the Exchange notes that option Market Makers would, generally, be the type of market participant that would have more than 100 ports. This is due in large part to the significant number of series that exist for any particular option class[15] and the corresponding obligations that NYSE Arca Option Market Makers have to maintain a bid or offer in assigned classes. Furthermore, Market Makers that quote across a significant number, if not all, of the 2652 classes traded on the Exchange[16] have responsibility for upwards of 433,000 individual option series. Accordingly, the level of activity that is required to satisfy the quoting obligations, which directly relates to the number of ports needed, is such that the Exchange believes it is equitable and not unfairly discriminatory to provide the first five option order/quote entry ports for free and to decrease the per port charge for firms that have more than 100 order/quote entry ports on the Exchange.[17]

The Exchange believes that the proposed new fee for drop copy ports is reasonable because it will result in a fee being charged for the use of technology and infrastructure provided by the Exchange. In this regard, the Exchange believes that the rate is reasonable because it is comparable to the rate charged by other exchanges for drop copy ports.[18] Furthermore, the Exchange believes that the proposed rate for a drop copy port is reasonable because, when compared to the proposed rate for order/quote entry ports, it reflects the level of resources required of the Exchange to establish and maintain the port, including the various sources from which data comes (i.e., establishing connections to order/quote entry ports as well as, in certain circumstances, to order/quote entry ports on both NYSE Arca Options and NYSE Arca Equities). The proposed rate is also reasonable in light of the functional/operational differences between a drop copy port and an order/quote entry port (e.g., that configuration and monitoring of the drop copy port is more substantial and because drop copy ports capture cumulative activity).

The Exchange also believes that it is reasonable that only one fee per drop copy port would apply, even if the port receives drop copies from multiple order/quote entry ports and/or from both NYSE Arca Options and NYSE Arca Equities, because the purpose of drop copies is such that a trading unit's or a firm's entire order and execution activity is captured, including with respect to both equities and options. This is also reflected in the rate of $500 that is proposed for drop copy ports, which is higher than the rate proposed for order/quote entry ports. The Exchange believes that the proposed new fee for drop copy ports is equitable and not unfairly discriminatory because it will apply on an equal basis to all users of drop copy ports and to all drop copy ports on the Exchange, except for ports in the backup datacenter.[19] In this regard, all firms are able to request drop copy ports, as is the case with order/quote entry ports.

The Exchange believes that it is reasonable to not charge for order/quote entry ports in its backup datacenter that are not utilized. However, the exchange does not restrict firms from using order/quote entry ports from the backup datacenter and, as described above, if one of these ports is utilized for order/quote entry, then port fees would apply. The Exchange believes that this is equitable and not unfairly discriminatory because it would permit firms to have ports established for backup purposes, should they ever be needed, without the burden of paying for such ports when they are not utilized. The Exchange believes this is equitable and not unfairly discriminatory because firms will not be disincentivized from requesting backup ports because of a fee that may otherwise apply. This would contribute to the efficiency of a backup process if primary order/quote entry ports ever became unavailable.

The Exchange also believes that it is reasonable to not charge for drop copy ports in its backup datacenter if configured such that it is duplicative of another drop copy port of the same user, regardless of whether the drop copy port is utilized or not. The Exchange believes that it is reasonable to treat drop copy ports in this manner because a firm would not derive any value/use from a drop copy port in the datacenter that is duplicative of another drop copy port that it already has outside of the datacenter (i.e., because drop copy ports are used to send duplicative information anyways, a second drop copy port carrying the same information would not be a useful resource), except for a backup purpose. The Exchange believes that this is equitable and not unfairly discriminatory because it would permit firms to have ports established for drop copy purposes in the backup datacenter, should they ever be needed, without the burden of paying for such ports. Because the drop copy port would not be providing any information that the firm did not already have, since the port would be configured such that it is duplicative of another drop copy port of the same user, the Exchange believes that it is equitable and not unfairly discriminatory to treat order/quote entry ports and drop copy ports differently in this manner. The Exchange believes this is also equitable and not unfairly discriminatory because firms will not be disincentivized from requesting backup drop copy ports because of a fee that may otherwise apply. This would contribute to the efficiency of a backup

[13] The Exchange describes below how the proposed changes regarding the backup datacenter are consistent with the Act.

[14] *See supra* note 9.

[15] For example, as of October 18, 2012, there were more than 1800 individual option series overlying Google, Inc.

[16] As of October 18, 2012.

[17] *See supra* note 6.

[18] *See supra* note 9.

[19] *See supra* note 13.

process if primary drop copy ports ever became unavailable.

Finally, the Exchange notes that it operates in a highly competitive market in which market participants can readily favor competing venues. In such an environment, the Exchange must continually review, and consider adjusting, its fees and credits to remain competitive with other exchanges. For the reasons described above, the Exchange believes that the proposed rule change reflects this competitive environment.

B. Self-Regulatory Organization's Statement on Burden on Competition

The Exchange does not believe that the proposed rule change will impose any burden on competition that is not necessary or appropriate in furtherance of the purposes of the Act.

C. Self-Regulatory Organization's Statement on Comments on the Proposed Rule Change Received From Members, Participants, or Others

No written comments were solicited or received with respect to the proposed rule change.

III. Date of Effectiveness of the Proposed Rule Change and Timing for Commission Action

The foregoing rule change is effective upon filing pursuant to Section 19(b)(3)(A) [20] of the Act and subparagraph (f)(2) of Rule 19b–4 [21] thereunder, because it establishes a due, fee, or other charge imposed by the NYSE Arca.

At any time within 60 days of the filing of such proposed rule change, the Commission summarily may temporarily suspend such rule change if it appears to the Commission that such action is necessary or appropriate in the public interest, for the protection of investors, or otherwise in furtherance of the purposes of the Act.

IV. Solicitation of Comments

Interested persons are invited to submit written data, views, and arguments concerning the foregoing, including whether the proposed rule change is consistent with the Act. Comments may be submitted by any of the following methods:

Electronic Comments

- Use the Commission's Internet comment form (*http://www.sec.gov/rules/sro.shtml*); or
- Send an email to *rule-comments@sec.gov*. Please include File Number SR–NYSEArca–2012–122 on the subject line.

Paper Comments

- Send paper comments in triplicate to Elizabeth M. Murphy, Secretary, Securities and Exchange Commission, 100 F Street NE., Washington, DC 20549–1090.

All submissions should refer to File Number SR–NYSEArca–2012–122. This file number should be included on the subject line if email is used. To help the Commission process and review your comments more efficiently, please use only one method. The Commission will post all comments on the Commission's Internet Web site (*http://www.sec.gov/rules/sro.shtml*). Copies of the submission, all subsequent amendments, all written statements with respect to the proposed rule change that are filed with the Commission, and all written communications relating to the proposed rule change between the Commission and any person, other than those that may be withheld from the public in accordance with the provisions of 5 U.S.C. 552, will be available for Web site viewing and printing in the Commission's Public Reference Room, 100 F Street NE., Washington, DC 20549–1090, on official business days between the hours of 10:00 a.m. and 3:00 p.m. Copies of the filing will also be available for inspection and copying at the NYSE's principal office and on its Internet Web site at *www.nyse.com*. All comments received will be posted without change; the Commission does not edit personal identifying information from submissions. You should submit only information that you wish to make available publicly. All submissions should refer to File Number SR–NYSEArca–2012–122 and should be submitted on or before December 11, 2012.

For the Commission, by the Division of Trading and Markets, pursuant to delegated authority.[22]

Kevin M. O'Neill,

Deputy Secretary.

[FR Doc. 2012–28137 Filed 11–19–12; 8:45 am]

BILLING CODE 8011–01–P

[20] 15 U.S.C. 78s(b)(3)(A).

[21] 17 CFR 240.19b–4(f)(2).

[22] 17 CFR 200.30–3(a)(12).

SECURITIES AND EXCHANGE COMMISSION

[Release No. 34–68219; File No. SR–CHX–2012–15]

Self-Regulatory Organizations; Chicago Stock Exchange, Inc.; Notice of Filing and Immediate Effectiveness of Proposed Rule Change To Amend Its Order Cancellation Fee

November 13, 2012.

Pursuant to Section 19(b)(1) of the Securities Exchange Act of 1934 (''Act'') [1] and Rule 19b–4 thereunder,[2] notice is hereby given that on November 2, 2012, the Chicago Stock Exchange, Inc. (''CHX'' or ''Exchange'') filed with the Securities and Exchange Commission (the ''Commission'') the proposed rule change as described in Items I, II and III below, which Items have been prepared by the Exchange. CHX has filed the proposal pursuant to Section 19(b)(3)(A) of the Act [3] and Rule 19b–4(f)(2) thereunder,[4] which renders the proposal effective upon filing with the Commission. The Commission is publishing this notice to solicit comments on the proposed rule change from interested persons.

I. Self-Regulatory Organization's Statement of the Terms of the Substance of the Proposed Rule Change

The CHX proposes to amend its Schedule of Fees and Assessments (the ''Fee Schedule''), effective November 2, 2012, relating to its order cancellation fee for Participants entering and subsequently cancelling order under certain circumstances. The text of this proposed rule change is available on the Exchange's Web site at *http://www.chx.com/rules/proposed_rules.htm* and in the Commission's Public Reference Room, 100 F Street NE., Washington, DC 20549.

II. Self-Regulatory Organization's Statement of the Purpose of, and Statutory Basis for, the Proposed Rule Change

In its filing with the Commission, the CHX included statements concerning the purpose of and basis for the proposed rule changes and discussed any comments it received regarding the proposal. The text of these statements may be examined at the places specified in Item IV below. The CHX has prepared summaries, set forth in sections A, B and C below, of the most significant aspects of such statements.

[1] 15 U.S.C. 78s(b)(1).

[2] 17 CFR 240.19b–4.

[3] 15 U.S.C. 78s(b)(3)(A).

[4] 17 CFR 240.19b–4(f)(2).

A. Self-Regulatory Organization's Statement of the Purpose of, and Statutory Basis for, the Proposed Rule Change

1. Purpose

History of the CHX Order Cancellation Fee

Beginning in January 2010, the Exchange published Fee Schedule imposed a charge for order cancellations in issues priced $1.00 per share or more [5] submitted by Participants whose orders rarely were at or near the National Best Bid or Offer (''NBBO''), herein referred to as the ''original cancellation fee.'' [6] The application of the original order cancellation fee depended, *inter alia,* on a calculation involving the number of Wide orders (defined as display-eligible orders in the Matching System which are two (2) or more cents away from the NBBO), Quotable orders (all other display-eligible orders), the number of trades executed and number of cancellations submitted by a Participant in a month.[7] The purpose of the original order cancellation fee was to incent Participants to submit orders that were close to the NBBO and to compensate the Exchange for the systems and operational costs and burdens associated with handling and recording orders that were rarely executed.

However, soon after the imposition of the original order cancellation fee, the Exchange had observed that the number of unexecuted and displayed orders had actually increased for certain Participants. It was apparent to the Exchange that in order to avoid application of the cancellation fee, certain Participants were submitting Quotable orders to the CHX's Matching System, but for an extremely short duration, rendering such activity negligible. In addition to avoiding order cancellation fees, this quotation activity actually exacerbated the operational costs which the Exchange sought to avoid by creating the order cancellation fee in the first place. The Exchange had observed that those firms entering the limited durational orders described above conducted much of their business on our trading facilities in Exchange Traded Funds (''ETFs''), Exchange Traded Notes (''ETNs'') or Exchange Traded Vehicles (''ETVs''), collectively referred to as Exchange Traded Products (''ETPs'').[8] As such, in August 2010, the Exchange amended its order cancellation fee to exclude all orders, transactions and cancellation activity in ETPs from the cancellation fee calculation, herein referred to as the ''modified order cancellation fee.''

Nevertheless, after the modified order cancellation fee went into effect, the Exchange observed that certain Participants had found a number of methods for avoiding the application of the modified order cancellation fee. For example, certain Participants submitted Quotable orders to the CHX's Matching System in *non*-ETPs, but for an extremely short duration. In other cases, Participants submitted a large number of Quotable orders in very thinly traded securities prior to the end of the month. These and other similar methods were used by Participants to reduce the order cancellation ratio and therefore, their cancellation fee liability, without a corresponding increase in order executions. As such, in September 2011, the Exchange revamped its order cancellation fee methodology, herein referred to as the ''current order cancellation fee.'' [9]

The current order cancellation fee utilizes a formula, calculated on a daily basis, which divides the Participant's total cancelled volume in a given issue (''cvissue'') by the Participant's total executed volume in that issue (''exvissue''). In those instances where a Participant's daily activity in a given issue exceeds a cancellation ratio of 30, the Exchange imposes an order cancellation fee of $.30 on each cancellation in that issue for that day and bills such fees on a monthly basis. By only crediting Participants with Quotable orders of the same issue as Wide orders, the Exchange sought to eliminate the practice of quoting in thinly-traded stocks to reduce cancellation fee liability. Furthermore, by imposing the cancellation fee on a daily basis, the Exchange sought to eliminate end-of-the-month fee avoidance trading activity.

After the current order cancellation fee went into effect, there has been a noticeable reduction in the aforementioned ''gaming'' of the order cancellation fee formula. However, the Exchange submits that this fee mechanism can be further perfected to promote display liquidity (*i.e.,* the submission of more competitive Quotable orders). As such, further changes to the current order cancellation fee formula are necessary.

Proposed Order Cancellation Fee

The Exchange now proposes to readopt the original order cancellation fee, with amendments to provide for the *daily* calculation of the order cancellation fee per security and to incorporate new order cancellation formula parameters with values set security-type specific (*i.e.,* for each *derivative and non-derivative* tape A, B and C security types). The Exchange submits that these changes will better incentivize Participants to submit orders near the NBBO and will allow the Exchange to better combat against ''gaming'' of the order cancellation fee formula and to compensate the Exchange for the processing and electronic storage costs associated with orders which ''quote around'' the NBBO and rarely execute.

In determining whether the proposed order cancellation fee would be imposed, the Exchange proposes to utilize a formula that subtracts from the total daily number of Wide or ''W'' orders in a given security, the product of Near or ''N'' orders [10] in the same security submitted by the Participant in the Regular Trading Session in a given day and its corresponding N order multiplier or ''N_{mult}.'' The difference between these two values is then divided by ''E,'' which is defined as the greater of (a) one (1) or (b) the sum of all Wide and Near orders in a given security that are submitted and executed (in whole or in part) in the Regular Trading Session (excluding cross transactions) on a given day.[11] If the remaining value is equal to or greater than the corresponding ''Cancellation Ratio'' for that security, a corresponding

[5] The Exchange excluded securities priced under $1 per share from being subject to order cancellation fees, as it did not appear that the activity in those issues gave rise to the same concerns as securities priced at or greater than $1 per share. The Exchange continues to find this to be the case and proposes to maintain the exclusion of securities priced under $1 per share from order cancellation fees.

[6] *See* Exchange Act Release No. 61392 (Jan. 21, 2010), 75 F.R. 4436 (Jan. 27, 2010) (SR–CHX–2010–02).

[7] Other requirements included that the trading activity must have occurred in the Regular Trading Session and concerned securities priced $1 per share or more. Also, cancellations arising from ''Immediate or Cancel'' or ''Fill or Kill'' order types were excluded from the calculation, as well as execution of cross orders.

[8] *See* Securities Exchange Act Release No. 61392 (January 21, 2010), 75 F.R. 4436 (Jan. 27, 2010) (SR–CHX–2010–02).

[9] *See* Securities Exchange Act Release No. 65268 (September 6, 2011), 76 FR 56246 (September 12, 2011) (SR–CHX–2011–25).

[10] ''Near'' is the same as ''Quotable,'' as used in the original and modified order cancellation fee. The Exchange submits that the term ''Near'' better describes the order as its defining characteristic is that it is near to or better than the NBBO.

[11] Orders that are less than a round-lot size (less than 100 shares in most securities) and cancellations from ''Immediate or Cancel'' or ''Fill or Kill'' orders will not be counted towards the number of cancellations resulting in a fee charged to a Participant. In the event that a Participant has no executed provide orders in a month, we assume that E has a value of one (1) in order to avoid a mathematical error in applying the cancellation fee formula.

order cancellation fee would apply to the Participant for that day's activity in that security. If, however, the value is less than the corresponding Cancellation Ratio, the Participant would not be assessed any fee on its cancellation instructions. Although the Cancellation Ratio and order cancellation fee may vary depending on the type of security, the Exchange proposes to set the Cancellation Ratio at 150 and the order cancellation fee rate at $0.01 per cancelled order, across the board.[12] Moreover, the order cancellation fee will be calculated daily, per security and applied per Account Symbol [13] maintained by each clearing Participant.

In contrast to the original W order, an order may now be considered Wide if any one of the following three conditions are met.[14] First, a W order is an order priced inferior to the National Best Bid (''NBB'') for a buy order and National Best Offer (''NBO'') for a sell order at the time the order is received by the Matching System and where the difference between the order price and the NBB or NBO is equal to or greater than its corresponding ''Threshold Away Amount.'' Second, a W order is an order in a security that is voluntarily cancelled by the Participant prior to the expiration of its corresponding ''Minimum Duration,'' after acceptance by the Matching System, without any partial executions. Finally, a W order is one that is marked ''Do Not Display,'' pursuant to CHX Article 20, Rule 4(b)(9).[15] By classifying such orders as W orders, the Exchange endeavors to incentivize Participants to post displayed bids and offers and thereby promote displayed liquidity on the Exchange. In turn, the Exchange anticipates that increased displayed liquidity would result in a greater number of order executions and, ultimately, increased revenue for the Exchange.

Moreover, the proposed W order introduces two new parameters. First, the ''Threshold Away Amount'' is a security-type specific value that establishes a bright-line value for determining when an order price is either away or near the NBBO. Although the value of this parameter may eventually vary by security-type, the Exchange proposes to set the Threshold Away Amount at $0.03 for all six security types.[16] Second, the ''Minimum Duration'' parameter is also a security-type specific value that establishes a bright-line time limit for determining whether an order is considered Wide or may be considered Near. The purpose of this parameter is to promote order execution by curtailing the submission of orders that are not present and displayable for a reasonable period of time and, consequently, to reduce the incidence of disruptive ''flickering quotes.'' The Exchange submits that the longer an order is displayed the better chance it has of being executed. Although this value may also vary by security type, the Exchange proposes to set the Minimum Duration at 10 milliseconds for all six security types.[17]

In contrast to the original ''Quotable'' or ''Q'' order, the proposed N order is defined as (1) an order in a security priced at $1.00 per share or more submitted by the Participant in the Regular Trading Session, (2) where the difference between the order price and the NBB or NBO is less than its corresponding Threshold Away Amount and (3) where the order is not voluntarily cancelled by the Participant prior to either its corresponding Minimum Duration or prior to a partial execution of the order, whichever is earlier.

Moreover, the proposed N order will be modified by a ''Near order multiplier'' or ''N_{mult},'' which is a security-type specific value, which multiplies the value of N. The practical effect of the N_{mult} is that it enhances the mitigating effect of N orders on the order cancellation ratio. Therefore, the purpose of the N_{mult} is to give the Exchange the ability to enhance or reduce the impact of N on the order cancellation ratio, so as to ensure, *inter alia,* equitable application of the order cancellation fee. This also provides a strong incentive for Participants to provide more Near orders and fewer Wide orders by giving each Near order two times the weight of a Wide order in calculating the calculation ratio. Although this number may eventually vary by security type, like the Cancellation Ratio, order cancellation fee rate, Threshold Away Amount and Minimum Duration, the Exchange proposes to set the ''N_{mult}''at two (2) for all six security types.[18] Generally speaking, all of these new parameters will allow the Exchange to better adapt to future issues with the application of the proposed order cancellation formula by merely adjusting these values.

The following examples illustrate how an order may be classified as either Wide or Near. For all Examples, assume submission of a buy order for 1,000 shares of a Tape A non-derivative security:

For Example A, assume that the price of the order is $0.04 inferior to the NBB and it is voluntarily cancelled by the Participant twelve (12) milliseconds after submission to the Matching System. Since the difference between the order price and NBB (''price difference'') is greater than the Threshold Away Amount for a Tape A non-derivative security ($0.03), this is a Wide order, notwithstanding all other factors.

For Example B, assume that the price of the order is $0.04 inferior to the NBB and it is fully executed after twelve (12) milliseconds. Since the price difference is greater than the corresponding Threshold Away Amount, this is a Wide order, notwithstanding all other factors.

For Example C, assume that the price of the order is $0.04 inferior to the NBB, there is a partial execution of 500 shares after five (5) milliseconds and the remainder of the order is voluntarily cancelled after twelve (12) milliseconds. Since the price difference is greater than the corresponding Threshold Away Amount, it is a Wide order, notwithstanding all other factors.

For Example D, assume that the price of the order is $0.01 inferior to the NBB, there is a partial execution of 500 shares after five (5) milliseconds, the remainder is voluntarily cancelled after twelve (12) milliseconds and the order is marked ''Do Not Display.'' Since the order is marked ''Do Not Display,'' it is a Wide order, notwithstanding all other factors.

For Example E, assume that the order price is equal to the NBB and the order is fully executed after twelve (12) milliseconds. Since the price difference is less than the corresponding Threshold Away Amount and the order was fully executed, this is a Near order.

[12] Changes to any of the proposed parameter values, including Order Cancellation Fee, Cancellation Ratio, Threshold Away Amount, Minimum Duration and N_{mult}, will be made through proposed fee filings pursuant to Rule 19b–4.

[13] Individual Account Symbols are assigned, by the Exchange, to each trading account maintained by a clearing Participant. Each clearing Participant which executes orders on the Exchange has at least one Account Symbol, while some clearing Participants have multiple account symbols. Multiple accounts can be used by clearing Participants, for example, to segregate the order activity of different clients. Calculating and applying the cancellation fee by the Account Symbols maintained by the clearing Participant provides a more precise way of identifying the conduct and correspondent firms implicated by the proposed fee provisions.

[14] As a general matter, all W orders are securities priced at $1.00 share or more when submitted by the Participant in the Regular Trading Session.

[15] Article 20, Rule 4(b)(9) defines a ''Do Not Display'' order as an order for at least 1,000 shares when entered that is not to be displayed in whole or in part.

[16] *Supra* note 12.

[17] *Id.*

[18] *Id.*

For Example F, assume that the order price is equal to the NBB, there is a partial execution of 500 shares after five (5) milliseconds and the balance of the order is voluntarily cancelled after eight (8) milliseconds. Since the price difference is less than the corresponding Threshold Away Amount and the order was cancelled only after a partial execution of 500 shares, this is a Near order, notwithstanding the order having been voluntarily cancelled prior to the expiration of the corresponding Minimum Duration.

For Example G, assume that the order price is $0.01 inferior to the NBB and it is voluntarily cancelled after 20 milliseconds without any executions. Since the price difference is less than the corresponding Threshold Away Amount and the order was only cancelled after the expiration of the corresponding Minimum Duration, it is a Near order.

Moreover, the operation of the proposed order cancellation fee formula can be illustrated by the use of some more examples. For Example 1, assume that on a given day, a Participant firm submits to the Matching System 200,000 buy orders for a Tape A non-derivative security. Of this amount, 180,000 orders are priced $0.04 inferior to the NBB and are voluntarily cancelled after twelve (12) milliseconds, thus making these orders Wide. The remaining 20,000 orders are priced $0.02 inferior to the NBB and are voluntarily cancelled after twelve (12) milliseconds, thus making these orders Near. Out of 200,000 submitted orders, 1,000 orders are executed in whole or in part.[19] Pursuant to the proposed formula, the difference between W (180,000) and the product of N and the corresponding N_{mult} of two (40,000) is 140,000. Dividing that figure by the number of orders which were executed (E or 1,000) results in a cancellation ratio of 140. Since the corresponding Cancellation Ratio of a Tape A non-derivative security is 150, no cancellation fee would be assessed on this day, to this Participant, with respect to this specific security.

Example 1 also illustrates the power of the N_{mult}. Under Example 1, the N_{mult} doubled the N value to the point that the ratio was brought below the cancellation ratio threshold. That is, without the N-multiplier, the cancellation ratio would have been 160 and the Participant would have been assessed the cancellation fee. The utility of the N_{mult} and other parameters lies in its ability to give the Exchange flexibility to make adjustments when necessary, through proposed fee filings pursuant to Rule 19b–4, so as to avoid unintended or inequitable application of the cancellation fee, without having to completely revamp the formula, as well as to promote the submission of Near orders.

For Example 2, we assume the same facts as above, with the exception that the Participant firm submits a total of 400,000 buy orders for a Tape A non-derivative security on a given day and that 380,000 of those orders are Wide orders. Also assume that 200,000 such W and N orders are cancelled. Pursuant to the proposed formula, the difference between W (380,000) and the product of N and the corresponding N multiplier of two (40,000) is 340,000. Dividing that figure by the number of orders which were executed (E or 1,000) gives us an order cancellation ratio of 340. Since the corresponding order cancellation ratio of a Tape A non-derivative security is 150, a cancellation fee of $2,000, which is the product of 200,000 cancellations and $0.01 per order cancelled, would be assessed on this day, to this Participant, with respect to this specific security.

The purpose of this order cancellation fee is to incent Participants to submit orders which, when quoted, are at or close to the NBBO or, at the very least, compensate the Exchange for the processing and electronic storage costs associated with orders which rarely execute. Under the proposed formula, the likelihood that the cancellation fee would be imposed increases with the number of Wide orders submitted by the Participant. The formula is designed to isolate a pattern of behavior in which a Participant submits orders well outside the NBBO and frequently cancels and reenters such orders to continuously stay outside the NBBO.[20] Participants that submit a small number of Wide orders or submit a relatively large number of Near orders are unlikely to be impacted by the proposed fee. Moreover, the Minimum Duration parameter will prevent Participants from gaming the formula by submitting orders which result in undesirable ''flickering quotes'' and the N_{mult} will allow the Exchange to multiply the mitigating effect of Near orders on the order cancellation ratio when necessary. In addition, the likelihood that the cancellation fee will be assessed diminishes as the number of orders actually executed (E) increases. As such, the proposed order cancellation fee will have the dual effect of promoting order execution and compensating the Exchange for the processing and electronic storage costs associated with orders which ''quote around'' the NBBO and rarely execute.

The Exchange believes that the proposed order cancellation fee benefits the national market system by promoting the display of Near orders, which will result in increased displayed liquidity and reduced order cancellations. This will, in turn, relieve the Exchange's systems capacity and will result in decreased order and market data storage costs. Since Wide orders are infrequently executed, such orders are more expensive, on a relative basis, for the Exchange to receive and process.

The Exchange proposes to implement the cancellation charge effective November 2, 2012. The formula by which the cancellation fee is derived shall be calculated and made available to Participants daily, but billed after the end of the month.

2. Statutory Basis

The Exchange believes that the proposed rule change is consistent with Section 6(b) of the Act[21] in general, and furthers the objectives of Section 6(b)(4) of the Act[22] in particular, in that it provides for the equitable allocation of reasonable dues, fees and other charges among members and other persons using any facility or system which the Exchange operates or controls. The Exchange believes that amendments to the order cancellation fee described herein should help to recoup some of the costs of administering and processing large numbers of cancelled orders while fairly allocating costs among Participants according to system use. In addition, these changes to the Fee Schedule would equitably allocate reasonable fees among Participants in a non-discriminatory manner by properly imposing fees on those Participants which excessively enter and subsequently cancel orders while not imposing fees on Participants that do not engage in this resource draining behavior. Furthermore, the proposed order cancellation fee of $0.01/order cancellation is reasonable in light of the fact that it is less than the current order

[19] Since orders may be partially executed, the Participants may receive more trade executions than orders. The Exchange believes that the formula should be based upon the number of orders executed and not the number of trades reported.

[20] Although the Exchange is not privy to the trading strategies of the firms submitting large numbers of orders well outside the NBBO, it appears that they are hoping to benefit from Intermarket Sweep Order (''ISO'') satisfaction orders sent to the Exchange pursuant to the requirements of Regulation NMS when a trade through occurs on another trading center and the Wide orders are at the CHX BBO. Since the sending of ISO satisfaction orders is not required for non-Regular Trading Session activity, we are excluding such activity from the proposed fee.

[21] 15 U.S.C. 78f.

[22] 15 U.S.C. 78f(b)(4).

cancellation fee of $0.30/order cancellation.

B. Self-Regulatory Organization's Statement on Burden on Competition

The Exchange does not believe that the proposed rule change will impose any burden on competition that is not necessary or appropriate in furtherance of the purposes of the Act.

C. Self-Regulatory Organization's Statement on Comments on the Proposed Rule Change Received From Members, Participants, or Others

No written comments were solicited or received.

III. Date of Effectiveness of the Proposed Rule Change and Timing for Commission Action

The proposed rule change is to take effect pursuant to Section 19(b)(3)(A)(ii) of the Act [23] and subparagraph (f)(2) of Rule 19b-4 thereunder [24] because it establishes or changes a due, fee or other charge applicable to the Exchange's members and non-members, which renders the proposed rule change effective upon filing.

At any time within 60 days of the filing of the proposed rule change, the Commission summarily may temporarily suspend such rule change if it appears to the Commission that such action is necessary or appropriate in the public interest, for the protection of investors, or otherwise in furtherance of the purposes of the Act.

IV. Solicitation of Comments

Interested persons are invited to submit written data, views, and arguments concerning the foregoing, including whether the proposed rule change is consistent with the Act. Comments may be submitted by any of the following methods:

Electronic Comments

- Use the Commission's Internet comment form (*http://www.sec.gov/rules/sro.shtml*); or
- Send an email to *rule-comments@sec.gov.* Please include File Number SR–CHX–2012–15 on the subject line.

Paper Comments

- Send paper comments in triplicate to Elizabeth M. Murphy, Secretary, Securities and Exchange Commission, 100 F Street NE., Washington, DC 20549–1090.

All submissions should refer to File Number SR–CHX–2012–15. This file number should be included on the subject line if email is used.

To help the Commission process and review your comments more efficiently, please use only one method. The Commission will post all comments on the Commission's Internet Web site (*http://www.sec.gov/rules/sro.shtml*). Copies of the submission, all subsequent amendments, all written statements with respect to the proposed rule change that are filed with the Commission, and all written communications relating to the proposed rule change between the Commission and any person, other than those that may be withheld from the public in accordance with the provisions of 5 U.S.C. 552, will be available for Web site viewing and printing in the Commission's Public Reference Room on official business days between the hours of 10:00 a.m. and 3:00 p.m. Copies of such filing also will be available for inspection and copying at the principal offices of CHX. All comments received will be posted without change; the Commission does not edit personal identifying information from submissions. You should submit only information that you wish to make available publicly. All submissions should refer to File Number SR–CHX–2012–15, and should be submitted on or before December 11, 2012.

For the Commission, by the Division of Trading and Markets, pursuant to delegated authority.[25]

Kevin M. O'Neill,

Deputy Secretary.

[FR Doc. 2012–28135 Filed 11–19–12; 8:45 am]

BILLING CODE 8011–01–P

[23] 15 U.S.C. 78s(b)(3)(A)(ii).

[24] 17 CFR 240.19b–4(f)(2).

[25] 17 CFR 200.30–3(a)(12).

SECURITIES AND EXCHANGE COMMISSION

[Release No. 34–68233; File No. SR–NYSEArca–2012–103]

Self-Regulatory Organizations; NYSE Arca, Inc.; Order Granting Approval of Proposed Rule Changes Amending NYSE Arca, Inc. Rules 3.2 and 3.3 and NYSE Arca Equities, Inc. Rules 3.2 and 3.3 To Expand the Eligibility Requirements for Service on Certain Boards of Directors and Committees

November 14, 2012.

I. Introduction

On September 18, 2012, NYSE Arca, Inc. (''NYSE Arca'') filed with the Securities and Exchange Commission (''Commission''), pursuant to Section 19(b)(1) [1] of the Securities Exchange Act of 1934 (''Act''),[2] and Rule 19b–4 thereunder,[3] proposed rule changes to amend NYSE Arca Rules 3.2 and 3.3 and NYSE Arca Equities, Inc. (''NYSE Arca Equities'') Rules 3.2 and 3.3 to expand the eligibility requirements for service on the Board of Directors of NYSE Arca (''NYSE Arca Board'') and certain committees of NYSE Arca and NYSE Arca Equities. The proposed rule changes were published for comment in the **Federal Register** on October 1, 2012.[4] The Commission received no comment letters on the proposal.

II. Background

Amendments to NYSE Arca Rules 3.2 and 3.3

NYSE Arca Rule 3.2(a) sets forth the general provisions for Options Committees. Specifically, NYSE Arca Rule 3.2(a)(8) states that any OTP Holder [5] of the Exchange in good standing, Allied Person [6] of an OTP Firm,[7] or person from the public is eligible for appointment or election to various Options Committees. NYSE Arca Rule 3.2(b) sets forth the eligibility requirements for three specific Options Committees: The Ethics and Business Conduct Committee (the ''EBCC Committee''), the Nominating Committee, and the OTP Advisory Committee.[8] NYSE Arca Rule 3.3(a) sets forth the eligibility requirements for the Board Appeals Committee and Appeals

[1] 15 U.S.C. 78s(b)(1).

[2] 15 U.S.C. 78a.

[3] 17 CFR 240.19b–4.

[4] *See* Securities Exchange Act Release No. 67923 (September 25, 2012), 77 FR 59995 (SR–NYSEArca–2012–103) (the ''Notice'').

[5] An ''OTP Holder'' is a natural person, in good standing, who has been issued an Options Trading Permit (''OTP''), or has been named as a nominee. *See* NYSE Arca Rule 1.1(q).

[6] An ''Allied Person'' (for purposes of NYSE Arca Rules) is an individual who is (1) an employee of an OTP Firm who controls such firm, (2) an employee of an OTP Firm corporation who is a director or a principal executive officer of such corporation, (3) an employee of an OTP Firm limited liability company who is a manager or a principal executive officer of such limited liability company, or (4) a general partner in an OTP Firm partnership. Each of these persons must be approved by the Exchange as an Allied Person. *See* NYSE Arca Rule 1.1(b).

[7] ''OTP Firm'' means a sole proprietorship, partnership, corporation, limited liability company, or other organization in good standing who holds an OTP or upon whom an individual OTP Holder has conferred trading privileges on the Exchange's trading facilities. *See* NYSE Arca Rule 1.1(r).

[8] The EBCC currently consists primarily of OTP Holders and Allied Persons of an OTP Firm. *See* NYSE Arca Rule 3.2(b)(1)(A). The Nominating Committee currently consists of six OTP Holders. *See* NYSE Arca Rule 3.2(b)(2)(A). The OTP Advisory Committee currently consists of OTP Holders. *See* NYSE Arca Rule 3.2(b)(3)(A).

Panel.[9] The Exchange proposes to amend its rules to expand the eligibility requirements to serve on these various committees and panels to include OTP Holders, Allied Persons of OTP Firms and Associated Persons [10] of OTP Firms.

The Exchange also proposes to expand the eligibility for its fair representation directors.[11] Currently, the Nominating Committee publishes the name of one OTP Holder or Allied Person of an OTP Firm as its nominee for the NYSE Arca Board.[12] The Exchange proposes to expand the eligibility for fair representation directors by amending this rule to allow the Nominating Committee to publish the name of an Associated Person of an OTP Firm as well.

Amendments to NYSE Arca Equities Rules

The Exchange proposes to make parallel changes to the NYSE Arca Equities Rules. NYSE Arca Equities Rule 3.2(a) sets forth general provisions for various Equities Committees. Specifically, NYSE Arca Equities Rule 3.2(a)(8) states that any ETP Holder [13] of the Exchange in good standing or Allied Person [14] of an ETP Holder,[15] or person from the public is eligible for appointment or election to Equities Committees. NYSE Arca Equities Rule 3.2(b) sets forth provisions for two specific Equities Committees: The Business Conduct Committee (the ''BCC Committee'') and the Nominating Committee (the ''Equities Nominating Committee'').[16] NYSE Arca Rule 3.3(a) sets forth the eligibility requirements for the Board Appeals Committee.[17] The Exchange proposes to amend the rules of NYSE Arca Equities so to expand the eligibility requirements to serve on these various committees and panels to include ETP Holders, Allied Persons of ETP Firms and Associated Persons [18] of ETP Firms.

In addition to amending the composition requirements of the Equities Nominating Committee, the Exchange also proposes to amend NYSE Arca Rules 3.2(b)(2)(C)(i) to expand the eligibility for fair representation directors. Currently, the Equities Nominating Committee may nominate ETP Holders or Allied Persons of ETP Holders to serve on the NYSE Arca Board. The Exchange proposes to expand the eligibility for fair representation directors by amending this rule to allow the Equities Nominating Committee to publish the name of an Associated Person of an ETP Firm as well.

III. Discussion and Commission Findings

The Commission has reviewed carefully the proposed rule changes and finds that the proposed rule changes are consistent with the requirements of the Act and the rules and regulations thereunder applicable to a national securities exchange.[19] In particular, the Commission finds that the proposed rule changes are consistent with Section 6(b)(3) of the Act,[20] which, among other things, requires that the rules of an exchange assure a fair representation of its members in the selection of its directors and administration of its affairs and provides that one or more directors shall be representative of issuers and investors and not be associated with a member of the exchange, broker or dealer. As the Exchange notes, the proposed rule changes are consistent with the composition requirements set forth in the governing documents of other self-regulatory organizations.[21] The Exchange is not proposing to alter the number of fair representation candidates on the boards or any other aspect of the NYSE Arca Board's composition or nomination process.

The proposed rule change also furthers the objectives of Section 6(b)(6) of the Act,[22] because it provides for appropriate discipline for violations of Exchange rules and regulations. The Commission believes that the proposed rule change will expand the available candidates with industry knowledge that are eligible for membership on the Options and Equities Committees that are involved in reviewing disciplinary actions against OTP Holders, OTP Firms, and ETP Holders and advising on rule changes related to disciplinary matters and trading rules.

The Commission also believes that the proposed rule change furthers the objectives of Section 6(b)(5) of the Act [23] in that it is designed to prevent fraudulent and manipulative acts and practices, to promote just and equitable principles of trade, to foster cooperation and coordination with persons engaged in regulating, clearing, settling, processing information with respect to, and facilitating transactions in securities, to remove impediments to and perfect the mechanism of a free and open market and a national market system, and, in general, to protect investors and the public interest. Specifically, the Commission believes the proposed rule change would expand the pool of candidates eligible for membership on the NYSE Arca Board and committees of NYSE Arca and NYSE Arca Equities and thereby increase the breadth of industry knowledge that would be available to these entities, which should benefit the public interest.

[9] Each Appeals Panel is made up of no less than three (3) but no more than five (5) individuals, at least one of whom is a director that is an OTP Holder or Allied Person of an OTP Firm. *See* NYSE Arca Rule 3.3(a)(1)(B).

[10] ''Associated Person'' is person who is a partner, officer, director, member of a limited liability company, trustee of a business trust, employee of an OTP Firm, or any person directly or indirectly controlling, controlled by or under common control with an OTP Firm. *See* NYSE Arca Rule 1.1(d).

[11] Under Section 3.02(a) of the Bylaws of NYSE Arca, the NYSE Arca Board must have 8–12 directors, and at least 20 percent of the directors must be individuals nominated by trading permit holders, with at least one director nominated by the Equities Trading Permit Holders (''ETP Holders'') of NYSE Arca Equities, and at least one director nominated by the OTP Holders of the Exchange. In addition, at least 50 percent of the directors must be directors who represent the public. The exact number of the directors nominated by the ETP Holders and OTP Holders is determined from time to time by the NYSE Arca Board, subject to the percentage restrictions described above.

[12] *See* NYSE Arca Rule 3.2(b)(2)(C)(ii).

[13] An ''ETP Holder'' is a sole proprietorship, partnership, corporation, limited liability company or other organization in good standing that has been issued an Equities Trading Permit. *See* NYSE Arca Equities Rule 1.1(n).

[14] An ''Allied Person'' (for purposes of NYSE Arca Equities Rules) is an individual who is (1) an employee of an ETP Holder who controls such firm, (2) an employee of an ETP Holder corporation who is a director or a principal executive officer of such corporation, (3) an employee of an ETP Holder limited liability company who is a manager or a principal executive officer of such limited liability company, or (4) a general partner in an ETP Holder partnership; each of these persons must be approved by NYSE Arca Equities as an Allied Person. *See* NYSE Arca Equities Rule 1.1(c).

[15] ETP Firm means a sole proprietorship, partnership, corporation, limited liability company, or other organization in good standing who holds an OTP or upon whom an individual OTP Holder has conferred trading privileges on the Exchange's trading facilities. *See* NYSE Arca Rule 1.1(r).

[16] The BCC currently consists of a minimum of one ETP Holder or Allied Persons of an ETP Holder. *See* NYSE Arca Equities Rule 3.2(b)(1)(A). The Nominating Committee currently consists of six ETP Holders. *See* NYSE Arca Equities Rule 3.2(b)(2)(A).

[17] Each Appeals Committee currently consists of at least one public director and at least one director that is an ETP Holder or Allied Person of an ETP Firm. *See* NYSE Arca Equities Rule 3.3(a)(1)(A).

[18] ''Associated Person'' is person who is a partner, officer, director, member of a limited liability company, trustee of a business trust, employee of an ETP Holder, or any person directly or indirectly controlling, controlled by or under common control with an ETP Holder. *See* NYSE Arca Equities Rule 1.1(f).

[19] In approving the proposed rule changes, the Commission has considered their impact on efficiency, competition, and capital formation. *See* 15 U.S.C. 78c(f).

[20] 15 U.S.C. 78f(b)(3).

[21] *See* Notice, *supra* note 3 at 59995–59997.

[22] 15 U.S.C. 78f(b)(6).

[23] 15 U.S.C. 78f(b)(5).

IV. Conclusion

For the foregoing reasons, the Commission finds that the proposed rule changes are consistent with the Act and the rules and regulations thereunder applicable to a national securities exchange.

It is therefore ordered, pursuant to Section 19(b)(2) of the Act [24] that the proposed rule changes (SR–NYSEArca–2012–103), are approved.

For the Commission, by the Division of Trading and Markets, pursuant to delegated authority.[25]

Kevin M. O'Neill,

Deputy Secretary.

[FR Doc. 2012–28192 Filed 11–19–12; 8:45 am]

BILLING CODE 8011–01–P

SECURITIES AND EXCHANGE COMMISSION

[Release No. 34–68227; File No. SR–NYSEArca–2012–123]

Self-Regulatory Organizations; NYSE Arca, Inc.; Notice of Filing and Immediate Effectiveness of Proposed Rule Change To Change the Monthly Fees for the Use of Ports

November 14, 2012.

Pursuant to Section 19(b)(1) [1] of the Securities Exchange Act of 1934 (the ''Act'') [2] and Rule 19b–4 thereunder,[3] notice is hereby given that, on November 1, 2012, NYSE Arca, Inc. (the ''Exchange'' or ''NYSE Arca'') filed with the Securities and Exchange Commission (the ''Commission'') the proposed rule change as described in Items I, II and III below, which Items have been prepared by the self-regulatory organization. The Commission is publishing this notice to solicit comments on the proposed rule change from interested persons.

I. Self-Regulatory Organization's Statement of the Terms of Substance of the Proposed Rule Change

The Exchange proposes to amend the NYSE Arca Equities Schedule of Fees and Charges for Exchange Services (the ''Fee Schedule'') to change the monthly fees for the use of ports. The text of the proposed rule change is available on the Exchange's Web site at *www.nyse.com,* at the principal office of the Exchange, and at the Commission's Public Reference Room.

[24] 15 U.S.C. 78s(b)(2).

[25] 17 CFR 200.30–3(a)(12).

[1] 15 U.S.C.78s(b)(1).

[2] 15 U.S.C. 78a.

[3] 17 CFR 240.19b–4.

II. Self-Regulatory Organization's Statement of the Purpose of, and Statutory Basis for, the Proposed Rule Change

In its filing with the Commission, the self-regulatory organization included statements concerning the purpose of, and basis for, the proposed rule change and discussed any comments it received on the proposed rule change. The text of those statements may be examined at the places specified in Item IV below. The Exchange has prepared summaries, set forth in sections A, B, and C below, of the most significant parts of such statements.

A. Self-Regulatory Organization's Statement of the Purpose of, and the Statutory Basis for, the Proposed Rule Change

1. Purpose

The Exchange proposes to amend the Fee Schedule to change the monthly fees for the use of ports that provide connectivity to the Exchange's trading systems (i.e., ports for entry of orders and/or quotes (''order/quote entry ports'')) and to implement a fee for ports that allow for the receipt of ''drop copies'' of order or transaction information (''drop copy ports'' and, together with order/quote entry ports, ''ports'').[4] The Exchange proposes to implement the fee changes on November 1, 2012.

Order/Quote Entry Ports

The Exchange currently makes order/quote entry ports available for connectivity to its trading systems and charges $300 per port pair per month for up to five pairs of ports, then $1,500 per month for each additional five pairs of ports.[5]

The Exchange proposes to change the current methodology for order/quote entry port billing, such that order/quote entry ports would be charged on a per port basis, without billing in groups of five and without requiring that ports be in pairs.[6] More specifically, the Exchange proposes to charge $200 per port per month for order/quote entry ports, which are currently charged $300 per pair per month for activity on NYSE Arca Equities; [7] provided, however, that (i) users of the Exchange's Risk Management Gateway service (''RMG'') would not be charged for order/quote entry ports if such ports are designated as being used for RMG purposes, and (ii) unutilized order/quote entry ports that connect to the Exchange via its backup datacenter would be considered established for backup purposes and not charged port fees.[8]

The Exchange proposes that users of RMG would not be charged for order/quote entry ports if such ports are designated as being used for RMG purposes. RMG enables Sponsoring ETP Holders to verify whether a Sponsored Participant's orders comply with order criteria established by the Sponsoring ETP Holder for the Sponsored Participant, including, among other things, criteria related to order size (per order or daily quantity limits), credit limits (per order or daily value), specific symbols or end users.[9] Currently, users of RMG are required to pay the existing order/quote entry port fees for connectivity to the Exchange's trading systems, in addition to the RMG

[4] Firms receive confirmations of their orders and receive execution reports via the order/quote entry port that is used to enter the order or quote. A ''drop copy'' contains redundant information that a firm chooses to have ''dropped'' to another destination (e.g., to allow the firm's back office and/or compliance department, or another firm—typically the firm's clearing broker—to have immediate access to the information). Such drop copies can only be sent via a drop copy port. Drop copy ports cannot be used to enter orders and/or quotes.

[5] *See* Securities Exchange Act Release No. 63056 (October 6, 2010), 75 FR 63233 (October 14, 2010) (SR–NYSEArca–2010–87) (the port fee ''Adopting Release''). *See also* Securities Exchange Act Release No. 66110 (January 5, 2012), 77 FR 1766 (January 11, 2012) (SR–NYSEArca–2012–01) (the port fee ''Amending Release''). For example, the current fee for six pairs of ports would be $3,000 total per month (i.e., $1,500 total for the first five pairs and $1,500 for the sixth pair). The fee would remain $3,000 for pairs seven through 10. The fee would increase by $1,500, to $4,500 total, for pairs 11 through 15.

[6] The Exchange stated in the Adopting Release that the port fee is charged per participant. The Exchange later clarified that ''per participant'' means per ETP ID for purposes of the port fees, since an ETP Holder may have more than one unique ETP ID. *See* Amending Release, at 1766–1767. The proposed fee change would change the current methodology such that ports would not be charged on a per ETP ID basis. Accordingly, reference to per ETP ID would be removed from the Fee Schedule related to port fees.

[7] The Exchange does not currently charge for order/quote entry ports related to option activity on NYSE Arca Options. However, via a separate proposed rule change, the Exchange is proposing to implement port fees applicable to option activity on NYSE Arca Options. *See* SR–NYSEArca–2012–122. In this regard, separate port fees would be charged for an order/quote entry port that is authorized for both equity and option order/quote entry.

[8] Since the Adopting Release, the Exchange has not charged for order/quote entry ports that connect to the Exchange through its backup datacenter, which is currently located in Chicago, Illinois, irrespective of whether activity was conducted through such ports.

[9] *See* Securities Exchange Act Release No. 60607 (September 1, 2009), 74 FR 46275 (September 8, 2009) (SR–NYSEArca–2009–80) (order approving RMG). *See also* Securities Exchange Act Release No. 60664 (September 14, 2009), 74 FR 48110 (September 21, 2009) (SR–NYSEArca–2009–81) (establishing RMG fees). The Exchange proposes a non-substantive change to the Fee Schedule to move the first instance of Risk Management Gateway being defined as ''RMG.''

connection fees related to such ports.[10] The Exchange proposes that users of RMG would no longer be required to pay port fees for order/quote entry ports designated as being used for RMG because, in the Exchange's opinion, order/quote entry ports are an integral part of RMG and such users are already charged a fee for RMG, including additional connections related thereto, which the Exchange believes is sufficient to cover its costs related to making the order/quote entry ports available for RMG purposes. Accordingly, the Exchange proposes to specify that port fees are not applicable to order/quote entry ports designated as being used for RMG.

Drop Copy Ports

The Exchange proposes to implement a fee for drop copy ports,[11] for which the Exchange does not currently charge a fee, provided, however, that users of RMG would not be charged for drop copy ports if such ports are designated as being used for RMG purposes. The Exchange proposes to charge $500 per port per month for drop copy ports.[12] Additionally, the Exchange proposes to specify that only one fee per drop copy port would apply, even if the port receives drop copies from multiple order/quote entry ports and/or drop copies for activity on both NYSE Arca Equities and NYSE Arca Options.

In addition, the Exchange proposes that users of RMG would not be charged for drop copy ports if such ports are designated as being used for RMG purposes. The Exchange proposes that users of RMG not be required to pay port fees for drop copy ports designated as being used for RMG because, in the Exchange's opinion, ports are an integral part of RMG and such users are already charged a fee for RMG, including additional connections related thereto, which the Exchange believes is sufficient to cover its costs related to making the ports available for RMG purposes. Accordingly, the Exchange proposes to specify that port fees are not applicable to drop copy ports designated as being used for RMG.

Backup Datacenter

Finally, the Exchange proposes that unutilized order/quote entry ports that connect to the Exchange via its backup datacenter and are not utilized be considered established for backup purposes and not charged port fees.[13] However, if activity were conducted through one of these order/quote entry ports, whether for backup or any other purposes, port fees would apply for the relevant month or months. In this regard, the Exchange notes that it monitors usage of these particular ports. Accordingly, if an order/quote were sent to the Exchange via one of these ports, then the port would be charged the applicable monthly port fee.

The Exchange also proposes that drop copy ports that connect to the Exchange via its backup datacenter not be charged if the drop copy port is configured such that it is duplicative of another drop copy port of the same user, regardless of whether the drop copy port is utilized or not. The Exchange is proposing to treat drop copy ports in this manner because a firm would not derive any value or utility from a drop copy port in the datacenter that is duplicative of another drop copy port that it already has outside of the datacenter, in that, because drop copy ports are used to send duplicative information, a second drop copy port carrying the same information would not be a useful resource, except for a backup purpose.

Overall, the Exchange believes that the changes proposed herein will result in the method of billing for ports more closely aligning with the needs of firms with ports. The proposed changes will also permit the Exchange to remain competitive with other exchanges with respect to fees charged for ports.[14] The Exchange notes that the proposed changes are not otherwise intended to address any other issues surrounding ports or port fees and that the Exchange is not aware of any problems that port users would have in complying with the proposed change.

The Exchange proposes to implement these changes on November 1, 2012. In this regard, the Exchange notes that billing for ports would be based, as is currently on the case, on the number of ports on the third business day prior to the end of the month. In addition, the level of activity with respect to a particular port would still not affect the assessment of monthly fees, such that, except for ports that are not charged and ports considered established for backup purposes, even if a particular port is not used, a port fee would still apply.

2. Statutory Basis

The Exchange believes that the proposed rule change is consistent with Section 6(b) of the Securities Exchange Act of 1934 (the ''Act''),[15] in general, and furthers the objectives of Section 6(b)(4) of the Act,[16] in particular, because it provides for the equitable allocation of reasonable dues, fees, and other charges among its members, issuers and other persons using its facilities and does not unfairly discriminate between customers, issuers, brokers or dealers.

Overall, the Exchange believes that the proposed changes, including the rates proposed, are reasonable because the fees charged for order/quote entry ports and drop copy ports are expected to permit the exchange to offset, in part, its connectivity costs associated with making such ports available, including costs based on gateway software and hardware enhancements and resources dedicated to gateway development, quality assurance, and support. In this regard, the Exchange believes that its fees are competitive with those charged by other venues, and that in some cases its port fees are less expensive than many of its primary competitors.[17] The Exchange believes that the changes proposed herein will result in the method of billing for ports more closely aligning with the needs of firms with ports.

The Exchange believes that the proposed change to the methodology for billing for order/quote entry ports is reasonable because it will simplify the fees for ports by eliminating the pair requirement and allowing a firm that requires more than five pairs of ports to request, and pay for, the specific number of ports that it requires, rather than requesting ports in pairs and in groups of five. This aspect of the proposed change is also equitable and not unfairly discriminatory because it will result in charges for order/entry ports being based on the number of ports utilized. This aspect of the proposed change is also equitable and not unfairly discriminatory because it will apply on an equal basis for all ports on the Exchange, except for order/quote entry ports related to RMG and order/quote entry ports in the backup datacenter that are not utilized.[18]

[10] Currently, a $3,000 charge per month applies for an initial RMG connection and a $1,000 charge for every additional connection thereafter.

[11] *See supra* note 4.

[12] The Exchange proposes to add language to the Fee Schedule to differentiate between drop copy ports and order/quote entry ports.

[13] *See supra* note 8.

[14] For example, the charge for connectivity to the NASDAQ Stock Market LLC (''NASDAQ'') NY-Metro and Mid-Atlantic Datacenters is $500 and a separate charge for Pre-Trade Risk Management ports is applicable, which ranges from $400 to $600 and is capped at $25,000 per firm per month. Also, the BATS Exchange, Inc. (''BZX'') charges $400 per month per pair (primary and secondary data center) for logical ports. Additionally, EDGA Exchange, Inc. (''EDGA'') and EDGX Exchange, Inc. (''EDGX'') each charge $500 per port. EDGA and EDGX also provide the first five ports for free.

[15] 15 U.S.C. 78f(b).

[16] 15 U.S.C. 78f(b)(4).

[17] *See supra* note 14.

[18] The Exchange describes below how the proposed changes regarding RMG and the backup datacenter are consistent with the Act.

The Exchange believes that it is reasonable to charge $200 per port per month for order/quote entry ports because, when combined with the change to the methodology for billing for ports, it could result in a decrease in the overall cost to users of ports. The proposed rate is also reasonable because it is comparable to the rates of other exchanges.[19] The Exchange also believes that these changes to the fees are equitable and not unfairly discriminatory because they would apply to all users of order/quote entry ports on the Exchange, subject to the exceptions noted above.

The Exchange believes that the proposed new fee for drop copy ports is reasonable because it will result in a fee being charged for the use of technology and infrastructure provided by the Exchange. In this regard, the Exchange believes that the rate is reasonable because it is comparable to the rate charged by other exchanges for drop copy ports.[20] Furthermore, the Exchange believes that the proposed rate for a drop copy port is reasonable because, when compared to the proposed rate for order/quote entry ports, it reflects the level of resources required of the Exchange to establish and maintain the port, including the various sources from which data comes (i.e., establishing connections to order/quote entry ports as well as, in certain circumstances, to order/quote entry ports on both NYSE Arca Equities and NYSE Arca Options). The proposed rate is also reasonable in light of the functional/operational differences between a drop copy port and an order/quote entry port (e.g., that configuration and monitoring of the drop copy port is more substantial and because drop copy ports capture cumulative activity).

The Exchange also believes that it is reasonable that only one fee per drop copy port would apply, even if the port receives drop copies from multiple order/quote entry ports and/or from both NYSE Arca Equities and NYSE Arca Options, because the purpose of drop copies is such that a trading unit's or a firm's entire order and execution activity is captured, including with respect to both equities and options. This is also reflected in the rate of $500 that is proposed for drop copy ports, which is higher than the rate proposed for order/quote entry ports. The Exchange believes that the proposed new fee for drop copy ports is equitable and not unfairly discriminatory because it will apply on an equal basis to all users of drop copy ports and to all drop copy ports on the Exchange, except for those order/entry ports related to RMG and ports in the backup datacenter.[21] In this regard, all firms are able to request drop copy ports, as is the case with order/quote entry ports.

The Exchange believes that not charging for ports that are designated to be used for RMG is reasonable because ports are an integral part of RMG and such users are already charged a fee for RMG, including additional connections related thereto, which the Exchange believes is sufficient to cover its costs related to making the ports available for RMG purposes.[22] In this regard, ports not designated as being used for RMG purposes would remain subject to port fees. The Exchange also believes that this is equitable and not unfairly discriminatory because it would apply equally to all ETP Holders that utilize RMG, which is fully-voluntary and is available to any ETP Holder.

The Exchange believes that it is reasonable to not charge for order/quote entry ports in its backup datacenter that are not utilized. However, the exchange does not restrict firms from using order/quote entry ports from the backup datacenter and, as described above, if one of these ports is utilized for order/quote entry, then port fees would apply. The Exchange believes that this is equitable and not unfairly discriminatory because it would permit firms to have ports established for backup purposes, should they ever be needed, without the burden of paying for such ports when they are not utilized. The Exchange believes this is equitable and not unfairly discriminatory because firms will not be disincentivized from requesting backup ports because of a fee that may otherwise apply. This would contribute to the efficiency of a backup process if primary order/quote entry ports ever became unavailable.

The Exchange also believes that it is reasonable to not charge for drop copy ports in its backup datacenter if configured such that it is duplicative of another drop copy port of the same user, regardless of whether the drop copy port is utilized or not. The Exchange believes that it is reasonable to treat drop copy ports in this manner because a firm would not derive any value/use from a drop copy port in the datacenter that is duplicative of another drop copy port that it already has outside of the datacenter (i.e., because drop copy ports are used to send duplicative information anyways, a second drop copy port carrying the same information would not be a useful resource), except for a backup purpose. The Exchange believes that this is equitable and not unfairly discriminatory because it would permit firms to have ports established for drop copy purposes in the backup datacenter, should they ever be needed, without the burden of paying for such ports. Because the drop copy port would not be providing any information that the firm did not already have, since the port would be configured such that it is duplicative of another drop copy port of the same user, the Exchange believes that it is equitable and not unfairly discriminatory to treat order/quote entry ports and drop copy ports differently in this manner. The Exchange believes this is also equitable and not unfairly discriminatory because firms will not be disincentivized from requesting backup drop copy ports because of a fee that may otherwise apply. This would contribute to the efficiency of a backup process if primary drop copy ports ever became unavailable.

Finally, the Exchange notes that it operates in a highly competitive market in which market participants can readily favor competing venues. In such an environment, the Exchange must continually review, and consider adjusting, its fees and credits to remain competitive with other exchanges. For the reasons described above, the Exchange believes that the proposed rule change reflects this competitive environment.

B. Self-Regulatory Organization's Statement on Burden on Competition

The Exchange does not believe that the proposed rule change will impose any burden on competition that is not necessary or appropriate in furtherance of the purposes of the Act.

C. Self-Regulatory Organization's Statement on Comments on the Proposed Rule Change Received From Members, Participants, or Others

No written comments were solicited or received with respect to the proposed rule change.

III. Date of Effectiveness of the Proposed Rule Change and Timing for Commission Action

The foregoing rule change is effective upon filing pursuant to Section 19(b)(3)(A)[23] of the Act and subparagraph (f)(2) of Rule 19b–4[24] thereunder, because it establishes a due, fee, or other charge imposed by the NYSE Arca.

[19] *See supra* note 14.

[20] *See supra* note 14.

[21] *See supra* note 18.

[22] *See supra* note 9.

[23] 15 U.S.C. 78s(b)(3)(A).

[24] 17 CFR 240.19b–4(f)(2).

IV. Solicitation of Comments

Interested persons are invited to submit written data, views, and arguments concerning the foregoing, including whether the proposed rule change is consistent with the Act. Comments may be submitted by any of the following methods:

Electronic Comments

- Use the Commission's Internet comment form (*http://www.sec.gov/rules/sro.shtml*); or
- Send an email to *rule-comments@sec.gov*. Please include File Number SR–NYSEArca–2012–123 on the subject line.

Paper Comments

- Send paper comments in triplicate to Elizabeth M. Murphy, Secretary, Securities and Exchange Commission, 100 F Street NE., Washington, DC 20549–1090.

All submissions should refer to File Number SR–NYSEArca–2012–123. This file number should be included on the subject line if email is used. To help the Commission process and review your comments more efficiently, please use only one method. The Commission will post all comments on the Commission's Internet Web site (*http://www.sec.gov/rules/sro.shtml*). Copies of the submission, all subsequent amendments, all written statements with respect to the proposed rule change that are filed with the Commission, and all written communications relating to the proposed rule change between the Commission and any person, other than those that may be withheld from the public in accordance with the provisions of 5 U.S.C. 552, will be available for Web site viewing and printing in the Commission's Public Reference Room, 100 F Street NE., Washington, DC 20549, on official business days between the hours of 10:00 a.m. and 3:00 p.m. Copies of the filing also will be available for inspection and copying at the principal office of the Exchange. All comments received will be posted without change; the Commission does not edit personal identifying information from submissions. You should submit only information that you wish to make available publicly. All submissions should refer to File Number SR–NYSEArca–2012–123 and should be submitted on or before December 11, 2012.

For the Commission, by the Division of Trading and Markets, pursuant to delegated authority.[25]

Kevin M. O'Neill,

Deputy Secretary.

[FR Doc. 2012–28144 Filed 11–19–12; 8:45 am]

BILLING CODE 8011–01–P

SECURITIES AND EXCHANGE COMMISSION

[Release No. 34–68231; File No. SR–NYSEMKT–2012–60]

Self-Regulatory Organizations; NYSE MKT LLC; Notice of Filing and Immediate Effectiveness of a Proposed Rule Change To Amend the Amex Options Fee Schedule To Introduce Fees for the Use of Ports

November 14, 2012.

Pursuant to Section 19(b)(1)[1] of the Securities Exchange Act of 1934 (the ''Act''),[2] and Rule 19b–4 thereunder,[3] notice is hereby given that on November 1, 2012, NYSE MKT LLC (the ''Exchange'' or ''NYSE MKT'') filed with the Securities and Exchange Commission (the ''Commission'') the proposed rule change as described in Items I, II, and III below, which Items have been prepared by the self-regulatory organization. The Commission is publishing this notice to solicit comments on the proposed rule change from interested persons.

I. Self-Regulatory Organization's Statement of the Terms of Substance of the Proposed Rule Change

The Exchange proposes to amend the NYSE Amex Options Fee Schedule (the ''Fee Schedule'') to introduce fees for the use of ports. The text of the proposed rule change is available on the Exchange's Web site at *www.nyse.com,* at the principal office of the Exchange, and at the Commission's Public Reference Room.

II. Self-Regulatory Organization's Statement of the Purpose of, and Statutory Basis for, the Proposed Rule Change

In its filing with the Commission, the self-regulatory organization included statements concerning the purpose of and basis for the proposed rule change and discussed any comments it received on the proposed rule change. The text of those statements may be examined at the places specified in Item IV below. The Exchange has prepared summaries, set forth in sections A, B, and C below, of the most significant parts of such statements.

A. Self-Regulatory Organization's Statement of the Purpose of, and the Statutory Basis for, the Proposed Rule Change

1. Purpose

The Exchange proposes to amend the Fee Schedule to introduce monthly fees for the use of ports that provide connectivity to the Exchange's trading systems (i.e., ports for entry of orders and/or quotes (''order/quote entry ports'')) as well as for ports that allow for the receipt of ''drop copies'' of order or transaction information (''drop copy ports'' and, together with order/quote entry ports, ''ports'').[4] The Exchange proposes to implement the fee changes on November 1, 2012.

The Exchange currently makes order/quote entry ports available for connectivity to its trading systems, but does not currently charge for order/quote entry ports related to option activity on NYSE Amex Options. The Exchange proposes to implement fees for order/quote entry ports on a per port basis. More specifically, the Exchange proposes to charge $200 per port per month for order/quote entry ports; provided, however, that (i) the first five order/quote entry ports authorized for option activity on NYSE Amex Options would not be charged and the proposed $200 per port fee would be decreased to $100 per port per month for ports 101 or more,[5] and (ii) unutilized order/quote entry ports that connect to the Exchange via its backup datacenter would be considered established for backup purposes and not charged port fees.[6]

---

[25] 17 CFR 200.30–3(a)(12).

[1] 15 U.S.C. 78s(b)(1).

[2] 15 U.S.C. 78a.

[3] 17 CFR 240.19b–4.

[4] Firms receive confirmations of their orders and receive execution reports via the order/quote entry port that is used to enter the order or quote. A ''drop copy'' contains redundant information that a firm chooses to have ''dropped'' to another destination (e.g., to allow the firm's back office and/or compliance department, or another firm—typically the firm's clearing broker—to have immediate access to the information). Such drop copies can only be sent via a drop copy port. Drop copy ports cannot be used to enter orders and/or quotes.

[5] For example, if five ports are authorized for order/quote activity, there would be no charge. However, a sixth order/quote entry port would be charged $200. 50 order/quote entry ports would be charged $9,000 total (i.e., 45 × $200) and 100 order/quote entry ports would be charged $19,000 total (i.e., 95 × $200). However, 120 order/quote entry ports would be charged $21,000 total (i.e., 95 × $200 plus 20 × $100). For purposes of calculating the number of order/quote entry ports, the Exchange proposes to aggregate the ports of affiliates. An affiliate would be a person or firm that directly, or indirectly through one or more intermediaries, controls or is controlled by, or is under common control with, the firm. *See* NYSE Amex Options Rule 900.2NY(1).

[6] The Exchange's backup datacenter is currently located in Chicago, Illinois.

The Exchange proposes that unutilized order/quote entry ports that connect to the Exchange via its backup datacenter and are not utilized be considered established for backup purposes and not charged port fees. However, if activity were conducted through one of these order/quote entry ports, whether for backup or any other purposes, port fees would apply for the relevant month or months. In this regard, the Exchange notes that it monitors usage of these particular ports. Accordingly, if an order/quote were sent to the Exchange via one of these ports, then the port would be charged the applicable monthly port fee.

The Exchange proposes to implement a fee of $500 for drop copy ports.[7] Additionally, the Exchange proposes to specify that only one fee per drop copy port would apply, even if the port receives drop copies from multiple order/quote entry ports.

The Exchange also proposes that drop copy ports that connect to the Exchange via its backup datacenter not be charged if the drop copy port is configured such that it is duplicative of another drop copy port of the same user, regardless of whether the drop copy port is utilized or not. The Exchange is proposing to treat drop copy ports in this manner because a firm would not derive any value or utility from a drop copy port in the datacenter that is duplicative of another drop copy port that it already has outside of the datacenter, in that, because drop copy ports are used to send duplicative information, a second drop copy port carrying the same information would not be a useful resource, except for a backup purpose.

Overall, the Exchange believes that the changes proposed herein will result in a method of billing for ports that is closely aligned with the needs of firms with ports and permit the Exchange to remain competitive with other exchanges with respect to fees charged for ports.[8] The Exchange notes that the proposed changes are not otherwise intended to address any other issues surrounding ports or port fees and that the Exchange is not aware of any problems that port users would have in complying with the proposed change.

The Exchange proposes to implement these changes on November 1, 2012. In this regard, the Exchange notes that billing for ports would be based on the number of ports on the third business day prior to the end of the month. In addition, the level of activity with respect to a particular port would not affect the assessment of monthly fees, such that, except for ports that are not charged and ports considered established for backup purposes, even if a particular port is not used, a port fee would still apply.

2. Statutory Basis

The Exchange believes that the proposed rule change is consistent with Section 6(b) of the Securities Exchange Act of 1934 (the ''Act''),[9] in general, and furthers the objectives of Section 6(b)(4) of the Act,[10] in particular, because it provides for the equitable allocation of reasonable dues, fees, and other charges among its members, issuers and other persons using its facilities and does not unfairly discriminate between customers, issuers, brokers or dealers.

Overall, the Exchange believes that the proposed changes, including the rates proposed, are reasonable because the fees charged for order/quote entry ports and drop copy ports are expected to permit the exchange to offset, in part, its connectivity costs associated with making such ports available, including costs based on gateway software and hardware enhancements and resources dedicated to gateway development, quality assurance, and support. In this regard, the Exchange believes that its fees are competitive with those charged by other venues, and that in some cases its port fees are less expensive than many of its primary competitors.[11] The Exchange believes that the changes proposed herein will result in a method of billing for ports that is closely aligned with the needs of firms with ports.

The Exchange believes that the proposed methodology for billing for order/quote entry ports is reasonable because it will allow a firm to request, and pay for, the specific number of ports that it requires. This aspect of the proposed change is also equitable and not unfairly discriminatory because it will result in charges for order/entry ports being based on the number of ports utilized. This aspect of the proposed change is also equitable and not unfairly discriminatory because it will apply on an equal basis for all ports on the Exchange, except for order/quote entry ports in the backup datacenter that are not utilized.[12]

The Exchange believes that it is reasonable to charge $200 per port per month for order/quote entry ports because it is comparable to the rates of other exchanges.[13] The Exchange also believes that the fees are equitable and not unfairly discriminatory because they would apply to all users of order/quote entry ports on the Exchange, subject to the exception noted above.

The Exchange also believes that it is equitable and not unfairly discriminatory to provide the first five option order/quote entry ports for free and to decrease the rate to $100 for ports 101 and greater. Specifically, providing the first five option ports without charge would allow firms to adapt to the introduction of the fees for ports. Additionally, decreasing the fee to $100 per port for more than 100 ports would permit those firms that have multiple order/quote entry ports to maintain connections to the Exchange, despite the port fees that would apply as a result of this proposed change. Further, the Exchange notes that option Market Makers would, generally, be the type of market participant that would have more than 100 ports. This is due in large part to the significant number of series that exist for any particular option class[14] and the corresponding obligations that NYSE Amex Option Market Makers have to maintain a bid or offer in assigned classes. Furthermore, Market Makers that quote across a significant number, if not all, of the 2207 classes traded on the Exchange[15] have responsibility for upwards of 400,000 individual option series. Accordingly, the level of activity that is required to satisfy the quoting obligations, which directly relates to the number of ports needed, is such that the Exchange believes it is equitable and not unfairly discriminatory to provide the first five option order/quote entry ports for free and to decrease the per port charge for firms that have more than 100 order/quote entry ports on the Exchange.[16]

The Exchange believes that the proposed new fee for drop copy ports is reasonable because it will result in a fee being charged for the use of technology and infrastructure provided by the

[7] *See supra* note 4.

[8] For example, the charge for connectivity to the NASDAQ Stock Market LLC (''NASDAQ'') NY-Metro and Mid-Atlantic Datacenters is $500 and a separate charge for Pre-Trade Risk Management ports is applicable, which ranges from $400 to $600 and is capped at $25,000 per firm per month. Also, the BATS Exchange, Inc. (''BZX'') charges $400 per month per pair (primary and secondary data center) for logical ports. Additionally, EDGA Exchange, Inc. (''EDGA'') and EDGX Exchange, Inc. (''EDGX'') each charge $500 per port. EDGA and EDGX also provide the first five ports for free.

[9] 15 U.S.C. 78f(b).

[10] 15 U.S.C. 78f(b)(4).

[11] *See supra* note 8.

[12] The Exchange describes below how the proposed changes regarding the backup datacenter are consistent with the Act.

[13] *See supra* note 8.

[14] For example, as of October 18, 2012, there were more than 1800 individual option series overlying Google, Inc.

[15] As of October 18, 2012.

[16] *See supra* note 5.

Exchange. In this regard, the Exchange believes that the rate is reasonable because it is comparable to the rate charged by other exchanges for drop copy ports.[17] Furthermore, the Exchange believes that the proposed rate for a drop copy port is reasonable because, when compared to the proposed rate for order/quote entry ports, it reflects the level of resources required of the Exchange to establish and maintain the port, including the various sources from which data comes (i.e., establishing connections to order/quote entry ports). The proposed rate is also reasonable in light of the functional/operational differences between a drop copy port and an order/quote entry port (e.g., that configuration and monitoring of the drop copy port is more substantial and because drop copy ports capture cumulative activity).

The Exchange also believes that it is reasonable that only one fee per drop copy port would apply, even if the port receives drop copies from multiple order/quote entry ports, because the purpose of drop copies is such that a trading unit's or a firm's entire order and execution activity is captured, including with respect to both equities and options [sic]. This is also reflected in the rate of $500 that is proposed for drop copy ports, which is higher than the rate proposed for order/quote entry ports. The Exchange believes that the proposed new fee for drop copy ports is equitable and not unfairly discriminatory because it will apply on an equal basis to all users of drop copy ports and to all drop copy ports on the Exchange, except for ports in the backup datacenter.[18] In this regard, all firms are able to request drop copy ports, as is the case with order/quote entry ports.

The Exchange believes that it is reasonable to not charge for order/quote entry ports in its backup datacenter that are not utilized. However, the exchange does not restrict firms from using order/quote entry ports from the backup datacenter and, as described above, if one of these ports is utilized for order/quote entry, then port fees would apply. The Exchange believes that this is equitable and not unfairly discriminatory because it would permit firms to have ports established for backup purposes, should they ever be needed, without the burden of paying for such ports when they are not utilized. The Exchange believes this is equitable and not unfairly discriminatory because firms will not be disincentivized from requesting backup ports because of a fee that may otherwise apply. This would contribute to the efficiency of a backup process if primary order/quote entry ports ever became unavailable.

The Exchange also believes that it is reasonable to not charge for drop copy ports in its backup datacenter if configured such that it is duplicative of another drop copy port of the same user, regardless of whether the drop copy port is utilized or not. The Exchange believes that it is reasonable to treat drop copy ports in this manner because a firm would not derive any value/use from a drop copy port in the datacenter that is duplicative of another drop copy port that it already has outside of the datacenter (i.e., because drop copy ports are used to send duplicative information anyways, a second drop copy port carrying the same information would not be a useful resource), except for a backup purpose. The Exchange believes that this is equitable and not unfairly discriminatory because it would permit firms to have ports established for drop copy purposes in the backup datacenter, should they ever be needed, without the burden of paying for such ports. Because the drop copy port would not be providing any information that the firm did not already have, since the port would be configured such that it is duplicative of another drop copy port of the same user, the Exchange believes that it is equitable and not unfairly discriminatory to treat order/quote entry ports and drop copy ports differently in this manner. The Exchange believes this is also equitable and not unfairly discriminatory because firms will not be disincentivized from requesting backup drop copy ports because of a fee that may otherwise apply. This would contribute to the efficiency of a backup process if primary drop copy ports ever became unavailable.

Finally, the Exchange notes that it operates in a highly competitive market in which market participants can readily favor competing venues. In such an environment, the Exchange must continually review, and consider adjusting, its fees and credits to remain competitive with other exchanges. For the reasons described above, the Exchange believes that the proposed rule change reflects this competitive environment.

B. Self-Regulatory Organization's Statement on Burden on Competition

The Exchange does not believe that the proposed rule change will impose any burden on competition that is not necessary or appropriate in furtherance of the purposes of the Act.

C. Self-Regulatory Organization's Statement on Comments on the Proposed Rule Change Received From Members, Participants, or Others

No written comments were solicited or received with respect to the proposed rule change.

III. Date of Effectiveness of the Proposed Rule Change and Timing for Commission Action

The foregoing rule change is effective upon filing pursuant to Section 19(b)(3)(A)[19] of the Act and subparagraph (f)(2) of Rule 19b–4[20] thereunder, because it establishes a due, fee, or other charge imposed by the NYSE MKT.

At any time within 60 days of the filing of such proposed rule change, the Commission summarily may temporarily suspend such rule change if it appears to the Commission that such action is necessary or appropriate in the public interest, for the protection of investors, or otherwise in furtherance of the purposes of the Act.

IV. Solicitation of Comments

Interested persons are invited to submit written data, views, and arguments concerning the foregoing, including whether the proposed rule change is consistent with the Act. Comments may be submitted by any of the following methods:

Electronic Comments

- Use the Commission's Internet comment form (*http://www.sec.gov/rules/sro.shtml*); or
- Send an email to *rule-comments@sec.gov*. Please include File Number SR–NYSEMKT–2012–60 on the subject line.

Paper Comments

- Send paper comments in triplicate to Elizabeth M. Murphy, Secretary, Securities and Exchange Commission, 100 F Street NE., Washington, DC 20549–1090.

All submissions should refer to File Number *SR–NYSEMKT–2012–60.* This file number should be included on the subject line if email is used. To help the Commission process and review your comments more efficiently, please use only one method. The Commission will post all comments on the Commission's Internet Web site (*http://www.sec.gov/rules/sro.shtml*). Copies of the submission, all subsequent amendments, all written statements with respect to the proposed rule change that are filed with the

[17] *See supra* note 8.

[18] *See supra* note 12.

[19] 15 U.S.C. 78s(b)(3)(A).

[20] 17 CFR 240.19b–4(f)(2).

Commission, and all written communications relating to the proposed rule change between the Commission and any person, other than those that may be withheld from the public in accordance with the provisions of 5 U.S.C. 552, will be available for Web site viewing and printing in the Commission's Public Reference Room, 100 F Street NE., Washington, DC 20549–1090, on official business days between the hours of 10:00 a.m. and 3:00 p.m. Copies of the filing will also be available for inspection and copying at the NYSE's principal office and on its Internet Web site at *www.nyse.com.* All comments received will be posted without change; the Commission does not edit personal identifying information from submissions. You should submit only information that you wish to make available publicly. All submissions should refer to File Number SR–NYSEMKT–2012–60 and should be submitted on or before December 11, 2012.

For the Commission, by the Division of Trading and Markets, pursuant to delegated authority.[21]

Kevin M. O'Neill,

Deputy Secretary.

[FR Doc. 2012–28148 Filed 11–19–12; 8:45 am]

BILLING CODE 8011–01–P

SECURITIES AND EXCHANGE COMMISSION

[Release No. 34–68232; File No. SR–NASDAQ–2012–127]

Self-Regulatory Organizations; The NASDAQ Stock Market LLC; Notice of Filing and Immediate Effectiveness of Proposed Rule Change Relating to Non-Penny Pilot and Penny Pilot Options

November 14, 2012.

Pursuant to Section 19(b)(1) of the Securities Exchange Act of 1934 (''Act''),[1] and Rule 19b–4 [2] thereunder, notice is hereby given that, on November 1, 2012, The NASDAQ Stock Market LLC (''Nasdaq'' or ''Exchange'') filed with the Securities and Exchange Commission (''SEC'' or ''Commission'') the proposed rule change as described in Items I, II and III below, which Items have been prepared by the Exchange. The Commission is publishing this notice to solicit comments on the proposed rule change from interested persons.

I. Self-Regulatory Organization's Statement of the Terms of Substance of the Proposed Rule Change

The NASDAQ Stock Market LLC proposes to modify Chapter XV, entitled ''Options Pricing,'' at Section 2 governing pricing for NASDAQ members using the NASDAQ Options Market (''NOM''), NASDAQ's facility for executing and routing standardized equity and index options. Specifically, NOM proposes to amend the Non-Penny Pilot Options Fees for Removing Liquidity and the Customer Rebate to Add Liquidity as well as the Penny Pilot Options Customer Rebate to Add Liquidity.

While the changes proposed herein are effective upon filing, the Exchange has designated that the amendments related to fee increases will be operative on November 2, 2012.[3]

The text of the proposed rule change is available on the Exchange's Web site at *http://www.nasdaq.cchwallstreet.com,* at the principal office of the Exchange, and at the Commission's Public Reference Room.

II. Self-Regulatory Organization's Statement of the Purpose of, and Statutory Basis for, the Proposed Rule Change

In its filing with the Commission, the Exchange included statements concerning the purpose of and basis for the proposed rule change and discussed any comments it received on the proposed rule change. The text of these statements may be examined at the places specified in Item IV below. The Exchange has prepared summaries, set forth in sections A, B, and C below, of the most significant aspects of such statements.

A. Self-Regulatory Organization's Statement of the Purpose of, and Statutory Basis for, the Proposed Rule Change

1. Purpose

NASDAQ proposes to modify Chapter XV, entitled ''Options Pricing,'' at Section 2(1) governing the rebates and fees assessed for option orders entered into NOM. The Exchange is proposing to increase certain Non-Penny Pilot Options Fees for Removing Liquidity in order to offer increased Penny Pilot and Non-Penny Pilot Options Customer Rebates to Add Liquidity to attract additional order flow to the Exchange to the benefit of all market participants.

The Exchange proposes to amend the Fees for Removing Liquidity in Non-Penny Pilot Options. Today Customers and NOM Market Makers are assessed a $0.79 per contract Fee for Removing Liquidity in Non-Penny Pilot Options and Professionals, Firms and Non-NOM Market Makers are assessed an $0.85 per contract Fee for Removing Liquidity in Non-Penny Pilot Options. The Exchange proposes to increase the Customer and NOM Market Maker Fees for Removing Liquidity in Non-Penny Pilot Options from $0.79 to $0.82 per contract and also increase the Professional, Firm and Non-NOM Market Maker Fees for Removing Liquidity in Non-Penny Pilot Options from $0.85 per to $0.89 per contract. The Exchange proposes that these amendments will become operative on November 2, 2012.

The Exchange also proposes to amend the Customer Rebate to Add Liquidity in Non-Penny Pilot Options. Today, the Customer Rebate to Add Liquidity in Non-Penny Pilot Options, including NDX, is $0.75 per contract, unless a market participant adds Customer Liquidity in either or both Penny Pilot or Non-Penny Pilot Options (including NDX) of 115,000 contracts per day in a month, then the Customer Rebate to Add Liquidity in Non-Penny Pilot Options is $0.77 per contract.[4] The Exchange proposes to increase the Customer Rebate to Add Liquidity in Non-Penny Pilot Options, including NDX, from $0.75 to $0.80 per contract and also to increase the Customer Rebate to Add Liquidity in Non-Penny Pilot Options when a market participant adds Customer Liquidity in either or both Penny Pilot or Non-Penny Pilot Options (including NDX) of 115,000 contracts per day in a month from $0.77 to $0.81 per contract. The Exchange proposes that these amendments become immediately effective.

The Exchange also proposes to amend the Customer Rebate to Add Liquidity in Penny Pilot Options. Today, the Exchange pays Customer Rebates to Add Liquidity on Penny Pilot Options as follows:

[21] 17 CFR 200.30–3(a)(12).

[1] 15 U.S.C. 78s(b)(1).

[2] 17 CFR 240.19b–4.

[3] The amendments related to the Fees for Removing Liquidity in Non-Penny Pilot Options would be operative on November 2, 2012.

[4] NOM Participants under common ownership may aggregate their Customer volume to qualify for the increased Customer rebate. Common ownership is defined as 75 percent common ownership or control.

	Monthly volume	Rebate to add liquidity
Tier 1	Participant adds Customer liquidity of up to 34,999 contracts per day in a month	$0.26
Tier 2	Participant adds Customer liquidity of 35,000 to 74,999 contracts per day in a month	0.43
Tier 3	Participant adds Customer liquidity of 75,000 or more contracts per day in a month	0.44
Tier 4 [a]	Participant adds (1) Customer liquidity of 25,000 or more contracts per day in a month, (2) the Participant has certified for the Investor Support Program set forth in Rule 7014; and (3) the Participant executed at least one order on NASDAQ's equity market.	0.42
Tier 5 [b,c]	Participant has Total Volume of 130,000 or more contracts per day in a month	0.45

[a] For purposes of Tier 4, the Exchange will allow a NOM Participant to qualify for the rebate if a NASDAQ member under common ownership with the NOM Participant has certified for the Investor Support Program and executed at least one order on NASDAQ's equity market. Common ownership is defined as 75 percent common ownership or control.

[b] For purposes of Tier 5, ''Total Volume'' shall be defined as Customer, Professional, Firm, Non-NOM Market Maker and NOM Market Maker volume in Penny Pilot Options and Non-Penny Pilot Options which either adds or removes liquidity.

[c] For purposes of Tier 5, the Exchange will allow NOM Participants under common ownership to aggregate their volume to qualify for the rebate. Common ownership is defined as 75 percent common ownership or control.

The Exchange proposes to amend the Tier 5 rebate which pays a $0.45 per contract Rebate to Add Liquidity to NOM Options Participants that have Total Volume of 130,000 or more contracts per day in a month.[5] Total Volume is defined as Customer, Professional, Firm, Non-NOM Market Maker and NOM Market Maker volume in Penny Pilot Options and Non-Penny Pilot Options which either adds or removes liquidity. The Exchange proposes to amend the Tier 5 rebate from $0.45 to $0.46 per contract.[6] The Exchange proposes that this amendment become immediately effective.

2. Statutory Basis

NASDAQ believes that the proposed rule changes are consistent with the provisions of Section 6 of the Act,[7] in general, and with Section 6(b)(4) of the Act,[8] in particular, in that they provide for the equitable allocation of reasonable dues, fees and other charges among members and issuers and other persons using any facility or system which NASDAQ operates or controls.

The Exchange believes increasing the Fees for Removing Liquidity in Non-Penny Pilot Options for all market participants is reasonable because the increased fees permit the Exchange to offer increased Customer Rebates to Add Liquidity in both Penny Pilot and Non-Penny Pilot Options. Also, the proposed Fees for Removing Liquidity are similar to the non-Penny Pilot Options fees at BATS Exchange, Inc. (''BATS'').[9]

The Exchange believes that increasing the Professional, Firm and Non-NOM Market Maker Fees for Removing Liquidity from $0.85 to $0.89 per contract is equitable and not unfairly discriminatory because all market participants would be assessed the same Fees for Removing Liquidity in Non-Penny Pilot Options, except Customers and NOM Market Makers. The Exchange believes that it is equitable and not unfairly discriminatory to increase Customer and NOM Market Maker Non-Penny Pilot Fees for Removing Liquidity from $0.79 to $0.82 per contract because Customers and NOM Market Makers each bring benefits to the market. The Exchange believes that Customer order flow brings unique benefits to the market which benefits all market participants through increased liquidity. NOM Market Makers have obligations to the market and regulatory requirements,[10] which normally do not apply to other market participants. A NOM Market Maker has the obligation to make continuous markets, engage in a course of dealings reasonably calculated to contribute to the maintenance of a fair and orderly market, and not make bids or offers or enter into transactions that are inconsistent with a course of dealings. The proposed differentiation as between Customers and NOM Market Makers and other market participants recognizes the differing contributions made to the liquidity and trading environment on the Exchange by Customers and NOM Market Makers, as well as the differing mix of orders entered.

The Exchange believes that increasing the Customer Rebate to Add Liquidity in Non-Penny Pilot Options, including NDX, from $0.75 to $0.80 per contract and also increasing the Customer Rebate to Add Liquidity in Non-Penny Pilot Options when a market participant adds Customer Liquidity in either or both Penny Pilot or Non-Penny Pilot Options (including NDX) of 115,000 contracts per day in a month from $0.77 to $0.81 per contract is reasonable because these increased rebates would continue to attract Customer order flow to the Exchange in Non-Penny Pilot Options. Today, NOM Options Participants have the ability to earn a $0.75 per contract Customer Rebate to Add Liquidity in Non-Penny Pilot Options and an increased rebate of $0.77 when a market participant adds Customer Liquidity in either or both Penny Pilot or Non-Penny Pilot Options (including NDX) of 115,000 contracts per day in a month. By increasing both the Customer Rebate to Add Liquidity to $0.80 per contract and the Customer Rebate for market participants that add Customer in either or both Penny Pilot or Non-Penny Pilot Options (including NDX) of 115,000 contracts per day in a month to $0.81 per contract should encourage market participants to send additional order flow to NOM to obtain an even greater Customer Rebate to Add Liquidity in Non-Penny Pilot Options.

The Exchange believes that increasing the Customer Rebate to Add Liquidity in Non-Penny Pilot Options, including NDX, from $0.75 to $0.80 per contract and also increasing the Customer Rebate to Add Liquidity in Non-Penny Pilot Options when a market participant adds Customer Liquidity in either or both Penny Pilot or Non-Penny Pilot Options (including NDX) of 115,000 contracts

[5] For purposes of Tier 5, the Exchange allows NOM Participants under common ownership to aggregate their volume to qualify for the rebate. Common ownership is defined as 75 percent common ownership or control.

[6] The Exchange is not proposing to otherwise amend Tier 5 or any other Penny Pilot Options Customer rebate tier.

[7] 15 U.S.C. 78f.

[8] 15 U.S.C. 78f(b)(4).

[9] BATS is amending pricing effective November 1, 2012 to increase non-customer non-Penny pricing from $0.80 to $0.84 per contract. *See* BATS alert titled ''BATS Options Exchange Pricing Effective November 1, 2012.''

[10] Pursuant to Chapter VII (Market Participants), Section 5 (Obligations of Market Makers), in registering as a market maker, an Options Participant commits himself to various obligations. Transactions of a Market Maker in its market making capacity must constitute a course of dealings reasonably calculated to contribute to the maintenance of a fair and orderly market, and Market Makers should not make bids or offers or enter into transactions that are inconsistent with such course of dealings. Further, all Market Makers are designated as specialists on NOM for all purposes under the Act or rules thereunder. *See* Chapter VII, Section 5.

per day in a month from $0.77 to $0.81 per contract is equitable and not unfairly discriminatory because Customer order flow brings unique benefits to the market which benefits all market participants. The Exchange believes that its success at attracting Customer order flow benefits all market participants by improving the quality of order interaction and executions at the Exchange. These increased rebates are available to all NOM Options Participants acting as agent for Customer orders and in the case of the enhanced rebate of $0.81 per contract, all NOM Options Participants that send 115,000 contracts per day in a month in either or both Penny Pilot or Non-Penny Pilot Options would be entitled to receive the enhanced rebate.

In the current U.S. options market, many of the contracts are quoted in pennies. Under this pricing structure, the minimum penny tick increment equates to a $1.00 economic value difference per contract, given that a single standardized U.S. option contract covers 100 shares of the underlying stock. Where contracts are quoted in $0.05 increments (non-pennies), the value per tick is $5.00 in proceeds to the investor transacting in these contracts. Liquidity rebate and access fee structures on the make-take exchanges, including NOM, for securities quoted in penny increments are commonly in the $0.30 to $0.45 per contract range.[11] A $0.30 per contract rebate in a penny quoted security is a rebate equivalent to 30% of the value of the minimum tick. A $0.45 per contract fee in a penny quoted security is a charge equivalent to 45% of the value of that minimum tick. In other words, in penny quoted securities, where the price is improved by one tick with an access fee of $0.45 per contract, an investor paying to access that quote is still $0.55 better off than trading at the wider spread, even without the access fee ($1.00 of price improvement −$0.45 access fee = $0.55 better economics). This computation is equally true for securities quoted in wider increments. Rebates and access fees near the $0.89 per contract level equate to only 17.8% of the value of the minimum tick in Non-Penny Pilot Options, less than the experience today in Penny Pilot Options. For example, a retail investor transacting a single contract in a non-penny quoted security quoted a single tick tighter than the rest of the market, and paying an access fee of $0.82 per contract, is receiving an economic benefit of $4.18 ($0.05 improved tick = $5.00 in proceeds − $0.82 access fee = $4.18). The Exchange believes that encouraging NOM Market Makers to quote more aggressively by maintaining reducing transaction fees[12] and incentivizing Customer orders to post on NOM will narrow the spread in Non-Penny Pilot Options to the benefit of investors and all market participants by improving the overall economics of the resulting transactions that occur on the Exchange, even if the access fee paid in connection with such transactions is higher. Accordingly, the Exchange believes that the proposed fees and rebates for Non-Penny Pilot Options are reasonable, equitable and not unfairly discriminatory.

The Exchange believes that the proposed increase to the Tier 5 Customer Rebate to Add Liquidity in Penny Pilot Options is reasonable because the increased rebate would encourage broker-dealers acting as agent for Customer orders to select the Exchange as a venue to post Customer orders. The Exchange believes the existing monthly volume thresholds have incentivized firms to increase Customer order flow to the Exchange. The Exchange desires to continue to encourage firms to route Customer orders to the Exchange by offering an increased Customer rebate.

The Exchange believes that the proposed increase to the Tier 5 Customer Rebate to Add Liquidity in Penny Pilot Options is equitable and not unfairly discriminatory because the Exchange is proposing to offer an even higher Tier 5 Customer rebate in Penny Pilot Options of $0.46 per contract to NOM Participants which will be based on Total Volume. NOM Participants may total all Penny Pilot Option and Non-Penny Pilot Option volume that either adds or removes liquidity to reach the 130,000 volume requirement and qualify to obtain this rebate. All NOM Participants that transact Customer orders in Penny Pilot Options are eligible for the Customer rebates.[13]

The Exchange operates in a highly competitive market comprised of ten U.S. options exchanges in which sophisticated and knowledgeable market participants can and do send order flow to competing exchanges if they deem fee levels at a particular exchange to be excessive or rebate opportunities to be inadequate. The Exchange believes that the proposed rebate scheme and fees are competitive and similar to other fees, rebates and tier opportunities in place on other exchanges. The Exchange believes that this competitive marketplace materially impacts rebates and fees present on the Exchange today and substantially influences the proposal set forth above.

B. Self-Regulatory Organization's Statement on Burden on Competition

NASDAQ does not believe that the proposed rule changes will result in any burden on competition that is not necessary or appropriate in furtherance of the purposes of the Act, as amended. To the contrary, NASDAQ has designed its rebates and fees to compete effectively for the execution and routing of options contracts and to reduce the overall cost to investors of options trading. The Exchange believes that incentivizing NOM Participants to transact greater Customer volume on the Exchange benefits all market participants because of the increased liquidity to the market.

C. Self-Regulatory Organization's Statement on Comments on the Proposed Rule Change Received From Members, Participants, or Others

No written comments were either solicited or received.

III. Date of Effectiveness of the Proposed Rule Change and Timing for Commission Action

The foregoing rule change has become effective pursuant to Section 19(b)(3)(A)(ii) of the Act.[14] At any time within 60 days of the filing of the proposed rule change, the Commission summarily may temporarily suspend such rule change if it appears to the Commission that such action is necessary or appropriate in the public interest, for the protection of investors, or otherwise in furtherance of the purposes of the Act. If the Commission takes such action, the Commission shall institute proceedings to determine whether the proposed rule should be approved or disapproved.

[11] NOM is proposing to only pay a Customer a Rebate to Add Liquidity in Non-Penny Pilot Options. Other market participants would not be entitled to a rebate.

[12] The Exchange notes that the proposed $0.25 per contract NOM Market Maker Fee for Adding in Non-Penny Pilot Options is significantly less than transaction fees plus payment for order flow fees assessed by other options exchanges. For example, on NASDAQ OMX PHLX LLC ("Phlx"), the combined payment for order flow fee plus the transaction fee is $0.92 per contract. *See* Phlx's Pricing Schedule. Unlike Penny Pilot Options, the Exchange believes this significant reduction in fees for adding liquidity will have the same effect as a rebate in non-Penny Pilot Options in terms of a narrower spread.

[13] Tier 1 pays a rebate for NOM Participants that add Customer liquidity of up to 14,999 contracts per day in a month of Penny Pilot Options. There is no required minimum volume of Customer orders to qualify for a Customer Rebate to Add Liquidity.

[14] 15 U.S.C. 78s(b)(3)(A)(ii).

IV. Solicitation of Comments

Interested persons are invited to submit written data, views, and arguments concerning the foregoing, including whether the proposed rule change is consistent with the Act. Comments may be submitted by any of the following methods:

Electronic Comments

- Use the Commission's Internet comment form (*http://www.sec.gov/rules/sro.shtml*); or
- Send an email to *rule-comments@sec.gov*. Please include File Number SR–NASDAQ–2012–127 on the subject line.

Paper Comments

- Send paper comments in triplicate to Elizabeth M. Murphy, Secretary, Securities and Exchange Commission, 100 F Street NE., Washington, DC 20549–1090.

All submissions should refer to File Number SR–NASDAQ–2012–127. This file number should be included on the subject line if email is used. To help the Commission process and review your comments more efficiently, please use only one method. The Commission will post all comments on the Commission's Internet Web site (*http://www.sec.gov/rules/sro.shtml*). Copies of the submission, all subsequent amendments, all written statements with respect to the proposed rule change that are filed with the Commission, and all written communications relating to the proposed rule change between the Commission and any person, other than those that may be withheld from the public in accordance with the provisions of 5 U.S.C. 552, will be available for Web site viewing and printing in the Commission's Public Reference Room, 100 F Street NE., Washington, DC 20549, on official business days between the hours of 10:00 a.m. and 3:00 p.m. Copies of the filing also will be available for inspection and copying at the principal office of the Exchange. All comments received will be posted without change; the Commission does not edit personal identifying information from submissions. You should submit only information that you wish to make available publicly. All submissions should refer to File Number SR–NASDAQ–2012–127 and should be submitted on or before December 11, 2012.

[15] 17 CFR 200.30–3(a)(12).

For the Commission, by the Division of Trading and Markets, pursuant to delegated authority.[15]

Kevin M. O'Neill,

Deputy Secretary.

[FR Doc. 2012–28176 Filed 11–19–12; 8:45 am]

BILLING CODE 8011–01–P

SECURITIES AND EXCHANGE COMMISSION

[Release No. 34–68229; File No. SR–NYSE–2012–60]

Self-Regulatory Organizations; New York Stock Exchange LLC; Notice of Filing and Immediate Effectiveness of Proposed Rule Change To Change the Monthly Fees for the Use of Ports

November 14, 2012.

Pursuant to Section 19(b)(1) of the Securities Exchange Act of 1934 (''Act'')[1] and Rule 19b–4 thereunder,[2] notice is hereby given that, on November 1, 2012, New York Stock Exchange LLC (the ''Exchange'' or ''NYSE'') filed with the Securities and Exchange Commission (''Commission'') the proposed rule change as described in Items I, II and III below, which Items have been prepared by the Exchange. The Commission is publishing this notice to solicit comments on the proposed rule change from interested persons.

I. Self-Regulatory Organization's Statement of the Terms of Substance of the Proposed Rule Change

The Exchange proposes to amend its Price List to change the monthly fees for the use of ports. The text of the proposed rule change is available on the Exchange's Web site at *www.nyse.com,* at the principal office of the Exchange, and at the Commission's Public Reference Room.

II. Self-Regulatory Organization's Statement of the Purpose of, and Statutory Basis for, the Proposed Rule Change

In its filing with the Commission, the self-regulatory organization included statements concerning the purpose of, and basis for, the proposed rule change and discussed any comments it received on the proposed rule change. The text of those statements may be examined at the places specified in Item IV below. The Exchange has prepared summaries, set forth in sections A, B, and C below, of the most significant parts of such statements.

[1] 15 U.S.C. 78s(b)(1).

[2] 17 CFR 240.19b–4.

A. Self-Regulatory Organization's Statement of the Purpose of, and Statutory Basis for, the Proposed Rule Change

1. Purpose

The Exchange proposes to amend its Price List to change the monthly fees for the use of ports that provide connectivity to the Exchange's trading systems (i.e., ports for entry of orders and/or quotes (''order/quote entry ports'')) and to implement a fee for ports that allow for the receipt of ''drop copies'' of order or transaction information (''drop copy ports'' and, together with order/quote entry ports, ''ports'').[3] The Exchange proposes to implement the fee changes on November 1, 2012.

Order/Quote Entry Ports

The Exchange currently makes order/quote entry ports available for connectivity to its trading systems and charges $300 per port pair per month for up to five pairs of ports, then $1,500 per month for each additional five pairs of ports.[4]

The Exchange proposes to change the current methodology for order/quote entry port billing, such that order/quote entry ports would be charged on a per port basis, without billing in groups of five and without requiring that ports be in pairs.[5] More specifically, the Exchange proposes to charge $200 per port per month for order/quote entry ports, which are currently charged $300 per pair per month for activity on

[3] Firms receive confirmations of their orders and receive execution reports via the order/quote entry port that is used to enter the order or quote. A ''drop copy'' contains redundant information that a firm chooses to have ''dropped'' to another destination (e.g., to allow the firm's back office and/or compliance department, or another firm—typically the firm's clearing broker—to have immediate access to the information). Such drop copies can only be sent via a drop copy port. Drop copy ports cannot be used to enter orders and/or quotes.

[4] *See* Securities Exchange Act Release No. 63057 (October 6, 2010), 75 FR 63232 (October 14, 2010) (SR–NYSE–2010–70) (the port fee ''Adopting Release''). *See also* Securities Exchange Act Release No. 66107 (January 5, 2012), 77 FR 1759 (January 11, 2012) (SR–NYSE–2011–72) (the port fee ''Amending Release''). For example, the current fee for six pairs of ports would be $3,000 total per month (i.e., $1,500 total for the first five pairs and $1,500 for the sixth pair). The fee would remain $3,000 for pairs seven through 10. The fee would increase by $1,500, to $4,500 total, for pairs 11 through 15.

[5] The Exchange stated in the Adopting Release that the port fee is charged per participant. The Exchange later clarified that ''per participant'' means per member organization for purposes of the port fees. *See* Amending Release, at 1760. The proposed fee change would change the current methodology such that ports would not be charged on a per member organization basis. Accordingly, reference to per member organization would be removed from the Price List related to port fees.

NYSE;[6] provided, however, that (i) users of the Exchange's Risk Management Gateway service (''RMG'') would not be charged for order/quote entry ports if such ports are designated as being used for RMG purposes, and (ii) Designated Market Makers (''DMMs'') would not be charged for order/quote entry ports that connect to the Exchange via the DMM Gateway.[7]

Two methods are available to DMMs to connect to the Exchange: DMM Gateway and CCG. The two methods are quite distinct, however. Only DMMs may utilize the DMM Gateway, and they may only use DMM Gateway when acting in their capacity as a DMM. DMMs are required to use the DMM Gateway for certain DMM-specific functions that relate to the DMM's role on the Exchange and the obligations attendant therewith, which are not applicable to other market participants on the Exchange. By contrast, non-DMMs as well as DMMs may use the CCG, use of the CCG by a DMM is optional, and a DMM that connects to the Exchange via CCG can use the relevant order/quote entry port for orders and quotes both in its capacity as a DMM and for orders and quotes in other securities. Accordingly, because DMMs are required to utilize DMM Gateway, but not CCG, to be able to fulfill their functions as DMMs, the Exchange proposes that DMMs not be charged for order/quote entry ports that connect to the Exchange via the DMM Gateway, but that DMMs, like other market participants, be charged for order/entry ports that connect to the Exchange via the CCG.

The Exchange proposes that users of RMG would not be charged for order/quote entry ports if such ports are designated as being used for RMG purposes. RMG enables Sponsoring member organizations to verify whether a Sponsored Participant's orders comply with order criteria established by the Sponsoring member organization for the Sponsored Participant, including, among other things, criteria related to order size (per order or daily quantity limits), credit limits (per order or daily value), specific symbols or end users.[8] Currently, users of RMG are required to pay the existing order/quote entry port fees for connectivity to the Exchange's trading systems, in addition to the RMG connection fees related to such ports.[9] The Exchange proposes that users of RMG would no longer be required to pay port fees for order/quote entry ports designated as being used for RMG because, in the Exchange's opinion, order/quote entry ports are an integral part of RMG and such users are already charged a fee for RMG, including additional connections related thereto, which the Exchange believes is sufficient to cover its costs related to making the order/quote entry ports available for RMG purposes. Accordingly, the Exchange proposes to specify that port fees are not applicable to order/quote entry ports designated as being used for RMG.

Drop Copy Ports

The Exchange proposes to implement a fee for drop copy ports,[10] for which the Exchange does not currently charge a fee, provided, however, that DMMs would not be charged for drop copy ports that utilize the DMM Gateway and users of RMG would not be charged for drop copy ports if such ports are designated as being used for RMG purposes. The Exchange proposes to charge $500 per port per month for drop copy ports.[11] Additionally, the Exchange proposes to specify that only one fee per drop copy port would apply, even if the port receives drop copies from multiple order/quote entry ports and/or drop copies for activity on both NYSE and NYSE MKT.[12]

DMMs that connect to the Exchange using the DMM Gateway are required to use drop copy ports that utilize the DMM Gateway for their drop copies. Accordingly, the Exchange proposes that DMMs not be charged for drop copy ports that utilize the DMM Gateway, but that DMMs, like other market participants, be charged for drop copy ports that connect to the Exchange via the CCG, as DMMs are not required to use CCG.

In addition, the Exchange proposes that users of RMG would not be charged for drop copy ports if such ports are designated as being used for RMG purposes. The Exchange proposes that users of RMG not be required to pay port fees for drop copy ports designated as being used for RMG because, in the Exchange's opinion, ports are an integral part of RMG and such users are already charged a fee for RMG, including additional connections related thereto, which the Exchange believes is sufficient to cover its costs related to making the ports available for RMG purposes. Accordingly, the Exchange proposes to specify that port fees are not applicable to drop copy ports designated as being used for RMG.

Overall, the Exchange believes that the changes proposed herein will result in the method of billing for ports more closely aligning with the needs of firms with ports. The proposed changes will also permit the Exchange to remain competitive with other exchanges with respect to fees charged for ports.[13] The Exchange notes that the proposed changes are not otherwise intended to address any other issues surrounding ports or port fees and that the Exchange is not aware of any problems that port users would have in complying with the proposed change.

The Exchange proposes to implement these changes on November 1, 2012. In this regard, the Exchange notes that billing for ports would be based, as is currently on the case, on the number of ports on the third business day prior to the end of the month. In addition, the level of activity with respect to a particular port would still not affect the assessment of monthly fees, such that, except for ports that are not charged,

[6] The Exchange has a Common Customer Gateway (''CCG'') that accesses the equity trading systems that it shares with its affiliates, NYSE MKT LLC (''NYSE MKT'') and NYSE Arca, Inc. (''NYSE Arca''), and all ports connect to the CCG. *See, e.g.,* Securities Exchange Act Release No. 64542 (May 25, 2011), 76 FR 31659 (June 1, 2011) (SR–NYSE–2011–13). All NYSE member organizations are also NYSE MKT member organizations and, accordingly, a member organization utilizes its ports for activity on both NYSE and/or NYSE MKT and is charged port fees based on the total number of ports connected to the CCG, whether the ports are used to quote and trade on NYSE, NYSE MKT, and/or both, because those trading systems are integrated. The NYSE Arca trading platform is not integrated in the same manner. Therefore, it does not share its ports with NYSE or NYSE MKT.

[7] Since the Adopting Release, the Exchange has not charged DMMs for order/quote entry ports that have connected to the Exchange via the DMM Gateway. Since 2011, when DMMs first became able to enter orders through CCG, DMM order/quote entry ports connected to the Exchange via the CCG have been, and currently are, charged port fees in accordance with the Price List. DMMs can elect to use the DMM Gateway, the CCG, or both for their connectivity to the Exchange. However, the DMM Gateway must be used for certain DMM-specific functions that relate to the DMM's role on the Exchange and the obligations attendant therewith.

[8] *See* Securities Exchange Act Release No. 59354 (February 3, 2009), 74 FR 6683 (February 10, 2009) (SR–NYSE–2008–101) (order approving RMG). *See also* Securities Exchange Act Release No. 59430 (February 20, 2009), 74 FR 9014 (February 27, 2009) (SR–NYSE–2009–15) (establishing RMG fees).

[9] Currently, a $3,000 charge per month applies for an initial RMG connection and a $1,000 charge for every additional connection thereafter.

[10] *See supra* note 3.

[11] The Exchange proposes to add language to the Price List to differentiate between drop copy ports and order/quote entry ports.

[12] *See supra* note 6.

[13] For example, the charge for connectivity to the NASDAQ Stock Market LLC (''NASDAQ'') NY-Metro and Mid-Atlantic Datacenters is $500 and a separate charge for Pre-Trade Risk Management ports is applicable, which ranges from $400 to $600 and is capped at $25,000 per firm per month. Also, the BATS Exchange, Inc. (''BZX'') charges $400 per month per pair (primary and secondary data center) for logical ports. Additionally, EDGA Exchange, Inc. (''EDGA'') and EDGX Exchange, Inc. (''EDGX'') each charge $500 per port. EDGA and EDGX also provide the first five ports for free.

even if a particular port is not used, a port fee would still apply.

2. Statutory Basis

The Exchange believes that the proposed rule change is consistent with Section 6(b) of the Securities Exchange Act of 1934 (the ''Act''),[14] in general, and furthers the objectives of Section 6(b)(4) of the Act,[15] in particular, because it provides for the equitable allocation of reasonable dues, fees, and other charges among its members, issuers and other persons using its facilities and does not unfairly discriminate between customers, issuers, brokers or dealers.

Overall, the Exchange believes that the proposed changes, including the rates proposed, are reasonable because the fees charged for order/quote entry ports and drop copy ports are expected to permit the exchange to offset, in part, its connectivity costs associated with making such ports available, including costs based on gateway software and hardware enhancements and resources dedicated to gateway development, quality assurance, and support. In this regard, the Exchange believes that its fees are competitive with those charged by other venues, and that in some cases its port fees are less expensive than many of its primary competitors.[16] The Exchange believes that the changes proposed herein will result in the method of billing for ports more closely aligning with the needs of firms with ports.

The Exchange believes that the proposed change to the methodology for billing for order/quote entry ports is reasonable because it will simplify the fees for ports by eliminating the pair requirement and allowing a firm that requires more than five pairs of ports to request, and pay for, the specific number of ports that it requires, rather than requesting ports in pairs and in groups of five. This aspect of the proposed change is also equitable and not unfairly discriminatory because it will result in charges for order/entry ports being based on the number of ports utilized. This aspect of the proposed change is also equitable and not unfairly discriminatory because it will apply on an equal basis for all ports on the Exchange, except for order/quote entry ports related to RMG and ports utilized by DMMs to connect to the Exchange via the DMM Gateway.[17]

The Exchange believes that it is reasonable to charge $200 per port per month for order/quote entry ports because, when combined with the change to the methodology for billing for ports, it could result in a decrease in the overall cost to users of ports. The proposed rate is also reasonable because it is comparable to the rates of other exchanges.[18] The Exchange also believes that these changes to the fees are equitable and not unfairly discriminatory because they would apply to all users of order/quote entry ports on the Exchange, subject to the exceptions noted above.

The Exchange also believes that it is equitable and not unfairly discriminatory to not charge DMMs for order/quote entry ports that connect to the Exchange via the DMM Gateway but to charge DMMs for order/quote entry ports that connect to the Exchange via CCG, because DMMs are required to use the DMM Gateway for certain DMM-specific functions that relate to the DMM's role on the Exchange and the obligations attendant therewith, which are not applicable to other market participants on the Exchange. By contrast, non-DMMs as well as DMMs may use the CCG, use of the CCG by a DMM is optional, and a DMM that connects to the Exchange via CCG can use the relevant order/quote entry port for orders and quotes both in its capacity as a DMM and for orders and quotes in other securities. Accordingly, the Exchange believes that it is equitable and not unfairly discriminatory to charge DMMs for order/quote entry ports that connect to the Exchange via CCG, as use of the CCG is not necessary for DMMs to fulfill their role as DMMs. In addition, a single order/quote entry port that connects to the Exchange via CCG could be used by a DMM both in its capacity as a DMM and for other securities, for which other market participants would be charged port fees. Consequently, the Exchange believes that it is equitable and not unfairly discriminatory that a DMM that connects to the Exchange via CCG would continue to be charged applicable port fees, as is currently the case.

In addition, the Exchange notes that DMM Gateway, unlike CCG, was designed with functionality to help DMMs fulfill their obligations as DMMs efficiently, and so the Exchange believes that to the extent that exempting DMM Gateway from port fees for order/quote entry ports encourages DMMs to use the DMM Gateway to fulfill their obligations helps ensure that that they are in the best position to operate efficiently.

The Exchange believes that the proposed new fee for drop copy ports is reasonable because it will result in a fee being charged for the use of technology and infrastructure provided by the Exchange. In this regard, the Exchange believes that the rate is reasonable because it is comparable to the rate charged by other exchanges for drop copy ports.[19] Furthermore, the Exchange believes that the proposed rate for a drop copy port is reasonable because, when compared to the proposed rate for order/quote entry ports, it reflects the level of resources required of the Exchange to establish and maintain the port, including the various sources from which data comes (i.e., establishing connections to order/quote entry ports as well as, in certain circumstances, to order/quote entry ports on both NYSE and NYSE MKT). The proposed rate is also reasonable in light of the functional/operational differences between a drop copy port and an order/quote entry port (e.g., that configuration and monitoring of the drop copy port is more substantial and because drop copy ports capture cumulative activity).

The Exchange also believes that it is reasonable that only one fee per drop copy port would apply, even if the port receives drop copies from multiple order/quote entry ports and/or from both NYSE and NYSE MKT, because the purpose of drop copies is such that a trading unit's or a firm's entire order and execution activity is captured. This is also reflected in the rate of $500 that is proposed for drop copy ports, which is higher than the rate proposed for order/quote entry ports. The Exchange believes that the proposed new fee for drop copy ports is equitable and not unfairly discriminatory because it will apply on an equal basis to all users of drop copy ports and to all drop copy ports on the Exchange, except for those order/entry ports related to RMG and ports utilized by DMMs to connect to the Exchange via the DMM Gateway.[20] In this regard, all firms are able to request drop copy ports, as is the case with order/quote entry ports.

The Exchange believes that it is equitable and not unfairly discriminatory to not charge DMMs for drop copy ports that connect to the Exchange via the DMM Gateway for the reasons above regarding order/quote entry ports.

The Exchange believes that not charging for ports that are designated to

[14] 15 U.S.C. 78f(b).

[15] 15 U.S.C. 78f(b)(4).

[16] *See supra* note 13.

[17] The Exchange describes below how the proposed changes regarding RMG and DMMs are consistent with the Act.

[18] *See supra* note 13.

[19] See *supra* note 13.

[20] *See supra* note 17.

be used for RMG is reasonable because ports are an integral part of RMG and such users are already charged a fee for RMG, including additional connections related thereto, which the Exchange believes is sufficient to cover its costs related to making the ports available for RMG purposes.[21] In this regard, ports not designated as being used for RMG purposes would remain subject to port fees. The Exchange also believes that this is equitable and not unfairly discriminatory because it would apply equally to all member organizations that utilize RMG, which is fully-voluntary and is available to any member organization.

Finally, the Exchange notes that it operates in a highly competitive market in which market participants can readily favor competing venues. In such an environment, the Exchange must continually review, and consider adjusting, its fees and credits to remain competitive with other exchanges. For the reasons described above, the Exchange believes that the proposed rule change reflects this competitive environment.

B. Self-Regulatory Organization's Statement on Burden on Competition

The Exchange does not believe that the proposed rule change will impose any burden on competition that is not necessary or appropriate in furtherance of the purposes of the Act.

C. Self-Regulatory Organization's Statement on Comments on the Proposed Rule Change Received From Members, Participants, or Others

No written comments were solicited or received with respect to the proposed rule change.

III. Date of Effectiveness of the Proposed Rule Change and Timing for Commission Action

The foregoing rule change is effective upon filing pursuant to Section 19(b)(3)(A)[22] of the Act and subparagraph (f)(2) of Rule 19b–4[23] thereunder, because it establishes a due, fee, or other charge imposed by the NYSE.

At any time within 60 days of the filing of such proposed rule change, the Commission summarily may temporarily suspend such rule change if it appears to the Commission that such action is necessary or appropriate in the public interest, for the protection of investors, or otherwise in furtherance of the purposes of the Act.

[21] *See supra* note 8.

[22] 15 U.S.C. 78s(b)(3)(A).

[23] 17 CFR 240.19b–4(f)(2).

IV. Solicitation of Comments

Interested persons are invited to submit written data, views, and arguments concerning the foregoing, including whether the proposed rule change is consistent with the Act. Comments may be submitted by any of the following methods:

Electronic Comments

- Use the Commission's Internet comment form (*http://www.sec.gov/rules/sro.shtml*); or
- Send an email to *rule-comments@sec.gov*. Please include File Number SR–NYSE–2012–60 on the subject line.

Paper Comments

- Send paper comments in triplicate to Elizabeth M. Murphy, Secretary, Securities and Exchange Commission, 100 F Street NE., Washington, DC 20549–1090.

All submissions should refer to File Number SR–NYSE–2012–60. This file number should be included on the subject line if email is used. To help the Commission process and review your comments more efficiently, please use only one method. The Commission will post all comments on the Commission's Internet Web site (*http://www.sec.gov/rules/sro.shtml).* Copies of the submission, all subsequent amendments, all written statements with respect to the proposed rule change that are filed with the Commission, and all written communications relating to the proposed rule change between the Commission and any person, other than those that may be withheld from the public in accordance with the provisions of 5 U.S.C. 552, will be available for Web site viewing and printing in the Commission's Public Reference Room, 100 F Street NE., Washington, DC 20549, on official business days between the hours of 10:00 a.m. and 3:00 p.m. Copies of the filing also will be available for inspection and copying at the principal office of the Exchange. All comments received will be posted without change; the Commission does not edit personal identifying information from submissions. You should submit only information that you wish to make available publicly. All submissions should refer to File Number SR–NYSE–2012–60 and should be submitted on or before December 11, 2012.

For the Commission, by the Division of Trading and Markets, pursuant to delegated authority.[24]

Kevin M. O'Neill,

Deputy Secretary.

[FR Doc. 2012–28136 Filed 11–19–12; 8:45 am]

BILLING CODE 8011–01–P

[24] 17 CFR 200.30–3(a)(12).

SMALL BUSINESS ADMINISTRATION

[Disaster Declaration # 13350 and # 13351]

Florida Disaster Number FL–00076

AGENCY: U.S. Small Business Administration.

ACTION: Amendment 1.

SUMMARY: This is an amendment of the Presidential declaration of a major disaster for Public Assistance Only for the State of Florida (FEMA–4084–DR), dated 10/18/2012.

Incident: Hurricane Isaac.

Incident Period: 08/27/2012 through 08/29/2012.

Effective Date: 11/07/2012.

Physical Loan Application Deadline Date: 12/17/2012.

Economic Injury (EIDL) Loan Application Deadline Date: 07/16/2013.

ADDRESSES: Submit completed loan applications to: U.S. Small Business Administration, Processing and Disbursement Center, 14925 Kingsport Road, Fort Worth, TX 76155.

FOR FURTHER INFORMATION CONTACT: A. Escobar, Office of Disaster Assistance, U.S. Small Business Administration, 409 3rd Street SW., Suite 6050, Washington, DC 20416.

SUPPLEMENTARY INFORMATION: The notice of the President's major disaster declaration for Private Non-Profit organizations in the State of FLORIDA, dated 10/18/2012, is hereby amended to include the following areas as adversely affected by the disaster.

Primary Counties: Glades.

All other information in the original declaration remains unchanged.

(Catalog of Federal Domestic Assistance Numbers 59002 and 59008)

James E. Rivera,

Associate Administrator for Disaster Assistance.

[FR Doc. 2012–28248 Filed 11–19–12; 8:45 am]

BILLING CODE 8025–01–P

SMALL BUSINESS ADMINISTRATION

[Disaster Declaration #13382 and #13383]

North Carolina Disaster #NC–00046

AGENCY: U.S. Small Business Administration.

ACTION: Notice.

SUMMARY: This is a notice of an Administrative declaration of a disaster for the State of North Carolina dated 11/08/2012.

Incident: Hurricane Sandy.

Incident Period: 10/27/2012 through 10/30/2012.

Effective Date: 11/08/2012.

Physical Loan Application Deadline Date: 01/07/2013.

Economic Injury (EIDL) Loan Application Deadline Date: 08/08/2013.

ADDRESSES: Submit completed loan applications to: U.S. Small Business Administration, Processing and Disbursement Center, 14925 Kingsport Road, Fort Worth, TX 76155.

FOR FURTHER INFORMATION CONTACT: A. Escobar, Office of Disaster Assistance, U.S. Small Business Administration, 409 3rd Street SW., Suite 6050, Washington, DC 20416.

SUPPLEMENTARY INFORMATION: Notice is hereby given that as a result of the Administrator's disaster declaration, applications for disaster loans may be filed at the address listed above or other locally announced locations.

The following areas have been determined to be adversely affected by the disaster:

Primary Counties: Dare.

Contiguous Counties:

North Carolina: Currituck; Hyde; Tyrrell.

The Interest Rates are:

	Percent
For Physical Damage:	
Homeowners With Credit Available Elsewhere	3.375
Homeowners Without Credit Available Elsewhere	1.688
Businesses With Credit Available Elsewhere	6.000
Businesses Without Credit Available Elsewhere	4.000
Non-Profit Organizations With Credit Available Elsewhere	3.125
Non-Profit Organizations Without Credit Available Elsewhere	3.000
For Economic Injury:	
Businesses & Small Agricultural Cooperatives Without Credit Available Elsewhere	4.000
Non-Profit Organizations Without Credit Available Elsewhere	3.000

The number assigned to this disaster for physical damage is 133828 and for economic injury is 133830.

The State which received an EIDL Declaration # is North Carolina.

(Catalog of Federal Domestic Assistance Numbers 59002 and 59008)

Dated: November 8, 2012.

Karen G. Mills,

Administrator.

[FR Doc. 2012–28256 Filed 11–19–12; 8:45 am]

BILLING CODE 8025–01–P

DEPARTMENT OF TRANSPORTATION

Office of the Secretary

Guidance on Review and Approval of Public Charter Prospectuses

AGENCY: Office of the Secretary, Department of Transportation.

ACTION: Guidance on Review and Approval of Public Charter Prospectuses.

SUMMARY: The Department is publishing the following notice on new policies affecting the review and approval of public charter filings under 14 CFR Part 380 and related changes in the Department's enforcement policies.

FOR FURTHER INFORMATION CONTACT: Nicholas Lowry, Attorney, Office of Aviation Enforcement and Proceedings (C–70), 1200 New Jersey Ave. SE., Washington, DC 20590, (202) 366–9349.

DEPARTMENT OF TRANSPORTATION

Office of the Secretary

Washington, DC

Guidance on Review and Approval of Public Charter Prospectuses

Notice

The abrupt cessation of service by the public charter operator, Southern Sky Air & Tours, LLC d/b/a Direct Air, in March 2012, and its subsequent bankruptcy, resulted in the cancellation of numerous charter flights and disrupted the travel plans of thousands of consumers. In light of the Direct Air collapse, the Office of International Aviation's Special Authorities Division, in conjunction with the Office of Aviation Enforcement and Proceedings (Enforcement Office), has revised its policies regarding the review and approval of public charter prospectuses filed under 14 CFR Part 380 and the related enforcement policy.

A number of practices followed by Direct Air may have exacerbated consumer harm. Among these were Direct Air's contracting out of its reservations process to a third party, and its entry into direct air carrier contracts that were apparently limited to providing aircraft, crew, maintenance and insurance (ACMI). The public charter operator separately contracted on its own behalf directly with fuel suppliers and perhaps ground handlers. In addition, the charter operator collected consumer funds, accepting debit as well as credit card payments, through a voucher program in which consumers paid in advance for flights without selecting specific travel dates and without entering into the formal operator-participant contracts required by Part 380.

In the future, pursuant to the public interest responsibilities we have under 14 CFR 380.24, we will no longer approve public charter prospectus filings that do not, as part of the filings, contain:

(1) A statement, in addition to that required under section 380.28(a)(1)(iii), confirming that the contracts between the public charter operator and the direct air carriers include the full cost of the direct air service; that is, contracts between the tour operator and the direct air carriers must be all-inclusive and cannot be ACMI (i.e., fuel or ground handling cannot be addressed in separate contracts between the public charter operator and a third-party vendor); and

(2) A statement that the public charter operator will retain direct control of all passenger reservation records and will share those records with the direct air carrier to ensure that, in the event of a major disruption in the program as occurred with Direct Air, the direct air carrier would be able to identify and contact tour participants regarding returning flights, and to ensure that the charter operator can fulfill its obligation to provide appropriate cancellation notices to those with reservations more than 10 days in the future; if a public charter operator contracts with a third-party for reservations service, a duplicate, current copy of all reservations records must be accessible to the tour operator at all times.

In addition, to ensure that consumers not paying in cash receive the protections of the Fair Credit Billing Act (15 U.S.C. 1601 et seq.), public charter operators may accept payment, as the explicit language of section 380.31 currently provides, only by credit card, but not by debit card.[1] The Department will consider exemptions to this requirement provided it can be assured that debit card issuers, their merchant

[1] In a future rulemaking, the Department may address the use of debit cards in purchasing charter air transportation.

banks and credit card/debit card processors, will provide the same chargeback protections to those using debit cards as credit card users receive under the Fair Credit Billing Act.

Finally, as a matter of enforcement policy, the Enforcement Office will consider any voucher program such as that offered by Direct Air a *per se* violation of 14 CFR Part 380, and if that office discovers such a program it will pursue immediate enforcement action. A voucher program that accepts consumer funds without the consumer entering into a contract with specific flight dates is not the equivalent of the operator-participant contract required under Part 380 and does not provide protection of consumer funds under the escrow provisions of section 380.34.

This revised policy regarding approval of charter prospectuses will take effect 30 days from the date of this notice. Prospectuses filed after that date will not be accepted without the supplemental statements, outlined above. The Enforcement Office intends to undertake enforcement action, where appropriate, if it obtains evidence of violations of commitments made in those statements, or of the acceptance of debit purchases, or of sales initiatives such as the voucher program described above. Questions regarding this notice may be addressed to the Office of Aviation Enforcement and Proceedings (C–70), 1200 New Jersey Avenue SE., Washington, DC 20590.

An electronic version of this document is available at http://www.regulations.gov

Dated: November 13, 2012.

Paul L. Gretch,

Director, Office of International Aviation.

Samuel Podberesky,

Assistant General Counsel for Aviation Enforcement and Proceedings.

[FR Doc. 2012–28060 Filed 11–19–12; 8:45 am]

BILLING CODE P

DEPARTMENT OF THE TREASURY

Submission for OMB Review; Comment Request

November 14, 2012.

The Department of the Treasury will submit the following information collection request to the Office of Management and Budget (OMB) for review and clearance in accordance with the Paperwork Reduction Act of 1995, Public Law 104–13, on or after the date of publication of this notice.

DATES: Comments should be received on or before December 20, 2012 to be assured of consideration.

ADDRESSES: Send comments regarding the burden estimate, or any other aspect of the information collection, including suggestion for reducing the burden, to (1) Office of Information and Regulatory Affairs, Office of Management and Budget, Attention: Desk Officer for Treasury, New Executive Office Building, Room 10235, Washington, DC 20503, or email at *OIRA_Submission@OMB.EOP.GOV* and (2) Treasury PRA Clearance Officer, 1750 Pennsylvania Ave. NW., Suite 8140, Washington, DC 20220, or email at *PRA@treasury.gov.*

FOR FURTHER INFORMATION CONTACT: Copies of the submission(s) may be obtained by calling (202) 927–5331, email at *PRA@treasury.gov,* or the entire information collection request maybe found at *www.reginfo.gov.*

SUPPLEMENTARY INFORMATION:

Title: Generic Clearances for Meaningful Access Information Collections.

OMB Control Number: NEW.

Abstract: A court order was issued in *American Council of the Blind* v. *Paulson,* 591 F. Supp. 2d 1 (D.D.C. 2008) (''*ACB* v. *Paulson*'') requiring the Department of the Treasury and BEP to ''provide meaningful access to United States currency for blind and other visually impaired persons, which steps shall be completed, in connection with each denomination of currency, not later than the date when a redesign of that denomination is next approved by the Secretary of the Treasury * * *.''

In compliance with the court's order, BEP intends to meet individually with blind and visually impaired persons and request their feedback about tactile features that BEP is considering for possible incorporation into the next U.S. paper currency redesign. BEP employees will attend national conventions and conferences for disabled persons. At those gatherings, BEP employees will invite blind and visually impaired persons to provide feedback about certain tactile features being considered for inclusion in future United States currency paper designs.

The BEP also intends to contract with specialists in the field of visual acuity to develop methodologies for conducting scientific tests. Using those methodologies, the BEP or its contracted specialists will conduct acuity testing with select groups of blind and visually impaired volunteers. The acuity tests will help either confirm or provide other perspectives on the results of BEP's information collections at national conferences and conventions. The acuity tests will also help ground bases for which BEP determines the tactile feature to be incorporated into the next United States paper currency design.

The BEP's information collection activities at national conferences will use identical methodologies or otherwise share a common element. Similarly, the BEP's scientific studies will use very similar methodologies or share a common element. Thus the BEP, in order to comply with the court's order in *ACB* v. *Paulson* requests OMB approval for two generic clearances to conduct various information collection activities. Over the next three years, the BEP anticipates undertaking a variety of new information collection activities related to BEP's efforts to provide meaningful access to U.S. paper currency for blind and visually impaired persons. Following standard OMB requirements, for each information collection that BEP proposes to undertake under each of these generic clearances, the OMB will be notified at least two weeks in advance and provided with a copy of the information collection instrument along with supportive materials. The BEP will only undertake a new collection if the OMB does not object to the BEP's proposal.

Type of Review: New Collection.

Affected Public: Individuals, Organizations.

Respondent's Obligation: Voluntary.

Estimated Number of Respondents: Approximately 500 per year. The BEP will conduct the majority of its information collection activities at conferences and conventions of organizations of blind and visually impaired persons. The BEP is able to estimate the number of attendees at such conferences and meetings based on historical data. The BEP, however, only collects information from volunteers who stop by its information booth, and who care to take the time responding to questions. It is difficult, therefore, to estimate the actual number of respondents from whom BEP may be able to collect information in a year. The BEP's scientific studies may include more focused sample sizes, comprised of persons volunteering to participate in the studies.

Estimated Average Time per Respondent: 30 minutes per response.

Estimated Total Annual Burden Hours: Approximately 250 burden hours.

Request for Comments: Comments submitted in response to this notice will be summarized and/or included in the request for Office of Management and Budget approval. All comments will become a matter of public record. The public is invited to submit written comments concerning: (a) Whether the

collection of information is necessary for the proper performance of the functions of the Bureau, including whether the information will have practical uses; (b) the accuracy of the above estimate of the burden of the proposed information collection; (c) ways to enhance the quality, usefulness, and clarity of the information to be collected; and (d) ways to minimize the reporting burdens on respondents, including the use of automated collection techniques or other forms of information technology.

Treasury Department PRA Clearance Officer: Robert Dahl, Department of the Treasury, Room 11000, 1750 Pennsylvania Avenue NW., Washington, DC 20220.

BEP Contact: Sonya White, Deputy Chief Counsel, United States Department of the Treasury, Bureau of Engraving and Printing, Room 419–A, 14th and C Streets SW., Washington, DC 20228.

Robert Dahl,

Treasury Department PRA Clearance Officer.

[FR Doc. 2012–28112 Filed 11–19–12; 8:45 am]

BILLING CODE 4810–25–P

DEPARTMENT OF THE TREASURY

Determination of Foreign Exchange Swaps and Foreign Exchange Forwards Under the Commodity Exchange Act

AGENCY: Department of the Treasury, Departmental Offices.

ACTION: Final determination.

SUMMARY: The Commodity Exchange Act (''CEA''), as amended by Title VII of the Dodd-Frank Wall Street Reform and Consumer Protection Act (''Dodd-Frank Act''), authorizes the Secretary of the Treasury (''Secretary'') to issue a written determination that foreign exchange swaps, foreign exchange forwards, or both, should not be regulated as swaps under the CEA. The Secretary is issuing a determination that exempts both foreign exchange swaps and foreign exchange forwards from the definition of ''swap,'' in accordance with the applicable provisions of the CEA.

DATES: Effective November 20, 2012.

FOR FURTHER INFORMATION CONTACT: Office of Financial Markets, 1500 Pennsylvania Avenue NW., Washington, DC 20220, (202) 622–2000; Thomas E. Scanlon, Office of the General Counsel, 1500 Pennsylvania Avenue NW., Washington, DC 20220, (202) 622–8170.

SUPPLEMENTARY INFORMATION: Title VII of the Dodd-Frank Act [1] amends the CEA, as well as Federal securities laws, to provide a comprehensive regulatory regime for swaps. Section 721 of the Dodd-Frank Act amends section 1a of the CEA, which, in relevant part, defines the term ''swap'' and includes foreign exchange swaps and foreign exchange forwards in the definition.[2] Section 1a(47)(E) of the CEA authorizes the Secretary to make a written determination that ''foreign exchange swaps'' [3] or ''foreign exchange forwards,'' [4] or both— (I) should not be regulated as swaps under the CEA; and (II) are not structured to evade the Dodd-Frank Act in violation of any rule promulgated by the Commodity Futures Trading Commission (''CFTC'') pursuant to section 721(c) of the Dodd-Frank Act.[5]

On October 28, 2010, the Department of the Treasury (''Treasury'') published in the **Federal Register** a Notice and Request for Comments (''October 2010 Notice'') to solicit public comment on a wide range of issues relating to whether foreign exchange swaps and foreign exchange forwards should be exempt from the definition of the term ''swap'' under the CEA.[6]

On May 5, 2011, Treasury published a notice of proposed determination (''NPD'') seeking comment on a proposed determination that would exempt both foreign exchange swaps and foreign exchange forwards from the definition of ''swap,'' as well as on the factors that would support such a determination.

In addition, Treasury staff has engaged in a broad outreach to representatives from multiple market segments, as well as market regulators and the Federal regulatory agencies. After assessing the comments in response to the October 2010 Notice and the NPD, consulting with Federal regulators, and considering the factors set forth in section 1b(a) of the CEA, as discussed below, the Secretary finds that a determination pursuant to sections 1a(47)(E) and 1b that ''foreign exchange swaps'' and ''foreign exchange forwards'' should not be regulated as swaps under the CEA, and therefore should be exempted from the definition of the term ''swap'' under the CEA, is appropriate.

In making a determination pursuant to sections 1a(47)(E) and 1b of the CEA, the Secretary must consider, and has considered, the following factors:

(1) Whether the required trading and clearing of foreign exchange swaps and foreign exchange forwards would create systemic risk, lower transparency, or threaten the financial stability of the United States;

(2) Whether foreign exchange swaps and foreign exchange forwards are already subject to a regulatory scheme that is materially comparable to that established by the CEA for other classes of swaps;

(3) The extent to which bank regulators of participants in the foreign exchange market provide adequate supervision, including capital and margin requirements;

(4) The extent of adequate payment and settlement systems; and

(5) The use of a potential exemption of foreign exchange swaps and foreign exchange forwards to evade otherwise applicable regulatory requirements.[7]

I. Summary of Final Determination

The CEA, as amended by the Dodd-Frank Act, provides a comprehensive regulatory regime for swaps and derivatives, including a wide range of foreign exchange derivatives, such as foreign exchange options, currency swaps, or non-deliverable forwards (''NDFs''). Among other measures, this regulatory regime provides for clearing and exchange-trading requirements that are designed to mitigate risks, promote price transparency, and facilitate more stable, liquid markets for derivative instruments.

In general, swaps, including foreign exchange derivatives, carry three types of risks: (i) Counterparty credit risk prior to settlement; (ii) market risk; and (iii) settlement risk. Counterparty credit risk prior to settlement is the risk that a party to the transaction potentially could default prior to the settlement date, which could result in the non-defaulting party suffering an economic loss associated with having to replace the defaulted contract with another transaction at the then-current terms.

[1] Public Law 111–203, title VII.

[2] 7 U.S.C. 1a(47).

[3] 7 U.S.C. 1a(25).

[4] 7 U.S.C. 1a(24).

[5] 7 U.S.C. 1(a)(47)(E)(i).

[6] 75 FR 66,426 (Oct. 28, 2010). Thirty comments were submitted in response to the October 2010 Notice.

[7] 7 U.S.C. 1b(a). In addition, section 1b(b) of the CEA provides that, ''[i]f the Secretary makes a determination to exempt foreign exchange swaps and foreign exchange forwards from the definition of the term 'swap','' the Secretary must submit a separate ''determination'' to the appropriate committees of Congress, which contains (1) an explanation as to why foreign exchange swaps and foreign exchange forwards are ''qualitatively different from other classes of swaps'' such that foreign exchange swaps and foreign exchange forwards are ''ill-suited for regulation as swaps'' and (2) an ''identification of the objective differences of foreign exchange swaps and foreign exchange forwards with respect to standard swaps that warrant an exempted status.'' The Secretary has submitted this determination to the appropriate committees of Congress, and, therefore, this determination is effective, pursuant to section 1a(47)(E)(ii) of the CEA.

Market risk is the risk that the value of the contract changes over the term of the transaction. In this context, market risk is intertwined with counterparty credit risk prior to settlement because the non-defaulting party (who thus bears the credit risk) also bears the risk that the value of the prior contract might have declined when that party seeks to replace the defaulted contract with another transaction. Settlement risk, particularly in the context of a foreign exchange swap or forward transaction, is the risk that the contract will not be settled in accordance with the initial terms, including when one party to the transaction delivers the currency it owes the counterparty, but does not receive the other currency from that counterparty.

The payment obligations on currency swaps, interest rate swaps, credit default swaps, commodity swaps and other derivatives fluctuate in response to changes in the value of the underlying variables on which those derivatives contracts are based. As a result, for most types of swaps, the full extent of the future payments to be exchanged is not known at the outset of the contract and is determined throughout the life of the contract. Moreover, as the term of a swap or derivative contract increases, a party generally is exposed to greater counterparty credit risk and market risk prior to settlement. Settlement of most types of swaps and derivatives involves only payments of net amounts that are based on the changes in the value of the variables underlying the derivatives contracts. Given the features of most swaps and derivatives, including some types of foreign exchange derivatives, the clearing and exchange-trading requirements under the CEA, where applicable, would mitigate the relevant risks, notably counterparty credit risks prior to settlement.

By contrast, foreign exchange swap and forward participants know their own and their counterparties' payment obligations and the full extent of their exposures at settlement throughout the life of the contract. Thus, while the mark-to-market value of a position in a foreign exchange swap or forward may vary based on changes in the exchange rate or interest rates, the actual settlement amounts do not.

Under the regulatory regime enacted by the Dodd-Frank Act, foreign exchange swaps and forwards generally are subject to the requirements of the CEA and, in particular, would be subject to central clearing and exchange trading,[8] unless the Secretary determines that foreign exchange swaps and forwards ''(I) should not be regulated as swaps under [the CEA]; and (II) are not structured to evade [the Dodd-Frank Act] in violation of any rules promulgated by the [CFTC] pursuant to section 721(c) of the [Dodd-Frank Act].'' [9]

Under the CEA, a ''foreign exchange swap'' is narrowly defined as ''a transaction that solely involves— (A) an exchange of 2 different currencies on a specific date at a fixed rate that is agreed upon on the inception of the contract covering the exchange'' and ''(B) a reverse exchange of [those two currencies] at a later date and at a fixed rate that is agreed upon on the inception of the contract covering the exchange.'' [10] Likewise, the CEA narrowly defines a ''foreign exchange forward'' as ''a transaction that solely involves the exchange of 2 different currencies on a specific future date at a fixed rate agreed upon on the inception of the contract covering the exchange.'' [11]

The Secretary's authority to issue a determination is limited to foreign exchange swaps and forwards and does not extend to other foreign exchange derivatives. Foreign exchange options, currency swaps, and NDFs (as discussed below) may not be exempted from the CEA's definition of ''swap'' because they do not satisfy the statutory definitions of a foreign exchange swap or forward.

After considering the statutory factors and the comments on the NPD, the Secretary is issuing this determination to exempt foreign exchange swaps and forwards because of the distinctive characteristics of these instruments. Unlike most other swaps, foreign exchange swaps and forwards have fixed payment obligations, are settled by the exchange of actual currency, and are predominantly short-term instruments.

Counterparty credit risk prior to settlement is significantly reduced by the structure of a foreign exchange swap or forward transaction, particularly because the term for each type of transaction generally is very short. For the vast majority of foreign exchange swap or forward contracts, the risk profile is centered on settlement risk. Settlement risk often is addressed in foreign exchange swaps and forwards through the use of payment-versus-payment (''PVP'') settlement arrangements,[12] particularly with large financial institutions.

Treasury believes, as do several commenters,[13] that requiring central clearing and trading under the CEA on foreign exchange swaps and forwards would potentially introduce operational risks and challenges to the current settlement process. If central clearing were to be required, the central clearing facility would be effectively guaranteeing both settlement and market exposure to replacement cost. As a result, combining clearing and settlement in a market that involves settlement of the full principal amounts of the contracts would require capital backing, in a very large number of currencies, well in excess of what will be required for swaps that are settled on a ''net'' basis. Treasury believes that requiring foreign exchange swaps and forwards to be cleared and settled through the use of new systems and technologies could introduce new, unforeseen risks in this market.

II. Overview of the Comments on the NPD

In response to the NPD, Treasury received 26 comment letters. Of these, 15 expressed support for the proposed determination, while 11 were generally opposed. Several commenters who support the proposed determination filed letters that incorporated by reference—as well as reconfirmed—statements and arguments they made in response to the October 2010 Notice.[14]

A. Comments Supporting Proposed Determination

Commenters who support issuing an exemption generally argue that foreign exchange swaps and forwards are functionally different from other over-the-counter (''OTC'') derivatives because foreign exchange swaps and forwards involve an actual exchange of principal, are predominantly very short in

[8] 7 U.S.C. 2(h)(1)–(2). In general, section 2(h)(1) of the CEA, as added by the Dodd-Frank Act, prohibits a person from engaging in a swap unless the person submits such swap for clearing to a derivatives clearing organization that is registered under the CEA if the CFTC requires the swap, or a category of swaps, to be cleared. 7 U.S.C. 2(h)(1). In addition, section 2(h)(8) of the CEA provides that any swap required to be cleared is subject to trade-execution requirements. 7 U.S.C. 2(h)(8). Pursuant to section 4s(e) of the CEA, uncleared swaps are subject to margin requirements under the CEA. 7 U.S.C. 6s(e). Thus, as a result of this determination pursuant to sections 1a(47)(E) and 1b of the CEA, foreign exchange swaps and forwards would not be subject to margin requirements under the CEA.

[9] 7 U.S.C. 1a(47)(E)(i).

[10] 7 U.S.C. 1a(25).

[11] 7 U.S.C. 1a(24).

[12] PVP settlement arrangements permit the final transfer of one currency to take place only if the final transfer of the other currency also takes place, thereby virtually eliminating settlement risk.

[13] *See, e.g.,* American Express Co., at 1; American Bankers Ass'n *et al.,* at 3; FX Investor Group, at 1; Global FX Division of SIFMA, *et al.* (''Global FX Division''), at 1–2.

[14] References made herein to the comment letters are to those submitted in response to the NPD, unless otherwise noted.

duration and have high turnover rates.[15] These commenters note that this market functions predominantly as a global payments market and is used significantly by end-users for hedging purposes.[16] Many corporate participants have expressed concern that the additional costs and operational difficulty associated with clearing foreign exchange swaps and forwards would adversely affect their business activities and discourage hedging activity.[17] Commenters also have cautioned that imposing mandatory clearing and exchange trading requirements on the foreign exchange market would increase systemic risk by concentrating risk in one or more clearinghouses.[18]

Commenters supporting the proposed determination argue that settlement risk is the primary risk associated with foreign exchange swaps and forwards, and they state that the settlement of trades through CLS Bank International (''CLS''), has largely addressed these concerns.[19, 20]

Given the particular characteristics of foreign exchange swaps and forwards, most commenters emphasize that counterparty credit risk is not as significant a risk for these transactions, relative to other derivative transactions, and that the widespread use of credit support annexes (''CSAs'') and standard ISDA documentation mitigates this risk.

Moreover, commenters who favor an exemption maintain that foreign exchange swaps and forwards generally trade in a highly liquid, efficient, and transparent inter-bank market that is characterized by a high degree of electronic trading.[21] The major participants in the foreign exchange swaps and forwards market predominantly are either depository institutions or affiliates of depository institutions, over which banking regulators have substantial visibility and exercise strong regulatory oversight. A few of these commenters also observe that the Federal Reserve Board has authority to craft appropriate regulations governing systemically important financial market utilities and payment, clearing, and settlement activities, as designated under Title VIII of the Dodd-Frank Act.[22]

B. Comments Opposing Proposed Determination

By contrast, commenters who urge Treasury not to issue a determination to exempt foreign exchange swaps and forwards, as proposed, criticize several aspects of Treasury's proposal. Some commenters who oppose an exemption for foreign exchange swaps and forwards raise a general concern that the exemption would create an ''enormous'' loophole, citing the large size of this market, as well as the lack of a fundamental economic difference, in their view, between foreign exchange swaps and forwards and other derivative products.[23] In light of the recent financial crisis, these commenters argue that such loopholes can play a significant role in undermining financial stability by preserving an opaque, unregulated and under-capitalized market. Opponents also express concerns that an exemption could be used to mask complex transactions in an effort to avoid subjecting them to clearing and trading requirements.[24]

One commenter, for example, contends that ''foreign exchange swaps and forwards have all of the relevant characteristics of other categories of derivatives that are subject to the clearing and exchange trading requirements of the Dodd-Frank Act,'' and states that the ''case for the exemption [presented in the NPD] is especially weak since the [NPD] concedes that many critical measures that support such an exemption simply do not exist.'' [25]

In addition, several commenters [26] contend that foreign exchange swap and forward contracts pose significant counterparty credit risk which, as one commenter states, arises precisely because these transactions entail fixed payment obligations.[27] In this regard, some commenters have outlined potential techniques, systems ''analogous to traditional central counterparty clearing'' [28] that, in their view, could be developed in order to conduct foreign exchange swap and forward transactions that can be subject to initial and variation margin payments designed to minimize the credit risk exposures to the parties.[29]

III. Analysis, Consideration of Statutory Factors, and Implications of Final Determination and Treatment of NDFs

A. Analysis of Why Foreign Exchange Swaps and Forwards Should Not Be Regulated as Swaps Under the CEA

(i) Foreign Exchange Swaps and Forwards Differ in Significant Ways From Other Classes of Swaps

Foreign exchange swaps and forwards are particular types of transactions that are qualitatively different from other classes of derivatives covered under the definition of ''swap'' in the CEA. The distinctive structural characteristics of foreign exchange swaps and forwards, particularly the certainty of payment amounts and shorter maturities, as well as the market characteristics of these instruments, merit different regulatory treatment pursuant to this determination. Moreover, largely due to the required exchange of principal amounts, foreign exchange swaps and forwards are not structured to evade the requirements of the Dodd-Frank Act or regulations prescribed by the CFTC.

First, foreign exchange swaps and forwards involve the actual exchange of the principal amounts of the two currencies in the contract (i.e., they are settled on a physical basis). Unlike many other derivative instruments whose payment obligations fluctuate frequently in response to changes in the value of the underlying variables on which those derivatives contracts are based, the payment obligations of foreign exchange swaps and foreign exchange forwards, as defined by the CEA, are fixed at the inception of the agreement and involve the exchange of full principal for settlement. A currency swap, also known as a cross-currency basis swap, differs significantly from a foreign exchange swap or forward because the actual amount of the cash flow exchanged by a party is unknown at the onset of the transaction; instead, in a currency swap, a payment obligation on either party is dependent on the fluctuation of one or more floating interest rates during the term of the transaction. As a result, the cash flows underlying the transaction can be

[15] *See, e.g.*, Alternative Investment Management Ass'n (''AIMA''), at 2; BlackRock, Inc., at 2.

[16] *See* comment on October 2010 Notice by 3M, Cargill Inc. *et al.,* at 2.

[17] *See* Coalition for Derivatives End-Users, at 2.

[18] *See, e.g.,* BlackRock, at 2; FX Alliance, Inc. (''FXall''), at 1.

[19] *See, e.g.,* comment on October 2010 Notice by Global FX Division, at 12–14; Global FX Division comment on NPD, at 3; Thomson Reuters, at 2.

[20] CLS, which began operations in September 2002 and is the predominant global PVP settlement system, currently provides settlement services for 17 currencies that represent 93 percent of the total daily value of foreign exchange swaps and forwards traded globally; *See* date and figures issued by CLS, available at *http://www.cls-group.com/About/Pages/History.aspx.*

[21] Thomson Reuters, at 2 (supporting Treasury's statement regarding the extent to which foreign exchange forwards trade on electronic platforms and noting that ''these figures rise steadily each year'').

[22] *See, e.g.,* BlackRock, Inc., at 2.

[23] Quantitative Investment Management, at 1; *see also, e.g.,* Council of Institutional Investors, at 1–2; Americans for Financial Reform, at 13.

[24] Americans for Financial Reform, at 13; Better Markets, Inc., at 11–13.

[25] Better Markets, Inc., at 2.

[26] *See, e.g.,* Duffie, at 3–5; Better Markets, Inc., at 14–15.

[27] Better Markets, Inc., at 14.

[28] Better Markets, at 17.

[29] Better Markets, Inc., at 16–19; Duffie at 5–9.

affected by market volatility or illiquidity. By contrast, foreign exchange swap and forward participants know their own and their counterparties' payment obligations and the full extent of their exposure at settlement throughout the life of the contract. Thus, while the mark-to-market value of a position in a foreign exchange swap or forward may vary based on changes in the exchange rate or interest rates, the actual settlement amounts do not. The requirement to exchange the full principal amounts of two different currencies qualitatively distinguishes foreign exchange swaps and forwards from other swaps, and contributes to a risk profile that is largely concentrated on settlement risk.

Second, foreign exchange swaps and forwards typically have much shorter maturities as compared to other derivatives. For example, interest rate swaps and credit default swaps generally have maturity terms between two and thirty years, and five to ten years, respectively.[30] In stark contrast, over 98 percent of foreign exchange swaps and forwards mature in less than one year, and 68 percent mature in less than one week.[31] BIS data since 1998, collected on a triennial basis, generally show that foreign exchange swaps and forwards consistently have had shorter maturities, in line with the current levels (*i.e.*, prior reports also show approximately 98 percent of these transactions maturing in less than one year, and approximately 68 percent maturing in less than one week).[32] Since counterparty credit risk increases as the term of a contract increases, foreign exchange swaps and forwards carry significantly lower levels of counterparty credit risk, relative to other swaps and derivatives. Correspondingly, the market risk associated with foreign exchange swaps and forwards is relatively lower because these transactions have shorter maturities.

Third, foreign exchange swaps and forwards are not structured to evade regulatory requirements that apply to other types of swaps. Rather, the uses of foreign exchange swaps and forwards are distinct from other swaps. Because of their unique structure and duration, as outlined above, foreign exchange swaps and forwards are predominantly used as a source of funding to hedge risk associated with short-term fluctuations in foreign currency values and to manage global cash-flow needs. For example, businesses that sell goods in international trade, or that make investments in foreign countries, frequently ask their banks to arrange foreign exchange swaps and forwards to control the risk that their own country's currency will rise or fall against the other country's currency while a sale or investment is pending.[33] Other derivatives, such as currency swaps or interest rate swaps, are used for a broader range of purposes. For example, a business that conducts transactions in several countries, each with a different currency, could use currency swaps to stabilize the value of its sales revenue (or costs), instead of actually obtaining those currencies to fund transactions to parties located in those countries. Likewise, a business that obtains a syndicated loan with a floating interest rate could use an interest rate swap to stabilize the level of its loan payments.

Fourth, foreign exchange swaps and forwards already trade in a highly transparent and liquid market. Market participants have access to readily available pricing information through multiple sources,[34] and one commenter noted that these developments have lowered transactions costs.[35] Today, it is estimated that approximately 41and 72 percent of foreign exchange swaps and forwards, respectively, already trade across a range of electronic platforms.[36] As a result, mandatory exchange trading requirements under the CEA would be unlikely to improve price transparency significantly. Additionally, the Depository Trust and Clearing Corporation (''DTCC'') has submitted an application to register with the CFTC as a swap data repository (''SDR''), and is testing a foreign exchange trade repository service through which DTCC intends to provide both public and regulatory reporting, as early as the first quarter of 2013.[37]

(ii) Settlement Risk Is the Main Risk and Is Effectively Mitigated Through Various Measures

As discussed above, counterparties to foreign exchange swaps and forwards face three distinct risks: (i) Counterparty credit risk prior to settlement; (ii) market risk; and (iii) settlement risk. Counterparty credit risk and market risk prior to settlement exist in foreign exchange swaps and forwards transactions, but the risk of economic loss largely is attributable to the fluctuating exchange rate or interest rate of the two currencies. For example, if a counterparty defaults on a foreign exchange forward prior to the settlement date (e.g., as a consequence of bankruptcy) and the exchange rate of the two specified currencies were to have moved during that period, the non-defaulting party would be exposed to market risk if that party were to be required to replace that contract (i.e., actually obtain the currency desired in the original forward contract) at a higher price.

Settlement risk, in the context of a foreign exchange swap or forward transaction, is the risk that the contract will not be settled in accordance with the initial terms, including when one party to the transaction delivers the currency it owes the counterparty, but does not receive the other currency due from that counterparty.

The key distinction between counterparty credit risk prior to settlement and settlement risk is that, with the latter, a party's failure to deliver a currency under a foreign exchange swap or forward agreement entails a risk to the non-defaulting party of the loss of principal as a result of the non-defaulting party's delivery of the underlying principal sum of currency under the agreement coupled with the other party's failure to deliver its required principal payment.

In contrast to other derivatives, including other foreign exchange derivatives, the parties' ultimate payment obligations on a foreign exchange swap or forward are known and fixed from the beginning of the contract and involve the actual ''exchange'' of a predetermined amount of principal at settlement.[38]

The distinguishing characteristics of foreign exchange swaps and forwards, as described above, result in a risk profile that is largely concentrated on

[30] Foreign Exchange Committee (''FXC''), comment on October 2010 Notice (''FXC Letter''), at 3.

[31] FXC Letter, at 3; FXJSC survey data; Bank for International Settlements (''BIS'') Triennial Central Bank Survey of Foreign Exchange and Derivatives Market Activity, available at *http://www.bis.org/publ/rpfxf10t.htm.*

[32] BIS Triennial Central Bank Survey of Foreign Exchange and Derivatives Market Activity, *available at http://www.bis.org/publ/rpfxf10t.htm.*

[33] AIMA, at 2.

[34] *See, e.g.,* comment on October 2010 Notice by Global FX Division of the Securities Industry and Financial Markets Ass'n, Association for Financial Markets in Europe, and the Asia Securities Industry and Financial Markets Ass'n (''Global FX Division''), at 11.

[35] Global FX Division, comment on NPD, at 2 (noting that these developments have ''resulted in tight spreads'').

[36] NPD, 76 FR at 25,777; BIS, Greenwich Associates, Oliver Wyman analysis.

[37] *See* DTCC release, ''DTCC Begins User Testing on Foreign Exchange Repository,'' May 3, 2012, available at *http://www.dtcc.com/news/press/releases/2012/press_release_dtcc_begins_user_testing.php.*

[38] By contrast, the payment obligations of most other derivatives occur on an interim basis (e.g., monthly or quarterly), based on the incremental profit or loss on a transaction and either party's payment may be made with a common currency.

settlement risk, rather than counterparty credit risk prior to settlement.

The foreign exchange swap and forward market relies on the extensive use of PVP settlement arrangements, which permit the final transfer of one currency to take place only if the final transfer of the other currency also takes place, thereby virtually eliminating settlement risk. Even though these settlement arrangements do not guarantee performance on the contract, they do prevent principal payment flows from occurring if either party defaults.

As noted above, CLS, which began operations in September 2002 and is the predominant global PVP settlement system, currently provides settlement services for 17 currencies that represent 93 percent of the total daily value of foreign exchange swaps and forwards traded globally. CLS is a specialized settlement system that operates a multilateral PVP settlement system to reduce foreign exchange settlement risk (but not credit risk, which is mitigated by other measures). CLS estimates that it settles 68 percent of global foreign exchange trading, through 63 settlement member banks and approximately 15,000 third-party users.[39] In the foreign exchange swaps and forwards market in particular (exclusive of other transactions involving currencies), CLS estimates that it settles more than 50 percent of foreign exchange swap and forward transactions that are subject to settlement risk.

According to a September 2010 Foreign Exchange Committee (''FXC'') survey, roughly 75 percent of foreign exchange transactions are settled without settlement risk to either party.[40] This figure includes trades settled by CLS, settled between affiliates of the same corporation, and settled across a single bank's books for its clients. (Transactions that are internally settled between corporate affiliates, cash settled, or settled across a single-bank's books for its clients are not subject to settlement risk.) The extensive use of CLS and privately negotiated PVP settlement arrangements between banks, financial intermediaries, and their clients largely addresses settlement risk in the market for foreign exchange swaps and forwards, and, as a result, constitutes an important, objective difference between foreign exchange swaps and forwards and swaps that otherwise are subject to regulation under the CEA.[41]

(iii) Foreign Exchange Swaps and Forwards Are Subject to Less Counterparty Credit Risk Prior To Settlement Than Other Derivatives

Counterparty credit risk increases with the length of a contract because that increases the length of time during which a counterparty could suffer from adverse developments. Foreign exchange swap and forward contracts have a very short average length. As noted above, 68 percent of foreign exchange swap and forward contracts mature in less than a week, and 98 percent mature in less than a year. Other derivatives, such as interest rate swaps, generally have much longer maturity terms (*e.g.*, between two and thirty years) than foreign exchange swaps and forwards, and thus pose significantly more counterparty credit risk than foreign exchange swaps and forwards.[42]

Central clearing could provide foreign exchange swap and forward participants with protection against the risk of default by their counterparties (*i.e.,* the replacement cost of a transaction if a counterparty fails to perform). However, as noted in the NPD, imposing a central clearing requirement on the foreign exchange swaps and forwards market raises two concerns. First, requiring central clearing may lead to combining clearing and settlement in one facility, which would create large currency and capital needs for that entity due to: (i) The sheer size and volume of the foreign exchange swaps and forwards market; and (ii) the fact that the central clearing facility would be effectively guaranteeing both settlement and market exposure to replacement cost. Treasury believes that it is unlikely a central counterparty (''CCP'') would be able to provide the settlement services required by this market, either directly or in conjunction with another service provider, such as CLS.

Providing central clearing separately from settlement presents the second concern, namely: required clearing likely would disrupt the existing settlement process by introducing additional steps between trade execution and settlement that pose significant operational challenges. The existing settlement process for this market functions well and has been critical to mitigating this market's main source of risk. The operational challenges associated with the addition of a central clearing requirement, one that is very different from the core clearing functions currently handled by CCPs, and the potentially disruptive effects on transactions in the large market of foreign exchange swaps and forwards, outweigh the benefits that central clearing would provide, thus making these instruments ill-suited for regulation as swaps.

(iv) Foreign Exchange Swaps and Forwards Transacted by Banks in the Foreign Exchange Market Already Are Subject to Oversight

The foreign exchange market itself has long been subject to extensive and coordinated oversight, reflecting its unique characteristics and functioning. Since the introduction of floating exchange rates in the early 1970s, the largest central banks and regulators have undertaken strong and coordinated oversight measures for the foreign exchange market, given its critical role in monetary policy and the global payments system. This global strategy, led by the Committee on Payment and Settlement Systems (''CPSS''), resulted in the design and implementation of CLS and other PVP settlement arrangements. The Federal Reserve regularly conducts reviews of the risk management and operational processes of major foreign exchange market participants. These reviews inform Basel Committee on Banking Supervision (''BCBS'') and CPSS updates to bank supervisory guidelines on managing foreign exchange settlement risk.[43]

As referenced above, banks, affiliates in bank holding companies in the U.S., and banking organizations operating in other jurisdictions are the key players in the foreign exchange swaps and forwards market. Roughly 95 percent of foreign exchange swaps and forwards transactions occur between banks acting either on their own behalf or on behalf of their clients.[44] More specifically, the clients of banks that typically engage in foreign exchange swaps and forwards are companies, particularly multi-

[39] *See* figures issued by CLS, available at *http://www.cls-group.com/About/Pages/History.aspx.*

[40] FXC Letter, at 5. Formed in 1978 under the sponsorship of the Federal Reserve Bank of New York, the FXC is an industry group that produces best practice recommendations for the foreign exchange industry, addressing topics such as management of risk in operations and trading.

[41] Additionally, the vast majority of foreign exchange swap and forward transactions are transacted by well-capitalized and regulated financial institutions; the financial and operational safeguards used by these financial institutions mitigates the settlement risk that a counterparty otherwise would face in a foreign exchange swap or forward.

[42] As noted above, some commenters contend that counterparty credit risk ''remains a significant concern in the foreign exchange markets,'' even though ''non-crisis risk is more concentrated in longer-duration contracts.'' Better Markets, Inc., at 14–15.

[43] *See* Bank for Int'l Settlements, Supervisory guidance for managing risks associated with the settlement of foreign exchange transactions, (Aug. 2012), *available at http://www.bis.org/publ/bcbs229.htm.*

[44] American Bankers Ass'n *et al.,* at 1.

national corporations, that engage in cross-border investments or other commercial transactions that require payments in the local currency.[45] Banks are subject to ongoing consolidated supervision, and supervisors regularly monitor their foreign exchange related exposures, internal controls, risk management systems, and settlement practices.

(v) The Foreign Exchange Swaps and Forwards Market Already Is Highly Transparent and Traded Over Electronic Trading Platforms

Foreign exchange swaps and forwards already trade in a highly transparent market. Market participants have access to readily available pricing information through multiple sources. Approximately 41 percent and 72 percent of foreign exchange swaps and forwards, respectively, already trade across a range of electronic platforms and the use of such platforms has been steadily increasing in recent years.[46] The use of electronic trading platforms provides a high level of pre- and post-trade transparency within the foreign exchange swaps and forwards market.[47] Thus, mandatory exchange trading requirements would not significantly improve price transparency or reduce trading costs within this market.

(vi) Foreign Exchange Swaps and Forwards Will Be Subject to Oversight Under the CEA

The Secretary's determination that foreign exchange swaps and forwards should not be regulated as ''swaps'' under the CEA does not affect the application of relevant provisions of the CEA that are designed to prevent evasion and improve market transparency. Commenters who oppose an exemption argue that the exemption would create a large regulatory loophole that could exacerbate systemic risk.[48] However, all foreign exchange transactions would remain subject to the CFTC's new trade-reporting (but not the real-time reporting) requirements,[49] enhanced anti-evasion authority,[50] and strengthened business-conduct standards.[51] As noted above, the creation of a global foreign exchange trade repository, such as the SDR created by DTCC, will expand reporting to regulators and the public more broadly.

B. Statutory Considerations

In considering whether to exempt foreign exchange swaps and forwards from the definition of the term ''swap,'' the Secretary must consider, and has considered (including in light of the comments received), five factors, as follows.

(i) Systemic Risk, Transparency, Financial Stability

Treasury has considered several factors to assess whether the required trading and clearing of foreign exchange swaps and foreign exchange forwards would create systemic risk, lower transparency, or threaten the financial stability of the United States. As stated in the NPD, given the reduced counterparty credit risk profile of this market as compared to the markets for other swaps and derivatives, the logistical challenges of implementing central clearing within this market significantly outweigh the marginal benefits that central clearing and exchange trading might provide.

Several commenters have challenged Treasury's consideration of this statutory factor, contending, for example, that Treasury's proposed analysis regarding the ''operational challenges'' that would arise by interposing a CCP into the settlement process ''carries no weight under the statutory test.'' [52] One commenter offers its belief that ''exempting foreign exchange forwards and swaps at this time from the clearing and trading requirements of [the Dodd-Frank Act] could increase systemic risk at a time when regulators around the globe are trying to reduce it.'' [53]

Regulating foreign exchange swaps and forwards under the CEA would require insertion of a CCP into an already well-functioning settlement process. Currently, no entity or system exists that can efficiently clear and settle the thousands of foreign exchange swaps and forwards transactions that are executed on a daily basis, and Treasury is not aware of any proposal to build sufficient capabilities in this area. Requiring the use of new systems and technologies could introduce new risks and challenges for the settlement process of foreign exchange swaps and forwards. Other derivative transactions, such as interest rate swaps and credit default swaps, create settlement obligations that equal only the change in the market price or other financial variable relative to a fixed or predefined amount—not the full principal amounts—and, thus, result in materially smaller daily payment obligations for those markets. While the existing CLS and other PVP settlement systems protect against the risk of principal loss in the foreign exchange swaps and forwards market, central clearing would further protect a participant against the economic loss of profit on a transaction if the counterparty to the transaction defaults before final settlement. However, combining these two functions in a market that involves settlement of the full principal amounts

[45] For example, a U.S.-based company seeking to acquire specialized brewery equipment from a manufacturer in Germany could agree to pay for the purchase in euros, on a specified future date (e.g., the delivery date of the equipment). If the U.S.-based company needs to fix its payment of euros based on the current exchange rate (to control the risk that the price of the euro will rise while the sale is pending), then the company could enter into a foreign exchange forward with its bank under which, on the specified date, (i) the company would deliver the dollars to its bank and (ii) the bank would deliver the euros to the company, payable to the manufacturer.

[46] BIS, Greenwich Associates, Oliver Wyman analysis.

[47] American Bankers Ass'n *et al.,* at 3.

[48] For example, Better Markets, Inc., at 3, states: ''[Exchange-trading and clearing systems] offer the only feasible way to create a marketplace that is relatively free from the [information] asymmetry that can convert inevitable market disturbances into catastrophes. An exemption for the large and diverse foreign exchange market undercuts that essential goal.''

[49] 7 U.S.C. 1a(47)(E)(iii). *See also* Swap Data Recordkeeping and Reporting Requirements, 77 FR 2136 (Jan. 13, 2012); Swap Data Recordkeeping and Reporting Requirements: Pre-Enactment and Transition Swaps, 77 FR 35200 (June 12, 2012).

[50] *See* note 77, infra.

[51] 7 U.S.C. 1a(47)(E)(iv). *See also* Business Conduct Standards for Swap Dealers and Major Swap Participants with Counterparties, 77 FR 9734 (Feb. 17, 2012); Swap Dealer and Major Swap Participant Recordkeeping, Reporting, and Duties Rules; Futures Commission Merchant and Introducing Broker Conflicts of Interest Rules; and Chief Compliance Officer Rules for Swap Dealers, Major Swap Participants, and Futures Commission Merchants, 77 FR 20128 (Apr. 3, 2012); Confirmation, Portfolio Reconciliation, Portfolio Compression, and Swap Trading Relationship Documentation Requirements for Swap Dealers and Major Swap Participants, 77 FR 55904 (Sept. 11, 2012).

[52] Better Markets, Inc., at 8. Separately, Americans for Financial Reform (''AFR'') contends that, under section 721 of the Dodd-Frank Act, ''Treasury must present an actual independent analysis which clearly demonstrates that this risk is not significant.'' AFR, at 8. Sections 1a(47)(E) and 1b of the CEA do not require Treasury to conduct an ''independent'' analysis of each of the statutory factors, as AFR contends. Rather, section 1b(a) of the CEA plainly requires the Secretary to ''consider'' each of the five factors, and does not contain any provision that suggests that any one or more of those factors may be pivotal in reaching any determination. Furthermore, subsection 1b(b) of the CEA requires the Secretary to ''submit to the appropriate committees of Congress a determination that contains—(1) an explanation [regarding qualitative differences between foreign exchange swaps and forwards and other classes of swaps]; and (2) an identification of the objective differences of foreign exchange swaps and foreign exchange forwards with respect to standard swaps that warrant an exempted status.'' A ''determination'' that explains those ''qualitative'' differences and identifies those ''objective'' differences satisfies the law; neither subsection 1b(b)(1) or 1b(b)(2) requires Treasury to conduct an ''independent'' analysis of the type that AFR describes in its comment letter.

[53] Commodity Markets Council, at 1–2.

of the contracts would require massive capital backing in a very large number of currencies, representing a much greater commitment for a potential CCP in the foreign exchange swaps and forwards market than for any other type of derivatives market.

The CPSS and the Technical Committee of the International Organization of Securities Commissions (''IOSCO'') recently issued principles for financial market infrastructures (''FMIs'') (herein ''FMI Principles'') that highlight the close connection between clearing systems and settlement systems.[54] The FMI Principles are intended to apply to several types of FMIs, including a CCP, and establish heightened risk-management standards for the relevant FMIs in the jurisdictions of the CPSS–IOSCO members.[55] In particular, the FMI Principles state:

> An FMI's processes should be designed to complete final settlement, at a minimum no later than the end of the value date. This means that any payment, transfer instruction, or other obligation that has been submitted to and accepted by an FMI in accordance with its risk management and other relevant acceptance criteria should be settled on the intended value date. An FMI that is not designed to provide final settlement on the value date (or same-day settlement) would not satisfy this principle, even if the transaction's settlement date is adjusted back to the value date after settlement * * *. [D]eferral of final settlement to the next-business day can entail overnight risk exposures. For example, if a [central securities depository] or CCP conducts its money settlements using instruments or arrangements that involve next-day settlement, a participant's default on its settlement obligations between the initiation and finality of settlement could pose significant credit and liquidity risks to the FMI and its other participants.[56]

Consistent with the FMI Principles, considering whether the required clearing for foreign exchange swaps and forwards would create systemic risk, pursuant to section 1b(a)(1) of the CEA, entails considering whether the required clearing can prudently be undertaken in conjunction with the settlement systems necessary for the foreign exchange swaps and forwards market.

To date, no CCP has developed a practical solution to guarantee the timely settlement of the payment obligations of the extraordinarily large volumes of transactions in foreign exchange swaps and forwards, including the provision of or coordination with the settlement services that are essential to the market.[57] Introducing a central clearing facility without settlement capabilities would be inconsistent with the standards being developed by regulators through CPSS–IOSCO, and would not improve market functioning. Instead, requiring central clearing would raise unnecessary operational challenges by introducing additional steps between trade execution and settlement. Given that any risks created through the increased complexity would be magnified by the number of currencies involved, among other factors, requiring the use of a CCP for clearing foreign exchange swaps and forwards is not warranted.

In response to the October 2010 Notice, end-users of foreign exchange swaps and forwards have expressed significant concern that requiring centralized clearing would substantially increase the costs of hedging foreign exchange risks. Commenters argue that additional costs associated with collateral, margin, and capital requirements required by the CCP would potentially reduce their incentives to manage foreign exchange risks.[58] Such additional costs borne by non-financial end-users could lead to lower cash flows or earnings, which would divert financial resources from investment and discourage international trade, thereby limiting the growth of U.S. businesses.[59] Several commenters also suggest that requiring centralized clearing of foreign exchange swaps and forwards could lead non-financial end-users to move production facilities overseas in order to establish ''natural hedges'' through the consistent use of local currencies and force them to reconsider the use of CLS in light of the additional costs associated with central clearing.[60]

As noted above, the market for foreign exchange transactions is one of the most transparent and liquid global trading markets. Pricing is readily available through multiple sources and a large portion of foreign exchange trades currently are executed through electronic trading platforms.[61]

In light of these and similar factors raised by the commenters, mandating centralized clearing and exchange trading under the CEA for foreign exchange swaps and foreign exchange forwards would actually introduce operational challenges. These challenges and risks could potentially lead to disruptive effects in this market which likely would outweigh any benefits associated with mandated clearing and exchange trading.[62]

---

[54] Bank for Int'l Settlements, ''Principles for financial market infrastructures,'' Apr. 2012, available at *http://www.bis.org/publ/cpss101a.pdf.* The FMI Principles were issued following a proposal, issued in April 2011, and public comment. The Federal Reserve Board and the Federal Reserve Bank of New York are members of the CPSS, and the CFTC and Securities and Exchange Commission (''SEC'') are members of the Technical Committee of IOSCO. Treasury expects that the FMI Principles will be applied through rules and regulatory guidance issued, as appropriate, by the Federal agencies that supervise the relevant FMIs which are subject to their jurisdiction. Accordingly, Treasury believes that the FMI Principles reasonably should be taken into account with respect to the consideration of clearing and settlement systems for foreign exchange swaps and forwards.

[55] FMI Principles, at 5–7, 12.

[56] FMI Principles, at 65.

[57] In addition, even though a few commenters have outlined mechanisms for clearing foreign exchange swaps and forwards, none of these mechanisms clearly contemplate a system for clearing that would also settle those foreign exchange swaps and forwards, particularly given the scale and complexity for physical settlement of multiple currencies in the current market for foreign exchange swaps and forwards. *See, e.g.,* Better Markets, Inc., at 16–19 (This commenter outlines two mechanisms for clearing involving the use of a derivatives clearing organization (''DCO''). Under one option, the DCO apparently would conduct both the clearing and settlement functions (but the outline does not describe how the DCO itself would establish the systems necessary to settle the massive volume of currencies flowing through the foreign exchange swaps and forwards contracts); the second option stipulates that the DCO would clear transactions, but settlement would be conducted through ''CLS or a similar institution [that is] a PVP provider'' or through an alternative mechanism.); Duffie, at 7–9 (outlining a scheme using a ''financial utility'' that operates as a ''quasi-CCP,'' only to compute and collect margin payments, and that operates independently of, yet coordinated with, a PVP provider (such as CLS), which settles the foreign exchange swaps and forwards).

[58] *See, e.g.,* comment on October 2010 Notice by National Ass'n of Manufacturers, at 4.

[59] *See, e.g.,* comment on October 2010 Notice by 3M, Cargill Inc. *et al.,* at 6.

[60] *See, e.g.,* comment on October 2010 Notice by Coalition for Derivatives End-Users, at 16–17.

[61] *See, e.g.,* comment on NPD by Coalition for Derivatives End-Users, at 1–2 (''[T]he [foreign exchange] market has pioneered the adoption of more transparent electronic trading platforms. Because the market is highly liquid and decentralized, liquidity can exist more easily on multiple electronic platforms and pricing transparency is more readily available. Applying the clearing and exchange trading requirements to these transactions would not improve pricing transparency to any notable degree.'').

Furthermore, Treasury understands that at least one global foreign exchange trading repository has been created pursuant to section 21 of the CEA (7 U.S.C. 24a, as added by section 728 of the Dodd-Frank Act), which will expand reporting coverage for swaps, including foreign exchange swaps and forwards, regardless of whether the Secretary issues a determination that these transactions should not be regulated as ''swaps'' under the CEA. *See* DTCC release, available at *http://www.dtcc.com/news/press/releases/2012/press_release_dtcc_begins_user_testing.php.* The CFTC has adopted final rules relating to the registration and regulation of SDRs. 17 CFR Part 49. *See* CFTC, Final Rule on Swap Data Repositories: Registration Standards, Duties, and Core Principles, 76 FR 5453 (Sept. 1, 2011)).

[62] *See also* comment by FXall, at 1.

(ii) Regulatory Scheme Comparable to That of the CEA

Treasury has considered several factors to assess whether foreign exchange swaps and foreign exchange forwards are already subject to a regulatory scheme that is materially comparable to that established by the CEA for other classes of swaps.

One commenter has noted that foreign exchange swaps and forwards will not fall outside of the scope of regulatory oversight under the CEA; ''[o]n the contrary, foreign exchange swaps and forwards will be required to be reported to swap data repositories and regulated swaps market actors (i.e., swap dealers and major swap participants) will be required to comply with applicable conduct of business rules when engaging in foreign exchange swaps and forwards transactions.'' [63] Other commenters, however, have stated that currently there is no ''regulatory regime'' that is ''comparable to the framework mandated under the Dodd-Frank Act.'' [64]

Since the introduction of floating exchange rates in the early 1970s, central banks and regulators have undertaken strong and coordinated oversight measures for the foreign exchange market because of the critical role this market plays in the conduct of countries' monetary policy. More specifically, in 1996, the CPSS launched a globally coordinated strategy on behalf of central banks, calling for specific actions by individual banks, industry groups and central banks to address and reduce risk in the foreign exchange market. This strategy has resulted in specific actions undertaken to address settlement risk, to mitigate counterparty credit risk and, in conjunction with the BCBS, to develop global supervisory guidelines on managing foreign exchange risk. Largely as a result of these measures, liquidity in the foreign exchange market was maintained during the recent financial crisis, and, as noted by many market observers, the foreign exchange market was one of the few parts of the financial market that remained liquid throughout the financial crisis.[65]

One of the key goals of this work was to expand the use of PVP settlement systems. Such systems largely eliminate settlement risk, which is the predominant risk in a foreign exchange swap or forward. As noted, PVP settlement ensures that the final transfer of one currency occurs only if a final transfer of the other currency or currencies takes place, thereby virtually eliminating settlement risk. In order to support such PVP arrangements, central banks undertook significant actions by extending operating hours of payment systems, providing cross-border access to central bank accounts and enhancing the legal certainty around such settlement arrangements.

The creation of CLS was an important outcome of this work. CLS is the predominant PVP settlement system, settling the majority of all global foreign exchange transactions in 17 currencies, through 63 settlement member banks and approximately 15,000 third party users.

A comparable regulatory scheme applies to the settlement system conducted through CLS. While the Federal Reserve is the primary regulator for CLS, a CLS Oversight Committee [66] consisting of 22 central banks was established to provide coordinated oversight of CLS by all central banks whose currencies are settled through its system. As a result of this group's efforts, each participating central bank now maintains accounts for CLS and has created a window period during which real-time gross settlement systems are open to accommodate the funding necessary for the settlement of payment instructions. CLS also has developed a set of risk management tests that it applies to each instruction it submits for settlement to mitigate the associated credit, market and liquidity risks.

On July 18, 2012, the Financial Stability Oversight Council (''Council'') designated CLS as a financial market utility that is systemically important, pursuant to section 804 of the Dodd-Frank Act.[67] The designation of CLS by the Council subjects CLS to requirements under Title VIII of the Dodd-Frank Act, including risk-management standards, reporting and recordkeeping requirements, and examinations (as well as potential enforcement actions) by the Federal Reserve.

Participants in the foreign exchange swaps and forwards market largely consist of banks that are subject to prudential supervision, including comprehensive risk-management oversight. In addition, Treasury notes that the vast majority of established regulatory schemes also actively encourage the use of CSAs and master netting agreements to reduce counterparty credit risk exposures.[68] Similar to changes made to enable the use of PVP settlement arrangements, central banks and governments worked to strengthen the legal foundations of bilateral and multilateral netting. Master netting agreements mitigate credit risk by enabling closeout netting in the event of a default or bankruptcy. CSAs can also be negotiated as a supplement to master agreements to further reduce and mitigate exposures to counterparties by collateralizing transactions.

(iii) Adequacy of Supervision by Bank Regulators, Including Capital and Margin Requirements

Treasury has assessed the extent to which bank regulators supervise participants in the foreign exchange market, including by imposing capital and margin requirements.

The predominant participants in the foreign exchange swaps and forwards market are banks that long have been subject to prudential supervision. In fact, nearly all trading within the foreign exchange market involves bank counterparties.[69] Roughly 95 percent of foreign exchange trading involves banks acting in the capacity of either principal or agent. For a number of structural reasons, banks have distinct advantages to provide the liquidity and funding necessary to conduct foreign exchange swaps and forwards, which involve the exchange of principal, rather than just interim variable cash flows. In conjunction with providing the liquidity, funding, and foreign exchange risk-management needed to conduct these transactions, banks have efficient and ready access to CLS to settle transactions on a PVP basis. Prudential supervisors regularly monitor the activities, exposures, internal controls and risk management systems of these banks.[70] In order to meet safety-and-

[63] AIMA, at 2. *See also* Thomson Reuters, at 2 (commenting on the presence of ''enhanced oversight'').

[64] *See* Better Markets, at 8.

[65] *See, e.g.,* Global FX Division, at 11–12. *But see* Better Markets, Inc. at 19–28.

[66] Federal Reserve Board, ''Protocol for Cooperative Oversight Arrangement for CLS,'' Nov. 25, 2008, *available at http://www.federalreserve.gov/paymentsystems/cls_protocol.html.*

[67] 12 U.S.C. 5463; 12 CFR part 1320 (Designation of Financial Market Utilities).

[68] With respect to this factor, one commenter states that ''the 'encouraged' use of private contractual provisions is not a credible substitute for mandatory clearing mechanisms operated by entities that are registered and subject to a host of core principles covering virtually every aspect of a clearing operation.'' Better Markets, at 9.

[69] One commenter takes issue with this point, noting that while the ''vast majority of trading in foreign exchange swaps and forwards may involve banks,'' not all such transactions do. This commenter further argues that, in the absence of ''mandatory, uniform, and transparent margin requirements,'' there is ''an ad hoc assortment of voluntary 'banking' practices aimed at 'risk management.' '' Better Markets, at 10.

[70] *See, e.g.,* supervisory and examination standards for wholesale payments systems

Continued

soundness requirements, banks have implemented monitoring systems, limits, internal controls, hedging techniques, and similar risk-management measures. Furthermore, counterparty credit risk management is a fundamental issue for banking supervisors and is extensively addressed in bank supervisory guidelines as well as under the Basel Accords.

In addition to the supervisory measures discussed above, the OTC Derivatives Supervisors Group, which includes market and bank regulators from the U.S., France, Germany, Japan, Switzerland and the U.K., has been securing commitments from market participants since 2005 to strengthen market infrastructure, risk management practices, and transparency in the OTC derivatives market.

(iv) Adequacy of Payment and Settlement Systems

Treasury also has assessed the extent of adequate payment and settlement systems for foreign exchange swaps and forwards. With respect to this factor, as noted, the strategy developed by central banks successfully resulted in the establishment of PVP settlement systems to virtually eliminate the settlement risk associated with foreign exchange swaps and forwards, with CLS being the primary example of this work. Central banks undertook significant actions to support these robust PVP settlement arrangements. As a result, roughly 75 percent of notional foreign exchange is either settled through CLS or otherwise settled without risk, including trades that are settled between affiliates of the same corporation or across a single bank's books for its clients.[71] In the foreign exchange swaps and forwards market in particular, CLS estimates that it settles more than 50 percent of foreign exchange swap and forward transactions that are subject to settlement risk.[72] CLS also has announced a multi-year strategic objective to expand settlement services to include additional currencies, increase volume capacity, and add additional settlement times. Treasury understands that the Federal Reserve and the CLS Oversight Committee are currently reviewing these plans, as well as encouraging the expansion of other PVP settlement services. Furthermore, the vast majority of foreign exchange swaps and forwards that are not settled with CLS, or through some other internal netting mechanism, have a regulated banking entity as one (or both) of the counterparties. In light of the prudential supervision of these entities, particularly the controls that must be applied to meet the expectations of their regulators, these financial institutions must maintain adequate payment and settlement arrangements.

(v) Possible Use of Exemption To Evade Requirements

Treasury has considered several factors to assess whether the use of an exemption for foreign exchange swaps and foreign exchange forwards could be used to evade otherwise applicable regulatory requirements. Treasury shares the concern, expressed by several commenters,[73] that issuing an exemption for foreign exchange swaps and forwards potentially could be exploited by some market participants to evade regulatory requirements that otherwise would apply to the substance of a transaction. Nonetheless, the nature of foreign exchange swaps and forwards transactions (as defined by the CEA) makes it difficult for these products to be structured to replicate the cash flows associated with currency or interest rate swaps to evade regulatory requirements under the CEA. The likelihood that foreign exchange swaps and forwards might be structured to evade other regulatory requirements is further reduced by the extensive oversight by regulators, particularly the supervision of banks which are the main participants in this market.

Unlike other types of swaps, foreign exchange swaps and forwards are distinct because, as defined by the CEA, these transactions must (1) involve the exchange of the principal amounts of the two currencies exchanged, as opposed to a set of cash flows based upon some floating reference rate, and (2) be settled on a physical basis.[74]

A ''swap'' regulated under the CEA, such as a currency swap, interest rate swap, or other derivative, generally involves a periodic exchange of a floating amount of cash flows between the counterparties based on the value of the underlying variable(s) on which the derivative contract is based. In contrast, a foreign exchange swap (which will be exempt from the definition of ''swap'' under this determination) involves a simple exchange of principal at one point in time and a reversal of that exchange at some later date. For example, a user of a currency swap could seek funding advantages by obtaining financing in a foreign currency and swapping those cash flows back to the user's locally denominated currency. This would then entail paying or receiving a series of floating interest rate payments (*i.e.,* based on prevailing interest rates) over the life of the transaction. This ability to receive periodic payments during the term of a transaction is a significant feature of ''swaps'' that will be regulated under the CEA, which is absent from a foreign exchange swap or foreign exchange forward.

As discussed above, in a foreign exchange swap transaction, the payment obligations are fixed at the onset of the transaction—with the prices of both legs of the transaction set by highly transparent and liquid markets—and the payments must be made in the currencies involved in the swap. In contrast, the actual amount of the cash flow exchanged by a party to a currency swap (or other derivatives transaction) is unknown at the onset of the transaction. Instead, a payment obligation on either party is dependent on the future value of one or more rates or some future event. The price of the payment itself can be hindered by market volatility or illiquidity, which could affect the value of the transaction.

While foreign exchange swaps could be used by some market participants to speculate on the short-term path of interest rates in some contexts, the operational challenges and transaction costs associated with transforming these instruments to replicate currency or interest rate swaps significantly reduce the likelihood that market participants would do so in order to evade regulatory requirements under the CEA.[75]

developed by the Federal Financial Institutions Examination Council, available at *http://ithandbook.ffiec.gov/it-booklets/wholesale-payment-systems/wholesale-payment-systems-risk-management.aspx.*

[71] One commenter disputes this position, stating that ''[t]he CLS system completely disregards the counterparty credit risk.'' Americans for Financial Reform, at 12. This commenter asserts that ''CLS merely settles transactions between the parties by collecting payments from each party and distributing payments once all parties meet their obligations.'' *Id.*

[72] In this regard, one commenter notes that, notwithstanding the settlement of more than 50 percent of foreign exchange swaps and forwards transactions by CLS, a ''significant volume'' of those transactions are not settled by CLS, and asserts that ''[t]his state of affairs is not 'adequate' under any reasonable interpretation.'' Better Markets, at 11.

[73] As one commenter contends, for example, ''market participants have a boundless ingenuity for developing new products and strategies that fall within the interstices of any regulatory framework.'' Better Markets, Inc. at 11.

[74] In this regard, Treasury notes that, in other swaps transactions, the parties may, by agreement, physically settle their obligations.

[75] Some commenters share this view. Thomson Reuters, for example, states: ''Although transactions costs are becoming lower each year, transforming an interest rate swap into a foreign exchange swap would entail operational challenges and transactions costs. Thomson Reuters believes that increased reporting obligations for all swaps and the enhanced CFTC anti-evasion authority will deter participants from overbroad use of the FX

To begin with, the transactions costs associated with replicating currency swaps through the use of foreign exchange swaps likely would be significant because a market participant would need to regularly roll over its foreign exchange swap position as it seeks to replicate a currency swap. For example, a participant would need to consider the costs associated with the series of separate bid-ask spreads accompanying each of the foreign exchange swap transactions, as well as the costs of monitoring those positions. Thus, whether a participant would structure foreign exchange swap transactions in order to replicate other, non-exempt swaps that are subject to central clearing requirements would be highly dependent on the costs associated with the operational or systems arrangements necessary to execute the foreign exchange swap transactions, relative to the costs imposed by CCPs to clear the other, non-exempt swap transactions, which could vary among market participants. Moreover, as discussed above, approximately 95 percent of foreign exchange swaps and forwards transactions occur between banks. The systems that banks use to conduct foreign exchange swaps and forwards transactions are subject to consolidated supervision, including oversight of the internal controls used to monitor foreign exchange swaps and forwards. Treasury believes, as one commenter similarly noted, that because regulated banks conduct the bulk of foreign exchange swaps and forwards transactions, the risk of using these transactions to evade otherwise applicable regulatory requirements is relatively lower.[76]

Importantly, a determination to exempt foreign exchange swaps and forwards from regulation as ''swaps'' under the CEA will not affect the application of other provisions that are designed to prevent evasion by market participants and improve market transparency. In particular, under the Dodd-Frank Act all foreign exchange swaps and forwards will remain subject to the CFTC's new trade-reporting requirements, enhanced anti-evasion authority, and strengthened business-conduct standards for swaps dealers and major swap participants.[77] Furthermore, the planned opening of global foreign exchange trade repositories will expand reporting to regulators and the public more broadly. This additional reporting will also provide regulators with enhanced information that can be used to detect attempts by market participants to use foreign exchange swaps or forwards to replicate the cash flows associated with currency, interest rate swaps, or other derivatives in order to evade regulatory requirements.

C. Implications of Determination; Treatment of NDFs

(i) Implications of a Determination To Exempt Foreign Exchange Swaps and Forwards From the Term ''Swap'' Under the CEA

Because the Secretary is issuing a written determination to exempt both foreign exchange swaps and forwards from the definition of a ''swap'' under the CEA, these transactions, as well as certain parties that engage in these transactions, will not be subject to some requirements under the CEA, notably the clearing and exchange-trading requirements.

However, foreign exchange swaps and forwards and the parties to such transactions will still be subject to trade-reporting requirements, business conduct standards (including the anti-fraud provision) in section 4s(h) of the CEA and the rules promulgated thereunder by the CFTC, and anti-evasion requirements promulgated by the CFTC. In this regard, section (c) of the determination—which reflects the language of sections 1a(47)(E)(iii)–(iv) and 1b(c) of the CEA—provides that, notwithstanding this determination, certain requirements under the CEA will apply to any foreign exchange swap or foreign exchange forward, or to any party engaged in such a transaction, to the extent provided by such requirements.

Under section 1a(47)(F) of the CEA, a foreign exchange swap or foreign exchange forward that is ''listed and traded on or subject to the rules of a designated contract market or a swap execution facility, or that is cleared by a derivatives clearing organization, shall not be exempt from any provision of [CEA], or the amendments under [Title VII of the Dodd-Frank Act] prohibiting fraud or manipulation.'' [78] Additionally, a determination issued by the Secretary shall not ''affect, or be construed to affect, the applicability of [the CEA] or the jurisdiction of the [CFTC] with respect to agreements, contracts, or transactions in foreign currency pursuant to section 2(c)(2) [of the CEA, regarding retail transactions].'' [79]

(ii) Treatment of NDFs Under the Determination

Several commenters who support issuing a determination to exempt foreign exchange swaps and forwards urge Treasury to extend the determination to apply to NDFs involving foreign exchange.

In general, an NDF is a swap that is cash-settled between two counterparties, with the value of the contract determined by the movement of exchange rates between two currencies. On the contracted settlement date, the profit to one party is paid by the other based on the difference between the contracted NDF rate (set at the trade's inception) and the prevailing NDF fix (usually a close approximation of the spot foreign exchange rate) on an agreed notional amount. NDF contracts do not involve an exchange of the agreed-upon notional amounts of the currencies involved. Instead, NDFs are cash settled in a single currency, usually a reserve currency. NDFs generally are used when international trading of a physical currency is relatively difficult or prohibited.[80]

Several commenters acknowledge the distinction between NDFs and foreign exchange swaps and forwards, as defined by the CEA. One commenter, for example, states that ''NDFs are cash-settled, short-term forward contracts in a foreign currency, in which the profit or loss is calculated as the difference between the contractually agreed upon [foreign exchange] rate and the [foreign exchange] rate on the date of settlement.'' [81] Nonetheless,

exemption under consideration.'' *See also* FX Investor Group, at 2.

[76] FX Investor Group, at 2 (observing that ''there is little risk of such institutions not ensuring that the spirit of this rule is met'').

[77] *See* CEA section 1a(47)(E)(iii) (reporting) and (iv) (business conduct standards), 7 U.S.C 1a(47)(E)(iii) and (iv). *See* also Further Definition of ''Swap,'' ''Security-Based Swap,'' and ''Security-Based Swap Agreement''; Mixed Swaps; Security-Based Swap Agreement Recordkeeping, 77 FR 48,208, 48,253 (''CFTC–SEC Joint Products Rule'') (addressing the application of certain reporting requirements and business-conduct standards). In addition, Treasury notes that: (i) CEA section 1a(47)(F)(i), 7 U.S.C. 1a(47)(F)(i), provides that foreign exchange swaps and forwards that are listed and traded on or subject to the rules of a designated contract market or swap execution facility, or are cleared by a derivatives clearing organization, shall not be exempt from the fraud and manipulation provisions of the CEA; and (ii) section 753 of the Dodd-Frank Act amends section 6(c) of the CEA to provide, in relevant part, that ''it shall be unlawful for any person, directly or indirectly, to manipulate or attempt to manipulate the price of any swap, or of any commodity in interstate commerce, or for future delivery on or subject to the rules of any registered entity.'' 7 U.S.C. 9, 15. *See also* CFTC–SEC Joint Products Rule, 77 FR at 48,253, n. 512.

[78] 7 U.S.C. 1a(47)(F)(i).

[79] 7 U.S.C. 1a(47)(F)(ii) (referring, in turn, to 7 U.S.C. 2(c)(2)).

[80] *See* CFTC–SEC Joint Products Rule, 77 FR at 48,254–255.

[81] Coalition for Derivatives End-Users (''Coalition''), at 3. *See also* Covington & Burling, LLP, at 2 (''in an NDF, the trade closes out at maturity upon delivery of the net value of the

Continued

commenters who urge Treasury to extend the proposed determination to cover NDFs contend that ''NDFs are economically and functionally identical to [foreign exchange] forwards, despite the fact that they are cash settled in just one currency and do not involve the exchange of underlying currencies because of currency controls or local law restrictions in certain foreign jurisdictions.'' [82] These commenters argue, therefore, that the grounds that Treasury identified in the NPD for issuing an exemption for foreign exchange forwards likewise should apply to NDFs.[83] Moreover, one commenter argues that the definition of a ''foreign exchange forward'' in the CEA does not require the ''physical exchange'' of the two currencies and, thus, this term should not be interpreted as precluding the inclusion of an NDF within the scope of an exemption.[84]

The statutory provisions that limit a ''foreign exchange forward'' or a ''foreign exchange swap'' to an ''exchange'' of two different currencies entail the actual delivery of those currencies as an integral part of the transaction, rather than simply a transfer of the value corresponding to the difference in the prices of the two currencies on a specified date.[85] Treasury observes that, recognizing the foregoing, the CFTC and Securities and Exchange Commission (collectively, the ''Commissions'') have defined the term ''swap'' to include an NDF.[86] Correspondingly, the Commissions have determined that ''foreign exchange forward'' or ''foreign exchange swap'' do not encompass an NDF.[87] In the preamble to the CFTC–SEC Joint Products Rule, the Commissions explain that ''NDFs do not meet the definitions of 'foreign exchange forward' or 'foreign exchange swap' set forth in the CEA [because] NDFs do not involve an 'exchange' of two different currencies (an element of the definition of both a foreign exchange forward and a foreign exchange swap); instead, they are settled by payment in one currency (usually U.S. dollars).'' [88] Accordingly, Treasury concludes that an NDF would not meet either definition under the CEA for the purposes of this determination.[89]

The requirement in the definitions of ''foreign exchange forward'' and ''foreign exchange swap,'' respectively, to ''exchange'' the two currencies should not be interpreted as requiring each foreign exchange swap or forward transaction to be settled independently. Rather, an entity, such as CLS or any other operator of a multilateral PVP settlement system, that settles a series of foreign exchange swap and forward transactions may use appropriate mechanisms to net transactions involving the same parties and the same currencies, and deliver each of the currencies to the respective parties. Applying appropriate mechanisms during the settlement process to net qualifying foreign exchange swap and forward transactions conducted by a group of parties should satisfy the limitations under the CEA because the essential elements of each of those transactions—namely, an exchange of two different currencies at a predefined, fixed rate—are left intact.[90]

III. Procedural Analysis

A. Executive Order 12866 and Executive Order 13563

Executive Orders 13563 and 12866 direct an agency to assess all costs and benefits of available regulatory alternatives and, if regulation is necessary, to select regulatory approaches that maximize net benefits (including potential economic, environmental, public health and safety effects, distributive impacts, and equity). Executive Order 13563 emphasizes the importance of quantifying both costs and benefits, of reducing costs, of harmonizing rules, and of promoting flexibility. This rule has been designated a ''significant regulatory action'' although not economically significant, under section 3(f) of Executive Order 12866. Accordingly, the rule has been reviewed by the Office of Management and Budget.

B. Regulatory Flexibility Act

The Regulatory Flexibility Act (5 U.S.C. 601 *et seq.*) generally requires an agency to prepare a regulatory flexibility analysis unless the agency certifies that the rule will not have a significant economic impact on a substantial number of small entities. It is hereby certified that this determination would not have a significant economic impact on a substantial number of small entities. This certification is based on the fact that entities that engage in foreign exchange swaps and forwards, as defined by the CEA and as described in this determination, tend to be large entities. Accordingly, a regulatory flexibility analysis is not required.

IV. Final Determination

Pursuant to section 1a(47)(E)(ii), the Secretary will submit this final determination to the appropriate committees of Congress as of November 20, 2012. For the reasons set forth in sections I and II, which are incorporated into and made part of this section IV, the Secretary issues a determination, as follows:

(a) *Definitions.*

For the purposes of this determination, the following definitions apply:

(1) *Act* means the Commodity Exchange Act.

(2) *Commission* means the Commodity Futures Trading Commission.

(3) *Dodd-Frank Act* means the Dodd-Frank Wall Street Reform and Consumer Protection Act.

---

underlying exchange, denominated in a pre-determined currency (usually the deliverable currency in the currency pair)'').

[82] Investment Company Institute, at 4.

[83] Investment Company Institute, at 4 (contending that ''the minimal benefits to overseeing systemic risk from including NDFs within the central clearing and exchange trading regime do not justify the costs of narrowly interpreting the definition of [foreign exchange] forward to exclude NDFs'').

[84] MFX Solutions, Inc., at 2 (''[The definitions of foreign exchange forward and foreign exchange swap] set limits on the scope of Treasury's exemptive authority under Section 721 of the Dodd-Frank Act and as such seem to rule out an exemption from the definition of 'swap' for non-fixed rate foreign exchange swaps and forwards. The definitions, however, do not appear to preclude exemption of non-deliverable swaps and forwards since the need for a 'physical exchange' is not specified in the CEA's definitions.'').

[85] *Accord* Further Definition of ''Swap''; ''Security-Based Swap''; and ''Security-Based Swap Agreement''; Mixed Swaps; Security-Based Swap Agreement Recordkeeping, 77 FR at 48,256 (Aug. 13, 2012) (''CFTC–SEC Joint Products Rules'').

[86] 17 CFR 1.3(xxx)(3)(v)(C).

[87] 17 CFR 1.3(xxx)(3)(iii) (defining the term foreign exchange forward); 17 CFR 1.3(xxx)(3)(iv) (defining the term foreign exchange swap).

[88] CFTC–SEC Joint Products Rule, 77 FR at 48,255.

[89] Under section 712(d)(1) of the Dodd-Frank Act, 15 U.S.C. 8302(d)(1), the Commissions are authorized to further define the term ''swap'' under the CEA, and Treasury does not intend that the Commissions' joint rules in respect of the status of NDFs as swaps be affected by this written determination issued under other provisions of the CEA.

[90] Nothing in this paragraph is intended to: (1) Address transactions described in footnote 539 of the CFTC–SEC Joint Products Rule; or (2) establish a ''bookout'' right allowing parties to avoid exchanging currencies, each of which, depending on the relevant facts and circumstances, may fall within CFTC regulation 1.3(xxx)(6)(ii). Regarding the former, in the CFTC–SEC Joint Products Rule, the Commissions stated:

[l]ikewise, the Commissions have determined that a foreign exchange transaction, which initially is styled as or intended to be a ''foreign exchange forward,'' and which is modified so that the parties settle in a reference currency (rather than settle through the exchange of the 2 specified currencies), does not conform with the definition of ''foreign exchange forward'' in the CEA.

See CFTC–SEC Joint Products Rule at 48255 n.539 (internal citation omitted).

(4) *Foreign exchange forward* shall have the same meaning as in section 1a(24) of the Act.

(5) *Foreign exchange swap* shall have the same meaning as in section 1a(25) of the Act.

(6) *Swap* shall have the same meaning as in section 1a(47) of the Act.

(b) *Authority and purpose.* This determination is issued under sections 1a(47)(E) and 1b of the Act in order to implement the provisions of the Act relating to the treatment of foreign exchange swaps and foreign exchange forwards as swaps under the Act.

(c) *Findings and exemption.* (1) *Considerations.* The Secretary has considered—

(i) Whether the required trading and clearing of foreign exchange swaps and foreign exchange forwards would create systemic risk, lower transparency, or threaten the financial stability of the United States, and finds that the required trading and clearing of these instruments would introduce new challenges and could result in negative consequences, without improving transparency;

(ii) Whether foreign exchange swaps and foreign exchange forwards are already subject to a regulatory scheme that is materially comparable to that established by this Act for other classes of swaps, and finds that the regulatory scheme for foreign exchange swaps and foreign exchange forwards applicable in the U.S., as well as the regulatory schemes in other jurisdictions, have required specific actions that address settlement risk, mitigate counterparty credit risk, and manage other risks associated with foreign exchange swaps and forwards;

(iii) The extent to which bank regulators of participants in the foreign exchange market provide adequate supervision, including capital and margin requirements, and finds that regulators are adequately supervising these participants, in part by requiring the implementation of risk-management and operational processes, including the use of payment-versus-payment settlement arrangements for settling transactions and the adoption of credit support annexes with counterparties;

(iv) The extent of adequate payment and settlement systems, and finds that these systems are adequate for foreign exchange swaps and foreign exchange forwards, particularly because a specialized settlement system, which is subject to Federal oversight, has proven capabilities to settle the majority of all global foreign exchange transactions in multiple currencies; and

(v) The use of a potential exemption of foreign exchange swaps and foreign exchange forwards to evade otherwise applicable regulatory requirements, and finds that foreign exchange swaps and foreign exchange forwards, as defined under the Act, are distinguished from other derivatives, widely used by supervised banks for bona fide funding transactions, and not likely to be used to evade otherwise applicable regulatory requirements because of operational and transactions costs associated with potentially transforming these instruments into other derivatives that are subject to regulatory requirements under the Act.

(2) *Exemption.* Upon consideration of each of the factors set forth in section 1b of the Act, the Secretary finds that—

(i) Foreign exchange swaps and foreign exchange forwards should not be regulated as swaps under the Act; and

(ii) Foreign exchange swaps and foreign exchange forwards are not structured to evade the requirements of the Dodd-Frank Act, in violation of any rule promulgated by the Commission, pursuant to section 721(c) of the Dodd-Frank Act (15 U.S.C. 8321)—and, accordingly, hereby determines that any foreign exchange swap or foreign exchange forward hereby is exempt from the definition of the term ''swap'' under the Act.

(d) *Scope*—As provided in sections 1a(47)(E) and 1b(c) of the Act—

(1) *Reporting.* Notwithstanding this determination, all foreign exchange swaps and foreign exchange forwards shall be reported to a either a swap data repository or, if there is no swap data repository that would accept such swaps or forwards, to the Commission, pursuant to section 4r of the Act (7 U.S.C. 6r) within such time period as the Commission may by rule or regulation prescribe.

(2) *Business standards.* Notwithstanding this determination, any party to a foreign exchange swap or forward that is a swap dealer or major swap participant (as such terms are defined under the Act or under section 721(c) of the Dodd-Frank Act (15 U.S.C. 8321)) shall conform to the business conduct standards contained in section 4s(h) of the Act (7 U.S.C. 6s(h)).

(3) *Effect of determination.* This determination shall not exempt any foreign exchange swap or foreign exchange forward traded on a designated contract market or swap execution facility from any applicable anti-manipulation provision of the Act.

Dated: November 16, 2012.

Timothy F. Geithner,

Secretary.

[FR Doc. 2012–28319 Filed 11–19–12; 8:45 am]

BILLING CODE 4810–25–P

DEPARTMENT OF THE TREASURY

Open Meeting of the Financial Research Advisory Committee

AGENCY: Office of Financial Research, Department of the Treasury.

ACTION: Notice of open meeting.

SUMMARY: The Financial Research Advisory Committee for the Treasury's Office of Financial Research is convening for its first meeting on Wednesday, December 5, 2012 in the Cash Room, Department of the Treasury, 1500 Pennsylvania Avenue NW., Washington, DC 20220, beginning at 10 a.m. Eastern Time. The meeting will be open to the public via live webcast at *http://www.treasury.gov/ofr* and limited seating may also be available.

DATES: The meeting will be held on Wednesday, December 5, 2012, beginning at 10 a.m. Eastern Time.

ADDRESSES: The meeting will be held in the Cash Room, Department of the Treasury, 1500 Pennsylvania Avenue NW., Washington, DC 20220. The meeting will be open to the public via live webcast at *http://www.treasury.gov/ofr.* A limited number of seats may be available for those interested in attending the meeting in person, and those seats would be on a first-come, first-served basis. Because the meeting will be held in a secured facility, members of the public who plan to attend the meeting must contact the Office of Financial Research (OFR) by email at *andrea.b.ianniello@treasury.gov* by 5 p.m. Eastern Time on November 26, 2012 to inform the OFR of their desire to attend the meeting and to receive further instructions about building clearance.

FOR FURTHER INFORMATION CONTACT: Andrea Ianniello, Designated Federal Officer, Office of Financial Research, Department of the Treasury, 1500 Pennsylvania Avenue NW., Washington, DC 20220, (202) 622–3002 (this is not a toll-free number), *andrea.b.ianniello@treasury.gov.* Persons who have difficulty hearing or speaking may access this number via TTY by calling the toll-free Federal Relay Service at 800–877–8339.

SUPPLEMENTARY INFORMATION: Notice of this meeting is provided in accordance with the Federal Advisory Committee Act, 5 U.S.C. App. 2, 10(a)(2), through implementing regulations at 41 CFR 102–3.150.

Public Comment: Members of the public wishing to comment on the business of the Financial Research Advisory Committee are invited to

submit written statements by any of the following methods:

• *Electronic Statements.* Email the Committee's Designated Federal Officer at *andrea.b.ianniello@treasury.gov.*

• *Paper Statements.* Send paper statements in triplicate to the Financial Research Advisory Committee, Attn: Andrea Ianniello, Office of Financial Research, Department of the Treasury, 1500 Pennsylvania Avenue NW., Washington, DC 20220.

The Department will post statements on its Web site, *http://www.treasury.gov/ofr,* including any business or personal information provided, such as names, addresses, email addresses, or telephone numbers. The Department of the Treasury will also make such statements available for public inspection and copying in the Department of the Treasury's library, Room 1428, 1500 Pennsylvania Avenue NW., Washington, DC 20220 on official business days between the hours of 10 a.m. and 5 p.m. Eastern Time. You may make an appointment to inspect statements by telephoning (202) 622–0990. All statements, including attachments and other supporting materials, will be part of the public record and subject to public disclosure. You should submit only information that you wish to make available publicly.

Tentative Agenda/Topics for Discussion: The Committee provides an opportunity for researchers, industry leaders, and other qualified individuals to offer their advice and recommendations to the OFR, which, among other things, is responsible for collecting and standardizing data on financial institutions and their activities and for supporting the work of financial regulatory agencies.

This is the first meeting of the Financial Research Advisory Committee. At this meeting, Committee members may be introduced, briefed on the Committee Charter and Bylaws, and presented with OFR updates and other topics of discussion. For more information on the OFR and the Committee, please visit the OFR Web site at *http://www.treasury.gov/ofr.*

Dated: November 14, 2012.

Michele Shannon,

Chief Operating Officer, Office of Financial Research.

[FR Doc. 2012–28193 Filed 11–19–12; 8:45 am]

BILLING CODE 4810–25–P

DEPARTMENT OF THE TREASURY

Office of Foreign Assets Control

Additional Designations, Foreign Narcotics Kingpin Designation Act

AGENCY: Office of Foreign Assets Control, Treasury.

ACTION: Notice.

SUMMARY: The U.S. Department of the Treasury's Office of Foreign Assets Control (''OFAC'') is publishing the names of two individuals and eight entities whose property and interests in property have been blocked pursuant to the Foreign Narcotics Kingpin Designation Act (''Kingpin Act'') (21 U.S.C. 1901–1908, 8 U.S.C. 1182).

DATES: The designation by the Director of OFAC of the two individuals and eight entities identified in this notice pursuant to section 805(b) of the Kingpin Act is effective on November 14, 2012.

FOR FURTHER INFORMATION CONTACT: Assistant Director, Sanctions Compliance & Evaluation, Office of Foreign Assets Control, U.S. Department of the Treasury, Washington, DC 20220, Tel: (202) 622–2490.

SUPPLEMENTARY INFORMATION:

Electronic and Facsimile Availability

This document and additional information concerning OFAC are available on OFAC's Web site at *http://www.treasury.gov/ofac* or via facsimile through a 24-hour fax-on-demand service at (202) 622–0077.

Background

The Kingpin Act became law on December 3, 1999. The Kingpin Act establishes a program targeting the activities of significant foreign narcotics traffickers and their organizations on a worldwide basis. It provides a statutory framework for the imposition of sanctions against significant foreign narcotics traffickers and their organizations on a worldwide basis, with the objective of denying their businesses and agents access to the U.S. financial system and the benefits of trade and transactions involving U.S. companies and individuals.

The Kingpin Act blocks all property and interests in property, subject to U.S. jurisdiction, owned or controlled by significant foreign narcotics traffickers as identified by the President. In addition, the Secretary of the Treasury, in consultation with the Attorney General, the Director of the Central Intelligence Agency, the Director of the Federal Bureau of Investigation, the Administrator of the Drug Enforcement Administration, the Secretary of Defense, the Secretary of State, and the Secretary of Homeland Security may designate and block the property and interests in property, subject to U.S. jurisdiction, of persons who are found to be: (1) Materially assisting in, or providing financial or technological support for or to, or providing goods or services in support of, the international narcotics trafficking activities of a person designated pursuant to the Kingpin Act; (2) owned, controlled, or directed by, or acting for or on behalf of, a person designated pursuant to the Kingpin Act; or (3) playing a significant role in international narcotics trafficking.

On November 14, 2012, the Director of OFAC designated the following two individuals and eight entities whose property and interests in property are blocked pursuant to section 805(b) of the Kingpin Act.

Individuals

1. LORENZANA CORDON, Marta Julia, La Reforma, Zacapa, Guatemala; DOB 18 Jun 1976; POB Guatemala; nationality Guatemala; citizen Guatemala; Cedula No. R19 5468 (Guatemala); NIT #7142099 (Guatemala) (individual) [SDNTK].
2. LORENZANA CORDON, Ovaldino, La Reforma, Zacapa, Guatemala; DOB 06 Aug 1968; POB Guatemala; nationality Guatemala; citizen Guatemala; Cedula No. R19 3934 (Guatemala); NIT #4968093 (Guatemala) (individual) [SDNTK].

Entities

3. LOLALIMES, La Reforma, Zacapa, Guatemala [SDNTK].
4. CONSTRUCTORA W.L. (a.k.a. SERVICENTRO LA GRAN VIA), La Reforma, Zacapa, Guatemala; NIT #4965647 (Guatemala) [SDNTK].
5. CONSTRUCTORA H.L.P. (a.k.a. GASOLINERA JESUS MARIA; a.k.a. TRANSPORTES LC), La Reforma, Zacapa, Guatemala; NIT# 557109K (Guatemala) [SDNTK].
6. TRANSPORTES J.L. CORDON (a.k.a. OBRA CIVIL Y CARRETERAS), Guatemala; NIT #4985931 (Guatemala) [SDNTK].
7. CONSTRUCTORA H.L.T., La Reforma, Zacapa, Guatemala; Folio Mercantil No. 227138 (Guatemala) [SDNTK].
8. ADMINISTRADORA DEL ORIENTE (a.k.a. HOTEL REGENTE; a.k.a. ESTACION GUADALUPE), Guatemala; NIT #7142099 (Guatemala) [SDNTK].
9. IMPORTADORA Y EXPORTADORA LORENZANA (a.k.a. IMPORTADORA LORENZANA, S.A.), La Reforma, Zacapa,

Guatemala; NIT #35599 (Guatemala) [SDNTK].

10. INVERSIONES IRIS MANUELA, S.A. (a.k.a. SERVICENTRO DEL LAGO; a.k.a. SERVIFIESTAS ELEGANCE), Guatemala City, Guatemala; NIT #2688827–0 (Guatemala) [SDNTK].

Dated: November 14, 2012.

Adam J. Szubin,

Director, Office of Foreign Assets Control.

[FR Doc. 2012–28195 Filed 11–19–12; 8:45 am]

BILLING CODE 4810–AL–P

DEPARTMENT OF THE TREASURY

Office of Foreign Assets Control

Additional Designations, Foreign Narcotics Kingpin Designation Act

AGENCY: Office of Foreign Assets Control, Treasury.

ACTION: Notice.

SUMMARY: The U.S. Department of the Treasury's Office of Foreign Assets Control (''OFAC'') is publishing the name of one individual whose property and interests in property has been blocked pursuant to the Foreign Narcotics Kingpin Designation Act (''Kingpin Act'') (21 U.S.C. §§ 1901–1908, 8 U.S.C. 1182).

DATES: The designation by the Director of OFAC of the one individual identified in this notice pursuant to section 805(b) of the Kingpin Act is effective on November 15, 2012.

FOR FURTHER INFORMATION CONTACT: Assistant Director, Sanctions Compliance & Evaluation, Office of Foreign Assets Control, U.S. Department of the Treasury, Washington, DC 20220, Tel: (202) 622–2490.

SUPPLEMENTARY INFORMATION:

Electronic and Facsimile Availability

This document and additional information concerning OFAC are available on OFAC's Web site at *http://www.treasury.gov/ofac* or via facsimile through a 24-hour fax-on-demand service at (202) 622–0077.

Notice: On November 15, 2012, the Director of OFAC designated the following one individual whose property and interests in property are blocked pursuant to section 805(b) of the Kingpin Act.

Individual

1. BARICH, Mohammad Naim (a.k.a. BARAICH, Mullah Naeem; a.k.a. BARECH AKHUND, Mullah Naim; a.k.a. BARECH, Mullah Naim; a.k.a. BAREH, Mullah Naim; a.k.a. BARIC, Mullah Naeem; a.k.a. BARICH, Haji Gul Mohammed Naim; a.k.a. BARICH, Mullah Naim; a.k.a. BERICH, Naim; a.k.a. ''HAJI GUL MOHAMMAD''; a.k.a. ''MULLAH NAIMULLAH''); DOB 01 Jan 1975; alt. DOB 01 Jan 1974; alt. DOB 01 Jan 1976; POB Lakhi Village, Hazarjuft Area, Garmsir District, Helmand Province, Afghanistan; alt. POB Laki Village, Garmsir District, Helmand Province, Afghanistan; alt. POB Lakari Village, Garmsir District, Helmand Province, Afghanistan; alt. POB Darvishan, Garmsir District, Helmand Province, Afghanistan; alt. POB De Luy Wiyalah Village, Garmsir District, Helmand Province, Afghanistan; nationality Afghanistan (individual) [SDNTK].

Dated: November 15, 2012.

Adam J. Szubin,

Director, Office of Foreign Assets Control.

[FR Doc. 2012–28191 Filed 11–19–12; 8:45 am]

BILLING CODE 4810–AL–P

DEPARTMENT OF THE TREASURY

Internal Revenue Service

Proposed Collection; Comment Request for Form 4970

AGENCY: Internal Revenue Service (IRS), Treasury.

ACTION: Notice and request for comments.

SUMMARY: The Department of the Treasury, as part of its continuing effort to reduce paperwork and respondent burden, invites the general public and other Federal agencies to take this opportunity to comment on proposed and/or continuing information collections, as required by the Paperwork Reduction Act of 1995, Public Law 104–13 (44 U.S.C. 3506(c)(2)(A)). Currently, the IRS is soliciting comments concerning Form 4970, Tax on Accumulation Distributions of Trusts.

DATES: Written comments should be received on or before January 22, 2013 to be assured of consideration.

ADDRESSES: Direct all written comments to Yvette Lawrence, Internal Revenue Service, room 6129, 1111 Constitution Avenue NW., Washington, DC 20224.

FOR FURTHER INFORMATION CONTACT: Requests for additional information or copies of the form and instructions should be directed to Allan Hopkins at Internal Revenue Service, room 6129, 1111 Constitution Avenue NW., Washington, DC 20224, or at (202) 622–6665, or through the Internet at *Allan.M.Hopkins@irs.gov.*

SUPPLEMENTARY INFORMATION:

Title: Tax on Accumulation Distribution of Trusts.

OMB Number: 1545–0192.

Form Number: 4970.

Abstract: Form 4970 is used by beneficiary of domestic or foreign trust to compute the tax adjustment attributable to an accumulation distribution. This form is used to verify whether the correct tax has been paid on the accumulation distribution.

Current Actions: There are no changes being made to the form at this time.

Type of Review: Extension of a currently approved collection.

Affected Public: Individuals or households.

Estimated Number of Respondents: 30,000.

Estimated Time per Response: 1 hour, 26 minutes.

Estimated Total Annual Burden Hours: 42,900.

The following paragraph applies to all of the collections of information covered by this notice:

An agency may not conduct or sponsor, and a person is not required to respond to, a collection of information unless the collection of information displays a valid OMB control number. Books or records relating to a collection of information must be retained as long as their contents may become material in the administration of any internal revenue law. Generally, tax returns and tax return information are confidential, as required by 26 U.S.C. 6103.

Request for Comments: Comments submitted in response to this notice will be summarized and/or included in the request for OMB approval. All comments will become a matter of public record. Comments are invited on: (a) Whether the collection of information is necessary for the proper performance of the functions of the agency, including whether the information shall have practical utility; (b) the accuracy of the agency's estimate of the burden of the collection of information; (c) ways to enhance the quality, utility, and clarity of the information to be collected; (d) ways to minimize the burden of the collection of information on respondents, including through the use of automated collection techniques or other forms of information technology; and (e) estimates of capital or start-up costs and costs of operation, maintenance, and purchase of services to provide information.

Approved: November 14, 2012.

Allan Hopkins,

Tax Analyst.

[FR Doc. 2012–28097 Filed 11–19–12; 8:45 am]

BILLING CODE 4830–01–P

FEDERAL REGISTER

Vol. 77 Tuesday,

No. 224 November 20, 2012

Part II

Securities and Exchange Commission

Self-Regulatory Organizations; National Stock Exchange, Inc.; Notice of Filing and Immediate Effectiveness of Proposed Rule Change To Amend Its Fee and Rebate Schedule; Notice

SECURITIES AND EXCHANGE COMMISSION

[Release No. 34–68226; File No. SR–NSX–2012–19]

Self-Regulatory Organizations; National Stock Exchange, Inc.; Notice of Filing and Immediate Effectiveness of Proposed Rule Change To Amend Its Fee and Rebate Schedule

November 14, 2012.

Pursuant to Section 19(b)(1) of the Securities Exchange Act of 1934 (the ''Exchange Act'') [1] and Rule 19b–4 thereunder,[2] notice is hereby given that on November 2, 2012, National Stock Exchange, Inc. (''NSX®'' or ''Exchange'') filed with the Securities and Exchange Commission (''SEC'' or ''Commission'') the proposed rule change, as described in Items I, II and III below, which Items have been prepared by the Exchange. The Commission is publishing this notice to solicit comment on the proposed rule change from interested persons.

I. Self-Regulatory Organization's Statement of the Terms of Substance of the Proposed Rule Change

The Exchange is proposing to amend its Fee and Rebate Schedule (the ''Fee Schedule'') issued pursuant to Exchange Rule 16.1(a) to modify the rebates for certain orders executed in the Exchange's Order Delivery and Automated Response (''Order Delivery'') mode. The text of the proposed rule change is available on the Exchange's Web site at *www.nsx.com,* at the Exchange's principal office, and at the Commission's public reference room.

II. Self-Regulatory Organization's Statement of the Purpose of, and Statutory Basis for, the Proposed Rule Change

In its filing with the Commission, the Exchange included statements concerning the purpose of and basis for the proposed rule change and discussed any comments it received on the proposed rule change. The text of these statements may be examined at the places specified in Item IV below. The Exchange has prepared summaries, set forth in sections A, B, and C below, of the most significant parts of such statements.

[1] 15 U.S.C. 78s(b)(1).

[2] 17 CFR 240.19b–4.

A. Self-Regulatory Organization's Statement of the Purpose of, and the Statutory Basis for, the Proposed Rule Change

1. Purpose

The Exchange is proposing to amend Section II of its Fee Schedule to modify the rebates for orders executed in the Exchange's Order Delivery mode in securities with quoted prices of at least one dollar. Under Section II of the Fee Schedule, the Exchange offers ETP Holders both a Primary and Alternate Fee Schedule with six (6) tiers of progressively greater rebates.[3] An ETP Holder's monthly average daily trading volume (''ADV'') determines which rebate tier the ETP Holder meets. The Exchange proposes to consolidate tiers and increase the rebates under Section II of the Fee Schedule for Order Delivery participants as follows:

- Tier 1—ADV range would change from 0 and <10.0 million to 0 & <12.0 million. Rebate amount is unchanged.
- Tier 2—ADV range would change from 10.0 and <12.0 million to 12.0 & <14.0 million. Rebates would change from $0.0011 to $0.0014 in the Primary Fee Schedule and from $0.0014 to $0.0017 in the Alternate Fee Schedule.
- Tier 3—ADV range would change from 12.0 and <15.0 million to 14.0 & <16.0 million. Rebates would change from $0.0015 to $0.0018 in the Primary Fee Schedule and from $0.0018 to $0.0021 in the Alternate Fee Schedule.
- Tier 4—ADV range would change from 15.0 and <20.0 million to 16.0 million and above. Rebates would change from $0.0021 to $0.0024 in the Primary Fee Schedule and from $0.0024 to $0.0027 in the Alternate Fee Schedule.
- Tiers 5 and 6 would be deleted.[4]

The Exchange believes improving rebates is a reasonable method to incentivize ETP Holders that use Order Delivery to submit greater order volumes to the Exchange, which would result in increased revenues to the Exchange. Finally, the Exchange notes that it operates in a highly competitive market in which market participants can readily favor competing venues. In such an environment, the Exchange must continually review, and consider adjusting, its fees and rebates to remain competitive with other exchanges. The Exchange believes that the proposed rule change reflects this competitive environment.

Operative Date and Notice

The Exchange currently intends to make the proposed modifications, which are effective on filing of this proposed rule, operative as of commencement of trading on November 2, 2012.[5] Pursuant to Exchange Rule 16.1(c), the Exchange will ''provide ETP Holders with notice of all relevant dues, fees, assessments and charges of the Exchange'' through the issuance of a Regulatory Circular of the changes to the Fee Schedule and will post a copy of the rule filing on the Exchange's Web site (*www.nsx.com*).

2. Statutory Basis

The Exchange believes that the proposed rule change is consistent with the provisions of Section 6(b) of the Securities Exchange Act of 1934 [6] (the ''Act''), in general, and Section 6(b)(4) of the Act,[7] in particular in that it is designed to provide for the equitable allocation of reasonable dues, fees and other charges among its members and other persons using the facilities of the Exchange. Moreover, the proposed rebate structure under Section II of the Fee Schedule is not discriminatory in that all ETP Holders are eligible to submit (or not submit) liquidity adding trades and quotes, and may do so at their discretion in the daily volumes they choose during the course of the measurement period. The volume adjustments are reasonable methods to incentivize the submission of such orders. All similarly situated ETP Holders are subject to the same fee structure, and access to the Exchange is offered on terms that are not unfairly-discriminatory. Volume-based rebates and discounts have been widely adopted in the equities markets, and are equitable because they are open to all ETP Holders on an equal basis and provide rebates that are reasonably related to the value of an exchange's market quality associated with the

[3] ETP Holders that are Order Delivery participants automatically receive the Alternate Fee Schedule upon meeting the minimum ADV threshold of 1,500,000 in Order Delivery Mode and 10,000,000 shares in Automatic Execution Mode. Under the Alternate Fee Schedule, ETP Holders will receive up to an additional $0.0003 liquidity adding rebate over the tiered rebates contained in the Primary Fee Schedule when the tier requirements are met.

[4] Order Delivery participants that met the ADV thresholds required by tiers 5 and 6 were eligible to receive a 25% market data rebate. NSX clarified that this rebate would apply to the Exchange's highest tier under the proposal, tier 4. *See* Email from Chris Solgan, Senior Regulatory Counsel, NSX to Ronesha A. Butler, Special Counsel and David A. Garcia, Attorney-Advisor, Division of Trading and Markets, dated November 8, 2012.

[5] Because the proposed changes are effective November 2, 2012, trading activity occurring on November 1, 2012 will be billed under the then existing Fee Schedule when ETP Holders are invoiced at month end.

[6] 15 U.S.C. 78f(b).

[7] 15 U.S.C. 78f(b)(4).

requirements for the favorable pricing tier.

B. Self-Regulatory Organization's Statement on Burden on Competition

The Exchange does not believe that the proposed rule change will impose any burden on competition that is not necessary or appropriate in furtherance of the purposes of the Act.

C. Self-Regulatory Organization's Statement on Comments on the Proposed Rule Change Received From Members, Participants, or Others

The Exchange has neither solicited nor received written comments on the proposed rule change.

III. Date of Effectiveness of the Proposed Rule Change and Timing for Commission Action

The proposed rule change has taken effect upon filing pursuant to Section 19(b)(3)(A)(ii) of the Exchange Act [8] and subparagraph (f)(2) of Rule 19b–4 [9] thereunder, because, as provided in (f)(2), it changes ''a due, fee or other charge applicable only to a member'' (known on the Exchange as an ETP Holder). At any time within 60 days of the filing of such proposed rule change, the Commission summarily may temporarily suspend such rule change if it appears to the Commission that such action is necessary or appropriate in the public interest, for the protection of investors, or otherwise in furtherance of the purposes of the Act.

IV. Solicitation of Comments

Interested persons are invited to submit written data, views, and arguments concerning the foregoing, including whether the proposed rule change is consistent with the Act. Comments may be submitted by any of the following methods:

Electronic Comments

- Use the Commission's Internet comment form (*http://www.sec.gov/rules/sro.shtml);* or
- Send an email to *rule-comments@sec.gov. Please include File Number SR–NSX–2012–19* on the subject line.

Paper Comments

- Send paper comments in triplicate to Elizabeth M. Murphy, Secretary, Securities and Exchange Commission, 100 F Street NE., Washington, DC 20549–1090.

All submissions should refer to File Number SR–NSX–2012–19. This file number should be included on the subject line if email is used. To help the Commission process and review your comments more efficiently, please use only one method. The Commission will post all comments on the Commission's Internet Web site (*http://www.sec.gov/rules/sro.shtml*). Copies of the submission, all subsequent amendments, all written statements with respect to the proposed rule change that are filed with the Commission, and all written communications relating to the proposed rule change between the Commission and any person, other than those that may be withheld from the public in accordance with the provisions of 5 U.S.C. 552, will be available for Web site viewing and printing in the Commission's Public Reference Room, 100 F Street NE., Washington, DC 20549, on official business days between the hours of 10:00 a.m. and 3:00 p.m. Copies of the filing also will be available for inspection and copying at the principal office of the Exchange. All comments received will be posted without change; the Commission does not edit personal identifying information from submissions. You should submit only information that you wish to make available publicly. All submissions should refer to File Number SR–NSX–2012–19 and should be submitted on or before December 11, 2012.[10]

For the Commission, by the Division of Trading and Markets, pursuant to delegated authority.

Kevin M. O'Neill,

Deputy Secretary.

[FR Doc. 2012–28145 Filed 11–19–12; 8:45 am]

BILLING CODE 8011–01–P

[8] 15 U.S.C. 78s(b)(3)(A)(ii).

[9] 17 CFR 240.19b–4.

[10] 17 CFR 200.30–3(a)(12).

SECURITIES AND EXCHANGE COMMISSION

[Release No. 34–68228; File No. SR–NSX–2012–21]

Self-Regulatory Organizations; National Stock Exchange, Inc.; Notice of Filing and Immediate Effectiveness of Proposed Rule Change To Amend Its Fee and Rebate Schedule

November 14, 2012.

Pursuant to Section 19(b)(1) of the Securities Exchange Act of 1934 (the ''Exchange Act'') [1] and Rule 19b-4 thereunder,[2] notice is hereby given that on November 6, 2012, National Stock Exchange, Inc. (''NSX®'' or ''Exchange'') filed with the Securities and Exchange Commission (''SEC'' or ''Commission'') the proposed rule change, as described in Items I, II, and III below, which Items have been prepared by the Exchange. The Commission is publishing this notice to solicit comment on the proposed rule change from interested persons.

I. Self-Regulatory Organization's Statement of the Terms of Substance of the Proposed Rule Change

The Exchange is proposing to amend its Fee and Rebate Schedule (the ''Fee Schedule'') issued pursuant to Exchange Rule 16.1(a) to modify the rebates for certain orders executed in the Exchange's Order Delivery and Automated Response (''Order Delivery'') mode. The text of the proposed rule change is available on the Exchange's Web site at *www.nsx.com,* at the Exchange's principal office, and at the Commission's public reference room.

II. Self-Regulatory Organization's Statement of the Purpose of, and Statutory Basis for, the Proposed Rule Change

In its filing with the Commission, the Exchange included statements concerning the purpose of and basis for the proposed rule change and discussed any comments it received on the proposed rule change. The text of these statements may be examined at the places specified in Item IV below. The Exchange has prepared summaries, set forth in sections A, B, and C below, of the most significant parts of such statements.

A. Self-Regulatory Organization's Statement of the Purpose of, and the Statutory Basis for, the Proposed Rule Change

1. Purpose

The Exchange is proposing to amend Section II of its Fee Schedule to modify the rebates for orders executed in the Exchange's Order Delivery mode in securities with quoted prices of at least one dollar. Under Section II of the Fee Schedule, the Exchange offers ETP Holders both a Primary and Alternate Fee Schedule with four (4) tiers of progressively greater rebates.[3] An ETP Holder's monthly average daily trading volume (''ADV'') determines which rebate tier the ETP Holder meets. The

[1] 15 U.S.C. 78s(b)(1).

[2] 17 CFR 240.19b–4.

[3] ETP Holders that are Order Delivery participants automatically receive the Alternate Fee Schedule upon meeting the minimum ADV threshold of 1,500,000 in Order Delivery Mode and 10,000,000 shares in Automatic Execution Mode. Under the Alternate Fee Schedule, ETP Holders will receive up to an additional $0.0003 liquidity adding rebate over the tiered rebates contained in the Primary Fee Schedule when the tier requirements are met.

Exchange proposes to modify the tiers under Section II of the Fee Schedule for Order Delivery participants as follows:

- Tier 1—unchanged.
- Tier 2—unchanged.
- Tier 3—ADV range would change from 14.0 and < 16.0 million to 14.0 and < 15.0 million. Rebate amount is unchanged.
- Tier 4—ADV range would change from 16.0 million and above to 15.0 million and above. Rebate amount is unchanged.

The Exchange believes improving rebates is a reasonable method to incentivize ETP Holders that use Order Delivery to submit greater order volumes to the Exchange, which would result in increased revenues to the Exchange. Finally, the Exchange notes that it operates in a highly competitive market in which market participants can readily favor competing venues. In such an environment, the Exchange must continually review, and consider adjusting, its fees and rebates to remain competitive with other exchanges. The Exchange believes that the proposed rule change reflects this competitive environment.

Operative Date and Notice

The Exchange currently intends to make the proposed modifications, which are effective on filing of this proposed rule, operative as of commencement of trading on November 6, 2012.[4] Pursuant to Exchange Rule 16.1(c), the Exchange will ''provide ETP Holders with notice of all relevant dues, fees, assessments and charges of the Exchange'' through the issuance of a Regulatory Circular of the changes to the Fee Schedule and will post a copy of the rule filing on the Exchange's Web site (*www.nsx.com*).

2. Statutory Basis

The Exchange believes that the proposed rule change is consistent with the provisions of Section 6(b) of the Securities Exchange Act of 1934 [5] (the ''Act''), in general, and Section 6(b)(4) of the Act,[6] in particular in that it is designed to provide for the equitable allocation of reasonable dues, fees and other charges among its members and other persons using the facilities of the Exchange. Moreover, the proposed rebate structure under Section II of the Fee Schedule is not discriminatory in that all ETP Holders are eligible to submit (or not submit) liquidity adding trades and quotes, and may do so at their discretion in the daily volumes they choose during the course of the measurement period. The volume adjustments are reasonable methods to incentivize the submission of such orders. All similarly situated ETP Holders are subject to the same fee structure, and access to the Exchange is offered on terms that are not unfairly-discriminatory. Volume-based rebates and discounts have been widely adopted in the equities markets, and are equitable because they are open to all ETP Holders on an equal basis and provide rebates that are reasonably related to the value of an exchange's market quality associated with the requirements for the favorable pricing tier.

B. Self-Regulatory Organization's Statement on Burden on Competition

The Exchange does not believe that the proposed rule change will impose any burden on competition that is not necessary or appropriate in furtherance of the purposes of the Act.

C. Self-Regulatory Organization's Statement on Comments on the Proposed Rule Change Received From Members, Participants, or Others

The Exchange has neither solicited nor received written comments on the proposed rule change.

III. Date of Effectiveness of the Proposed Rule Change and Timing for Commission Action

The proposed rule change has taken effect upon filing pursuant to Section 19(b)(3)(A)(ii) of the Exchange Act [7] and subparagraph (f)(2) of Rule 19b-4 [8] thereunder, because, as provided in (f)(2), it changes ''a due, fee or other charge applicable only to a member'' (known on the Exchange as an ETP Holder). At any time within 60 days of the filing of such proposed rule change, the Commission summarily may temporarily suspend such rule change if it appears to the Commission that such action is necessary or appropriate in the public interest, for the protection of investors, or otherwise in furtherance of the purposes of the Act.

IV. Solicitation of Comments

Interested persons are invited to submit written data, views, and arguments concerning the foregoing, including whether the proposed rule change is consistent with the Act. Comments may be submitted by any of the following methods:

Electronic Comments

- Use the Commission's Internet comment form (*http://www.sec.gov/rules/sro.shtml*); or
- Send an email to *rule-comments@sec.gov.* Please include File Number SR–NSX–2012–21 on the subject line.

Paper Comments

- Send paper comments in triplicate to Elizabeth M. Murphy, Secretary, Securities and Exchange Commission, 100 F Street NE., Washington, DC 20549–1090.

All submissions should refer to File Number SR–NSX–2012–21. This file number should be included on the subject line if email is used. To help the Commission process and review your comments more efficiently, please use only one method. The Commission will post all comments on the Commission's Internet Web site (*http://www.sec.gov/rules/sro.shtml*). Copies of the submission, all subsequent amendments, all written statements with respect to the proposed rule change that are filed with the Commission, and all written communications relating to the proposed rule change between the Commission and any person, other than those that may be withheld from the public in accordance with the provisions of 5 U.S.C. 552, will be available for Web site viewing and printing in the Commission's Public Reference Room, 100 F Street NE., Washington, DC 20549, on official business days between the hours of 10:00 a.m. and 3:00 p.m. Copies of the filing also will be available for inspection and copying at the principal office of the Exchange. All comments received will be posted without change; the Commission does not edit personal identifying information from submissions. You should submit only information that you wish to make available publicly. All submissions should refer to File Number SR–NSX–2012–21 and should be submitted on or before December 11, 2012.

For the Commission, by the Division of Trading and Markets, pursuant to delegated authority.[9]

Kevin M. O'Neill,

Deputy Secretary.

[FR Doc. 2012–28146 Filed 11–19–12; 8:45 am]

BILLING CODE 8011–01–P

[4] Because the proposed changes are effective November 6, 2012, trading activity occurring from November 1, 2012 through November 5, 2012 will be billed under the then existing Fee Schedule when ETP Holders are invoiced at month end.

[5] 15 U.S.C. 78f(b).

[6] 15 U.S.C. 78f(b)(4).

[7] 15 U.S.C. 78s(b)(3)(A)(ii).

[8] 17 CFR 240.19b–4.

[9] 17 CFR 200.30–3(a)(12).

FEDERAL REGISTER

Vol. 77 Tuesday,

No. 224 November 20, 2012

Part III

Department of Defense

General Services Administration

National Aeronautics and Space Administration

48 CFR Chapter 1

Federal Acquisition Regulation; Final Rules

DEPARTMENT OF DEFENSE

GENERAL SERVICES ADMINISTRATION

NATIONAL AERONAUTICS AND SPACE ADMINISTRATION

48 CFR Chapter 1

[Docket FAR 2012–0080, Sequence 7]

Federal Acquisition Regulation; Federal Acquisition Circular 2005–62; Introduction

AGENCIES: Department of Defense (DoD), General Services Administration (GSA), and National Aeronautics and Space Administration (NASA).

ACTION: Summary presentation of a final and interim rule.

SUMMARY: This document summarizes the Federal Acquisition Regulation (FAR) rules agreed to by the Civilian Agency Acquisition Council and the Defense Acquisition Regulations Council (Councils) in this Federal Acquisition Circular (FAC) 2005–62. A companion document, the *Small Entity Compliance Guide* (SECG), follows this FAC. The FAC, including the SECG, is available via the Internet at *http://www.regulations.gov.*

DATES: For effective dates and comment dates see separate documents, which follow.

FOR FURTHER INFORMATION CONTACT: The analyst whose name appears in the table below in relation to each FAR case. Please cite FAC 2005–62 and the specific FAR case numbers. For information pertaining to status or publication schedules, contact the Regulatory Secretariat at 202–501–4755.

LIST OF RULES IN FAC 2005–62

Item	Subject	FAR case	Analyst
I	Updates to Contract Reporting and Central Contractor Registration	2010–014	Loeb.
II	Interagency Acquisitions: Compliance by Nondefense Agencies with Defense Procurement Requirements.	2012–010	Corrigan.
III	Free Trade Agreement—Panama	2012–027	Davis.

SUPPLEMENTARY INFORMATION: Summaries for each FAR rule follow. For the actual revisions and/or amendments made by these FAR cases, refer to the specific item numbers and subjects set forth in the documents following these item summaries. FAC 2005–62 amends the FAR as specified below:

Item I—Updates to Contract Reporting and Central Contractor Registration (FAR Case 2010–014)

GSA, DOD, and NASA published a proposed rule in the **Federal Register** at 76 FR 73564 on November 29, 2011 to revise the practice for and limit the use of generic Data Universal Numbering System (DUNS) Numbers, update policies on reporting into the Federal Procurement Data System (FPDS), and revise clauses for Central Contractor Registration (CCR) and DUNS Number reporting. The rule increases transparency by reducing the use of generic DUNs, but may require more small businesses to register in CCR. The rule clarifies that non-appropriated fund awards will generally not be included in FPDS. The rule also clarifies requirements for agencies to submit and review contract action reports in FPDS. This rule uses the existing term ''Central Contractor Registration'' rather than ''System for Award Management,'' because FAR Case 2012–033 will address the terminology update to ''System for Award Management'' throughout the FAR.

Item II—Interagency Acquisitions: Compliance by Nondefense Agencies With Defense Procurement Requirements (FAR Case 2012–010)

This interim rule amends the FAR to implement section 801 of the National Defense Authorization Act for Fiscal Year 2008 (Pub. L. 110–181), as amended (10 U.S.C. 2304 note). Section 801 requires compliance certifications by non-defense agencies that purchase on behalf of DoD, and clarifies which DoD laws and regulations apply. The agencies must comply with new FAR subpart 17.7, in addition to complying with FAR subpart 17.5. To provide clarification for small business and contracting officers, existing policy for small business goal credit for assisted acquisitions is added to section FAR 4.603(c).

Item III—Free Trade Agreement—Panama (FAR Case 2012–027)

This interim rule implements a new Free Trade Agreement with Panama (see the United States-Panama Trade Promotion Agreement Implementation Act (Pub. L. 112–43) (19 U.S.C. 3805 note)).

This Trade Promotion Agreement is a free trade agreement that provides for mutually non-discriminatory treatment of eligible products and services from Panama. This interim rule is not expected to have a significant economic impact on a substantial number of small entities.

Federal Acquisition Circular (FAC) 2005–62 is issued under the authority of the Secretary of Defense, the Administrator of General Services, and the Administrator for the National Aeronautics and Space Administration.

Unless otherwise specified, all Federal Acquisition Regulation (FAR) and other directive material contained in FAC 2005–62 is effective November 20, 2012, except for Item I which is effective December 20, 2012.

Dated: November 9, 2012.

Laura Auletta,

Director, Office of Governmentwide Acquisition Policy, Office of Acquisition Policy, Office of Governmentwide Policy.

Dated: November 6, 2012.

Richard Ginman,

Deputy Director, Defense Procurement and Acquisition Policy.

Dated: November 5, 2012.

Joseph A. Neurauter,

Senior Procurement Executive/Deputy CAO, Office of Acquisition Policy, U.S. General Services Administration.

Dated: November 5, 2012.

William P. McNally,

Assistant Administrator for Procurement, National Aeronautics and Space Administration.

[FR Doc. 2012–27903 Filed 11–19–12; 8:45 am]

BILLING CODE 6820–EP–P

DEPARTMENT OF DEFENSE

GENERAL SERVICES ADMINISTRATION

NATIONAL AERONAUTICS AND SPACE ADMINISTRATION

48 CFR Parts 1, 4, 13, 19, 32, and 52

[FAC 2005–62; FAR Case 2010–014; Item I; Docket 2010–0014, Sequence 01]

RIN 9000–AL99

Federal Acquisition Regulation; Updates to Contract Reporting and Central Contractor Registration

AGENCY: Department of Defense (DoD), General Services Administration (GSA), and National Aeronautics and Space Administration (NASA).

ACTION: Final rule.

SUMMARY: DoD, GSA, and NASA are issuing a final rule amending the Federal Acquisition Regulation (FAR) to limit the use of generic substitutes instead of Data Universal Numbering System (DUNS) numbers, and update the policies and procedures associated with reporting in the Federal Procurement Data System (FPDS). Additionally, this final rule changes the clauses requiring contractor registration in the Central Contractor Registration (CCR) database and DUNS number reporting.

DATES: *Effective:* December 20, 2012.

FOR FURTHER INFORMATION CONTACT: Mr. Edward Loeb, Procurement Analyst, at 202–501–0650, for clarification of content. For information pertaining to status or publication schedules, contact the Regulatory Secretariat at 202–501–4755. Please cite FAC 2005–62, FAR Case 2010–014.

SUPPLEMENTARY INFORMATION:

I. Background

For decades, the Data Universal Numbering System (DUNS) number provided by Dun & Bradstreet has been the Federal Government's unique identifier for contractors. It is used (1) to uniquely identify a contractor entity, and (2) to roll-up Government procurements to the ultimate parent organization to show the corporate family receiving U.S. obligations. Furthermore, the DUNS number is the identifier for the Federal Procurement Data System (FPDS) and for the Federal Funding Accountability and Transparency Act of 2006 (Transparency Act) reporting to *http://www.usaspending.gov/.*

DoD, GSA, and NASA published a proposed rule in the **Federal Register** at 76 FR 73564 on November 29, 2011, to revise the practice for use of generic DUNS numbers and to update the CCR clause. Due to legitimate challenges encountered with overseas contracting, a practice existed using a generic DUNS number, such as ''Miscellaneous Foreign Vendor'' to enable accounting of the obligation without explicit identification of the vendor, *i.e.,* foreign local contractors where Dun & Bradstreet registration is impracticable, or foreign contractors when identification may endanger the contractor.

When a generic DUNS number is used, the identity of the contractor is masked beyond the local contracting office. The contractor's identification for all downstream reporting processes is the name of the generic DUNS number, for example, ''Miscellaneous Foreign Vendor''.

The practice of using generic DUNS numbers adversely affects the transparency of the Government's data, including Transparency Act contract reporting. Also, the contractor is not able to access and perform its own reporting requirements, such as Transparency Act subcontract reporting, because the contract is not associated with the contractor in Federal-wide processes. As such, the use of a generic DUNS number should be limited to those actions where it is truly necessary. The rule includes requirements intended to more strictly limit the use of the generic DUNS number to foreign contract actions valued at or below $25,000.

For greater transparency and clarification, updates or corresponding changes in procedures and clauses in FAR parts 1, 4, 19, 32, and 52 are related to the use of the DUNS number, and CCR and FPDS reporting.

This rule uses the existing term ''Central Contractor Registration'' rather than ''System for Award Management,'' because FAR Case 2012–033 will address the terminology update to ''System for Award Management'' throughout the FAR.

Six respondents submitted comments on the proposed rule.

II. Discussion and Analysis

The Civilian Agency Acquisition Council and the Defense Acquisition Regulations Council (the Councils) reviewed the comments in the development of the final rule. A discussion of the comments and the changes made to the rule as a result of those comments are provided as follows:

A. Summary of Significant Changes

There are no significant changes in the final rule as a result of public comments. There are some minor changes as addressed in section II.B. of this preamble.

B. Analysis of Public Comments

1. Foreign Vendor Considerations

Comment: Several respondents suggested revisions to the threshold for application to foreign vendors.

Response: The Transparency Act requires the collection of specific contractor identification information, as well as executive compensation for any vendor receiving a Federal award valued greater than $25,000 (with certain exceptions). The Office of Management and Budget (OMB) has issued guidance stating that the DUNS number is the identifier for the Transparency Act, so a specific DUNS number is required.

Comment: Several respondents recommended revision to the CCR registration process for foreign vendors.

Response: The FAR requires that contractors address whether or not they are required to provide specific executive compensation information via CCR. There are no exceptions for foreign vendors in the Transparency Act. Thus, obtaining a DUNS number and CCR registration is required for contracts greater than $25,000. There is no flexibility available beyond that outlined in the rule. In addition, the new System for Award Management will facilitate the registration of foreign vendors by eliminating the need to address registration issues not applicable to foreign vendors.

2. Contract Reporting Policy, FAR 4.603

Comment: One respondent questioned the need to change the FPDS data field title from ''Funding Agency'' to ''Program/Funding Agency'' at FAR 4.603(c).

Response: The term has been ''Program/Funding Agency'' in all reports generated by FPDS since 2003. The change will synchronize the FAR with the FPDS data dictionary. No change to the language is required.

3. Contract Reporting Responsibilities, FAR 4.604

Comment: One respondent sought clarity on whether the procedural changes at FAR 4.604(b)(1) and (2) indicated that the draft or error record cannot remain in that status for more than three days. The respondent also sought clarity regarding whether, if the FPDS report is completed by someone other than the contracting officer,

agencies can assume this is an acceptable practice.

Response: The rule clarifies previously ambiguous language. The draft or error record must be corrected and completed within the three business day deadline. Agency standards dictate that errors must be corrected in a timely fashion and agency systems are utilized to monitor corrections. The contracting officer is ultimately responsible for the contract action report being completed (whether or not the contracting officer is the person that inputs the report). Only the data from completed reports is included in FPDS reports. Drafts and reports containing errors are not considered complete. No change to the proposed language is required.

4. Contract Reporting Procedures, FAR 4.605

Comment: One respondent commented that FAR 4.605(c)(2)(i)(C) and 4.605(c)(2)(ii) seem to overlap with regard to overseas performance.

Response: Presently, FAR 4.605(c)(2)(i) is clear on authorized use of generic DUNS numbers for contract actions valued at or below the simplified acquisition threshold. FAR 4.605(c)(2)(ii) was revised to clarify authorized use of generic DUNS numbers for contract actions valued above $25,000. FAR 4.605(c)(2)(ii) has been revised to clarify that it applies to individuals located outside the United States and its outlying areas for work to be performed outside the United States and its outlying areas.

Comment: One respondent noted that the current language at FAR 4.605(c)(2)(iii) could be misinterpreted. The respondent suggested specifying what decision must be documented as part of the determination.

Response: FAR 4.605(c) has been revised to provide guidance to contracting officers on proper documentation of the decision to authorize a generic DUNS number.

5. Reporting Data, FAR 4.606

Comment: One respondent noted that the new reporting requirements at 4.606(b) that restrict reporting actions with both appropriated and nonappropriated funding to only report the fully appropriated portion of the contract action needs to be revised to provide relief, exception, or waiver to agencies that cannot identify and segregate the separate funding types.

Response: Subsequent conversations with the Federal agency that submitted the public comment indicate that the issue identified is not a reporting problem for the circumstances identified; the funding was determined to be appropriated.

Comment: One respondent noted that where FAR 4.606(d) addresses actions not subject to the FAR that are required to be reported by other authority, it is not clear whether this applies to FAR covered agencies.

Response: The title of FAR 4.606(d) has been revised to reflect the word ''agencies''.

6. Solicitation Provision and Contract Clause, FAR 4.1202

Comment: One respondent noted that the prescription in FAR 4.1202 for FAR 52.204–7, Central Contractor Registration needs to be revised as it is no longer a clause.

Response: FAR 4.1202 has been revised to read ''provision'' instead of ''clause'' when it references 52.204–7. A search of the FAR identified additional references to 52.204–7 that have been revised in the same manner.

III. Executive Order 12866 and 13563

Executive Orders (E.O.s) 12866 and 13563 direct agencies to assess all costs and benefits of available regulatory alternatives and, if regulation is necessary, to select regulatory approaches that maximize net benefits (including potential economic, environmental, public health and safety effects, distributive impacts, and equity). E.O. 13563 emphasizes the importance of quantifying both costs and benefits, of reducing costs, of harmonizing rules, and of promoting flexibility. This is a significant regulatory action and, therefore, was subject to review under section 6(b) of Executive Order 12866, Regulatory Planning and Review, dated September 30, 1993. This rule is not a major rule under 5 U.S.C. 804.

IV. Regulatory Flexibility Act

The Department of Defense, the General Services Administration, and the National Aeronautics and Space Administration certify that this final rule will not have a significant economic impact on a substantial number of small entities within the meaning of the Regulatory Flexibility Act, 5 U.S.C. 601, *et seq.,* because the FAR amendments affect internal Government procedures, or clarify existing procedures. Additionally, the requirement for the contractor to report any changes to their DUNS number to the contracting officer throughout the life of the contract may be rare, but should it occur, the impact is minimal.

V. Paperwork Reduction Act

The final rule does not contain any information collection requirements that require the approval of the Office of Management and Budget under the Paperwork Reduction Act (44 U.S.C. chapter 35). Existing OMB clearances 9000–0145, Use of Data Universal Numbering System (DUNS) as Primary Contractor Identification, and 9000–0159, Central Contractor Registration, reflect current information collection burdens. This rule removes from existing CCR provision language covered by the cited OMB clearance that, per the FAR Drafting Guide, should be contained in a clause. This action creates no new collection requirement. Accordingly, FAR 1.106 will be amended to reflect two new clauses, 52.204–12 and 52.204–13, containing language instructing contractors to maintain their DUNS number and Central Contractor Registration, respectively.

List of Subjects in 48 CFR Parts 1, 4, 13, 19, 32, and 52

Government procurement.

Dated: November 9, 2012.

Laura Auletta,

Director, Office of Governmentwide Acquisition Policy, Office of Acquisition Policy, Office of Governmentwide Policy.

Therefore, DoD, GSA, and NASA amend 48 CFR parts 1, 4, 13, 19, 32, and 52 as set forth below:

■ 1. The authority citation for 48 CFR parts 1, 4, 13, 19, 32, and 52 is revised to read as follows:

Authority: 40 U.S.C. 121(c); 10 U.S.C. chapter 137; and 51 U.S.C. 20113.

PART 1—FEDERAL ACQUISITION REGULATION SYSTEM

1.106 [Amended]

■ 2. Amend section 1.106 in the table by adding in numerical sequence FAR segments ''52.204–12'' and ''52.204–13'' and their corresponding OMB Control Numbers ''9000–0145'' and ''9000–0159'', respectively.

PART 4—ADMINISTRATIVE MATTERS

■ 3. Revise section 4.603 to read as follows:

4.603 Policy.

(a) In accordance with the Federal Funding Accountability and Transparency Act of 2006 (Pub. L. 109–282), all unclassified Federal award data must be publicly accessible.

(b) Executive agencies shall use FPDS to maintain publicly available information about all unclassified

contract actions exceeding the micro-purchase threshold, and any modifications to those actions that change previously reported contract action report data, regardless of dollar value.

(c) Agencies awarding assisted acquisitions or direct acquisitions must report these actions and identify the Program/Funding Agency and Office Codes from the applicable agency codes maintained by each agency at FPDS. These codes represent the agency and office that has provided the predominant amount of funding for the contract action. For assisted acquisitions, the requesting agency will receive socioeconomic credit for meeting agency small business goals, where applicable. Requesting agencies shall provide the appropriate agency/bureau component code as part of the written interagency agreement between the requesting and servicing agencies (see 17.502–1(b)(1)).

(d) Agencies awarding contract actions with a mix of appropriated and non-appropriated funding shall only report the full appropriated portion of the contract action in FPDS.

■ 4. Amend section 4.604 by revising paragraph (b) to read as follows:

4.604 Responsibilities.

* * * * *

(b)(1) The responsibility for the completion and accuracy of the individual contract action report (CAR) resides with the contracting officer who awarded the contract action. CARs in a draft or error status in FPDS are not considered complete.

(2) The CAR must be confirmed for accuracy by the contracting officer prior to release of the contract award. The CAR must then be completed in FPDS within three business days after contract award.

(3) For any action awarded in accordance with 6.302–2 or pursuant to any of the authorities listed at FAR subpart 18.2, the CAR must be completed in FPDS within 30 days after contract award.

(4) When the contracting office receives written notification that a contractor has changed its size status in accordance with the clause at 52.219–28, Post-Award Small Business Program Representation, the contracting officer must submit a modification contract action report to ensure that the updated size status is entered in FPDS.

* * * * *

■ 5. Amend section 4.605 by—

■ a. Revising paragraph (b);

■ b. Redesignating paragraph (c) as paragraph (d);

■ c. Adding a new paragraph (c); and

■ d. Revising newly redesignated paragraph (d).

■ The revisions and addition read as follows:

4.605 Procedures.

* * * * *

(b) *Data Universal Numbering System.* The contracting officer must identify and report a Data Universal Numbering System (DUNS) number (Contractor Identification Number) for the successful offeror on a contract action. The DUNS number reported must identify the successful offeror's name and address as stated in the offer and resultant contract, and as registered in the Central Contractor Registration (CCR) database in accordance with the provision at 52.204–7, Central Contractor Registration. The contracting officer must ask the offeror to provide its DUNS number by using either the provision at 52.204–6, Data Universal Numbering System Number, the provision at 52.204–7, Central Contractor Registration, or the provision at 52.212–1, Instructions to Offerors—Commercial Items.

(c) *Generic DUNS number.* (1) The use of a generic DUNS number should be limited, and only used in the situations described in paragraph (c)(2) of this section. Use of a generic DUNS number does not supersede the requirements of either provisions 52.204–6 or 52.204–7 (if present in the solicitation) for the contractor to have a DUNS number assigned.

(2) Authorized generic DUNS numbers, maintained by the Integrated Acquisition Environment (IAE) program office (*https://www.acquisition.gov*), may be used to report contracts in lieu of the contractor's actual DUNS number only for—

(i) Contract actions valued at or below $25,000 that are awarded to a contractor that is—

(A) A student;

(B) A dependent of either a veteran, foreign service officer, or military member assigned outside the United States and its outlying areas (as defined in 2.101); or

(C) Located outside the United States and its outlying areas for work to be performed outside the United States and its outlying areas and the contractor does not otherwise have a DUNS number;

(ii) Contracts valued above $25,000 awarded to individuals located outside the United States and its outlying areas for work to be performed outside the United States and its outlying areas; or

(iii) Contracts when specific public identification of the contracted party could endanger the mission, contractor, or recipients of the acquired goods or services. The contracting officer must include a written determination in the contract file of a decision applicable to authority under this paragraph (c)(2)(iii).

(d) *American Recovery and Reinvestment Act actions.* The contracting officer, when entering data in FPDS, shall use the instructions at *https://www.fpds.gov* to identify any action funded in whole or in part by the American Recovery and Reinvestment Act of 2009 (Pub. L. 111–5).

■ 6. Amend section 4.606 by—

■ a. Revising the introductory text of paragraph (b);

■ b. Removing paragraphs (b)(4) through (6);

■ c. Redesignating paragraph (b)(7) as paragraph (b)(4);

■ d. Removing paragraphs (b)(8) and (b)(9);

■ e. Adding paragraphs (c)(6) through (11); and

■ f. Revising paragraph (d) to read as follows:

4.606 Reporting data.

* * * * *

(b) *Reporting other actions.* Agencies may submit actions other than those listed at paragraph (a)(1) of this section only if they are able to be segregated from FAR-based actions and this is approved in writing by the FPDS Program Office. Prior to the commencement of reporting, agencies must contact the FPDS Program Office if they desire to submit any of the following types of activity:

* * * * *

(c) * * *

(6) Contract actions in which the required data would constitute classified information.

(7) Resale activity (*i.e.,* commissary or exchange activity).

(8) Revenue generating arrangements (*i.e.,* concessions).

(9) Training expenditures not issued as orders or contracts.

(10) Interagency agreements other than inter-agency acquisitions required to be reported at 4.606(a)(1).

(11) Letters of obligation used in the A–76 process.

(d) *Agencies not subject to the FAR.* Agencies not subject to the FAR may be required by other authority (*e.g.,* statute, OMB, or internal agency policy) to report certain information to FPDS. Those agencies not subject to the FAR must first receive approval from the FPDS Program Office prior to reporting to FPDS.

■ 6. Amend section 4.607 by—

■ a. Revising the section heading;
■ b. Removing paragraph (a) and redesignating paragraph (b) as paragraph (a); and
■ c. Adding new paragraphs (b) and (c) to read as follows:

4.607 Solicitation provisions and contract clause.

* * * * *

(b) Insert the provision at 52.204–6, Data Universal Numbering System Number, in solicitations that do not contain the provision at 52.204–7, Central Contractor Registration, or meet a condition at 4.605(c)(2).

(c) Insert the clause at 52.204–12, Data Universal Numbering System Number Maintenance, in solicitations and resulting contracts that contain the provision at 52.204–6, Data Universal Numbering System.

4.905 [Amended]

■ 7. Amend section 4.905 by removing from paragraph (a) ''clause'' and adding ''provision'' in its place.

■ 8. Amend section 4.1102 by—
■ a. Revising paragraph (a)(1);
■ b. Removing from paragraph (a)(3)(i) ''10 U.S.C. 2302(7); or'' and adding ''10 U.S.C. 2302(7);'' in its place;
■ c. Redesignating paragraph (a)(3)(ii) as paragraph (a)(3)(iii);
■ d. Adding a new paragraph (a)(3)(ii);
■ e. Redesignating paragraphs (a)(4) through (6) as paragraphs (a)(5) through (7);
■ f. Adding a new paragraph (a)(4);
■ g. Revising newly redesignated paragraph (a)(6);
■ h. Removing from paragraph (b) ''or (a)(4)''; and
■ i. Revising paragraph (c)(1)(ii).

The revisions and additions read as follows:

4.1102 Policy.

(a) * * *

(1) Purchases under the micro-purchase threshold that use a Governmentwide commercial purchase card as both the purchasing and payment mechanism, as opposed to using the purchase card for payment only;

* * * * *

(3) * * *

(ii) Contracting officers located outside the United States and its outlying areas, as defined in 2.101, for work to be performed in support of diplomatic or developmental operations, including those performed in support of foreign assistance programs overseas, in an area that has been designated by the Department of State as a danger pay post (see *http://aoprals.state.gov/Web920/danger_pay_all.asp*); or

* * * * *

(4) Contracts with individuals for performance outside the United States and its outlying areas;

* * * * *

(6) Contract actions at or below $25,000 awarded to foreign vendors for work performed outside the United States, if it is impractical to obtain CCR registration; and

* * * * *

(c)(1) * * *

(ii) If the contractor fails to comply with the requirements of paragraph (c)(1)(i) of the clause at 52.204–13, Central Contractor Registration Maintenance, or fails to perform the agreement at 52.204–13, paragraph (c)(1)(i)(C), and, in the absence of a properly executed novation or change-of-name agreement, the CCR information that shows the contractor to be other than the contractor indicated in the contract will be considered to be incorrect information within the meaning of the ''Suspension of Payment'' paragraph of the EFT clause of the contract.

* * * * *

■ 9. Amend section 4.1103 by—
■ a. Removing paragraph (a)(2)(ii) and redesignating paragraph (a)(2)(iii) as paragraph (a)(2)(ii);
■ b. Removing from paragraph (a)(3) ''clause at 52.204–7, or 52.212–4(t)'' and adding ''provision at 52.204–7, or the clause at 52.212–4'' in its place;
■ c. Removing from paragraph (b)(2) ''officer.'' and adding ''officer; or'' in its place; and
■ d. Adding paragraph (b)(3) to read as follows:

4.1103 Procedures.

* * * * *

(b) * * *

(3) If the contract action is being awarded pursuant to 6.302–2, the contractor must be registered in CCR within 30 days after contract award, or at least three days prior to submission of the first invoice, whichever occurs first.

* * * * *

■ 10. Revise section 4.1105 to read as follows:

4.1105 Solicitation provision and contract clauses.

(a)(1) Except as provided in 4.1102(a), use the provision at 52.204–7, Central Contractor Registration, in solicitations.

(2) If the solicitation is anticipated to be awarded in accordance with 4.1102(a)(5), the contracting officer shall use the provision at 52.204–7, Central Contractor Registration, with its Alternate I.

(b) Insert the clause at 52.204–13, Central Contractor Registration Maintenance, in solicitations that contain the provision at 52.204–7, and resulting contracts.

■ 11. Amend section 4.1202 by revising the introductory text to read as follows:

4.1202 Solicitation provision and contract clause.

Except for commercial item solicitations issued under FAR part 12, insert in solicitations the provision at 52.204–8, Annual Representations and Certifications. The contracting officer shall check the applicable provisions at 52.204–8(c)(2). When the provision at 52.204–7, Central Contract Registration, is included in the solicitation, do not include the following representations and certifications:

* * * * *

4.1402 [Amended]

■ 12. Amend section 4.1402 by removing from paragraph (b) ''FAR 4.605(b)(2)'' and adding ''FAR 4.605(c)(2)'' in its place.

PART 13—SIMPLIFIED ACQUISITION PROCEDURES

13.201 [Amended]

■ 13. Amend section 13.201 by removing from paragraph (d) ''4.1105 and''.

PART 19—SMALL BUSINESS PROGRAMS

■ 14. Amend section 19.708 by revising paragraph (b)(1)(iii) to read as follows:

19.708 Contract clauses.

* * * * *

(b)(1) * * *

(iii) The contract action will not be reported in the Federal Procurement Data System pursuant to 4.606(c)(5) or (c)(6), the contracting officer shall use the clause with its Alternate III.

* * * * *

PART 32—CONTRACT FINANCING

32.1110 [Amended]

■ 15. Amend section 32.1110 by removing from both paragraph (a)(1) introductory text and paragraph (a)(2)(i) the words ''clause at'' and adding ''provision at'' in their places.

PART 52—SOLICITATION PROVISIONS AND CONTRACT CLAUSES

52.204–5 [Amended]

■ 16. Amend section 52.204–5 by removing from the introductory text

''4.607(b)'' and adding ''4.607(a)'' in its place.

■ 17. Amend section 52.204–6 by—

■ a. Revising the section heading, introductory text, and the provision heading;

■ b. Redesignating paragraphs (a) and (b) as paragraphs (b) and (c), respectively; and

■ c. Adding a new paragraph (a) to read as follows:

52.204–6 Data Universal Numbering System Number.

As prescribed in 4.607(b), insert the following provision:

Data Universal Numbering System Number (DEC 2012)

(a) *Definition. Data Universal Numbering System (DUNS) number,* as used in this provision, means the 9-digit number assigned by Dun and Bradstreet, Inc. (D&B) to identify unique business entities, which is used as the identification number for Federal Contractors.

* * * * *

■ 18. Amend section 52.204–7 by—

■ a. Revising the introductory text and the provision heading;

■ b. Removing from the introductory text of paragraph (a) ''this clause'' and adding ''this provision'' in its place;

■ c. In paragraph (a), removing from paragraphs (1) and (2) in the definition for ''Registered in the CCR database'' in the words ''The Contractor'' and adding ''The offeror'' in their places;

■ d. Removing paragraphs (f) and (g);

■ e. Redesignating paragraph (h) as (f);

■ f. Revising the newly redesignated paragraph (f); and

■ g. Adding Alternate I.

The revision and addition read as follows:

52.204–7 Central Contractor Registration.

As prescribed in 4.1105(a)(1), use the following provision.

Central Contractor Registration (DEC 2012)

* * * * *

(f) Offerors may obtain information on registration at *https://www.acquisition.gov.*

(End of provision)

Alternate I (Dec 2012). As prescribed in 4.1105(a)(2), substitute the following paragraph (b)(1) for paragraph (b)(1) of the basic provision:

(b)(1) By submission of an offer, the offeror acknowledges the requirement that a prospective awardee shall be registered in the CCR database prior to award, during performance, and through final payment of any contract, basic agreement, basic ordering agreement, or blanket purchasing agreement resulting from this solicitation. If registration prior to award is not possible, the awardee shall be registered in the CCR database within 30 days after award or before three days prior to submission of the first invoice, whichever occurs first.

■ 19. Add section 52.204–12 to read as follows:

52.204–12 Data Universal Numbering System Number Maintenance.

As prescribed in 4.607(c), insert the following clause:

Data Universal Numbering System Number Maintenance (DEC 2012)

(a) *Definition. Data Universal Numbering System (DUNS) number,* as used in this clause, means the 9-digit number assigned by Dun and Bradstreet, Inc. (D&B) to identify unique business entities, which is used as the identification number for Federal Contractors.

(b) The Contractor shall ensure that the DUNS number is maintained with Dun & Bradstreet throughout the life of the contract. The Contractor shall communicate any change to the DUNS number to the Contracting Officer within 30 days after the change, so an appropriate modification can be issued to update the data on the contract. A change in the DUNS number does not necessarily require a novation be accomplished. Dun & Bradstreet may be contacted—

(1) Via the internet at *http://fedgov.dnb.com/webform* or if the Contractor does not have internet access, it may call Dun and Bradstreet at 1–866–705–5711 if located within the United States; or

(2) If located outside the United States, by contacting the local Dun and Bradstreet office.

(End of clause)

■ 20. Add section 52.204–13 to read as follows:

52.204–13 Central Contractor Registration Maintenance.

As prescribed in 4.1105(b), use the following clause:

Central Contractor Registration Maintenance (DEC 2012)

(a) *Definitions.* As used in this clause—

Central Contractor Registration (CCR) database means the primary Government repository for Contractor information required for the conduct of business with the Government.

Data Universal Numbering System (DUNS) number means the 9-digit number assigned by Dun and Bradstreet, Inc. (D&B) to identify unique business entities, which is used as the identification number for Federal Contractors.

Data Universal Numbering System+4 (DUNS+4) number means the DUNS number assigned by D&B plus a 4-character suffix that may be assigned by a business concern. (D&B has no affiliation with this 4-character suffix.) This 4-character suffix may be assigned at the discretion of the business concern to establish additional CCR records for identifying alternative Electronic Funds Transfer (EFT) accounts (see the FAR at subpart 32.11) for the same concern.

Registered in the CCR database means that—

(1) The Contractor has entered all mandatory information, including the DUNS number or the DUNS+4 number, into the CCR database; and

(2) The Government has validated all mandatory data fields, to include validation of the Taxpayer Identification Number (TIN) with the Internal Revenue Service (IRS), and has marked the record ''Active''. The Contractor will be required to provide consent for TIN validation to the Government as a part of the CCR registration process.

(b) The Contractor is responsible for the accuracy and completeness of the data within the CCR database, and for any liability resulting from the Government's reliance on inaccurate or incomplete data. To remain registered in the CCR database after the initial registration, the Contractor is required to review and update on an annual basis, from the date of initial registration or subsequent updates, its information in the CCR database to ensure it is current, accurate and complete. Updating information in the CCR does not alter the terms and conditions of this contract and is not a substitute for a properly executed contractual document.

(c)(1)(i) If a Contractor has legally changed its business name, *doing business as* name, or division name (whichever is shown on the contract), or has transferred the assets used in performing the contract, but has not completed the necessary requirements regarding novation and change-of-name agreements in subpart 42.12, the Contractor shall provide the responsible Contracting Officer a minimum of one business day's written notification of its intention to—

(A) Change the name in the CCR database;

(B) Comply with the requirements of subpart 42.12 of the FAR; and

(C) Agree in writing to the timeline and procedures specified by the responsible Contracting Officer. The Contractor shall provide with the notification sufficient documentation to support the legally changed name.

(ii) If the Contractor fails to comply with the requirements of paragraph (c)(1)(i) of this clause, or fails to perform the agreement at paragraph (c)(1)(i)(C) of this clause, and, in the absence of a properly executed novation or change-of-name agreement, the CCR information that shows the Contractor to be other than the Contractor indicated in the contract will be considered to be incorrect information within the meaning of the ''Suspension of Payment'' paragraph of the electronic funds transfer (EFT) clause of this contract.

(2) The Contractor shall not change the name or address for EFT payments or manual payments, as appropriate, in the CCR record to reflect an assignee for the purpose of assignment of claims (see FAR subpart 32.8, Assignment of Claims). Assignees shall be separately registered in the CCR database. Information provided to the Contractor's CCR record that indicates payments, including those made by EFT, to an ultimate recipient other than that Contractor will be considered to be incorrect information within the meaning of the ''Suspension of Payment'' paragraph of the EFT clause of this contract.

(3) The Contractor shall ensure that the DUNS number is maintained with Dun & Bradstreet throughout the life of the contract. The Contractor shall communicate any change to the DUNS number to the Contracting Officer within 30 days after the change, so an appropriate modification can be issued to update the data on the contract. A change in the DUNS number does not necessarily require a novation be accomplished. Dun & Bradstreet may be contacted—

(i) Via the internet at *http://fedgov.dnb.com/webform* or if the Contractor does not have internet access, it may call Dun and Bradstreet at 1–866–705–5711 if located within the United States; or

(ii) If located outside the United States, by contacting the local Dun and Bradstreet office.

(d) Contractors may obtain additional information on registration and annual confirmation requirements at *https://www.acquisition.gov.*

(End of clause)

[FR Doc. 2012–27904 Filed 11–19–12; 8:45 am]

BILLING CODE 6820–EP–P

DEPARTMENT OF DEFENSE

GENERAL SERVICES ADMINISTRATION

NATIONAL AERONAUTICS AND SPACE ADMINISTRATION

48 CFR Parts 4 and 17

[FAC 2005–62; FAR Case 2012–010; Item II; Docket 2012–0010, Sequence 01]

RIN 9000–AM36

Federal Acquisition Regulation; Interagency Acquisitions: Compliance by Nondefense Agencies With Defense Procurement Requirements

AGENCY: Department of Defense (DoD), General Services Administration (GSA), and National Aeronautics and Space Administration (NASA).

ACTION: Interim rule.

SUMMARY: DoD, GSA, and NASA are issuing an interim rule amending the Federal Acquisition Regulation (FAR) to add new requirements specific to the acquisition of supplies and services by nondefense agencies on behalf of the DoD. This rule implements a section of the National Defense Authorization Act for Fiscal Year 2008, with later amendments.

DATES: *Effective date:* November 20, 2012.

Comment date: Interested parties should submit written comments to the Regulatory Secretariat on or before January 22, 2013 to be considered in the formation of a final rule.

ADDRESSES: Submit comments identified by FAC 2005–62, FAR Case 2012–010, by any of the following methods:

- *Regulations.gov: http://www.regulations.gov.*

Submit comments via the Federal eRulemaking portal by searching for ''FAR Case 2012–010''. Select the link ''Submit a Comment'' that corresponds with ''FAR Case 2012–010.'' Follow the instructions provided at the ''Submit a Comment'' screen. Please include your name, company name (if any), and ''FAR Case 2012–010'' on your attached document.

- *Fax:* 202–501–4067.
- *Mail:* General Services Administration, Regulatory Secretariat (MCVB), ATTN: Hada Flowers, 1275 First Street NE., 7th Floor, Washington, DC 20417.

Instructions: Please submit comments only and cite FAC 2005–62, FAR Case 2012–010 in all correspondence related to this case. All comments received will be posted without change to *http://www.regulations.gov,* including any personal and/or business confidential information provided.

FOR FURTHER INFORMATION CONTACT: Ms. Patricia Corrigan, Procurement Analyst, at 202–208–1963 for clarification of content. For information pertaining to status or publication schedules, contact the Regulatory Secretariat at 202–501–4755. Please cite FAC 2005–62, FAR Case 2012–010.

SUPPLEMENTARY INFORMATION:

I. Background

DoD, GSA, and NASA are publishing this interim rule amending the FAR to implement the requirements of section 801 of the National Defense Authorization Act (NDAA) for Fiscal Year (FY) 2008 (Pub. L. 110–181), as amended, (10 U.S.C. 2304 note).

Section 801 of the NDAA for FY 2008, titled ''Internal Controls for Procurement on Behalf of the Department of Defense by Certain Nondefense Agencies,'' defines in general terms the ''procurement policies, procedures, and internal controls'' that constitute compliance with defense procurement requirements by a nondefense agency when it procures supplies and services on behalf of the DoD. Section 801(b) states, in part, that unless waived, a DoD acquisition official may place an order, make a purchase, or otherwise procure property or services for DoD in excess of the simplified acquisition threshold through a nondefense agency only if the nondefense agency conducting the acquisition on DoD's behalf has certified that it will comply with defense procurement requirements for that fiscal year.

Section 804 of the Duncan Hunter NDAA for FY 2009 (Pub. L. 110–417) amended the list of covered nondefense agencies established in previous NDAAs, and established deadlines for reviews of covered nondefense agencies. (The term ''covered nondefense agency'' is included in the definition of nondefense agencies of section 801 of the NDAA for FY 2008.)

Section 806 of the NDAA for FY 2010 (Pub. L. 111–84), titled ''Treatment of Nondefense Agency Procurements Under Joint Programs with Intelligence Community,'' amended section 801(b) of the NDAA for FY 2008 by authorizing exclusions from section 801 internal control limitations for contracts entered into under joint programs for DoD and non-DoD elements of the intelligence community.

Section 817 of the NDAA for FY 2012 (Pub. L. 112–81), titled ''Compliance with Defense Procurement Requirements for Purposes of Internal Controls of Nondefense Agencies for Procurements of Behalf of the Department of Defense,'' amended section 801(d) of the NDAA for FY 2008 (10 U.S.C. 2304 note) to provide clarifying language that identifies the types of laws and regulations with which nondefense departments and agencies must comply when procuring supplies and services on behalf of DoD. Specifically, section 817 clarifies that the nondefense agency certification of ''compliance with defense procurement requirements'' for a given fiscal year means compliance with (1) the FAR and other laws and regulations that apply to procurements of property and services by Federal agencies, and (2) laws and regulations (including DoD financial management regulations) that apply to procurements of property and services made by DoD through other Federal agencies.

This interim rule makes the following changes:

- Clarifies FAR 4.603(c) regarding the allocation of socioeconomic credit to the requesting agency for assisted acquisitions.
- Adds to FAR 17.500(a) a cross-reference to the new FAR subpart 17.7 for additional requirements for nondefense agencies when acquiring supplies and services on behalf of DoD;
- Adds to FAR 17.502–1(b)(1)(i) a requirement for written confirmation by the requesting agency to the servicing agency in the event there are no agency unique requirements beyond the FAR that apply to an assisted acquisition.

• Cross-references new FAR subpart 17.7, Interagency Acquisitions: Acquisitions by Nondefense Agencies on Behalf of the Department of Defense, at 17.502–1(b)(1)(i) related to assisted acquisitions.

• Creates a new FAR subpart FAR 17.7 applicable to the acquisition of supplies and services by nondefense agencies on behalf of DoD.

• Creates a new FAR section 17.700 identifying the scope of the subpart.

• Creates a new FAR section 17.701 providing definitions specific to subpart 17.7.

• Creates a new FAR section 17.702 establishing the subpart's applicability to all acquisitions made by nondefense agencies on behalf of DoD except for contracts for joint projects with DoD entered into by a nondefense agency that is an element of the intelligence community.

• Creates a new FAR section 17.703, which establishes the policy related to internal controls and compliance certification under which nondefense agencies may procure supplies and services on behalf of DoD and identifies DoD acquisition official responsibilities when making acquisitions on behalf of DoD.

II. Executive Orders 12866 and 13563

Executive Orders (E.O.s) 12866 and 13563 direct agencies to assess all costs and benefits of available regulatory alternatives and, if regulation is necessary, to select regulatory approaches that maximize net benefits (including potential economic, environmental, public health and safety effects, distributive impacts, and equity). E.O. 13563 emphasizes the importance of quantifying both costs and benefits, of reducing costs, of harmonizing rules, and of promoting flexibility.

This is not a significant regulatory action and, therefore, was not subject to review under Section 6(b) of E.O. 12866, Regulatory Planning and Review, dated September 30, 1993. This rule is not a major rule under 5 U.S.C. 804.

III. Regulatory Flexibility Act

DoD, GSA, and NASA do not expect this rule to have a significant economic impact on a substantial number of small entities within the meaning of the Regulatory Flexibility Act 5 U.S.C. 601, *et seq.* Nevertheless, an Initial Regulatory Flexibility Analysis (IRFA) has been prepared and is summarized as follows.

Section 801 of the NDAA for FY 2008 (Pub. L. 110–181), section 806 of the NDAA for FY 2010 (Pub. L. 111–84), and section 817 of the NDAA for FY 2012 (Pub. L. 112–81) address requirements specific to the acquisition of supplies and services by nondefense agencies on behalf of DoD, and are, therefore, internal to the Government. However, this case also adds a clarification at FAR 4.603(c), restating existing Office of Federal Procurement Policy (OFPP) and Federal Procurement Data System (FPDS) policy regarding the allocation of socioeconomic credit for interagency acquisitions. Although DoD, GSA, and NASA do not expect the clarification to have a direct economic impact on a substantial number of small entities, there is the possibility that the regulatory clarification may improve the accuracy of FPDS data submissions related to the allocation of socioeconomic credit to agencies for contracts and orders awarded to a substantial number of small entities. Improved data accuracy can have a positive impact on agencies' annual small business goals.

The Regulatory Secretariat has submitted a copy of the IRFA to the Chief Counsel for Advocacy of the Small Business Administration. A copy of the IRFA may be obtained from the Regulatory Secretariat. DoD, GSA, and NASA invite comments from small business concerns and other interested parties on the expected impact of this rule on small entities.

DoD, GSA, and NASA will also consider comments from small entities concerning the existing regulations in subparts affected by this rule consistent with 5 U.S.C. 610. Interested parties must submit such comments separately and should cite 5 U.S.C. 610 (FAC 2005–62, FAR Case 2012–010) in correspondence.

IV. Paperwork Reduction Act

The interim rule does not contain any information collection requirements that require the approval of the Office of Management and Budget under the Paperwork Reduction Act (44 U.S.C. Chapter 35).

V. Determination To Issue an Interim Rule

Pursuant to the Office of Federal Procurement Policy (OFPP) Reauthorization Act, the Secretary of Defense, the Administrator of General Services, and the Administrator of NASA have determined that urgent and compelling reasons exist to promulgate this interim rule without prior opportunity for public comment. This action is necessary because the NDAA for FY 2012 (Pub. L. 112–81) was enacted on December 31, 2011, and was effective upon enactment. Recognizing this, the FAR Principals opened FAR Case 2012–010 on January 19, 2012. Section 817 of the NDAA for FY 2012 amended section 801(d) of the NDAA for FY 2008 (10 U.S.C. 2304 note) to provide necessary clarifying language that identifies the types of laws and regulations with which nondefense departments and agencies must comply when procuring supplies and services on behalf of DoD. Specifically, section 817 clarifies that the nondefense agency certification of ''compliance with defense procurement requirements'' for a given fiscal year means compliance with (1) the FAR and other laws and regulations that apply to procurements of property and services by Federal agencies, and (2) laws and regulations (including DoD financial management regulations) that apply to procurements of property and services made by DoD through other Federal agencies. If this rule, which also informs nondefense agencies regarding their responsibilities when buying on behalf of DoD, is not implemented as an interim rule, it will negatively impact the accuracy and completeness of nondefense agency certifications for fiscal year 2013.

Every effort has been made to process this FAR requirement in an expeditious manner. Processing this rule as an interim rule, with an immediate effective date, will ensure that nondefense agencies conducting acquisitions on behalf of DoD are fully informed of DoD expectations and their responsibilities when nondefense agency senior management completes the statutorily-mandated certifications for fiscal year 2013. This requirement does not directly impact the public and is purely an administrative FAR change that affects Government agencies that conduct acquisitions on behalf of DoD.

However, pursuant to 41 U.S.C. 1707 and FAR 1.501–3(b), DoD, GSA, and NASA will consider public comments received in response to this interim rule in the formation of the final rule.

List of Subjects in 48 CFR Parts 4 and 17

Government procurement.

Dated: November 9, 2012.

Laura Auletta,

Director, Office of Governmentwide Acquisition Policy, Office of Acquisition Policy, Office of Governmentwide Policy.

Therefore, DoD, GSA, and NASA amend 48 CFR parts 4 and 17 as set forth below:

■ 1. The authority citation for 48 CFR parts 4 and 17 is revised to read as follows:

Authority: 40 U.S.C. 121(c); 10 U.S.C. chapter 137; and 51 U.S.C. 20113.

PART 4—ADMINISTRATIVE MATTERS

■ 2. Amend section 4.603 by adding two sentences to the end of paragraph (c) to read as follows:

4.603 Policy.

* * * * *

(c) * * * For assisted acquisitions, the requesting agency will receive socioeconomic credit for meeting agency small business goals, where applicable. Requesting agencies shall provide the appropriate agency/bureau component code as part of the written interagency agreement between the requesting and servicing agencies (see 17.502–1(b)(1)).

* * * * *

PART 17—SPECIAL CONTRACTING METHODS

■ 3. Amend section 17.500 by adding a new sentence to the end of paragraph (a) to read as follows:

17.500 Scope of subpart.

(a) * * * In addition to complying with the interagency acquisition policy and procedures in this subpart, nondefense agencies acquiring supplies and services on behalf of the Department of Defense shall also comply with the policy and procedures at subpart 17.7.

* * * * *

■ 4. Amend section 17.502–1 by revising paragraph (b)(1)(i) to read as follows:

17.502–1 General.

* * * * *

(b) * * *

(1) * * *

(i) Prior to the issuance of a solicitation, the servicing agency and the requesting agency shall both sign a written interagency agreement that establishes the general terms and conditions governing the relationship between the parties, including roles and responsibilities for acquisition planning, contract execution, and administration and management of the contract(s) or order(s). The requesting agency shall provide to the servicing agency any unique terms, conditions, and applicable agency-specific statutes, regulations, directives, and other applicable requirements for incorporation into the order or contract. In the event there are no agency unique requirements beyond the FAR, the requesting agency shall so inform the servicing agency contracting officer in writing. For acquisitions on behalf of the Department of Defense, also see subpart 17.7. For patent rights, see 27.304–2. In preparing interagency agreements to support assisted acquisitions, agencies should review the Office of Federal Procurement Policy guidance, Interagency Acquisitions, available at *http://www.whitehouse.gov/omb/assets/procurement/iac_revised.pdf.*

* * * * *

■ 5. Add Subpart 17.7 to read as follows:

Subpart 17.7—Interagency Acquisitions: Acquisitions by Nondefense Agencies on Behalf of the Department of Defense

Sec.
17.700 Scope of subpart.
17.701 Definitions.
17.702 Applicability.
17.703 Policy.

Subpart 17.7—Interagency Acquisitions: Acquisitions by Nondefense Agencies on Behalf of the Department of Defense

17.700 Scope of subpart.

(a) Compliance with this subpart is in addition to the policies and procedures for interagency acquisitions set forth in subpart 17.5. This subpart prescribes policies and procedures specific to acquisitions of supplies and services by nondefense agencies on behalf of the Department of Defense (DoD).

(b) This subpart implements Public Law 110–181, section 801, as amended (10 U.S.C. 2304 Note).

17.701 Definitions.

As used in this subpart—

Department of Defense (DoD) acquisition official means—

(1) A DoD contracting officer; or

(2) Any other DoD official authorized to approve a direct acquisition or an assisted acquisition on behalf of DoD.

Nondefense agency means any department or agency of the Federal Government other than the Department of Defense.

Nondefense agency that is an element of the intelligence community means the agencies identified in 50 U.S.C. 401a(4), which include the—

(1) Office of the Director of National Intelligence;

(2) Central Intelligence Agency;

(3) Intelligence elements of the Federal Bureau of Investigation, Department of Energy, and Drug Enforcement Agency;

(4) Bureau of Intelligence and Research of the Department of State;

(5) Office of Intelligence and Analysis of the Department of the Treasury;

(6) The Office of Intelligence and Analysis of the Department of Homeland Security and the Office of Intelligence of the Coast Guard; and

(7) Such other elements of any department or agency as have been designated by the President, or designated jointly by the Director of National Intelligence and the head of the department or agency concerned, as an element of the intelligence community.

17.702 Applicability.

This subpart applies to all acquisitions made by nondefense agencies on behalf of DoD. It does not apply to contracts entered into by a nondefense agency that is an element of the intelligence community for the performance of a joint program conducted to meet the needs of DoD and the nondefense agency.

17.703 Policy.

(a) A DoD acquisition official may request a nondefense agency to conduct an acquisition on behalf of DoD in excess of the simplified acquisition threshold *only if* the head of the nondefense agency conducting the acquisition on DoD's behalf has certified that the agency will comply with defense procurement requirements for that fiscal year except when waived in accordance with paragraph (e) of this section.

(b) A nondefense agency is compliant with defense procurement requirements if the procurement policies, procedures, and internal controls of the nondefense agency applicable to the procurement of supplies and services on behalf of DoD, and the manner in which they are administered, are adequate to ensure the compliance of the nondefense department or agency with—

(1) The Federal Acquisition Regulation and other laws and regulations that apply to procurements of supplies and services by Federal agencies; and

(2) Laws and regulations that apply to procurements of supplies and services made by DoD through other Federal agencies, including DoD financial management regulations, the Defense Federal Acquisition Regulation Supplement (DFARS), and the DFARS Procedures, Guidance, and Information (PGI). (The DFARS and PGIs are accessible at: *http://www.acq.osd.mil/dpap/*).

(c) Within 30 days of the beginning of each fiscal year, submit nondefense agency certifications of compliance to the Director, Defense Procurement and Acquisition Policy, Department of Defense, 3060 Defense Pentagon, Washington DC 20301–3060.

(d) The DoD acquisition official, as defined at 17.701, shall provide to the servicing nondefense agency contracting officer any DoD-unique terms, conditions, other related statutes, regulations, directives, and other applicable requirements for incorporation into the order or contract. In the event there are no DoD-unique

requirements beyond the FAR, the DoD acquisition official shall so inform the servicing nondefense agency contracting officer in writing. Nondefense agency contracting officers are responsible for ensuring support provided in response to DoD's request complies with paragraph (b) of this section.

(e) *Waiver.* The limitation in paragraph (a) of this section shall not apply to the acquisition of supplies and services on behalf of DoD by a nondefense agency during any fiscal year for which the Under Secretary of Defense for Acquisition, Technology, and Logistics has determined in writing that it is necessary in the interest of DoD to acquire supplies and services through the nondefense agency during the fiscal year. The written determination shall identify the acquisition categories to which the waiver applies.

(f) Nondefense agency certifications, waivers, and additional information are available at *http://www.acq.osd.mil/dpap/cpic/cp/interagency_acquisition.html.*

[FR Doc. 2012–27905 Filed 11–19–12; 8:45 am]

BILLING CODE 6820–EP–P

DEPARTMENT OF DEFENSE

GENERAL SERVICES ADMINISTRATION

NATIONAL AERONAUTICS AND SPACE ADMINISTRATION

48 CFR Parts 25 and 52

[FAC 2005–62; FAR Case 2012–027; Item III; Docket 2012–0027, Sequence 01]

RIN 9000–AM43

Federal Acquisition Regulation; Free Trade Agreement—Panama

AGENCIES: Department of Defense (DoD), General Services Administration (GSA), and National Aeronautics and Space Administration (NASA).

ACTION: Interim rule.

SUMMARY: DoD, GSA, and NASA are issuing an interim rule amending the Federal Acquisition Regulation (FAR) to implement the United States—Panama Trade Promotion Agreement. This Trade Promotion Agreement is a free trade agreement that provides for mutually non-discriminatory treatment of eligible products and services from Panama.

DATES: *Effective date:* November 20, 2012.

Comment date: Interested parties should submit written comments to the Regulatory Secretariat on or before January 22, 2013 to be considered in the formulation of a final rule.

ADDRESSES: Submit comments identified by FAC 2005–62, FAR Case 2012–027, by any of the following methods:

- *Regulations.gov: http://www.regulations.gov.* Submit comments via the Federal eRulemaking portal by searching for ''FAR Case 2012–027''. Select the link ''Submit a Comment'' that corresponds with ''FAR Case 2012–027.'' Follow the instructions provided at the ''Submit a Comment'' screen. Please include your name, company name (if any), and ''FAR Case 2012–027'' on your attached document.
- *Fax:* 202–501–4067.
- *Mail:* General Services Administration, Regulatory Secretariat (MVCB), ATTN: Hada Flowers, 1275 First Street NE., 7th Floor, Washington, DC 20417.

Instructions: Please submit comments only and cite FAC 2005–62, FAR Case 2012–027, in all correspondence related to this case. All comments received will be posted without change to *http://www.regulations.gov,* including any personal and/or business confidential information provided.

FOR FURTHER INFORMATION CONTACT: Ms. Cecelia L. Davis, Procurement Analyst, at 202–219–0202, for clarification of content. For information pertaining to status or publication schedules, contact the Regulatory Secretariat at 202–501–4755. Please cite FAC 2005–62, FAR Case 2012–027.

SUPPLEMENTARY INFORMATION:

I. Background

DoD, GSA, and NASA are issuing an interim rule amending FAR part 25 and the corresponding provisions and clauses in part 52 to implement the United States—Panama Trade Promotion Agreement Implementation Act (Pub. L. 112–43) (19 U.S.C. 3805 note).

This Trade Promotion Agreement is designated in the FAR as the Panama Free Trade Agreement (FTA). This FTA provides for—

- Waiver of the applicability of the Buy American statute (41 U.S.C. chapter 83) for some foreign supplies and construction materials from Panama; and
- Applicability of specified procurement procedures designed to ensure fairness in the acquisition of supplies and services (see FAR 25.408).

II. Discussion and Analysis

This interim rule adds Panama to the definition of ''Free Trade Agreement country'' in multiple locations in the FAR.

The Panama FTA covers acquisitions of supplies and services equal to or exceeding $202,000. The threshold for the Panama FTA is $7,777,000 for construction contracts. The Panama FTA threshold for supplies and services is higher than the threshold for supplies and services for most of the FTAs ($77,494), and equals the Bahrain, Morocco, Oman, and Peru FTA thresholds for supplies and services ($202,000). The excluded services for the Panama FTA are the same as for the Bahrain FTA, Dominican Republic—Central American FTA, Colombia FTA, Chile FTA, NAFTA, Oman FTA, and Peru FTA.

III. Executive Order 12866 and 13563

Executive Orders (E.O.s) 12866 and 13563 direct agencies to assess all costs and benefits of available regulatory alternatives and, if regulation is necessary, to select regulatory approaches that maximize net benefits (including potential economic, environmental, public health and safety effects, distributive impacts, and equity). E.O. 13563 emphasizes the importance of quantifying both costs and benefits, of reducing costs, of harmonizing rules, and of promoting flexibility. This is a significant regulatory action and, therefore, was subject to review under section 6(b) of E.O. 12866, Regulatory Planning and Review, dated September 30, 1993. This rule is not a major rule under 5 U.S.C. 804.

IV. Regulatory Flexibility Act

The Department of Defense, the General Services Administration, and the National Aeronautics and Space Administration do not expect this interim rule to have a significant economic impact on a substantial number of small entities within the meaning of the Regulatory Flexibility Act, 5 U.S.C. 601, *et seq.* Although the rule now opens up Government procurement to the goods and services of Panama, DoD, GSA, and NASA do not anticipate any significant economic impact on U.S. small businesses. The Department of Defense only applies the trade agreements to the non-defense items listed at Defense Federal Acquisition Regulation Supplement (DFARS) 225.401–70, and acquisitions that are set aside or provide other form of preference for small businesses are exempt. FAR 19.502–2 states that acquisitions of supplies or services with an anticipated dollar value between $3,000 and $150,000 (with some exceptions) are automatically reserved for small business concerns.

Therefore, an Initial Regulatory Flexibility Analysis has not been performed. DoD, GSA, and NASA invite comments from small business concerns and other interested parties on the expected impact of this rule on small entities.

DoD, GSA, and NASA will also consider comments from small entities concerning the existing regulations in subparts affected by the rule in accordance with 5 U.S.C. 610. Interested parties must submit such comments separately and should cite 5 U.S.C 610 (FAC 2005–62, FAR Case 2012–027), in correspondence.

V. Paperwork Reduction Act

The Paperwork Reduction Act (44 U.S.C. chapter 35) does apply, because the interim rule affects the certification and information collection requirements in the provisions at FAR 52.212–3, 52.225–4, 52.225–6 and 52.225–11 currently approved under the Office of Management and Budget Control Numbers 9000–0136, titled: Commercial Item Acquisition, 9000–0130, titled: Buy American Act—Free Trade Agreements—Israeli Trade Act Certificate, 9000–0025, titled: Trade Agreements Certificate, and 9000–0141, titled: Buy American—Construction, respectively. The impact, however, is negligible because it is just a question of which category offered goods from Panama would be listed under.

VI. Determination To Issue an Interim Rule

A determination has been made under the authority of the Secretary of Defense (DoD), the Administrator of General Services (GSA), and the Administrator of the National Aeronautics and Space Administration (NASA) that urgent and compelling reasons exist to promulgate this interim rule without prior opportunity for public comment. This action is necessary because the effective date of the Free Trade Agreement with Panama is October 31, 2012. This is a reciprocal agreement, approved by Congress and the President of the United States. It is important for the United States Government to honor its new trade obligations to Panama, as Panama in turn honors its new trade obligations to the United States. However, pursuant to 41 U.S.C. 1707 and FAR 1.501–3(b), DoD, GSA, and NASA will consider public comments received in response to this interim rule in the formation of the final rule.

List of Subjects in 48 CFR Parts 25 and 52.

Government procurement.

Dated: November 9, 2012.

Laura Auletta,

Director, Office of Governmentwide Acquisition Policy, Office of Acquisition Policy, Office of Governmentwide Policy.

Therefore, DoD, GSA, and NASA amend 48 CFR parts 25 and 52 as set forth below:

■ 1. The authority citation for 48 CFR parts 25 and 52 is revised to read as follows:

Authority: 40 U.S.C. 121(c); 10 U.S.C. chapter 137; and 51 U.S.C. 20113.

PART 25—FOREIGN ACQUISITION

25.003 [Amended]

■ 2. Amend section 25.003 by removing from both the definition of ''Designated country'' in paragraph (2), and the definition of ''Free Trade Agreement country'' the words ''Oman, Peru,'' and adding ''Oman, Panama, Peru,'' in their place.

■ 3. Amend section 25.400 by revising paragraphs (a)(2)(x) and (a)(2)(xi); and adding paragraph (a)(2)(xii) to read as follows:

§ 25.400 Scope of subpart.

(a) * * *

(2) * * *

(x) Korea FTA (the United States-Korea Free Trade Agreement Implementation Act (Pub. L. 112–41) (19 U.S.C 3805 note));

(xi) Colombia FTA (the United States-Colombia Trade Promotion Agreement Implementation Act (Pub. L. 112–42) (19 U.S.C. 3805 note)); and

(xii) Panama FTA (the United States-Panama Trade Promotion Agreement Implementation Act (Pub. L. 112–43) (19 U.S.C. 3805 note));

* * * * *

§ 25.401 [Amended]

■ 4. Amend section 25.401 by removing from paragraph (b), in the table, in the heading, ''Oman FTA, and Peru FTA'' and adding ''Oman FTA, Panama FTA, and Peru FTA'' in its place.

■ 5. Amend section 25.402 by revising the table in paragraph (b) to read as follows:

§ 25.402 General.

* * * * *

(b) * * *

Trade agreement	Supply contract (equal to or exceeding)	Service contract (equal to or exceeding)	Construction contract (equal to or exceeding)
WTO GPA	$202,000	$202,000	$7,777,000
FTAs:			
Australia FTA	77,494	77,494	7,777,000
Bahrain FTA	202,000	202,000	10,074,262
CAFTA–DR (Costa Rica, Dominican Republic, El Salvador, Guatemala, Honduras, and Nicaragua)	77,494	77,494	7,777,000
Chile FTA	77,494	77,494	7,777,000
Colombia FTA	77,494	77,494	7,777,000
Korea FTA	100,000	100,000	7,777,000
Morocco FTA	202,000	202,000	7,777,000
NAFTA:			
—Canada	25,000	77,494	10,074,262
—Mexico	77,494	77,494	10,074,262
Oman FTA	202,000	202,000	10,074,262
Panama FTA	202,000	202,000	7,777,000
Peru FTA	202,000	202,000	7,777,000
Singapore FTA	77,494	77,494	7,777,000
Israeli Trade Act	50,000	.....	.....

* * * * *

PART 52—SOLICITATION PROVISIONS AND CONTRACT CLAUSES

■ 6. Amend section 52.212–3 by revising the date of the provision; and paragraphs (g)(1)(i), (g)(1)(ii), and (g)(4) to read as follows:

52.212–3 Offeror Representations and Certifications—Commercial Items.

* * * * *

Offeror Representations and Certifications—Commercial Items (NOV 2012)

* * * * *

(g)(1) *Buy American Act—Free Trade Agreements—Israeli Trade Act Certificate.* (Applies only if the clause at FAR 52.225–3, Buy American Act—Free Trade Agreements—Israeli Trade Act, is included in this solicitation.)

(i) The offeror certifies that each end product, except those listed in paragraph (g)(1)(ii) or (g)(1)(iii) of this provision, is a domestic end product and that for other than COTS items, the offeror has considered components of unknown origin to have been mined, produced, or manufactured outside the United States. The terms ''Bahrainian, Moroccan, Omani, Panamanian, or Peruvian end product,'' ''commercially available off-the-shelf (COTS) item,'' ''component,'' ''domestic end product,'' ''end product,'' ''foreign end product,'' ''Free Trade Agreement country,'' ''Free Trade Agreement country end product,'' ''Israeli end product,'' and ''United States'' are defined in the clause of this solicitation entitled ''Buy American Act—Free Trade Agreements—Israeli Trade Act.''

(ii) The offeror certifies that the following supplies are Free Trade Agreement country end products (other than Bahrainian, Moroccan, Omani, Panamanian, or Peruvian end products) or Israeli end products as defined in the clause of this solicitation entitled ''Buy American Act—Free Trade Agreements—Israeli Trade Act'':

Free Trade Agreement Country End Products (Other than Bahrainian, Moroccan, Omani, Panamanian, or Peruvian End Products) or Israeli End Products:

Line Item No.	Country of Origin

[List as necessary]

* * * * *

(g)(4) *Buy American Act—Free Trade Agreements—Israeli Trade Act Certificate, Alternate III.* If Alternate III to the clause at FAR 52.225–3 is included in this solicitation, substitute the following paragraph (g)(1)(ii) for paragraph (g)(1)(ii) of the basic provision:

(g)(1)(ii) The offeror certifies that the following supplies are Free Trade Agreement country end products (other than Bahrainian, Korean, Moroccan, Omani, Panamanian, or Peruvian end products) or Israeli end products as defined in the clause of this solicitation entitled ''Buy American Act—Free Trade Agreements—Israeli Trade Act'':

Free Trade Agreement Country End Products (Other than Bahrainian, Korean, Moroccan, Omani, Panamanian, or Peruvian End Products) or Israeli End Products:

Line Item No.	Country of Origin

[List as necessary]

* * * * *

■ 7. Amend section 52.212–5 by revising the date of the clause and paragraphs (b)(40) and (b)(41) to read as follows:

52.212–5 Contract Terms and Conditions Required to Implement Statutes or Executive Orders—Commercial Items.

* * * * *

Contract Terms and Conditions Required To Implement Statutes or Executive Orders—Commercial Items (NOV 2012)

* * * * *

(b) * * *

(40)(i) 52.225–3, Buy American Act—Free Trade Agreements—Israeli Trade Act (NOV 2012) (41 U.S.C. chapter 83, 19 U.S.C. 3301 note, 19 U.S.C. 2112 note, 19 U.S.C. 3805 note, 19 U.S.C. 4001 note, Pub. L. 103–182, 108–77, 108–78, 108–286, 108–302, 109–53, 109–169, 109–283, 110–138, 112–41, 112–42, and 112–43).

(ii) Alternate I (MAR 2012) of 52.225–3.

(iii) Alternate II (MAR 2012) of 52.225–3.

(iv) Alternate III (NOV 2012) of 52.225–3.

(41) 52.225–5, Trade Agreements (NOV 2012) (19 U.S.C. 2501, *et seq.,* 19 U.S.C. 3301 note).

* * * * *

■ 8. Amend section 52.225–3 by—

■ a. Revising the date of the clause;

■ b. Revising the definitions in paragraph (a) of ''Bahrainian, Moroccan, Omani, or Peruvian end product'' and ''Free Trade Agreement country'';

■ c. Removing from paragraph (c) ''Oman, and Peru'' and ''Omani, or Peruvian'' (twice) and adding ''Oman, Panama, and Peru'' and ''Omani, Panamanian, or Peruvian'' (twice) in their places, respectively; and

■ d. Amending Alternate III by—

■ 1. Revising the introductory text of Alternate III;

■ 2. Revising the introductory paragraph of the definition of ''Bahrainian, Korean, Moroccan, Omani, or Peruvian end product'' and removing from paragraphs (1) and (2) ''Oman, or Peru'' and adding ''Oman, Panama, or Peru'' in its place; and

■ 3. Removing from paragraph (c) ''Oman, and Peru'' and ''Omani, or Peruvian'' (twice) and adding ''Oman, Panama, and Peru'' and ''Omani, Panamanian, or Peruvian'' (twice) in their places, respectively.

The revised text reads as follows:

52.225–3 Buy American Act—Free Trade Agreements—Israeli Trade Act.

* * * * *

Buy American Act—Free Trade Agreement—Israeli Trade Act (NOV 2012)

(a) *Definitions.* As used in this clause—

Bahrainian, Moroccan, Omani, Panamanian, or Peruvian end product means an article that—

(1) Is wholly the growth, product, or manufacture of Bahrain, Morocco, Oman, Panama, or Peru; or

(2) In the case of an article that consists in whole or in part of materials from another country, has been substantially transformed in Bahrain, Morocco, Oman, Panama, or Peru into a new and different article of commerce with a name, character, or use distinct from that of the article or articles from which it was transformed. The term refers to a product offered for purchase under a supply contract, but for purposes of calculating the value of the end product includes services (except transportation services) incidental to the article, provided that the value of those incidental services does not exceed that of the article itself.

* * * * *

Free Trade Agreement country means Australia, Bahrain, Canada, Chile, Colombia, Costa Rica, Dominican Republic, El Salvador, Guatemala, Honduras, Korea (Republic of), Mexico, Morocco, Nicaragua, Oman, Panama, Peru, or Singapore.

* * * * *

Alternate III (NOV 2012). As prescribed in 25.1101(b)(1)(iv), delete the definition of ''Bahrainian, Moroccan, Omani, Panamanian, or Peruvian end product'' and add in its place the following definition of ''Bahrainian, Korean, Moroccan, Omani, Panamanian, or Peruvian end product'' in paragraph (a) of the basic clause; and substitute the following paragraph (c) for paragraph (c) of the basic clause.

Bahrainian, Korean, Moroccan, Omani, Panamanian, or Peruvian end product means an article that—

* * * * *

■ 9. Amend section 52.225–4 by—

■ a. Revising the date of the provision;

■ b. Removing once from paragraph (a) and twice from paragraph (b) ''Omani, or Peruvian'' and adding ''Omani, Panamanian, or Peruvian'' in its place; and

■ c. Revising the date of Alternate III; and removing twice from paragraph (b) ''Omani, or Peruvian'' and adding ''Omani, Panamanian, or Peruvian'' in their places.

The revised text reads as follows:

52.225–4 Buy American Act—Free Trade Agreements—Israeli Trade Act Certificate.

* * * * *

Buy American Act—Free Trade Agreements—Israeli Trade Act Certificate (NOV 2012)

* * * * *

■ 10. Amend section 52.225–5 by—
■ a. Revising the date of the clause;
■ b. Removing from paragraph (a), in the definition of ''Designated country'' in paragraph (2), ''Oman, Peru,'' and adding ''Oman, Panama, Peru,'' in its place.

The revised text reads as follows:

52.225–5 Trade Agreements.

* * * * *

Trade Agreements (NOV 2012)

* * * * *

■ 11. Amend section 52.225–11 by—
■ a. Revising the date of the clause;
■ b. Removing from paragraph (a), in the definition of ''Designated country'' in paragraph (2), ''Oman, Peru,'' and adding ''Oman, Panama, Peru,'' in its place; and

The revised text reads as follows:

52.225–11 Buy American Act—Construction Materials Under Trade Agreements.

* * * * *

Buy American Act—Construction Materials Under Trade Agreements (NOV 2012)

* * * * *

■ 12. Amend section 52.225–23 by—
■ a. Revising the date of the clause; and
■ b. Removing from paragraph (a), in the definition of ''Designated country'' in paragraph (2), ''Oman, Peru,'' and adding ''Oman, Panama, Peru,'' in its place; and removing from the definition of ''Recovery Act designated country'' in paragraph (2) ''Oman, Peru,'' and adding ''Oman, Panama, Peru,'' in its place.

The revised text reads as follows:

52.225–23 Required Use of American Iron, Steel, and Manufactured Goods—Buy American Act—Construction Materials Under Trade Agreements.

* * * * *

Required Use of American Iron, Steel, and Manufactured Goods—Buy American Act—Construction Materials Under Trade Agreements (NOV 2012)

* * * * *

[FR Doc. 2012–27906 Filed 11–19–12; 8:45 am]

BILLING CODE 6820–EP–P

DEPARTMENT OF DEFENSE

GENERAL SERVICES ADMINISTRATION

NATIONAL AERONAUTICS AND SPACE ADMINISTRATION

48 CFR Chapter 1

[Docket FAR 2012–0081, Sequence 7]

Federal Acquisition Regulation; Federal Acquisition Circular 2005–62; Small Entity Compliance Guide

AGENCY: Department of Defense (DoD), General Services Administration (GSA), and National Aeronautics and Space Administration (NASA).

ACTION: Small Entity Compliance Guide.

SUMMARY: This document is issued under the joint authority of DOD, GSA, and NASA. This *Small Entity Compliance Guide* has been prepared in accordance with section 212 of the Small Business Regulatory Enforcement Fairness Act of 1996. It consists of a summary of the rule appearing in Federal Acquisition Circular (FAC) 2005–62, which amends the Federal Acquisition Regulation (FAR). An asterisk (*) next to a rule indicates that a regulatory flexibility analysis has been prepared. Interested parties may obtain further information regarding this rule by referring to FAC 2005–62, which precedes this document. These documents are also available via the Internet at *http://www.regulations.gov.*

DATES: November 20, 2012.

FOR FURTHER INFORMATION CONTACT: For clarification of content, contact the analyst whose name appears in the table below. Please cite FAC 2005–62 and the FAR case number. For information pertaining to status or publication schedules, contact the Regulatory Secretariat at 202–501–4755.

LIST OF RULES IN FAC 2005–62

Item	Subject	FAR case	Analyst
I	Updates to Contract Reporting and Central Contractor Registration	2010–014	Loeb.
II*	Interagency Acquisitions: Compliance by Nondefense Agencies with Defense Procurement Requirements.	2012–010	Corrigan.
III	Free Trade Agreement—Panama	2012–027	Davis.

SUPPLEMENTARY INFORMATION: Summaries for each FAR rule follow. For the actual revisions and/or amendments made by these FAR cases, refer to the specific item numbers and subjects set forth in the documents following these item summaries. FAC 2005–62 amends the FAR as specified below:

Item I—Updates to Contract Reporting and Central Contractor Registration (FAR Case 2010–014)

GSA, DOD, and NASA published a proposed rule in the **Federal Register** at 76 FR 73564 on November 29, 2011 to revise the practice for and limit the use of generic Data Universal Numbering System (DUNS) Numbers, update policies on reporting into the Federal Procurement Data System (FPDS), and revise clauses for Central Contractor Registration (CCR) and DUNS Number reporting. The rule increases transparency by reducing the use of generic DUNs, but may require more small businesses to register in CCR. The rule clarifies that non-appropriated fund awards will generally not be included in FPDS. The rule also clarifies requirements for agencies to submit and review contract action reports in FPDS. This rule uses the existing term ''Central Contractor Registration'' rather than ''System for Award Management,'' because FAR Case 2012–033 will address the terminology update to ''System for Award Management'' throughout the FAR.

Item II—Interagency Acquisitions: Compliance by Nondefense Agencies With Defense Procurement Requirements (FAR Case 2012–010)

This interim rule amends the FAR to implement section 801 of the National Defense Authorization Act for Fiscal Year 2008 (Pub. L. 110–181), as

amended (10 U.S.C. 2304 note). Section 801 requires compliance certifications by non-defense agencies that purchase on behalf of DoD, and clarifies which DoD laws and regulations apply. The agencies must comply with new FAR subpart 17.7, in addition to complying with FAR subpart 17.5. To provide clarification for small business and contracting officers, existing policy for small business goal credit for assisted acquisitions is added to section FAR 4.603(c).

Item III—Free Trade Agreement—Panama (FAR Case 2012–027)

This interim rule implements a new Free Trade Agreement with Panama (see the United States—Panama Trade Promotion Agreement Implementation Act (Pub. L. 112–43) (19 U.S.C. 3805 note)).

This Trade Promotion Agreement is a free trade agreement that provides for mutually non-discriminatory treatment of eligible products and services from Panama. This interim rule is not expected to have a significant economic impact on a substantial number of small entities.

Dated: November 9, 2012.

Laura Auletta,

Director, Office of Governmentwide Acquisition Policy, Office of Acquisition Policy, Office of Governmentwide Policy.

[FR Doc. 2012–27907 Filed 11–19–12; 8:45 am]

BILLING CODE P

FEDERAL REGISTER

Vol. 77 Tuesday,

No. 224 November 20, 2012

Part IV

The President

Proclamation 8905—America Recycles Day, 2012

Federal Register
Vol. 77, No. 224
Tuesday, November 20, 2012

Presidential Documents

Title 3—

The President

Proclamation 8905 of November 15, 2012

America Recycles Day, 2012

By the President of the United States of America

A Proclamation

For 15 years, our country has celebrated America Recycles Day as a time to focus on conserving valuable materials, keeping our communities clean, and protecting our environment. Today, we reflect on the progress we have made toward fulfilling those important goals and rededicate ourselves to building a more sustainable future.

Each year, recycling puts millions of pounds of valuable materials back into use. By diverting old products from the landfill to the factory floor, we take meaningful steps toward a greener economy and help power an entire industry centered on recycling, reuse, and refurbishing. We also reduce or avoid the environmental impacts of using virgin materials.

As many of us prepare to gather with families and friends this Thanksgiving, America Recycles Day offers a chance to highlight another resource that is too often taken for granted: food. Though many Americans lack access to regular, nutritious meals, much of our country's food goes to waste. To put surplus food to better use, the Environmental Protection Agency is partnering with businesses and organizations in the Food Recovery Challenge, which is helping participants support their communities through food donation and protect their bottom line by reducing waste. By consuming carefully and donating what we can, each of us can join in that important work. Food banks and pantries accept wholesome food that meets quality and safety standards, as do many national and local food recovery programs. Through giving to those in need, all Americans can lift up their communities while helping protect the environment we share.

Aldo Leopold once said that conservation is ''a positive exercise of skill and insight, not merely a negative exercise of abstinence and caution.'' With that important lesson in mind, let us commemorate America Recycles Day by taking bold action to preserve our natural resources, strengthen our economy, and protect the bountiful landscapes we have been blessed with.

NOW, THEREFORE, I, BARACK OBAMA, President of the United States of America, by virtue of the authority vested in me by the Constitution and the laws of the United States, do hereby proclaim November 15, 2012, as America Recycles Day. I call upon the people of the United States to observe this day with appropriate programs and activities, and I encourage all Americans to continue their reducing, reusing, and recycling efforts throughout the year.

IN WITNESS WHEREOF, I have hereunto set my hand this fifteenth day of November, in the year of our Lord two thousand twelve, and of the Independence of the United States of America the two hundred and thirty-seventh.

[FR Doc. 2012–28387
Filed 11–19–12; 11:15 am]
Billing code 3295–F3

Reader Aids

Federal Register

Vol. 77, No. 224

Tuesday, November 20, 2012

CUSTOMER SERVICE AND INFORMATION

Federal Register/Code of Federal Regulations	
General Information, indexes and other finding aids	**202–741–6000**
Laws	**741–6000**
Presidential Documents	
Executive orders and proclamations	**741–6000**
The United States Government Manual	**741–6000**
Other Services	
Electronic and on-line services (voice)	**741–6020**
Privacy Act Compilation	**741–6064**
Public Laws Update Service (numbers, dates, etc.)	**741–6043**
TTY for the deaf-and-hard-of-hearing	**741–6086**

ELECTRONIC RESEARCH

World Wide Web

Full text of the daily Federal Register, CFR and other publications is located at: **www.fdsys.gov.**

Federal Register information and research tools, including Public Inspection List, indexes, and links to GPO Access are located at: **www.ofr.gov.**

E-mail

FEDREGTOC-L (Federal Register Table of Contents LISTSERV) is an open e-mail service that provides subscribers with a digital form of the Federal Register Table of Contents. The digital form of the Federal Register Table of Contents includes HTML and PDF links to the full text of each document.

To join or leave, go to **http://listserv.access.gpo.gov** and select *Online mailing list archives, FEDREGTOC-L, Join or leave the list (or change settings);* then follow the instructions.

PENS (Public Law Electronic Notification Service) is an e-mail service that notifies subscribers of recently enacted laws.

To subscribe, go to **http://listserv.gsa.gov/archives/publaws-l.html** and select *Join or leave the list (or change settings);* then follow the instructions.

FEDREGTOC-L and **PENS** are mailing lists only. We cannot respond to specific inquiries.

Reference questions. Send questions and comments about the Federal Register system to: **fedreg.info@nara.gov**

The Federal Register staff cannot interpret specific documents or regulations.

Reminders. Effective January 1, 2009, the Reminders, including Rules Going Into Effect and Comments Due Next Week, no longer appear in the Reader Aids section of the Federal Register. This information can be found online at **http://www.regulations.gov.**

CFR Checklist. Effective January 1, 2009, the CFR Checklist no longer appears in the Federal Register. This information can be found online at **http://bookstore.gpo.gov/.**

FEDERAL REGISTER PAGES AND DATE, NOVEMBER

66067–66148 1
66149–66360 2
66361–66514 5
66515–66702 6
66703–66914 7
66915–67238 8
67239–67532 9
67533–67742 13
67743–68042 14
68043–68678 15
68679–69380 16
69381–69552 19
69553–69732 20

CFR PARTS AFFECTED DURING NOVEMBER

At the end of each month the Office of the Federal Register publishes separately a List of CFR Sections Affected (LSA), which lists parts and sections affected by documents published since the revision date of each title.

3 CFR

Proclamations:
8894 66507
8895 66515
8896 66517
8897 66519
8898 66521
8899 66523
8900 66525
8901 66527
8902 67533
8903 68043
8904 68045
8905 69731

Executive Orders:
13629 66353

Administrative Orders:
Notices:
Notice of November 1, 2012 66359
Notice of November 9, 2012 67741

5 CFR

890 67743

Proposed Rules
532 68073

7 CFR

205 67239
3201 69381
3434 68679

Proposed Rules
1739 68705

12 CFR

19 66529
46 68047
109 66529
204 66361
263 68680
325 69553
615 66362
652 66375
1022 67744
1282 67535

Proposed Rules
1026 66748
1238 66566

14 CFR

25 ..... 67251, 67557
39 ..... 66534, 67254, 67256, 67261, 67263, 67267, 67559, 67561, 67763, 67764, 68050, 68052, 68055, 68057, 68058, 68061, 68063, 69556, 69558
71 ..... 66067, 66068, 66069, 68065, 68067, 68068, 68681, 68682, 68683
97 ..... 66535, 66536
400 67269

Proposed Rules
25 ..... 67308, 67309, 69568, 69569, 69571, 69572, 69573
33 66936
39 ..... 66409, 66411, 66413, 66415, 66417, 66566, 66757, 66760, 66762, 66764, 66767, 66769, 66771, 66772, 67582, 68711, 68714, 69391
71 ..... 67782, 68716
121 67584
135 67584

15 CFR

Proposed Rules
764 66777
766 66777

16 CFR

1223 66703

17 CFR

1 66288
4 66288
5 66288
7 66288
8 66288
15 66288
16 66288
18 66288
21 66288
22 66288
36 66288
38 66288
41 66288
140 66288
145 66288
155 66288
166 66288
240 66220

Proposed Rules
1 67866
3 67866
22 67866
30 67866
140 67866

18 CFR

4 67562
5 67562
16 67562
33 67562
34 67562
35 67562
157 67562
348 67562
375 67562
385 67562
388 67562

Proposed Rules
284 66568

19 CFR

Proposed Rules
360 67593

21 CFR

Proposed Rules
801 69393

26 CFR

1 66915

Proposed Rules
1 66938

29 CFR

1401 66539
1910 68684
1915 68684
1917 68684
1918 68684
1926 ....67270, 68684
4022 68685

Proposed Rules
1910 68717
1915 68717
1917 68717
1918 68717
1926 ....67313, 68717

30 CFR

Proposed Rules
943 66574

31 CFR

552 67276
561 66918

33 CFR

100 ....66713, 67563
117 ....66714, 69562, 69564
165 ....66541, 67563, 67566, 67568, 69388

Proposed Rules
100 66938
110 66942
117 ....67319, 69576
165 68718

34 CFR

280 67572
674 66088
682 66088
685 66088

Proposed Rules
Ch. IV 69579

36 CFR

Proposed Rules
1195 67595

37 CFR

202 66920

Proposed Rules
201 68075
210 68075

38 CFR

9 66069

Proposed Rules
3 66419

39 CFR

20 68069
111 66149

40 CFR

9 66149
52 ....66388, 66398, 66405, 66543, 66545, 66547, 66548, 66715, 66921, 66927, 66929, 67767
85 68070
86 68070
180 ....66715, 66721, 66723, 67282, 67771, 68686, 68692
300 ....66729, 67777
600 68070
721 66149

Proposed Rules
52 ....66421, 66422, 66429, 66780, 66945, 67322, 67596, 67600, 68076, 68087, 68721, 69399, 69409
81 ....67600, 68076, 68087, 69409
98 69585
174 66781
180 66781
300 ....66783, 67783

41 CFR

303 66554

42 CFR

409 67068
410 68892
413 67450
414 68892
415 68892
416 68210
417 67450
419 68210
421 68892
423 68892
424 67068
425 68892
438 66670
441 66670
447 66670
476 68210
478 68210
480 68210
484 67068
486 68892
488 67068
489 67068
495 ....68210, 68892
498 67068

44 CFR

64 ....66733, 68697, 69564
67 ....66555, 66737
206 67285

Proposed Rules
67 ....66165, 66785, 66788, 66790, 66791, 67324, 67325

47 CFR

64 66935
73 66743
76 67290
90 68070

Proposed Rules
2 68721
15 68722
25 67172
95 68721
101 69581

48 CFR

Ch. 1 ....69714, 69726
1 69715
4 ....69715, 69720
13 69715
17 69720
19 69715
25 69723
32 69715
52 ....69715, 69723
252 68699

Proposed Rules
9903 69422

49 CFR

523 68070
531 68070
533 68070
536 68070
537 68070

Proposed Rules
234 68722
385 67613
386 67613
571 69586
1121 66165
1150 66165
1180 66165

50 CFR

17 67302
21 66406
622 ....66744, 67303, 67574, 68071
648 ....66746, 67305, 69567
679 ....66564, 67579, 67580

Proposed Rules
17 67784
424 66946
648 ....66169, 66947, 67624, 68723, 69428
660 ....66577, 67327, 67974

LIST OF PUBLIC LAWS

This is a continuing list of public bills from the current session of Congress which have become Federal laws. It may be used in conjunction with "P L U S" (Public Laws Update Service) on 202–741–6043. This list is also available online at *http://www.archives.gov/federal-register/laws*.

The text of laws is not published in the **Federal Register** but may be ordered in "slip law" (individual pamphlet) form from the Superintendent of Documents, U.S. Government Printing Office, Washington, DC 20402 (phone, 202–512–1808). The text will also be made available on the Internet from GPO's Federal Digital System (FDsys) at *http://www.gpo.gov/fdsys*. Some laws may not yet be available.

S. 3624/P.L. 112–196

Military Commercial Driver's License Act of 2012 (Oct. 19, 2012; 126 Stat. 1459)

Last List October 11, 2012

Public Laws Electronic Notification Service (PENS)

PENS is a free electronic mail notification service of newly enacted public laws. To subscribe, go to *http://listserv.gsa.gov/archives/publaws-l.html*

Note: This service is strictly for E-mail notification of new laws. The text of laws is not available through this service. **PENS** cannot respond to specific inquiries sent to this address.